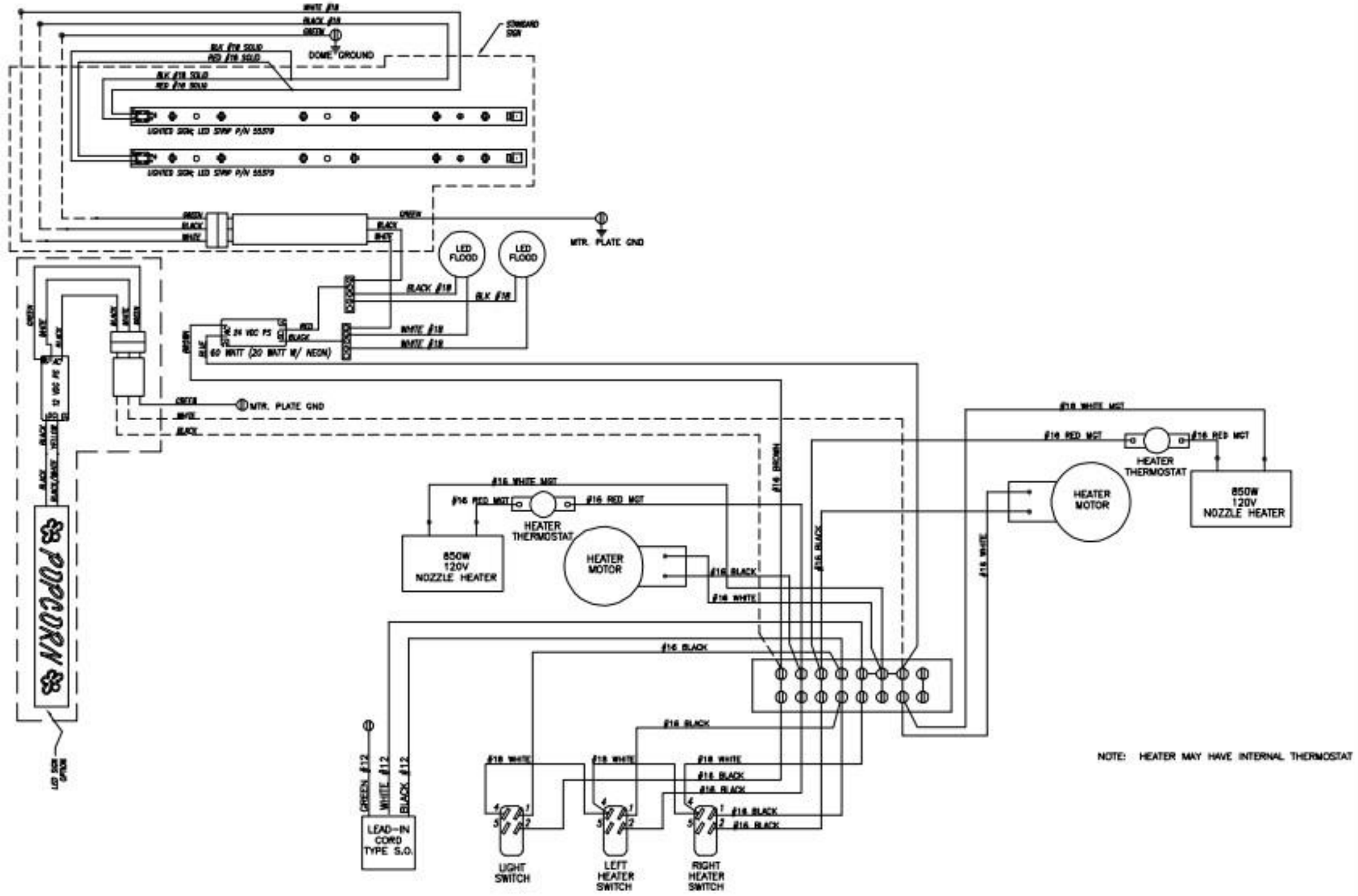
WHITE #18
BLACK #18
GREEN
DOME GROUND
STANDARD SIGN
BLK #18 SOLID
RED #18 SOLID
LIGHTED SIGN; LED STRIP P/N 55519
LIGHTED SIGN; LED STRIP P/N 55519
GREEN
BLACK
WHITE
GREEN
BLACK
WHITE
MTR. PLATE GND
LED FLOOD
LED FLOOD
BLACK #18
BLK #18
WHITE #18
WHITE #18
24 VDC PS
RED
BLACK
60 WATT (20 WATT W/ NEON)
BROWN
BLUE
12 VDC PS
GREEN
WHITE
BLACK
MTR. PLATE GND
WHITE
BLACK
BLACK
YELLOW
BLACK
BLACK/WHITE
POPCORN
LED SIGN STRIP
#16 WHITE MGT
#16 RED MGT
#16 RED MGT
HEATER THERMOSTAT
850W 120V NOZZLE HEATER
HEATER MOTOR
#16 BLACK
#16 WHITE
#16 BROWN
#16 BLACK
#16 WHITE
#16 WHITE MGT
#16 RED MGT
#16 RED MGT
HEATER THERMOSTAT
HEATER MOTOR
850W 120V NOZZLE HEATER
#16 BLACK
#16 BLACK
GREEN #12
WHITE #12
BLACK #12
LEAD-IN CORD TYPE S.O.
#18 WHITE
#18 WHITE
#18 WHITE
#16 BLACK
#16 BLACK
#16 BLACK
#16 BLACK
LIGHT SWITCH
LEFT HEATER SWITCH
RIGHT HEATER SWITCH
NOTE: HEATER MAY HAVE INTERNAL THERMOSTAT

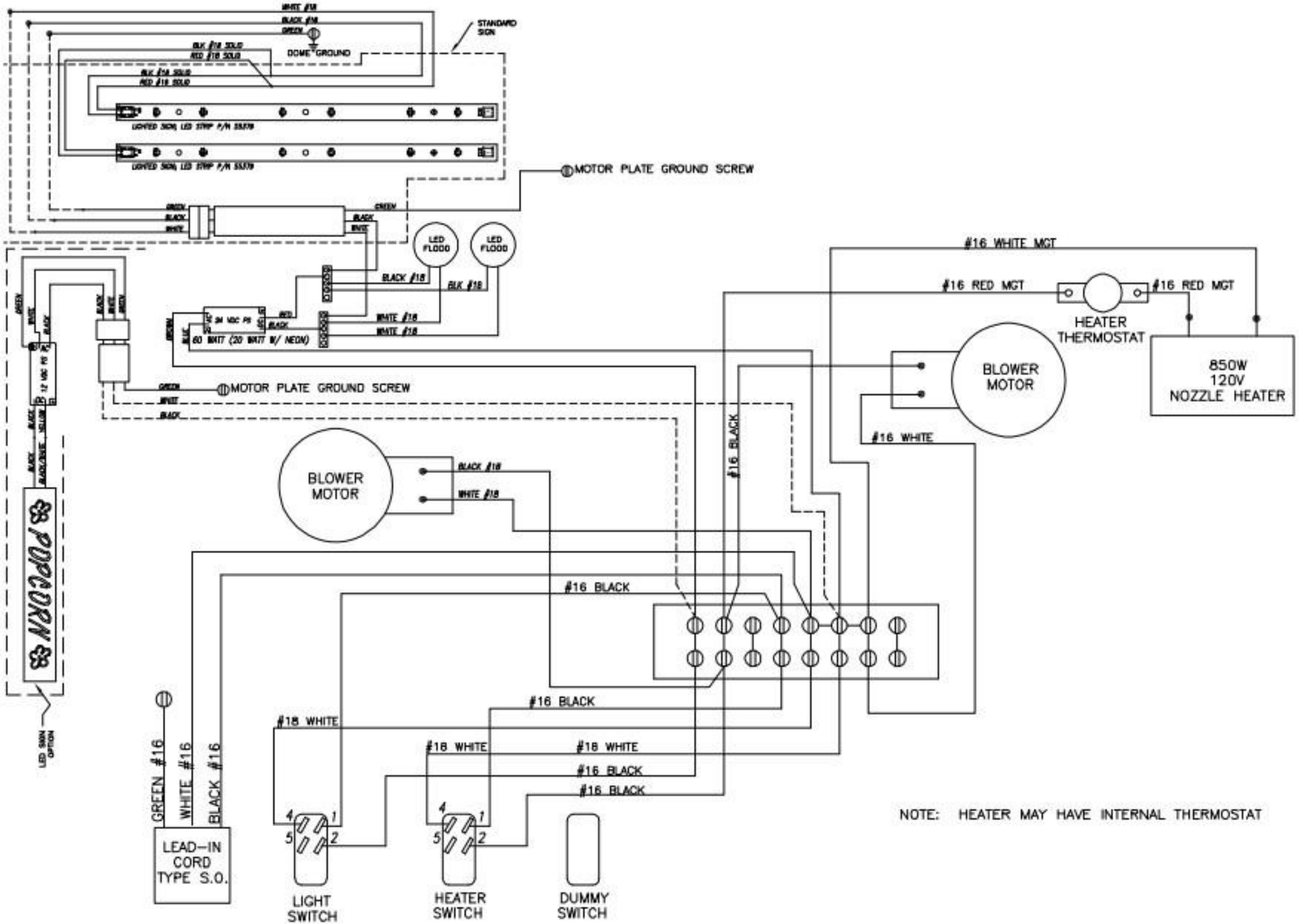
STANDARD SIGN
DOME GROUND
MOTOR PLATE GROUND SCREW
LED FLOOD
LED FLOOD
BLACK #18
BLK #18
WHITE #18
WHITE #18
60 WATT (20 WATT W/ NEON)
MOTOR PLATE GROUND SCREW
#16 WHITE MGT
#16 RED MGT
#16 RED MGT
HEATER THERMOSTAT
BLOWER MOTOR
850W 120V NOZZLE HEATER
#16 WHITE
#16 BLACK
BLOWER MOTOR
BLACK #18
WHITE #18
POPCORN
#16 BLACK
#16 BLACK
#18 WHITE
#18 WHITE
#18 WHITE
#16 BLACK
#16 BLACK
GREEN #16
WHITE #16
BLACK #16
LEAD-IN CORD TYPE S.O.
LIGHT SWITCH
HEATER SWITCH
DUMMY SWITCH
NOTE: HEATER MAY HAVE INTERNAL THERMOSTAT