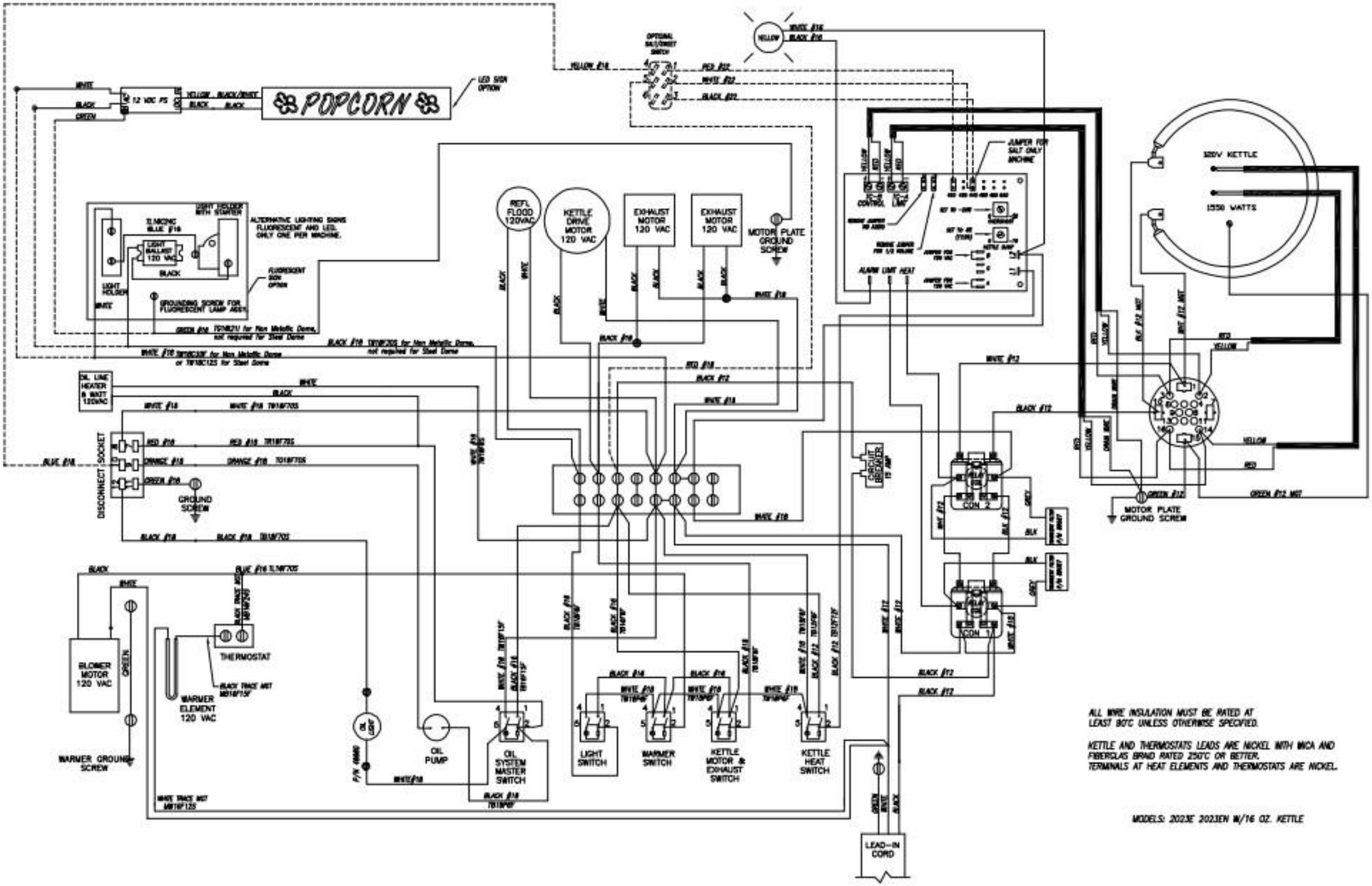

ALL WIRE INSULATION MUST BE RATED AT LEAST 80°C UNLESS OTHERWISE SPECIFIED.

KETTLE AND THERMOSTATS LEADS ARE NICKEL WITH MICA AND FIBERGLAS BRAID RATED 250°C OR BETTER.
TERMINALS AT HEAT ELEMENTS AND THERMOSTATS ARE NICKEL.

MODELS: 2023E 2023EN W/16 OZ. KETTLE

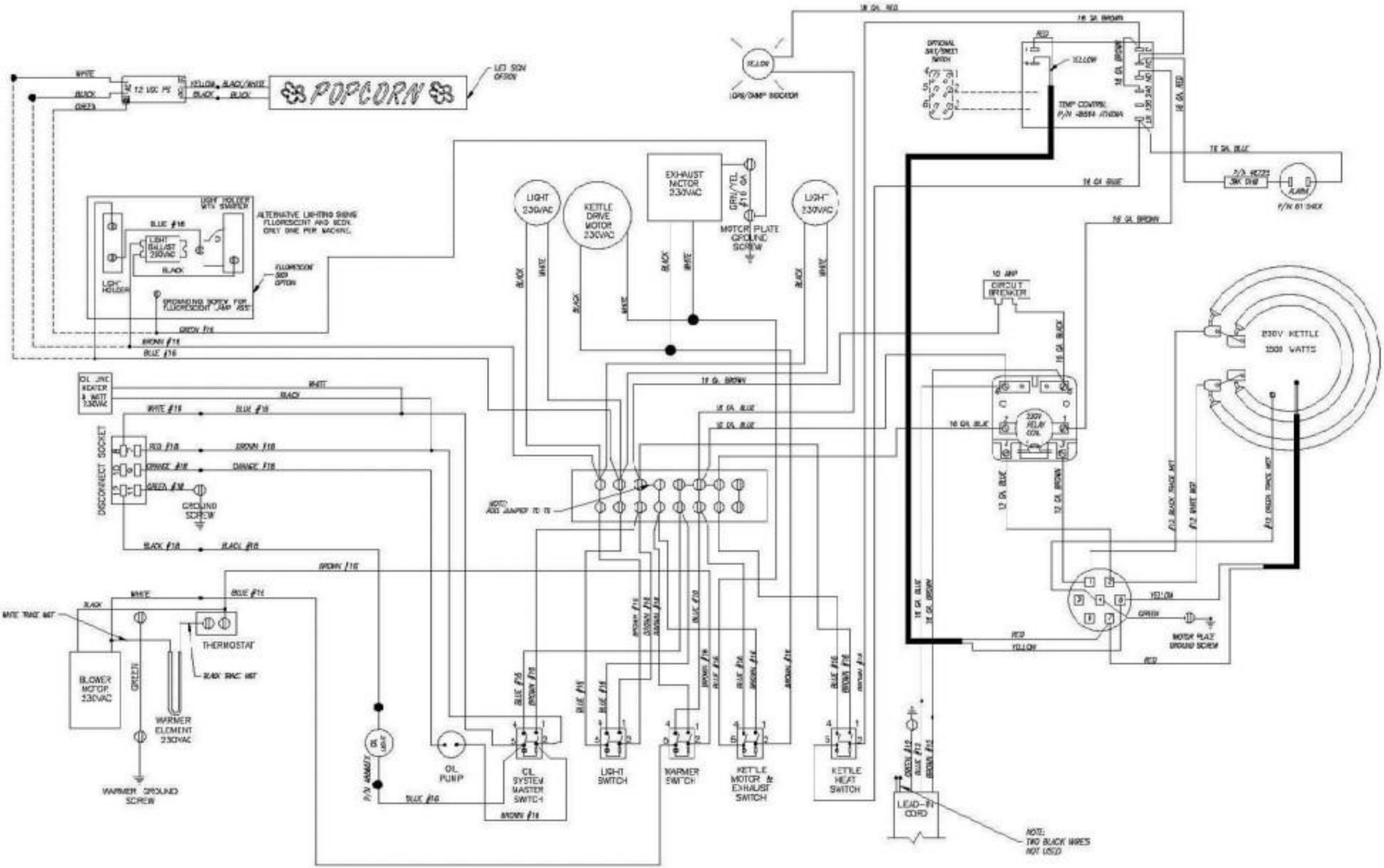
POPCORN
LIGHT 230VAC
KETTLE DRIVE MOTOR 230VAC
EXHAUST MOTOR 230VAC
MOTOR PLATE GROUND SCREW
LIGHT 230VAC
LIGHT BALLAST 230VAC
ALTERNATIVE LIGHTING SIGNS FLUORESCENT AND SCDV. ONLY ONE PER MACHINE.
DISCONNECT SOCKET
GROUND SCREW
THERMOSTAT
BLOWER MOTOR 230VAC
WARMER ELEMENT 230VAC
WARMER GROUND SCREW
OIL PUMP
OIL SYSTEM MASTER SWITCH
LIGHT SWITCH
WARMER SWITCH
KETTLE MOTOR & EXHAUST SWITCH
KETTLE HEAT SWITCH
LEAD-IN CORD
NOTE: TWO BLACK WIRES NOT USED
10 AMP CIRCUIT BREAKER
230V RELAY COIL
230V KETTLE 1500 WATTS
MOTOR PLATE GROUND SCREW
ALARM
LIGHT/LAMP INDICATOR
TEMP CONTROL