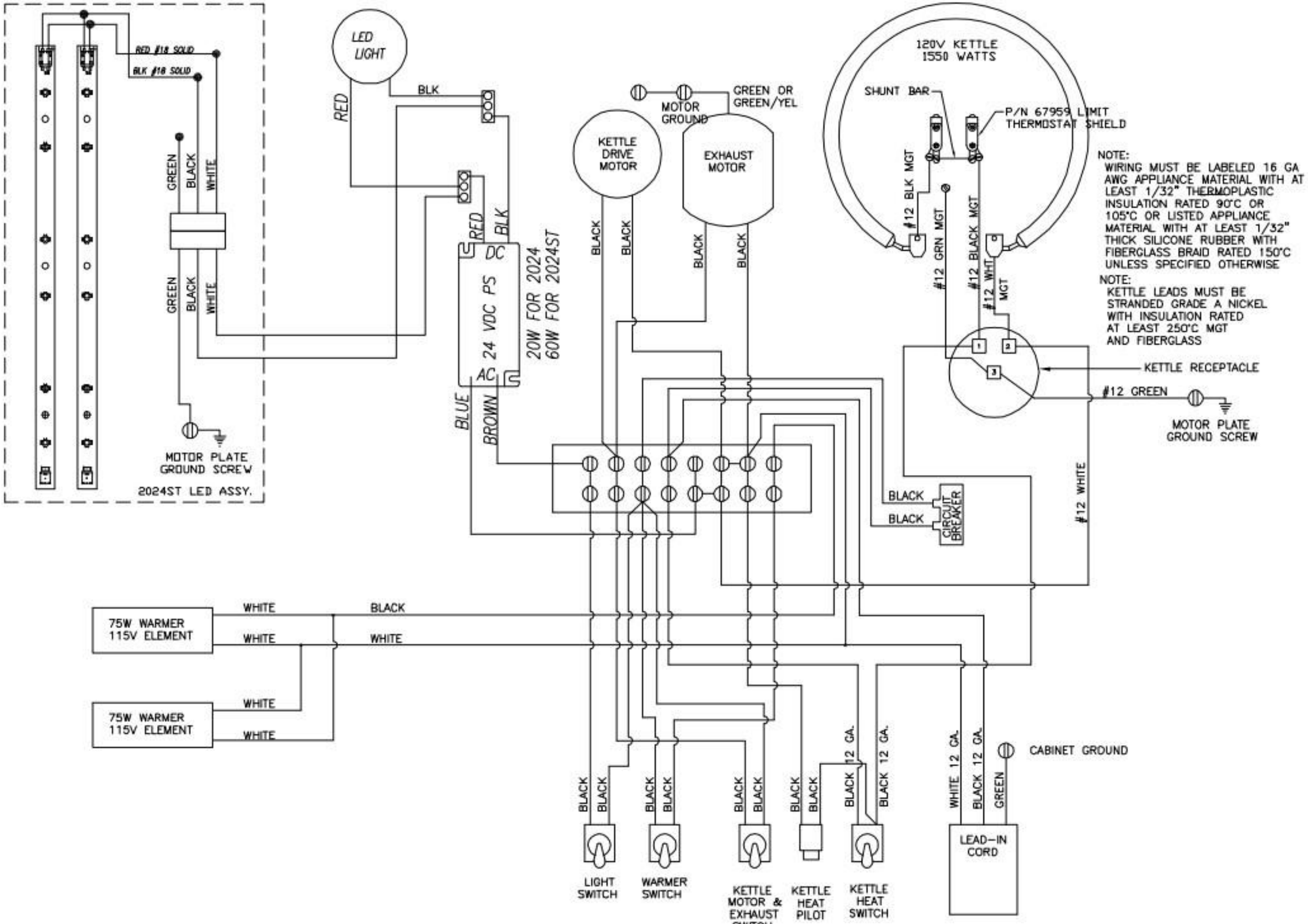
RED #18 SOLID
BLK #18 SOLID
GREEN
BLACK
WHITE
MOTOR PLATE GROUND SCREW
2024ST LED ASSY.
LED LIGHT
RED
BLK
RED
BLK
DC
24 VDC PS
AC
20W FOR 2024
60W FOR 2024ST
BLUE
BROWN
MOTOR GROUND
GREEN OR GREEN/YEL
KETTLE DRIVE MOTOR
EXHAUST MOTOR
BLACK
120V KETTLE
1550 WATTS
SHUNT BAR
P/N 67959 LIMIT THERMOSTAT SHIELD
#12 BLK MGT
#12 GRN MGT
#12 BLACK MGT
#12 WHT MGT
NOTE:
WIRING MUST BE LABELED 16 GA AWG APPLIANCE MATERIAL WITH AT LEAST 1/32" THERMOPLASTIC INSULATION RATED 90°C OR 105°C OR LISTED APPLIANCE MATERIAL WITH AT LEAST 1/32" THICK SILICONE RUBBER WITH FIBERGLASS BRAID RATED 150°C UNLESS SPECIFIED OTHERWISE
NOTE:
KETTLE LEADS MUST BE STRANDED GRADE A NICKEL WITH INSULATION RATED AT LEAST 250°C MGT AND FIBERGLASS
KETTLE RECEPTACLE
#12 GREEN
MOTOR PLATE GROUND SCREW
#12 WHITE
CIRCUIT BREAKER
75W WARMER 115V ELEMENT
WHITE
BLACK
75W WARMER 115V ELEMENT
12 GA.
CABINET GROUND
LIGHT SWITCH
WARMER SWITCH
KETTLE MOTOR & EXHAUST SWITCH
KETTLE HEAT PILOT
KETTLE HEAT SWITCH
LEAD-IN CORD