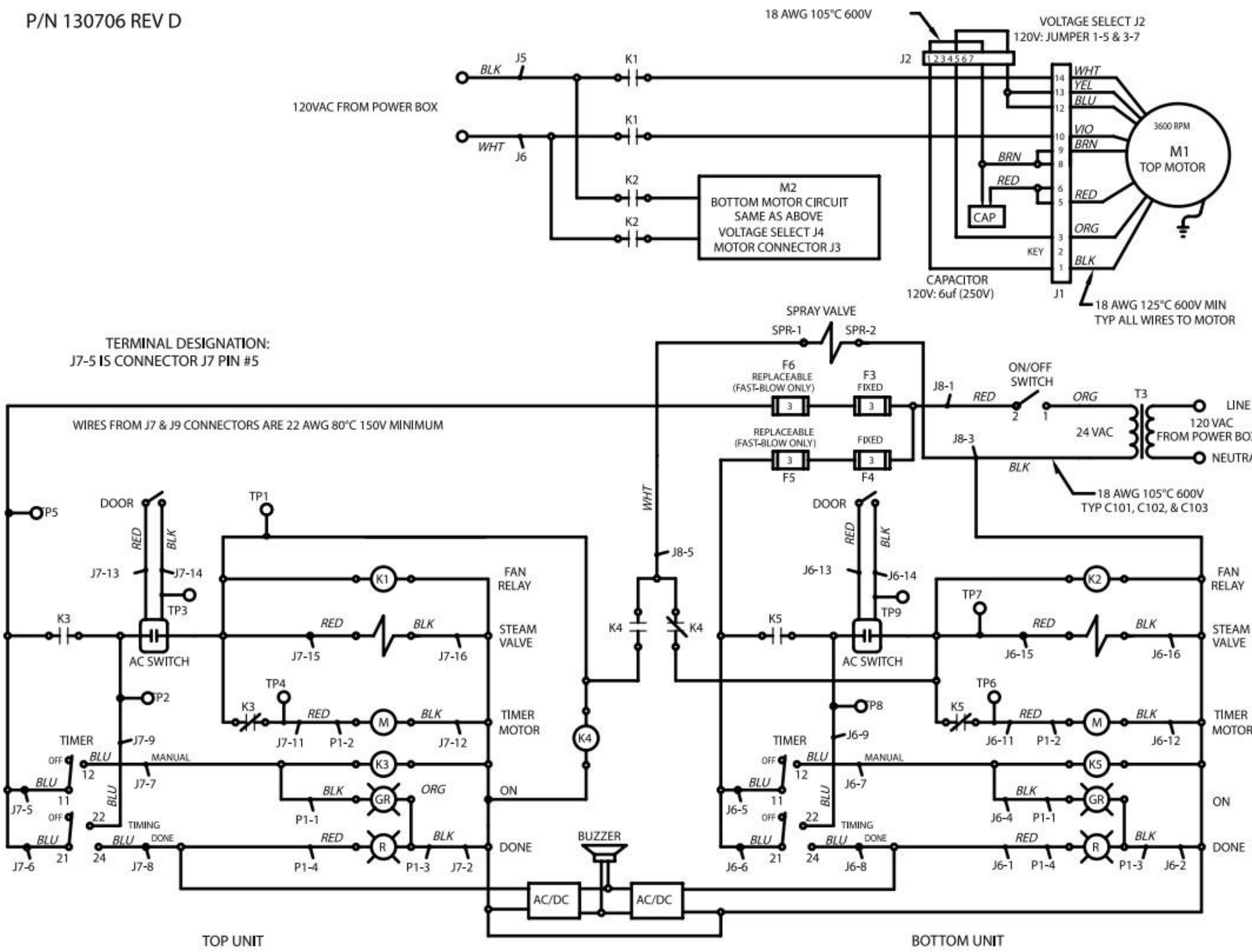P/N 130706 REV D