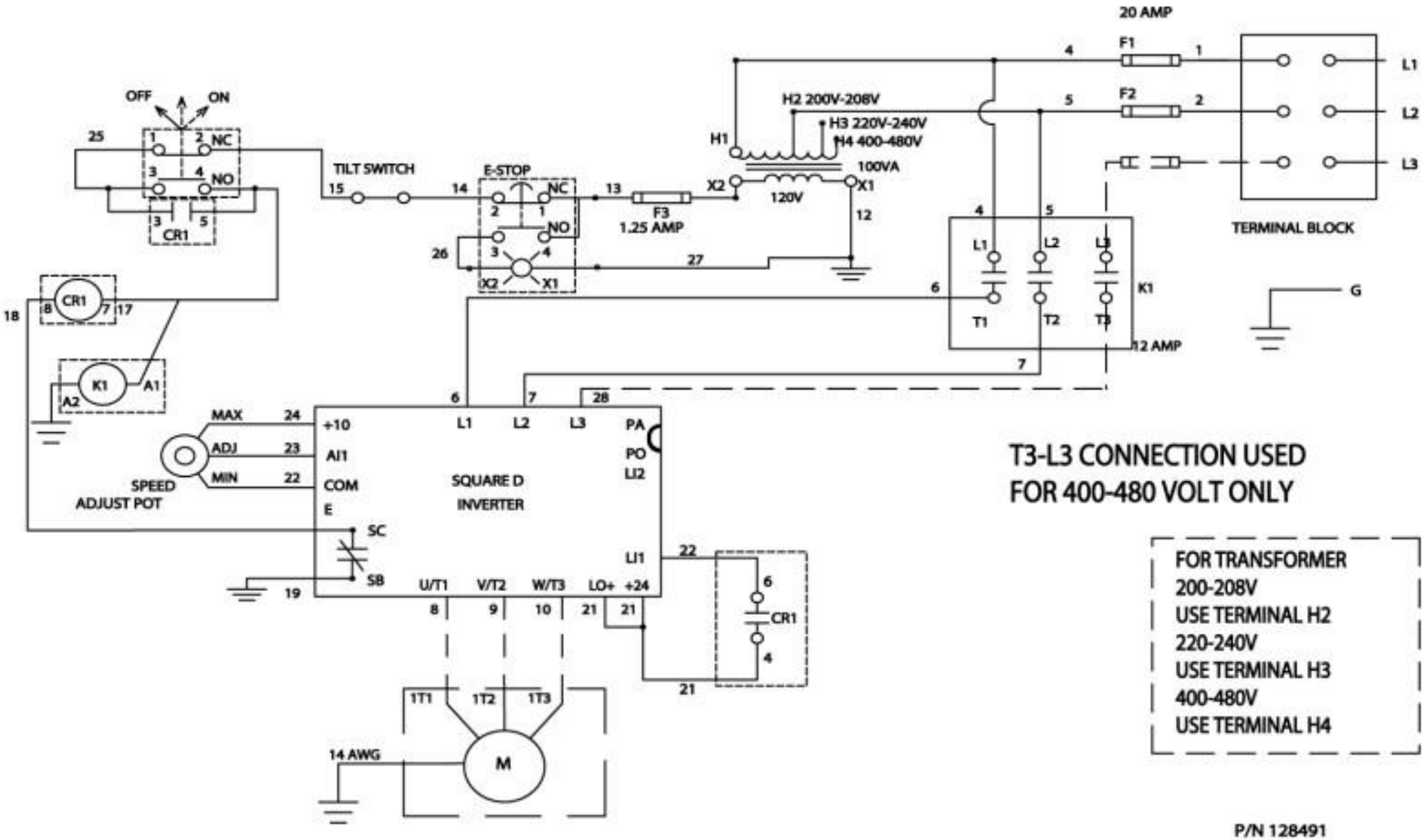
20 AMP
F1
F2
L1
L2
L3
TERMINAL BLOCK
H2 200V-208V
H3 220V-240V
H4 400-480V
H1
100VA
X2
X1
120V
OFF
ON
NC
NO
CR1
TILT SWITCH
E-STOP
F3
1.25 AMP
K1
T1
T2
T3
12 AMP
G
MAX
ADJ
MIN
SPEED
ADJUST POT
+10
AI1
COM
E
SC
SB
SQUARE D
INVERTER
PA
PO
LI2
LI1
U/T1
V/T2
W/T3
LO+
+24
A1
A2
1T1
1T2
1T3
M
14 AWG
T3-L3 CONNECTION USED
FOR 400-480 VOLT ONLY
FOR TRANSFORMER
200-208V
USE TERMINAL H2
220-240V
USE TERMINAL H3
400-480V
USE TERMINAL H4
P/N 128491
REV. B