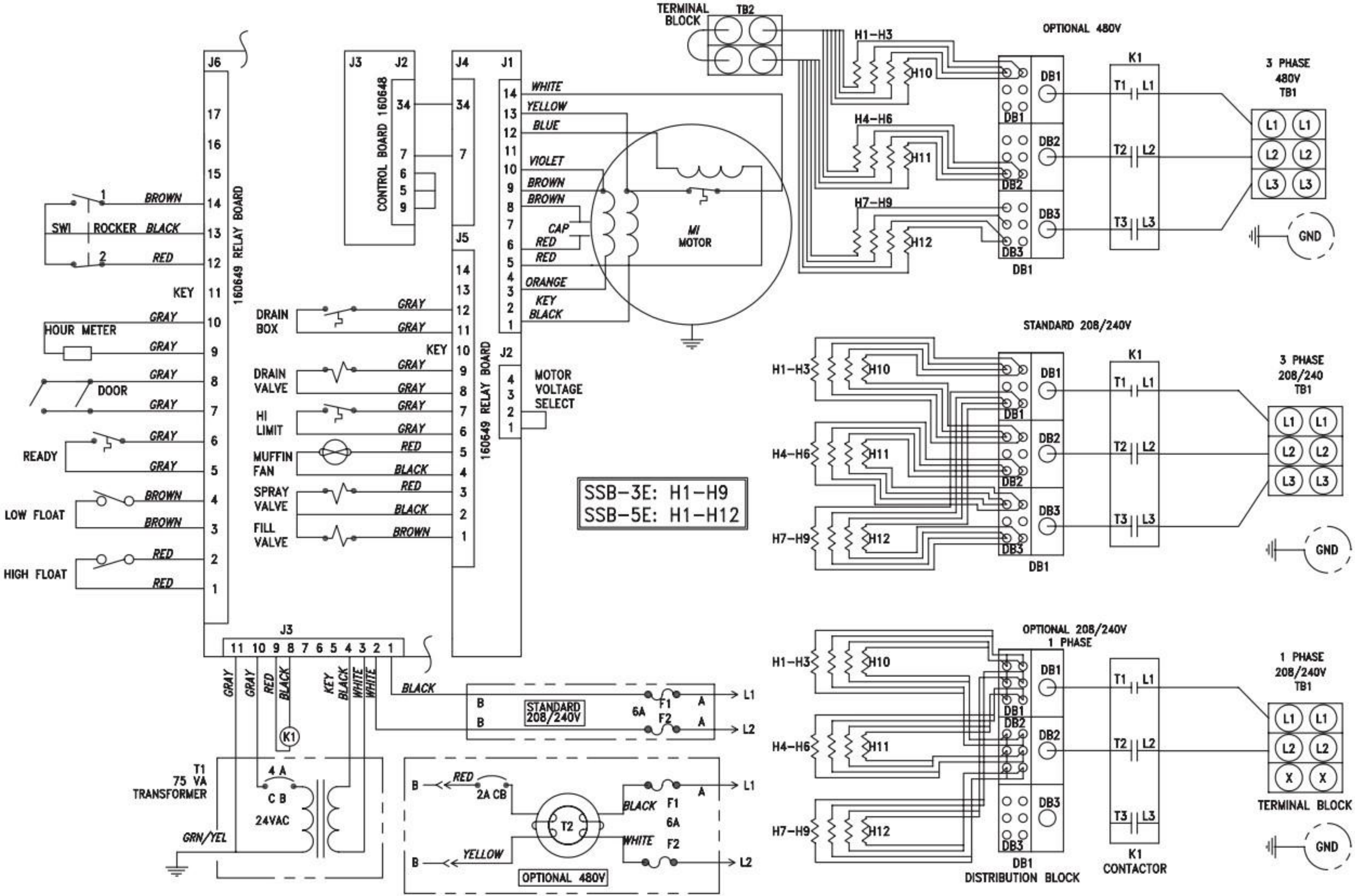
TERMINAL BLOCK
TB2
OPTIONAL 480V
H1–H3
H4–H6
H7–H9
H10
H11
H12
DB1
DB2
DB3
K1
T1
T2
T3
L1
L2
L3
3 PHASE 480V TB1
GND
J6
J3
J2
J4
J1
J5
160649 RELAY BOARD
CONTROL BOARD 160649
WHITE
YELLOW
BLUE
VIOLET
BROWN
CAP
RED
ORANGE
KEY
BLACK
MI MOTOR
SWI
ROCKER
HOUR METER
DOOR
READY
LOW FLOAT
HIGH FLOAT
DRAIN BOX
DRAIN VALVE
HI LIMIT
MUFFIN FAN
SPRAY VALVE
FILL VALVE
GRAY
MOTOR VOLTAGE SELECT
SSB-3E: H1-H9
SSB-5E: H1-H12
STANDARD 208/240V
3 PHASE 208/240 TB1
OPTIONAL 208/240V 1 PHASE
1 PHASE 208/240V TB1
TERMINAL BLOCK
DB1 DISTRIBUTION BLOCK
K1 CONTACTOR
STANDARD 208/240V
6A
F1
F2
A
B
T1 75 VA TRANSFORMER
4 A
C B
24VAC
GRN/YEL
2A CB
T2
OPTIONAL 480V

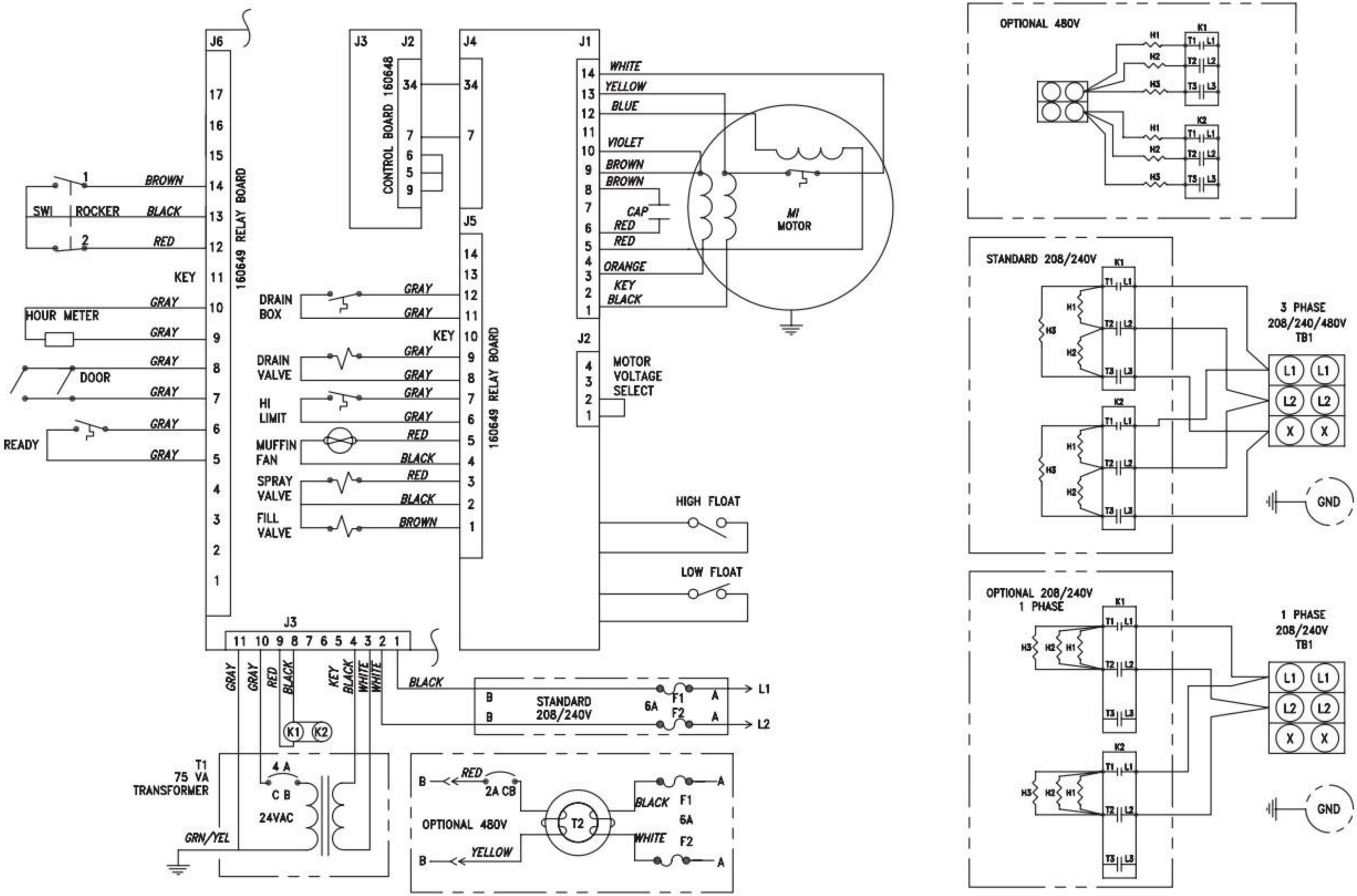
J6
160649 RELAY BOARD
SW1 ROCKER
BROWN
BLACK
RED
KEY
HOUR METER
GRAY
DOOR
READY
J3
J2
CONTROL BOARD 160648
J4
J5
DRAIN BOX
DRAIN VALVE
HI LIMIT
MUFFIN FAN
SPRAY VALVE
FILL VALVE
J1
WHITE
YELLOW
VIOLET
CAP
ORANGE
M1 MOTOR
J2
MOTOR VOLTAGE SELECT
HIGH FLOAT
LOW FLOAT
OPTIONAL 480V
K1
K2
H1
H2
H3
T1
T2
T3
L1
L2
L3
STANDARD 208/240V
3 PHASE 208/240/480V TB1
L1
L2
X
GND
OPTIONAL 208/240V 1 PHASE
1 PHASE 208/240V TB1
J3
11 10 9 8 7 6 5 4 3 2 1
GRAY
GRAY
RED
BLACK
KEY
BLACK
WHITE
WHITE
BLACK
STANDARD 208/240V
6A
F1
F2
A
B
L1
L2
T1 75 VA TRANSFORMER
4 A
C B
24VAC
GRN/YEL
OPTIONAL 480V
RED
2A CB
YELLOW
T2
BLACK
WHITE
F1
F2
6A