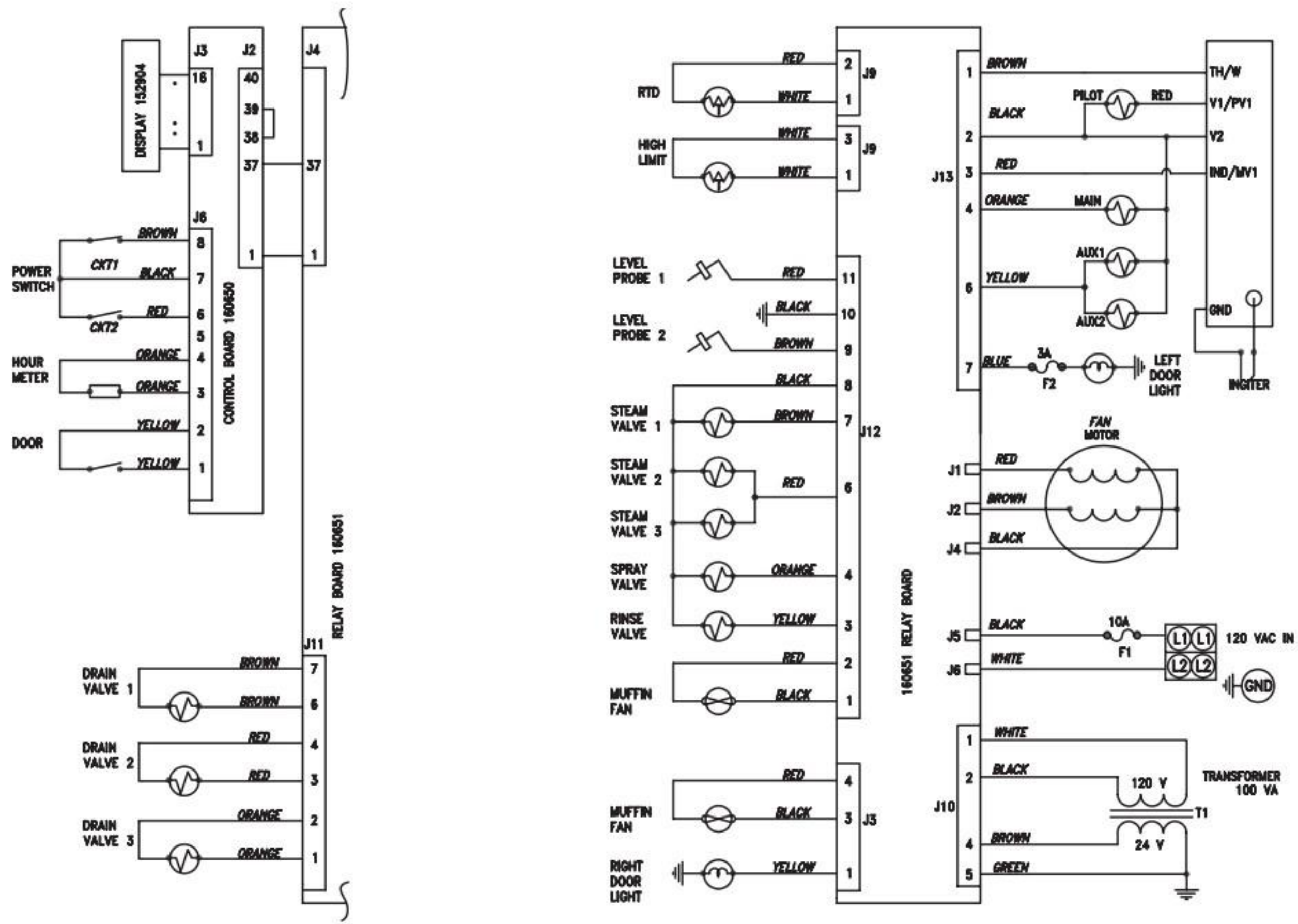
DISPLAY 152904
J3
J2
J4
J6
CONTROL BOARD 160650
RELAY BOARD 160651
POWER SWITCH
CKT1
CKT2
BROWN
BLACK
RED
HOUR METER
ORANGE
DOOR
YELLOW
J11
DRAIN VALVE 1
DRAIN VALVE 2
DRAIN VALVE 3
RTD
HIGH LIMIT
WHITE
J9
LEVEL PROBE 1
LEVEL PROBE 2
STEAM VALVE 1
STEAM VALVE 2
STEAM VALVE 3
SPRAY VALVE
RINSE VALVE
MUFFIN FAN
J12
J3
RIGHT DOOR LIGHT
160651 RELAY BOARD
J13
TH/W
V1/PV1
V2
IND/MV1
GND
PILOT
MAIN
AUX1
AUX2
3A
F2
LEFT DOOR LIGHT
IGNITER
FAN MOTOR
J1
J2
J4
J5
J6
10A
F1
120 VAC IN
L1
L2
J10
120 V
24 V
T1
TRANSFORMER 100 VA

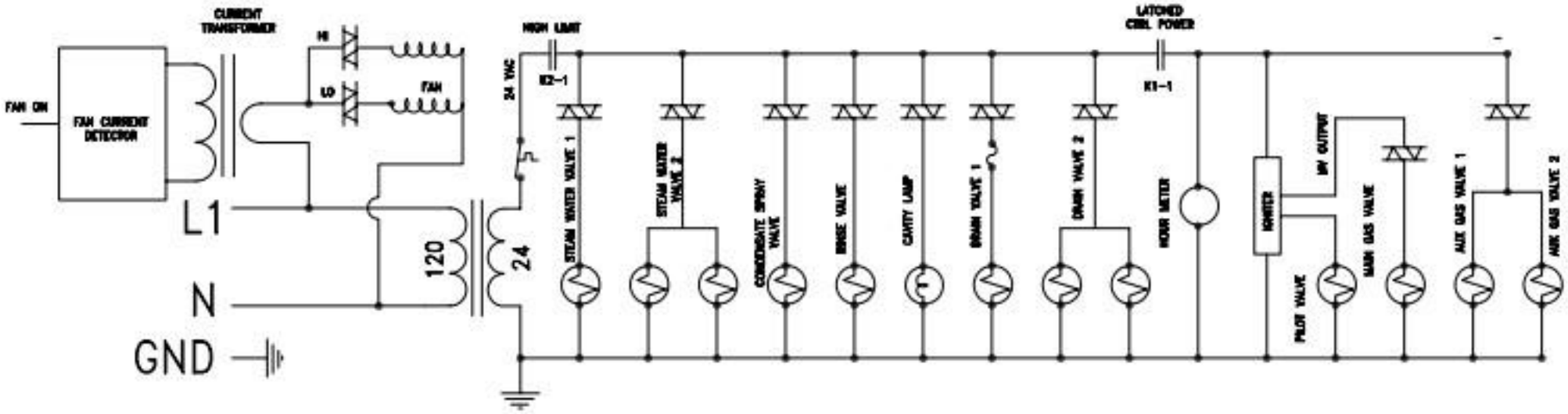
FAN ON
FAN CURRENT DETECTOR
CURRENT TRANSFORMER
HI
LO
FAN
L1
N
GND
120
24
24 VAC
HIGH LIMIT
K2-1
STEAM WATER VALVE 1
STEAM WATER VALVE 2
CONDENSATE SPRAY VALVE
RINSE VALVE
CAVITY LAMP
DRAIN VALVE 1
DRAIN VALVE 2
HOUR METER
LATCHED CTRL POWER
K1-1
IGNITER
MV OUTPUT
PILOT VALVE
MAIN GAS VALVE
AUX GAS VALVE 1
AUX GAS VALVE 2

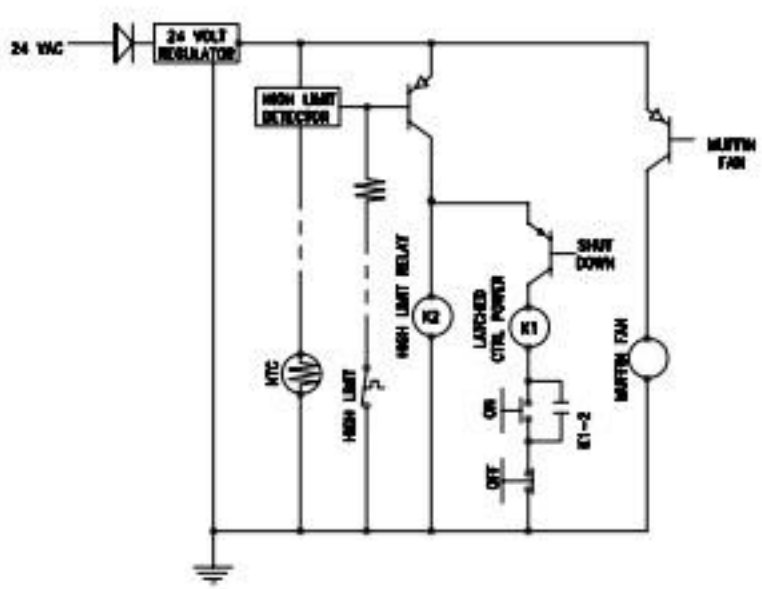
24 VAC
24 VOLT REGULATOR
HIGH LIMIT DETECTOR
NTC
HIGH LIMIT
HIGH LIMIT RELAY
K2
LATCHED CTRL POWER
K1
ON
OFF
K1-2
SHAV DOWN
MUFFIN FAN
MUFFIN FAN

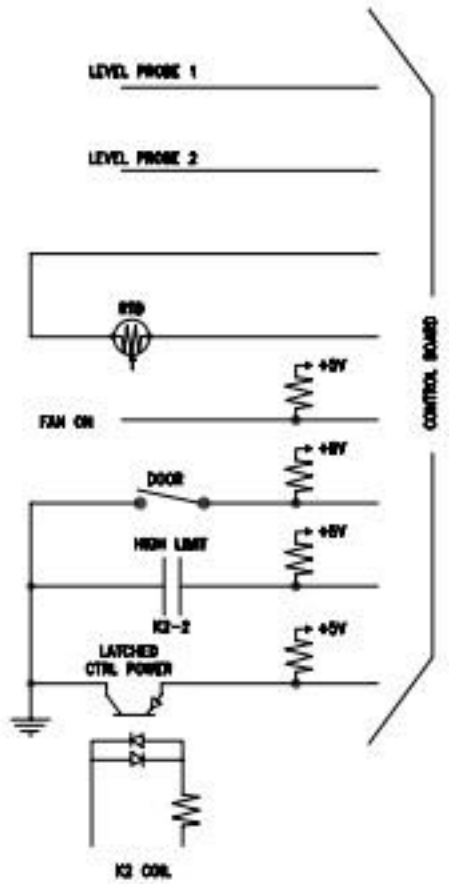
LEVEL PROBE 1
LEVEL PROBE 2
RTD
FAN ON
DOOR
HIGH LIMIT
K2-2
LATCHED CTRL POWER
+5V
K2 COIL
CONTROL BOARD