5.7G PARTS EXPLOSION DIAGRAM

(03/23/2001)
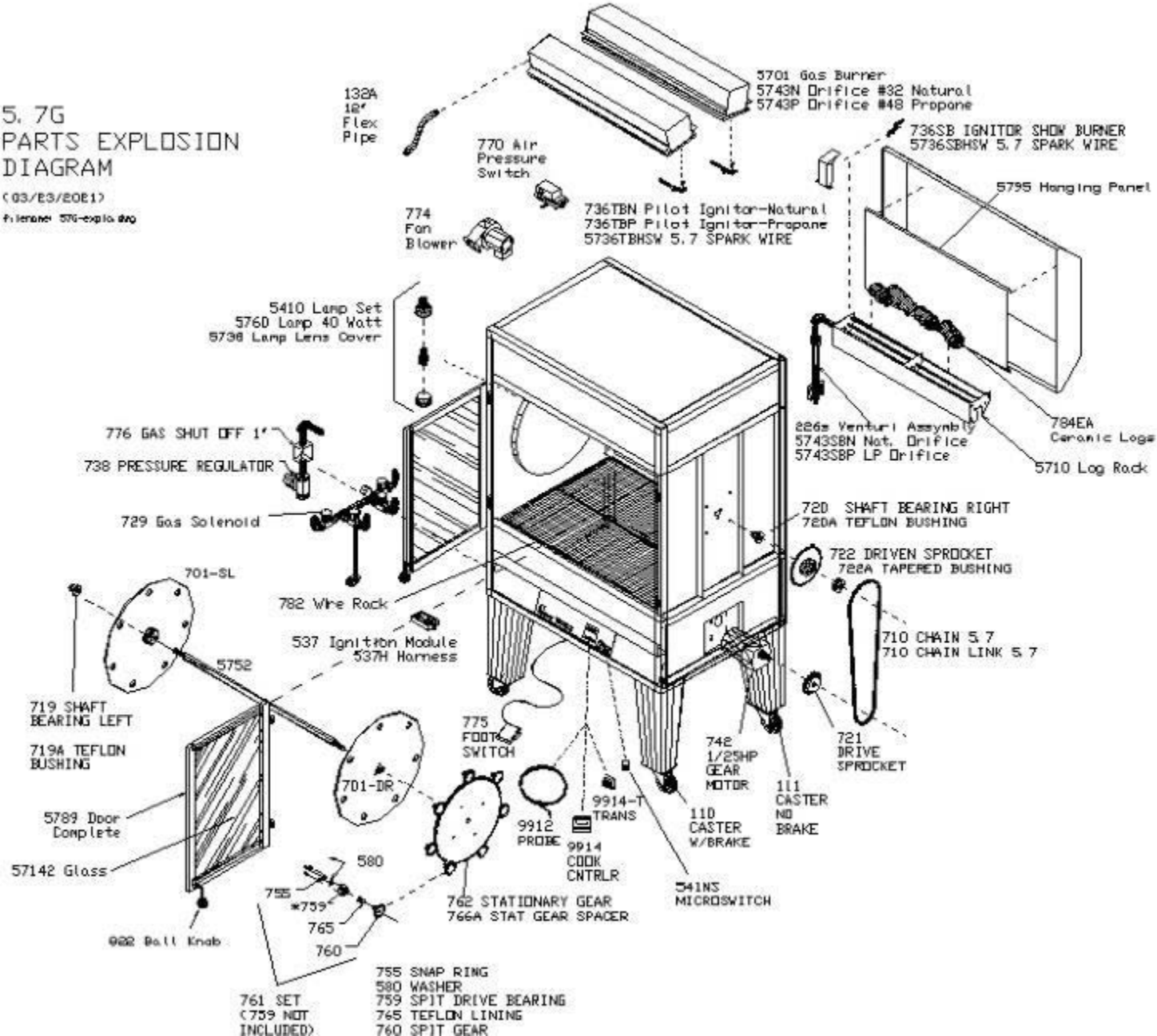
filename: 57G-explo.dwg