INSTRUCTIONS

MODEL 3613/3613N & 3713/3713N SLICERS

MODELS		
3613	*Manual Slicer*	*ML-136143*
3613N	*Manual Slicer*	*ML-136180*
3713	*Automatic Slicer*	*ML-136144*
3713N	*Automatic Slicer*	*ML-136181*



HOBART

701 S. RIDGE AVENUE
TROY, OHIO 45374-0001

937 332-3000

www.hobartcorp.com

FORM 35218 Rev. A (June 2009)

TABLE OF CONTENTS

GENERAL 3

Accessories & Options 3

INSTALLATION. 4

Unpacking. 4

Product Tray 4

Sharpener 5

Top Knife Cover. 5

Electrical 5

Clean Before Using. 5

OPERATION. 6

Slicing — Model 3613 & 3613N 6

Slicing — Model 3713 & 3713N 7

Cleaning 8

Cleaning the Knife in Place (3613N & 3713N). 8

Using the Knife Removal Tool (3613 & 3713) 10

Reassemble Slicer Parts. 11

MAINTENANCE 12

Knife Sharpening. 12

Lubrication — Carriage Slide Rod 12

Service 12

© HOBART CORPORATION 2009

Installation, Operation and Care of MODEL 3613, 3613N, 3713 & 3713N SLICERS

SAVE THESE INSTRUCTIONS

GENERAL

The model 3613, 3613N, 3713 and 3713N slicers are equipped with a ½ HP motor and are available for single-phase electrical service. The slicer features the Hobart CleanCut™ 13" diameter contoured stainless steel knife. The slicer is furnished with a cord and plug as standard equipment. The model 3713 slicer features automatic slicing with a choice of three speeds for the PRODUCT TRAY (Fig. 1).

ACCESSORIES & OPTIONS

- **Fences** — The fence clamps on the PRODUCT TRAY to limit product movement during slicing.

- **Food Chute** — Clamps on the PRODUCT TRAY to limit movement of product during slicing (for tomatoes, onions or similar items).

- **Knife Removal Tool (3613 and 3713)** — Allows the KNIFE to be removed from the motor hub. After removal, the KNIFE remains attached to the KNIFE REMOVAL TOOL while the KNIFE is being cleaned in a sink or dishwasher. After the removed KNIFE is cleaned, the KNIFE REMOVAL TOOL is used to reattach the KNIFE to the motor hub on the slicer. Refer to pages 10 – 11 for additional information.

- **Deflector** — Assists in deflecting sliced product to the platter during slicing. The DEFLECTOR (Fig. 16) fits on the DEFLECTOR BRACKET located on the SHARPENER MOUNT.

- **4" Leg Set** — Raises the height of the slicer for use on some deli carts. To install: Remove the slicer feet (two adjacent feet at a time) by unscrewing them. Reinstall the slicer feet on the bottom of the 4" legs. Install a leg with foot in the two adjacent corners of the slicer base where the slicer feet were removed. Use the same process for the next two adjacent feet. There are three alternate corner locations that can be used for the legs/feet in case the table does not permit use of the standard corners. Assure proper stability by using only one alternate location for any corner.

INSTALLATION

UNPACKING

Immediately after unpacking the slicer, check for possible shipping damage. If the slicer is found to be damaged, save the packaging material and contact the carrier within 15 days of delivery.

Prior to installing the slicer, test the electrical service to assure it agrees with the specifications on the machine data plate. The data plate is located on the left side of the slicer base.

PRODUCT TRAY

The Product Tray (Fig. 1) must be installed.

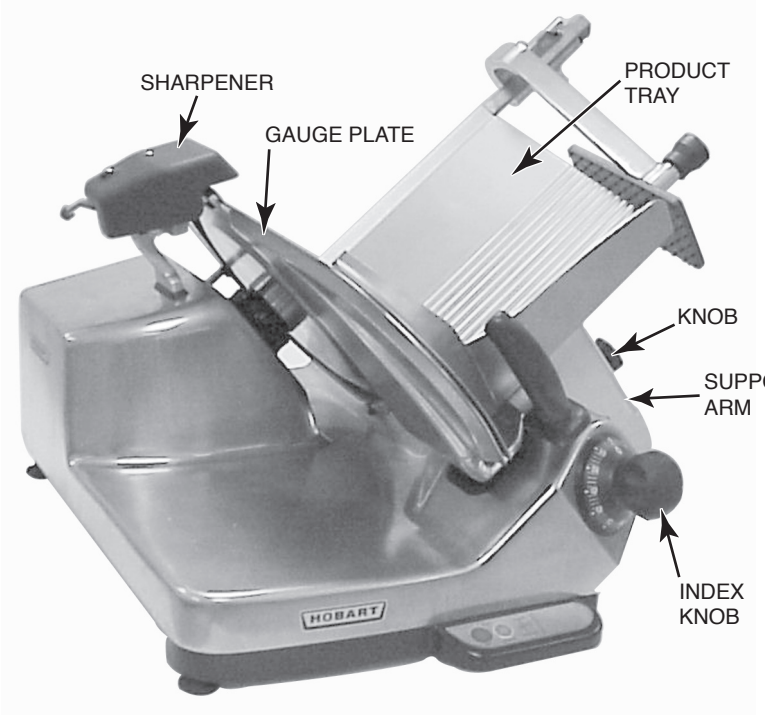

Fig. 1

To install the Product Tray on the slicer, lower the bottom of the Support Arm onto the Carriage Hinge Pins (Fig. 3). Tilt the Product Tray toward the Gauge Plate. Press the Knob on the Support Arm, and rotate it in either direction until the Knob is against the Support Arm. Then, turn the Knob clockwise a quarter turn until snug.

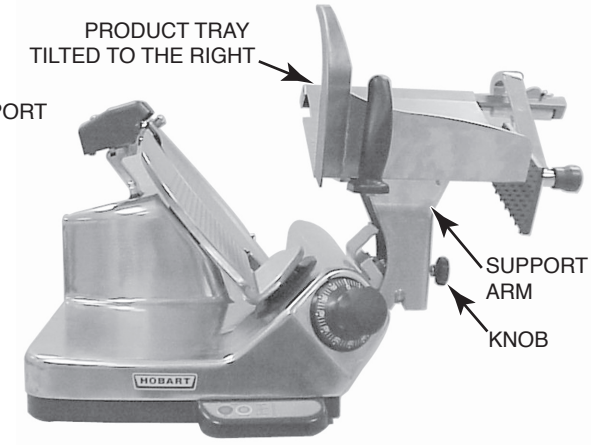

Fig. 2

To remove the Product Tray, pull the carriage home. Turn the Knob on the Support Arm counterclockwise a quarter turn. The Knob is spring-loaded and will pop outward. Tilt the Product Tray to the right, away from the Gauge Plate (Fig. 2). Then hold the Product Tray with both hands and lift upward (Fig. 3).

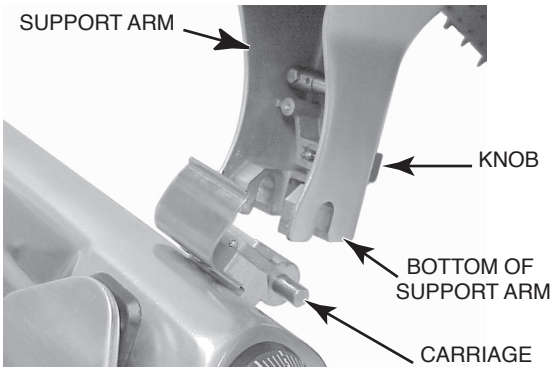

Fig. 3

SHARPENER

The Sharpener is mounted on top of the slicer (Fig. 4). You can remove it by lifting it straight up. Reinstall the Sharpener by lowering it back onto the Sharpener Mount so the Rod and Pin on the bottom of the Sharpener fit the Slot in the Sharpener Mount (Fig. 4). To use the Sharpener, refer to page 12.

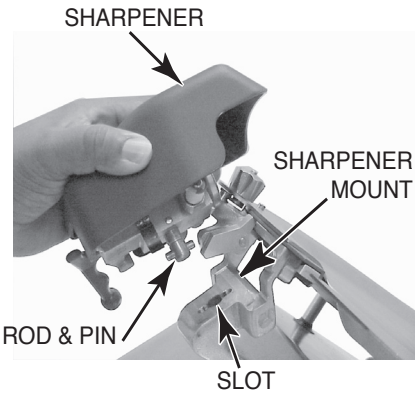

Fig. 4

TOP KNIFE COVER

The Top Knife Cover, and the plastic Ring Guard Cover underneath it, are shipped in place and secured with the Latch Knob on the Top Knife Cover (Fig. 7).

To remove the Top Knife Cover, turn the Latch Knob (Fig. 7) counterclockwise and lift the Top Knife Cover off the three guide Pins (Figs. 5, 6). Remove the plastic Ring Guard Cover by lifting it from the guide Pins (Fig. 6).

To reassemble the plastic Ring Guard Cover on the Ring Guard, position it using the three guide Pins (Fig. 6). Then, reassemble the Top Knife Cover over the plastic Ring Guard Cover; position the Top Knife Cover using the three guide Pins (Fig. 5).

Secure the Ring Guard Cover and Top Knife Cover by turning the Latch Knob counter-clockwise while lowering the Top Knife Cover; then, release the Latch Knob and turn it clockwise until snug (Fig. 7).



Fig. 5

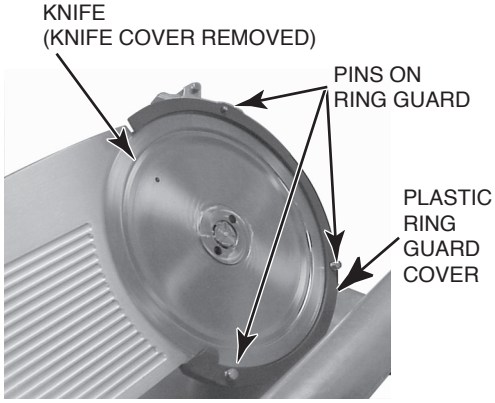

Fig. 6

ELECTRICAL

⚠ WARNING This machine is provided with a three-prong grounding plug. The outlet to which this plug is connected must be properly grounded. If the receptacle is not the proper grounding type, contact an electrician.

CLEAN BEFORE USING

The 3000 series slicer must be thoroughly cleaned and sanitized after installation and before being used. Refer to Cleaning, pages 8 – 11.

OPERATION

⚠ WARNING Rotating knife. Use meat grip. Unplug machine power cord before cleaning, servicing or removing parts. Replace parts before use.

SLICING — MODEL 3613 & 3613N

- Close the Gauge Plate by turning the Index Knob fully clockwise (Fig. 7).
- Pull the Product Tray (Fig. 7) all the way toward you until it reaches its stop (this is the home position).
- Raise the Meat Grip to the top of the Product Tray, and rest the Park Pin in the Meat Grip Slot (Fig. 8).
- Place the product to be sliced against the Gauge Plate on the Product Tray.
- Set the Meat Grip against the product, or use the Fence or Food Chute if desired. Refer to Accessories & Options on page 3.
- Turn the slicer on by pressing the Knife On button (Fig. 9).

Adjust the Gauge Plate to obtain the desired slice thickness by turning the Index Knob counterclockwise (Fig. 7). The numbers on the Index Knob do not indicate actual measurements but may be used for reference to duplicate slice thickness.

Use the Product Tray Handle (Fig. 7) to push and pull the Product Tray back and forth to slice. When finished, pull the Product Tray toward you until it stops. Turn the Index Knob fully clockwise to close the Gauge Plate — this will turn the slicer off. You can also press the Off button to stop the slicer.

Raise the Meat Grip to the top of the Meat Grip Slide Rod, and rest the Park Pin in the Meat Grip Slot (Fig. 8).

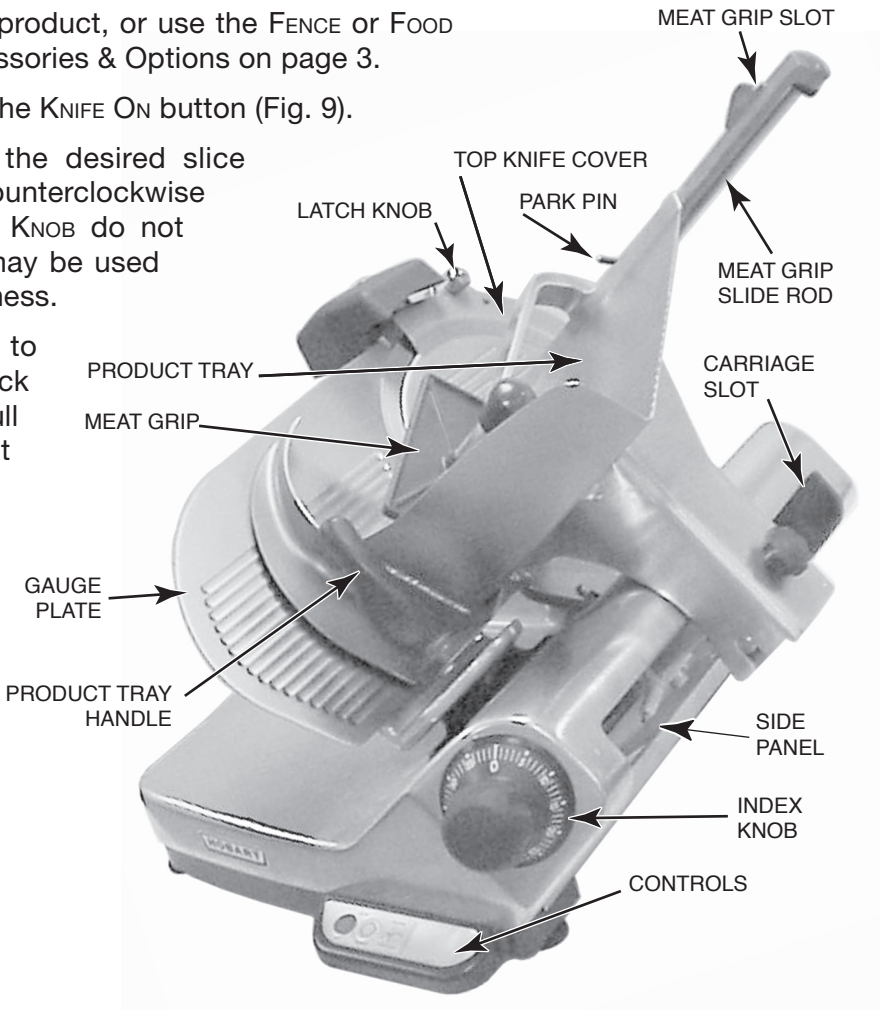

Fig. 7

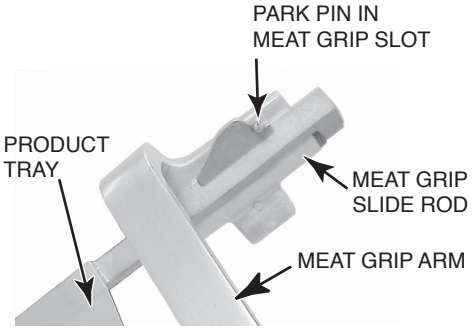

Fig. 8

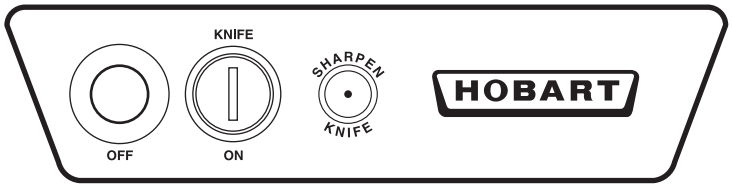

Fig. 9

SLICING — MODEL 3713 & 3713N

- Close the Gauge Plate by turning the Index Knob fully clockwise (Fig. 7).
- Pull the Product Tray (Fig. 7) all the way toward you until it reaches its stop (this is the home position).
- Raise the Meat Grip to the top of the Product Tray, and rest the Park Pin on the Meat Grip Slot.
- Place the product to be sliced against the Gauge Plate on the Product Tray.
- Set the Meat Grip against the product, or use the Fence or Food Chute if desired. Refer to Accessories & Options on page 3.
- Turn the slicer on by pressing the Knife On button (Fig. 10).

  Adjust the Gauge Plate to obtain the desired slice thickness by turning the Index Knob counterclockwise (Fig. 7). The numbers on the Index Knob do not indicate actual measurements but may be used for reference to duplicate slice thickness.

  Use the Product Tray Handle (Fig. 7) to push the Product Tray back and forth to slice manually. When finished, pull the Product Tray toward you until it stops. Close the Gauge Plate by turning the Index Knob fully clockwise. Press the Off button to stop the slicer. Raise the Meat Grip to the top of the Meat Grip Slide Rod, and rest the Park Pin in the Meat Grip Slot (Fig. 8).

To operate the slicer in Automatic mode

⚠ WARNING Flashing auto light means carriage paused. Turn machine off when loading product.

- Make sure the Product Tray is in the home position (all the way toward you).
- Load the product against the Gauge Plate on the Product Tray and set the Meat Grip against the product. Alternatively, you can secure the Fence or Food Chute to the Product Tray and load the product accordingly. Refer to Accessories & Options on page 3.
- Turn the slicer on by pressing the Knife On button (Fig. 10).
- Select one of the three speeds for the Product Tray to move back and forth. Press the Rabbit symbol to increase speed; press the Turtle symbol to decrease speed (Fig. 10). The speed indicator, located to the left of the symbols, shows which speed is selected. You can change the speed at any time.
- Press the Auto On / Pause button to start slicing (Fig. 10); the Product Tray moves back and forth at the speed and at the stroke length you have selected.
- When done slicing, you can stop by pressing either the Auto On / Pause button or the Off button (Fig. 10). Pressing Auto On/ Pause returns the Product Tray to the home position (all the way toward you).
  - If you pressed Auto On / Pause, the Knife continues to run. If you wish to resume slicing, you can press the Auto On / Pause button again.
  - If you pressed Off or turned the Index Knob fully clockwise, the Knife stops, the Product Tray stops where it is and the stroke length reverts back to a full stroke length.

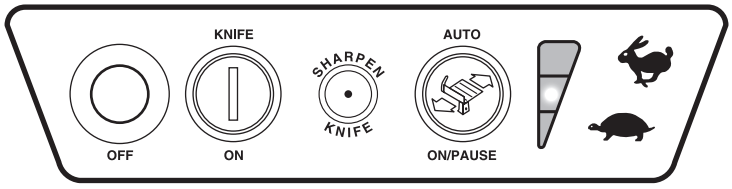

Fig. 10

CLEANING

This machine must be thoroughly cleaned and sanitized at least as often as required by local regulation or after being idle for an extended period of time.

⚠ WARNING The slicer knife is very sharp. Exercise extreme caution when working near the knife.

⚠ WARNING Unplug the machine power cord and turn the index knob fully clockwise to close the gauge plate before cleaning the slicer.

For general cleaning, use a clean cloth soaked in mild detergent and warm water, and wipe all surfaces of the machine especially where food or liquids can accumulate. Be sure to wipe any surface where there is frequent hand contact including handles, knobs and the control pad. Use generous amounts of soapy water and sanitizer on the Sharpener Mount hardware (Fig. 12). Rinse using a fresh cloth and clean water. Apply sanitizing solution to cleaned surfaces. Make sure the slicer is clean of all food soil before sanitizing. Use only products formulated to be safe on stainless steel or aluminum. DO NOT exceed chemical manufacturer's recommended concentrations for detergent or sanitizer.

To clean the Product Tray (remember, the Gauge Plate is already closed) pull the Product Tray all the way to the front. Turn the Knob on the Support Arm counterclockwise a quarter turn to release. Tilt the Product Tray to the right (Fig. 11). The Product Tray can be cleaned in this open position, or it can be removed by grasping with both hands and lifting straight up. Once removed, the Product Tray, including the Pusher and Pusher Handle (Fig. 11), can be washed, rinsed and sanitized in a sink.

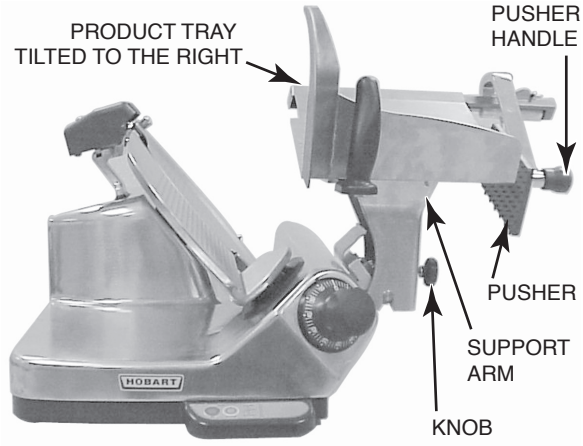

Fig. 11

Cleaning the Knife in Place (3613N & 3713N)

Remove the Sharpener by lifting it straight up (Fig. 12).

Wipe out any residue remaining inside the Sharpener housing. Wash, rinse and sanitize the Sharpener in a sink or dishwasher.

Remove the Top Knife Cover by turning the Latch Knob (Fig. 7) counterclockwise and lifting the Top Knife Cover free of the three guide Pins (Figs. 13, 14).

Remove the plastic Ring Guard Cover from the three guide Pins on the Ring Guard (Fig. 14). Wash, rinse and sanitize the Top Knife Cover and the plastic Ring Guard Cover in a sink.

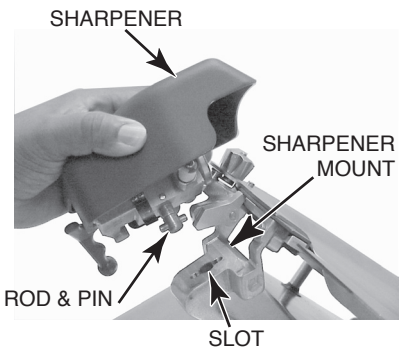

Fig. 12



Fig. 13

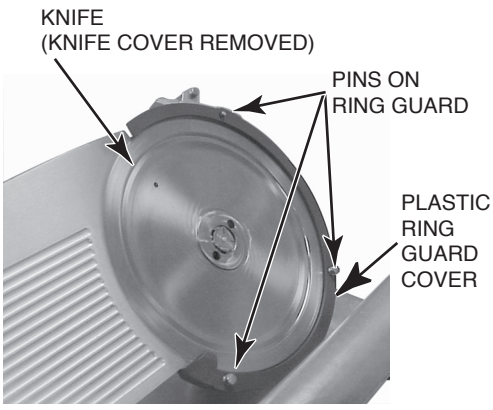

Fig. 14

Clean completely around the Ring Guard by working a moistened, folded paper towel between the Ring Guard and the Knife (Fig. 15).

Wash, rinse and sanitize both sides of the Knife by wiping outward from the center. Never clean any part of the slicer with steel pads.

Carefully reassemble the plastic Ring Guard Cover by putting it in position using the three guide Pins (Fig. 14). Carefully reassemble the Top Knife Cover (Fig. 13) by putting it in position over the plastic Ring Guard Cover using the three guide Pins. Secure both Ring Guard Cover and Top Knife Cover by turning the Latch Knob (Fig. 7) counterclockwise while lowering the Top Knife Cover; then release the Latch Knob and turn it clockwise until snug.

Reassemble the Sharpener by lowering it straight down so the Rod and Pin fit the Slot on the Sharpener Mount (Fig. 12).

Replace the Deflector, if present, below the Knife (Fig. 16); also, refer to page 3.

To reinstall the Product Tray, hold it with both hands and lower it so the bottom of the Support Arm fits on the Carriage Hinge Pins (Fig. 17). Return the Product Tray to the Gauge Plate by tilting the Product Tray to the left. Turn the Knob on the Support Arm in either direction until it moves inward, then turn the Knob clockwise until snug.

The slicer has a Cleaning Leg (Fig. 18) underneath the machine. To engage the Cleaning Leg, lift the front of the slicer base. The Cleaning Leg will swing straight down. Pull the Cleaning Leg all the way to the front so the slicer is completely supported before cleaning underneath.

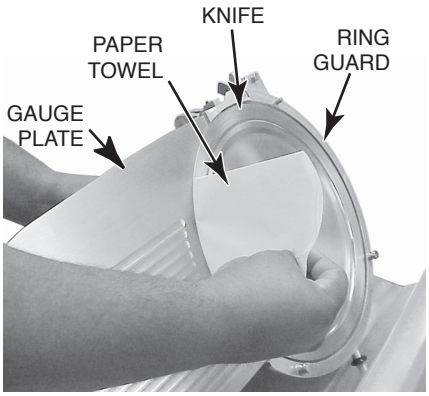

Fig. 15

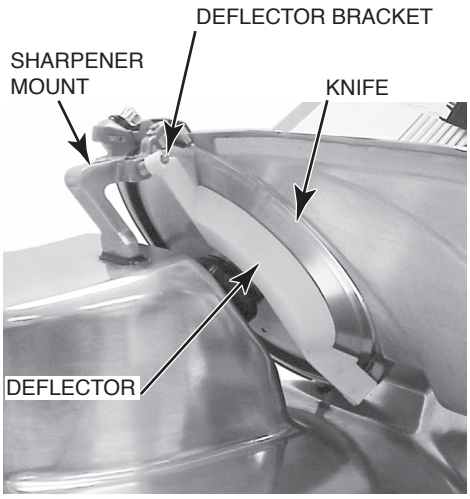

Fig. 16

NOTE: Failure to follow use, care, and maintenance instructions may void your Hobart warranty.

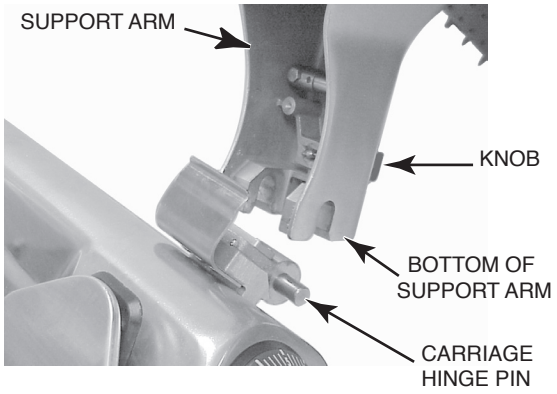

Fig. 17



Fig. 18

Using the Knife Removal Tool (3613 & 3713)

⚠ WARNING Unplug the machine power cord and turn the index knob fully clockwise to close the gauge plate before cleaning the slicer.

NOTICE Slicer must be cleaned with knife removed (3613 & 3713).

To Remove the Knife . . .

- Remove the Top Knife Cover and the plastic Ring Guard Cover (Figs. 13, 14). Remove the plastic cover from the Knife Nut.

Orient the Knife . . .

- Rotate the Knife using your hand on the back of the knife, the arrow on the Knife must align with the Pin on the Ring Guard at the 1 o'clock position (Fig. 19).

Attach the Knife Removal Tool . . .

- Place the Knife Removal Tool on the Knife. The three slots on the Tool fit the three Pins on the Ring Guard (Fig. 20). The Pin on the Knife Removal Tool fits the hole in the Knife at the 11 o'clock position (Fig. 21).
- First, push the Handle firmly, all the way into the hub. Then, turn the Handle counterclockwise until it stops (Fig. 22). You may experience resistance when turning.
- Lift Knife and Tool up and out (Fig. 23).

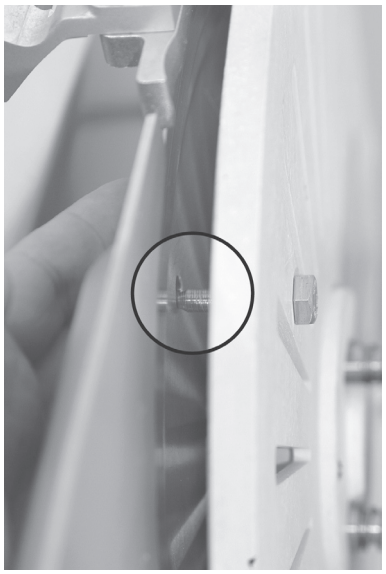

Fig. 21

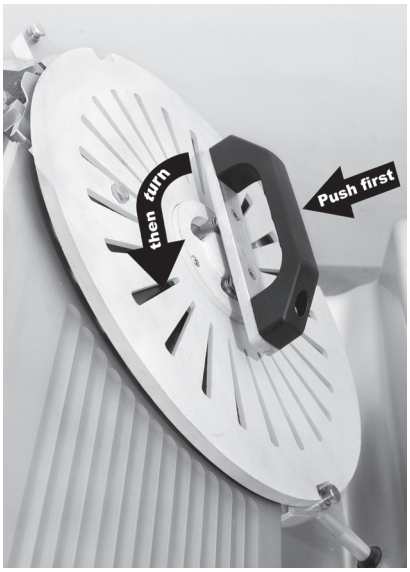

Fig. 22

- Wash, rinse and sanitize the Knife and Knife Removal Tool in a sink or dishwasher.
- Wash, rinse and sanitize the slicer base (Fig. 24).
- Always carry Knife Removal Tool and Knife by Tool Handle.

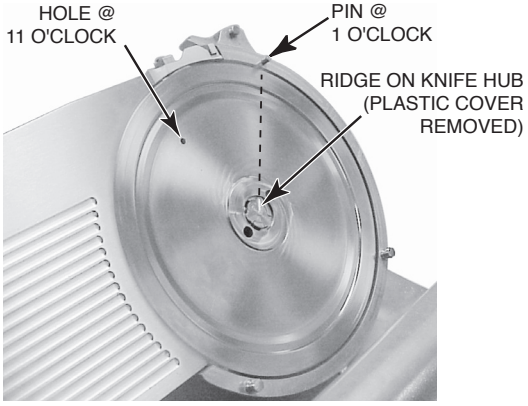

Fig. 19

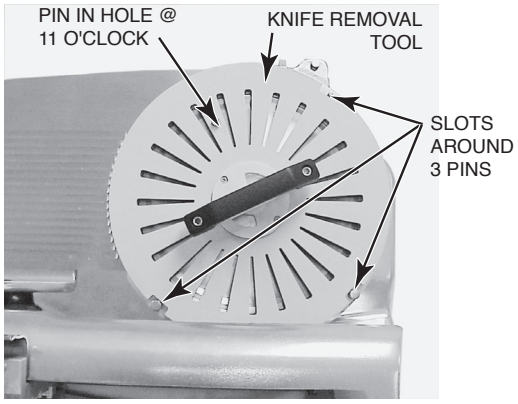

Fig. 20

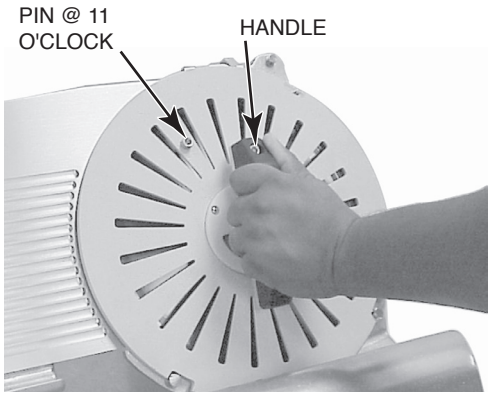

Fig. 23

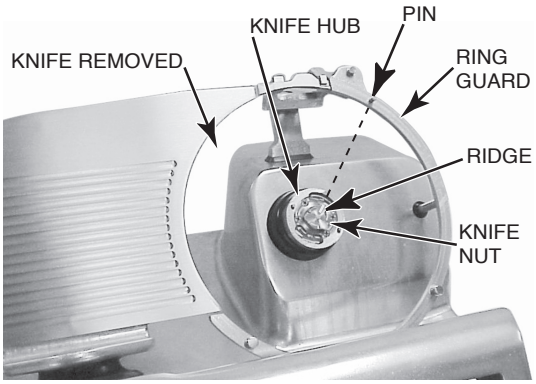

Fig. 24

To Reinstall the Knife . . .

- Orient the Ridge on the Knife Hub so it points to the Pin on the Ring Guard at the 1 o'clock position (Fig. 24).
- Place the Knife and Tool so the Pin on the Knife Removal Tool is at the 11 o'clock position (Fig. 23). The Slots on the Knife Removal Tool fit around the three Pins on the Ring Guard (Fig. 20).
- If the Tool does not push the pins on the back of the Knife into the Hub (Fig. 25), slightly nudge the Handle upwards (Fig. 26) to lock the pins into the Knife Nut.
- First, push the Handle firmly, all the way into the Hub to engage the pins. Then, turn the Handle clockwise until it stops (Fig. 27). You may experience resistance when turning.
- The Knife is reattached. Lift the Tool up and out.
- Replace the plastic cover on the Knife Nut.

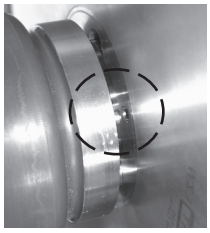

Fig. 25



Fig. 26



Fig. 27

Reassemble Slicer Parts

- Place the plastic Ring Guard Cover on the Ring Guard, align using the three guide Pins (Fig. 14).
- Place the Top Knife Cover on top of the Ring Guard Cover, aligning with the three guide Pins (Fig. 13). Secure the Ring Guard Cover and the Top Knife Cover by turning the Latch Knob (Fig. 7) counterclockwise while lowering the Top Knife Cover; then, release the Latch Knob and turn it clockwise until snug.
- Lower the Sharpener so the Rod and Pin, underneath, fit the Slot in the Sharpener Mount (Fig. 12).
- Reinstall the Product Tray by holding it with both hands and lowering the bottom of the Support Arm so it fits on the Carriage Hinge Pins (Fig. 17).
- Return the Product Tray to the Gauge Plate by tilting it to the left. Turn the Knob on the Support Arm loosely in either direction until it moves inward, then turn it clockwise until snug (Fig. 28).

To reattach accessories — refer to page 3.

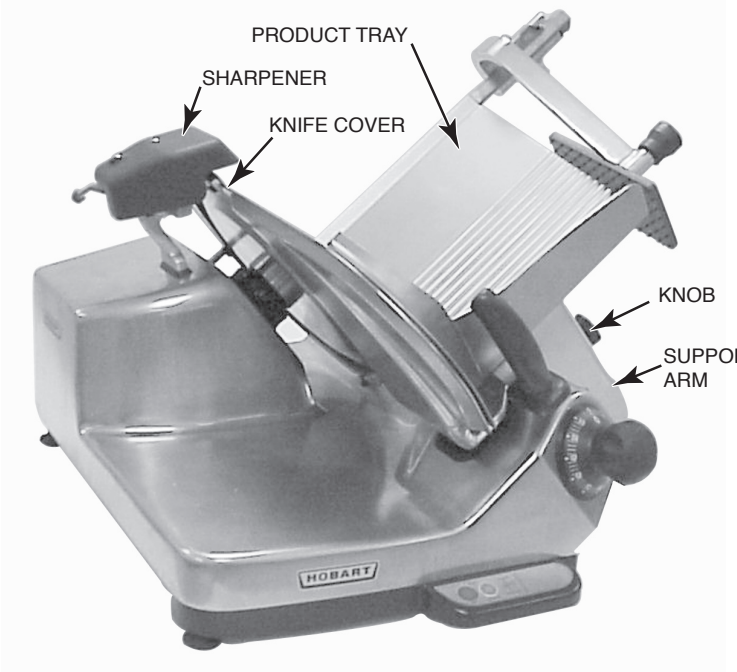

Fig. 28

MAINTENANCE

⚠ WARNING Unplug the machine power cord and turn the index knob fully clockwise to close the gauge plate before doing any maintenance on the slicer.

KNIFE SHARPENING

The CleanCut™ Knife will provide long service in normal food retail or commercial kitchen use. **Sharpen only when necessary; prolonged or too frequent sharpening results in unnecessary Knife wear.** The Sharpen Knife indicator light (Fig. 9 or Fig. 10) will come on after a factory-preset number of slicing strokes to indicate when sharpening is needed. This number has been set to represent a typical operation. Your operation may need more frequent sharpening.

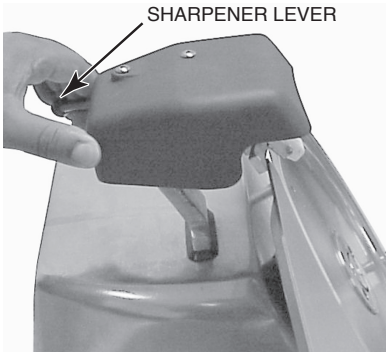

Fig. 29

Remove the Top Knife Cover and the plastic Ring Guard Cover. Turn the Latch Knob counterclockwise and lift the Top Knife Cover and plastic Ring Guard Cover off the slicer (Figs. 5, 6 & 7). Thoroughly wash around the Knife and both sides of the outer rim of the Knife. Food debris should not be allowed to transfer from the Knife to the Sharpener. Plug in the machine power cord. When Sharpen Knife indicator light is on, press and hold the Sharpen Knife button (Fig. 9 or Fig. 10) with your right hand while pulling the Sharpener Lever fully forward with your left hand (Fig. 29). The Knife comes on, sharpens for 15 seconds and shuts off. Release the Sharpener Lever. The stroke counter will automatically reset and the indicator light will turn off. To sharpen before the Sharpen Knife indicator light illuminates: Follow the directions above, but instead of turning on the motor with the Sharpen Knife button, press the On button for 15 seconds. Then, release the Sharpener Lever and press the Off button. Unplug the Slicer power cord. Wipe the slicer with a clean damp cloth to remove any grinding particles. Reinstall the plastic Ring Guard Cover and the Top Knife Cover.

LUBRICATION — Carriage Slide Rod

The slicer lubrication system requires that the reservoirs under the Carriage Transport be refilled with Lubriplate FMO-200-AW oil (not supplied) after approximately 1 year of operation for a manual slicer (model 3613/3613N) and after approximately 6 months of operation on an automatic slicer (model 3713/3713N). Typical operation is estimated to be 2 hours of slicing per day. To check reservoir levels, look through the Carriage Slot (Fig. 7) to observe the oil level relative to the red line on the Clear Reservoirs under the Carriage Transport (Fig. 30). The side panel can be removed for this operation (Fig. 7). A flashlight (not supplied) might be helpful. To replenish the oil reservoirs if below the red line: Aim the telescoping tube on the Lubriplate FMO-200-AW oil bottle at the Reservoir Funnel above the Front Bearing Block. Gently squeeze the sides of the bottle to add drops slowly to the front reservoir funnel until filled to the red line (Fig. 30). Repeat the above procedure to refill the rear Reservoir. Do not overflow reservoir funnels. Stop adding oil once the oil level on both reservoirs reach the red line.

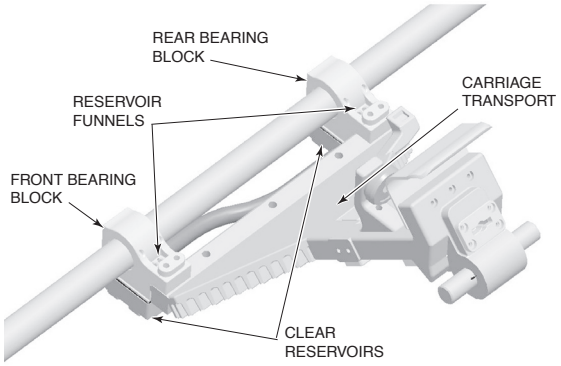

Fig. 30

LUBRICATION — Meat Grip Slide Rod

The meat grip slide rod can be lubricated periodically or when any resistance is felt while using the meat grip assembly (Fig. 7). First, wipe the meat grip slide rod so the lubrication is applied to a clean dry surface. Next, gently squeeze a small amount of the provided Lubriplate oil on the rod. Then slide the meat grip up and down the rod to restore smooth operation.

SERVICE

Contact your local Hobart-authorized service office for any repairs or adjustments needed on the slicer.