INSTRUCTIONS

MODEL 610 SLICER

MODEL

610 ML-38388

HOBART
CORPORATION

701 S. RIDGE AVENUE
TROY, OHIO 45374-0001

937 332-3000

www.hobartcorp.com

FORM 34569 (Jan. 2001)

Installation, Operation, and Care of MODEL 610 SLICER

SAVE THESE INSTRUCTIONS

GENERAL

The model 610 slicer is compact, convenient, and easy to use. The finish is polished anodized aluminum and the slicer is designed to be easy to clean. The ⅕ HP motor delivers acceptable performance in kitchens or food stores.

INSTALLATION

UNPACKING

Immediately after unpacking the slicer, check it for possible shipping damage. If the slicer is found to be damaged after unpacking, save the packaging material and contact the carrier within 15 days of delivery.

Prior to installation, test the electrical service to make sure that it agrees with the specifications on the machine data plate (120 Volts / 60 Hertz / 1 Phase).

To install the carriage handle, the carriage must be removed. Loosen the carriage hand knob (Fig. 1) and lift the carriage from its support. Install the carriage handle (Fig. 1) in the hole in the back of the carriage and secure it with the supplied fasteners.

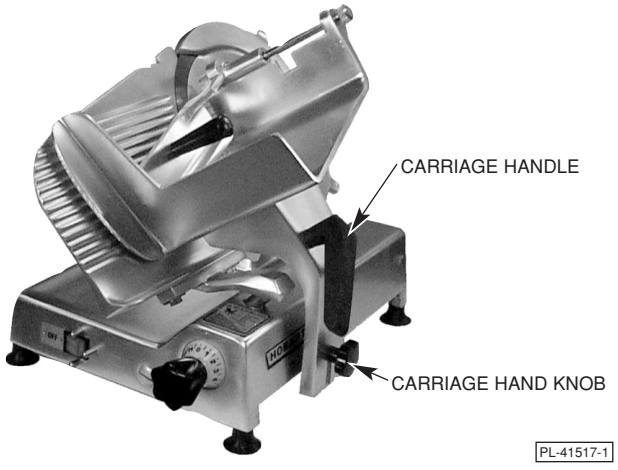

Fig. 1

Replace the carriage and secure it by tightening the carriage hand knob.

This machine must be thoroughly cleaned and sanitized after installation and before being put into service. Refer to CLEANING, page 3.

ELECTRICAL

WARNING: THIS MACHINE IS PROVIDED WITH A THREE-PRONG GROUNDING PLUG. THIS PLUG MUST BE CONNECTED TO A PROPERLY GROUNDED OUTLET. IF THE RECEPTACLE IS NOT THE PROPER GROUNDING TYPE, CONTACT AN ELECTRICIAN.

OPERATION

SAFETY

SAFETY DEVICES INCORPORATED IN THIS SLICER MUST BE IN THEIR CORRECT OPERATING POSITIONS ANYTIME THE SLICER IS IN USE.

The *KNIFE GUARD* (Fig. 2) must be in position over the knife and secured by tightening the hand knob (Fig. 2).

The *MEAT GRIP* (Fig. 2) must be used when slicing to keep your hands away from the knife.

When the slicer is not running, the *INDEX KNOB* (Fig. 2) must be set on zero (fully clockwise) to prevent the knife edge from being exposed.

Always UNPLUG the power cord before cleaning or moving the slicer.

SLICING

Pull the carriage (Fig. 2) toward you until it stops and place the product to be sliced on the carriage tray.

Set the meat grip against the product and turn on the slicer by pressing the on-off switch (Fig. 2).

Adjust the slice thickness by turning the index knob. The numbers on the index knob do not indicate actual measurements but may be used for reference to duplicate slice thicknesses.

Using either the carriage handle or meat grip handle, push the carriage back and forth to slice.

Always turn off the slicer and turn the index knob clockwise to zero when not slicing.

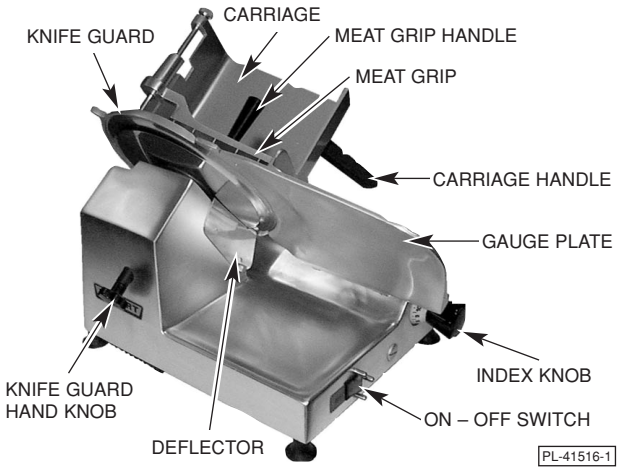

Fig. 2

CLEANING

This machine must be thoroughly cleaned and sanitized after each day's operation or anytime it will not be used for an extended period of time.

WARNING: THE SLICER KNIFE IS VERY SHARP. USE EXTREME CAUTION WHEN WORKING NEAR THE KNIFE.

WARNING: UNPLUG MACHINE POWER CORD AND TURN THE INDEX KNOB FULLY CLOCKWISE BEFORE CLEANING THE SLICER.

Remove the carriage by loosening the carriage hand knob and lifting the carriage from its support.

Remove the deflector (Fig. 2) by loosening its thumb screw.

Using a mild soap (such as Spic and Span) and hot water solution and a clean cloth, wipe all surfaces of the slicer. Thoroughly rinse it with another clean cloth and fresh water. Use only products formulated to be safe on stainless steel or aluminum.

Remove the knife guard by removing the knife guard hand knob (Fig. 2). With the hand knob removed, grasp the edge of the knife guard and carefully lift it straight off of the knife.

CAREFULLY wash both sides of the knife, with the index knob turned fully clockwise. Wash the knife by wiping outward from the center. ALWAYS rinse the knife thoroughly using fresh water and a clean cloth. Never use steel pads to clean the knife.

Wash and thoroughly rinse the removed components prior to reassembling them.

Do not exceed chemical manufacturer's recommended concentrations for detergent or sanitizer. Do not exceed 200 parts per million concentration of available chlorine. For example, mixing 1 tablespoon of 5.25% sodium hypochlorite bleach with 1 gallon of water yields a solution containing 200 ppm of available chlorine. Solution with concentrations greater than 200 ppm will accelerate corrosion of metals. Maximum exposure to sanitizing solution varies with temperature and concentration. Rinse with clean water.

DO NOT wash any slicer components in a dishwasher. DO NOT immerse slicer base or motor in water. DO NOT hose down slicer or splash excessively with water.

If using a chlorinated solution, dilute per manufacturer's guidelines to prevent discoloration of the base.

NOTE: Failure to follow use, care, and maintenance instructions may void your Hobart warranty.

MAINTENANCE

KNIFE SHARPENING

Your slicer knife will provide long service in normal deli, food store, or commercial kitchen use. However, in high volume applications where it is a practice to sharpen the knife frequently or even daily, the knife will be expended in a shorter time.

WARNING: UNPLUG MACHINE POWER CORD.

Remove the carriage by loosening the carriage hand knob and lifting it from its support.

With the index knob turned fully clockwise and the knife guard in place, carefully wash the area around the knife and all exposed knife surfaces (front and back).

Set the index knob at approximately 9½. Remove the sharpener from its storage position in the base of the slicer. The sharpener is secured by its thumb screw in a hole on the carriage side of the base of the slicer. Remove the thumb screw and mount the sharpener in the notch on top of the gauge plate as shown in Fig. 3. Tighten the thumb screw against the hole in the gauge plate.



Fig. 3

Plug in the power cord and press the on-off switch to start the slicer. Slowly turn the index knob clockwise to grind the beveled (back) edge of the knife. Use light pressure when grinding the knife. Grind only until a burr appears on the front edge of the knife.

Turn off the slicer and inspect for a burr on the front edge of the knife. Repeat grinding as necessary until the knife edge is burred.

When a burr appears, start the slicer and turn the index knob counterclockwise to lightly engage the truing wheel. After three seconds, turn the index knob clockwise so that neither stone touches the knife.

Turn off the slicer, UNPLUG MACHINE POWER CORD, remove the sharpener, and turn the index knob fully clockwise. Replace the sharpener in its storage position.

Wipe the slicer with a clean damp cloth to remove any grinding particles.

LUBRICATION

The carriage slide rod underneath the slicer and the gauge plate slide rod should be lubricated with a light coating of "food grade" oil. Contact your local Hobart Service Office for the recommended lubricant.

DO NOT lubricate the meat grip slide rod.

The motor has sealed bearings and requires no lubrication maintenance.

WEAR ADJUSTMENT

After several years of operation and many sharpenings of the knife, it may become necessary to have the gauge plate adjusted closer to the knife. Contact your local Hobart Service Office if this service becomes necessary as it must be done by an authorized Hobart Service Technician.