HOBART

CATALOG OF REPLACEMENT PARTS



610-1 Slicer P/N 00-913028

610 SLICER

ML-38388

A product of HOBART 701 S. RIDGE AVENUE TROY, OHIO 45374-0001

FORM 16012 Rev. A (November 2004)

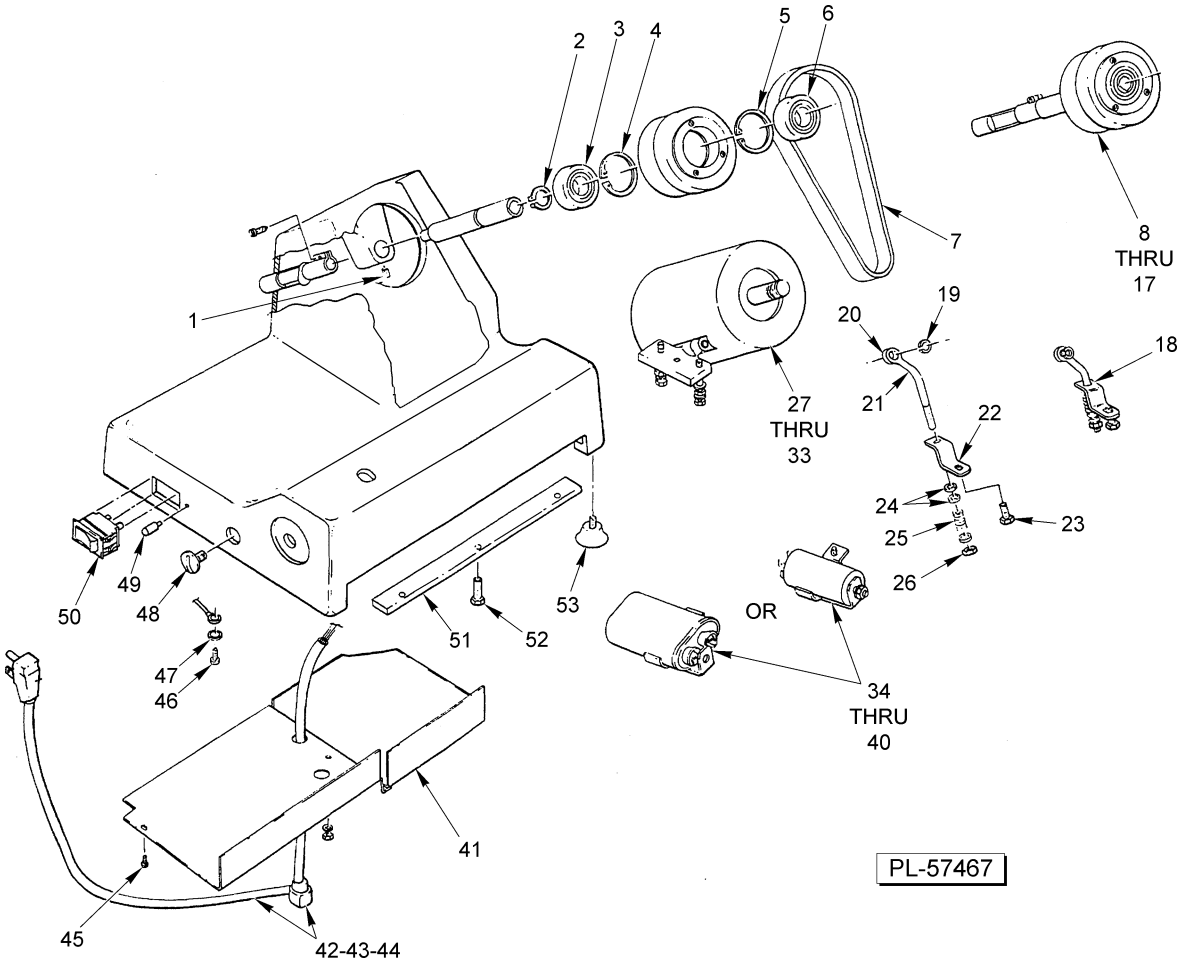

DRIVE

 © HOBART

DRIVE

ILLUS. PL-57467	PART NO.	NAME OF PART	AMT.
1	SC-117-34	Set Screw M8 x 1.25 x 8MM Hdls., Cup Pt.	1
2	RR-004-18	Ring – Retaining	1
3	BB-020-18	Ball Bearing – NTN 6203ZZ	1
4	RR-010-08	Ring – Retaining	1
5	RR-010-08	Ring – Retaining	1
6	BB-005-23	Ball Bearing – Hoover NSK62	1
7	00-292583	Belt – Drive	1
8	00-292562	Screw 2.9 x 13	1
9	00-292563	Shaft – Extension	1
10	00-292564	Set Screw M8 x 10	1
11	00-292584	Bearing	1
12	00-292585	Ring – Snap	2
13	00-292586	Hub – Knife Shaft	1
14	00-292587	Bearing	1
15	00-292588	Ring – Snap	1
16	00-292589	Shaft – Knife	1
17	00-292582	Knife Shaft Assy. (Incls. Items 8 thru 16)	1
18	00-292570	Belt Adjustment Assy. (Incls. Items 19 thru 26)	1
19	00-292530	Washer – Rubber	1
20	00-292575	E-Ring	1
21	00-292576	Rod – Connecting	1
22	00-292577	Bracket – Connecting Rod	1
23	00-292578	Screw M5 x 10	1
24	00-292526	Washer M6	2
25	00-292580	Spring	1
26	00-292581	Nut	1
27	00-478178	Motor (220 V., 50 Hz., 1 Ph.)	1
28	00-292514	Nut M6	1
29	00-292572	Bracket – Motor Mounting	1
30	00-292573	Stud	1
31	00-292574	Motor Assy. (115 V., 60 Hz., 1 Ph.)	1
32	00-292581	Nut	1
33	00-292571	Motor & Bracket Assy. (Incls. Items 28 thru 32)	1
34	00-292536	Capacitor (7.5 to 8 MFD)	1
35	00-292565	Bracket – Capacitor	1
36	00-292566	Lockwasher	1
37	00-292567	Screw M6 x 16	1
38	WL-019-74	Lockwasher M8 Helical (SST)	1
39	NS-047-36	Nut M8 x 1.25 Hex (SST)	1
40	00-292569	Capacitor & Bracket Assy. (Incls. Items 34 thru 39)	1
41	00-292558	Cover – Bottom	1
42	00-292555	Cord	1
43	00-292557	Strain Relief	1
44	00-292553	Cord & Plug Assy. (Incls. Items 42 & 43)	1
45	SD-026-27	Self-Tapping Screw 6-20 x 1/2 Phil. Truss Hd., Type AB	AR
46	SC-117-76	Mach. Screw M4 x 0.7 x 8MM Slotted Cheese Hd.	AR
47	WL-019-20	Lockwasher #8 External Shakeproof	AR
48	00-292517	Screw – Slide Rod	2
49	SD-005-20	Self-Tapping Screw Rd. Hd., Type U	1
50	00-292554	Switch – On/Off	1
51	00-292524	Bar – Flat	1
52	SD-036-41	Self-Tapping Screw M6 x 1.0 x 15 MM Hex Hd., Type TT	AR
53	00-292496	Foot – Rubber	4

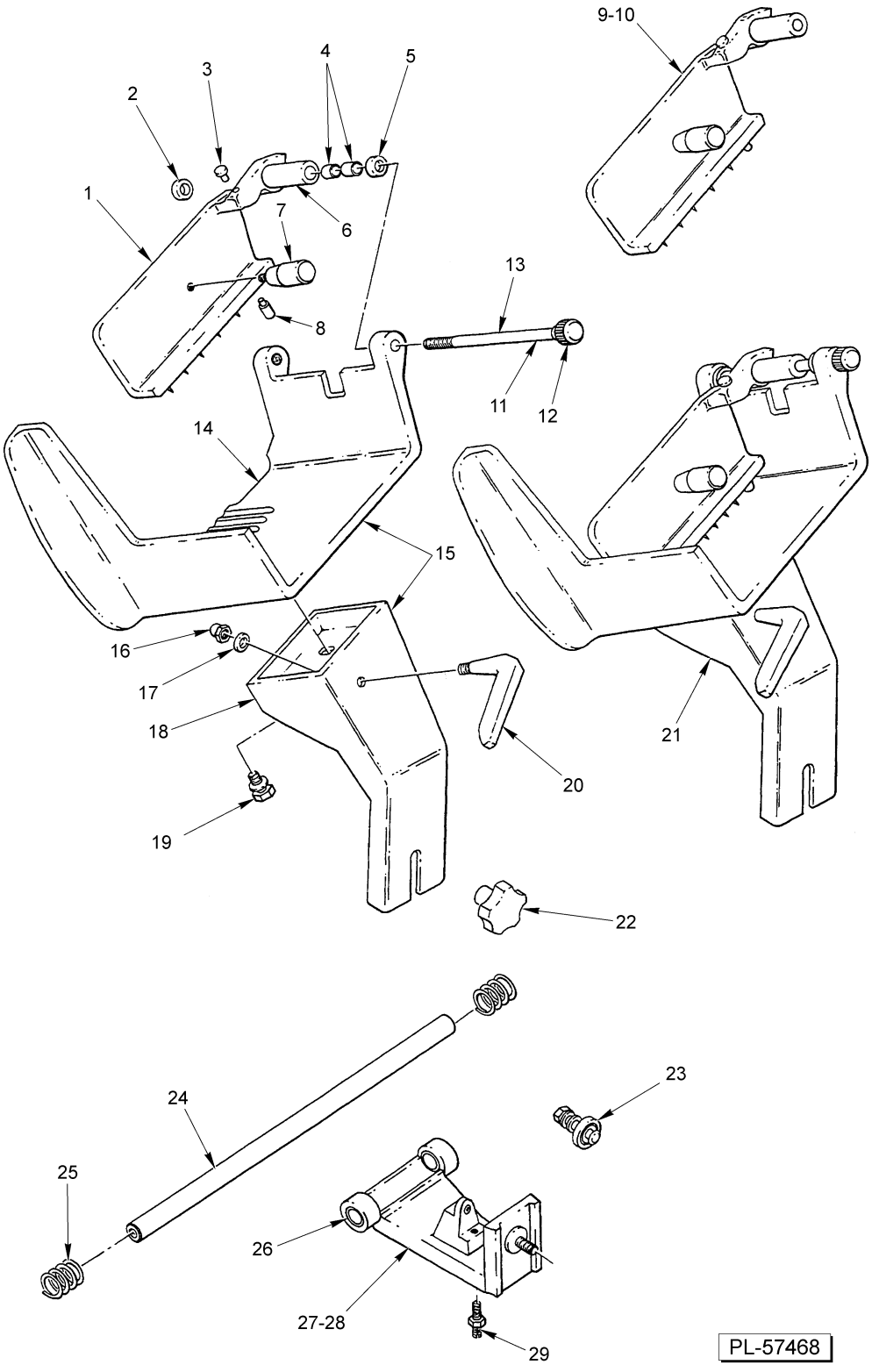
9-10
4
5
3
2
1
7
6
13
8
11
12
14
15
16
17
18
21
20
19
22
24
23
25
26
27-28
29
PL-57468

CARRIAGE

CARRIAGE

ILLUS. PL-57468	PART NO.	NAME OF PART	AMT.
1	00-292537	Grip – Meat	1
2	00-292530	Washer – Rubber	2
3	00-292531	Button – Stop	1
4	00-292532	Bushing – Meat Grip	2
5	00-292530	Washer – Rubber	2
6	00-292533	Rod – Meat Grip	1
7	00-292534	Handle – Grip	1
8	00-292535	Button – Slide	1
9	00-292529	Pin – Meat Grip	1
10	00-292541	Meat Grip Assy. (Incls. Items 1 thru 9)	1
11	00-292539	Rod – Meat Grip	1
12	00-292540	Knob – Meat Grip Rod	1
13	00-292552	Rod & Knob Assy. (Incls. Items 11 & 12)	1
14	00-292538	Tray – Meat Grip	1
15	00-292842	Tray & Support Arm Assy. (Incls. Items 14, 18, & 19)	1
16	NS-200-02	Nut M8 x 1.25 Hex	1
17	WL-019-56	Lockwasher #8 External	1
18	00-292545	Support – Tray	1
19	00-292547	Screw and Washer	1
20	00-292640	Knob – Grip Rod	1
21	00-292548	Grip & Support Tray Assy. (Incls. Items 10, 13, & 15)	1
22	00-292546	Knob – Tray Support	1
23	00-292550	Bearing & Mounting Hardware	1
24	00-292519	Rod – Slide	1
25	00-292518	Spring – Rod	2
26	00-292520	Bushing – Carriage	2
27	00-292521	Carriage	1
28	00-292549	Carriage & Bushing Assy. (Incls. Items 26 & 27)	1
29	00-292551	Stud & Nut	1

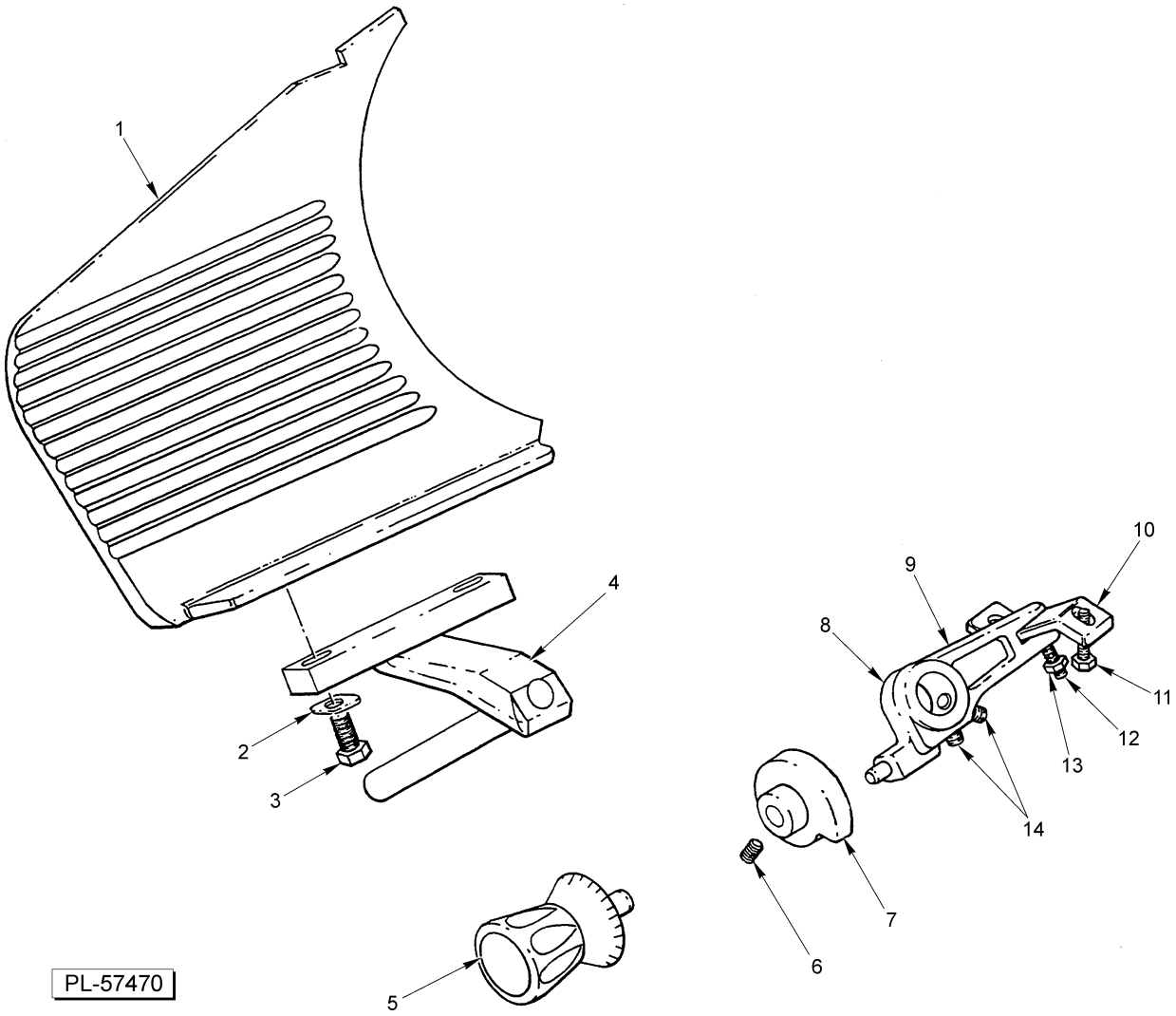

GUAGE PLATE AND INDEXING MECHANISM

ILLUS. PL-57470	PART NO.	NAME OF PART	AMT.
1	00-292501	Plate – Gauge	1
2	00-292507	Washer	2
3	SC-200-07	Cap Screw M8 x 1.25 x 25MM Hex Hd.	2
4	00-292502	Support Assy. – Gauge Plate	1
5	00-292506	Knob – Gauge Plate	1
6	SC-117-36	Set Screw M6 x 1.0 x 8MM Hdls., Cup Pt	1
7	00-292503	Cam – Index	1
8	00-292498	Index Arm Assy. (Incls. Items 9 thru 14)	1
9	00-292568	Arm – Index	1
10	00-292522	Guide – Index Arm	1
11	00-292516	Screw M6 x 12	1
12	00-292515	Set Screw M6 x 15	1
13	00-292514	Nut M6	1
14	00-292512	Set Screw M6 x 8	2

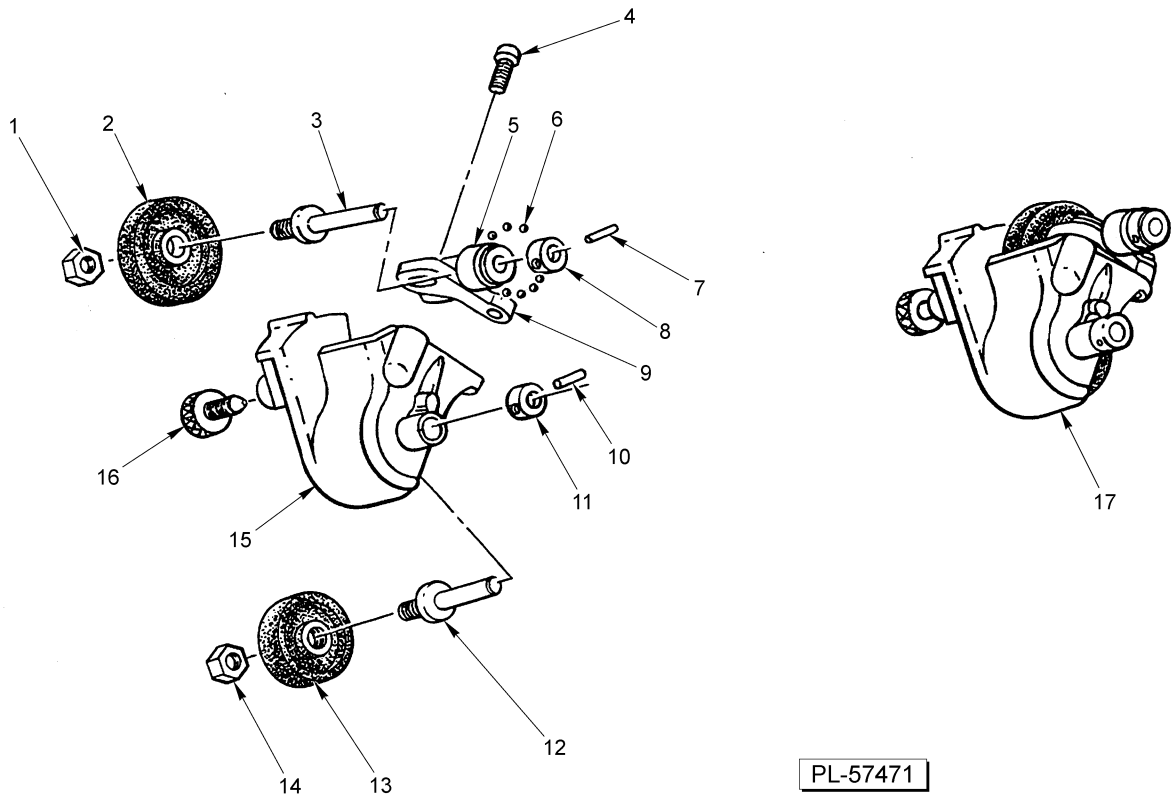

KNIFE SHARPENER

ILLUS. PL-57471	PART NO.	NAME OF PART	AMT.
1	NS-200-02	Nut M8 x 1.25 Hex	1
2	00-018880	Wheel – Grinding	1
3	00-292617	Shaft – Grinding Wheel	1
4	00-292620	Screw	2
5	WS-003-40	Washer	1
6	BA-002-01	Ball 0.125	9
7	RP-006-07	Pin – Roll	1
8	00-013199	Collar – Grinding & Truing Shaft	1
9	00-292630	Grinding Wheel Carrier Assy. (Incls. Items 5 thru 8)	1
10	RP-006-07	Pin – Roll	1
*11	-	Collar – Thrust	1
12	00-292615	Shaft – Truing Wheel	1
13	00-018881	Wheel – Truing	1
14	NS-200-02	Nut M8 x 1.25 Hex	1
15	00-292613	Carrier – Truing Wheel	1
16	00-292614	Screw – Thumb	1
17	00-292618	Sharpener Assy. (Incls. Items 1, 2, & 9 thru 16)	1

* Service Part Not Available, Use Item 17.

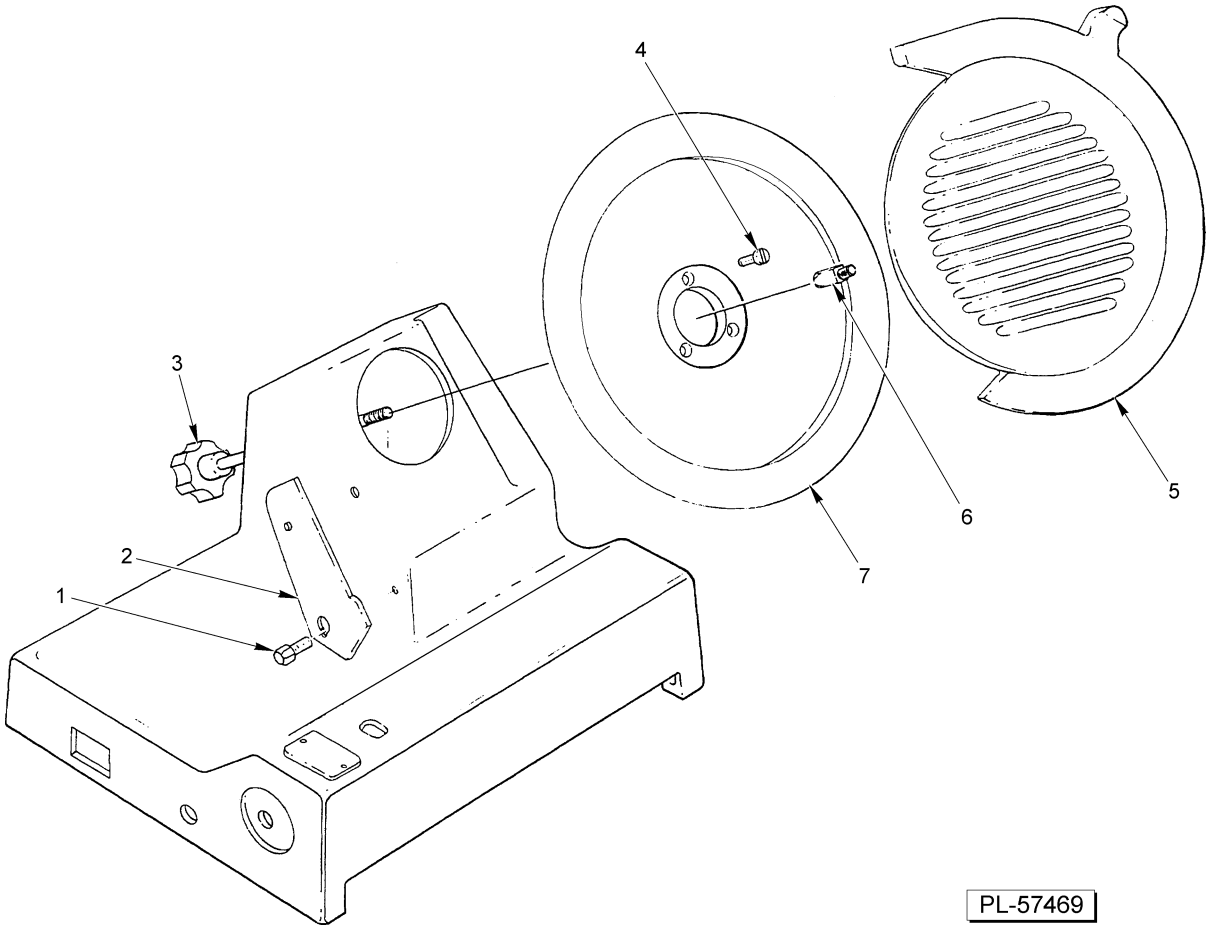

KNIFE

ILLUS. PL-57469	PART NO.	NAME OF PART	AMT.
1	00-292509	Screw – Thumb	1
2	00-292504	Deflector	1
3	00-292497	Knob – Locking	1
4	SC-117-77	Mach. Screw M5 x 0.8 x 12MM Slotted Flat Hd. (SST)	3
5	00-292500	Guard – Knife	1
6	00-292505	Coupler	1
7	00-292499	Knife	1