CATALOG OF REPLACEMENT PARTS



AM14-SERIES DISHWASHERS

ML-32614	**AM14**
ML-110976	**AM14**
ML-32615	**AM14C**
ML-110977	**AM14C**
ML-110025	**AM14P**

A product of HOBART 701 S. RIDGE AVENUE TROY, OHIO 45374-0001

FORM 19272 Rev. E (February 2018)

 © HOBART 2018

Table of Contents

5 CONTROL BOX (W/PLASTIC LID) (ML-32614, ML-32615, & ML-110025)
9 CONTROL BOX (W/METAL LID)(PREVIOUS CONSTRUCTION)
13 CONTROL BOX(CURRENT CONSTRUCTION)
15 CONTROL BOX ELECTRICAL COMPONENTS (CURRENT CONSTRUCTION)
17 MOTOR AND PUMP
19 MOTOR (PRIOR TO AM14 SERIAL NO. 23-1037-280)
21 MOTOR (GE) (AM14 USED AFTER SERIAL NO. 23-1037-280)
23 LOWER WASH ARM
25 UPPER WASH ARM
27 OUTSIDE RINSE PIPING(EARLIER PREV. CONSTR.) (ML-32614,ML-32615 & ML-110025)
29 OUTSIDE RINSE PIPING (PREV. CONSTRUCTION) (ML-32614, ML-32615 & ML-110025)
31 OUTSIDE RINSE PIPING(CURRENT CONSTRUCTION) (ML-32614,ML-32615 & ML-110025)
33 BOOSTER AND PIPING (ML-32614, ML-32615, & ML-110025)
35 BOOSTER TANK (ML-110976 & ML-110977)
37 OUTSIDE RINSE PIPING W/BOOSTER (ML-110976 & ML-110977)
39 OUTSIDE RINSE PIPING W/O BOOSTER (ML-110976 & ML-110977)
41 DOOR (STRAIGHT-THRU)
43 DOOR AM14C (CORNER)
45 DOOR INTERLOCK
47 DOOR LIFT AM14 & 14P (STRAIGHT-THRU)
49 DOOR LIFT AM14C (CORNER)
51 INSIDE RINSE PIPING
53 STRAINER AND DRAIN
55 LOW WATER PROTECTION & HEAT BOX (STEAM & ELECTRIC HEAT)
57 LOW WATER PROTECTION & TRANSFORMER BOX (GAS HEAT)
59 GAS HEAT CONTROL BOX
61 ELECTRIC HEAT
63 GAS HEAT COMPONENTS (CURRENT CONSTRUCTION)
67 GAS HEAT IMMERSION TUBE SHROUD AND FLUE
69 GAS BURNER (PREVIOUS CONSTRUCTION)
73 FLUE AND IGNITER CONTROL (GAS HEAT)(PREVIOUS CONSTRUCTION)
75 STEAM INJECTOR (ML-32614, ML-32615, & ML-110025)
77 STEAM COIL PIPING (ML-32614, ML-32615, & ML-110025)
79 STEAM COILS (ML-32614, ML-32615, & ML-110025)
81 TRACK UNIT
83 VENT FAN CONTROL (PREVIOUS CONSTRUCTION)
85 MISCELLANEOUS
87 DISH RACKS

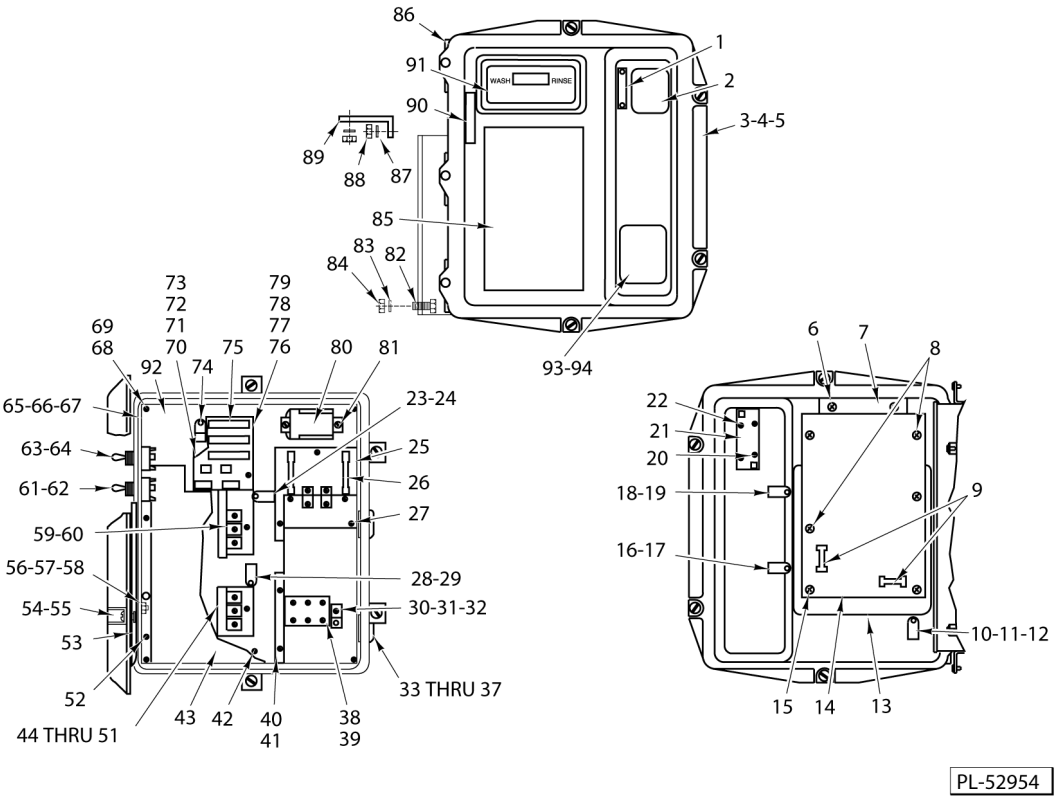

CONTROL BOX
(W/PLASTIC LID)
(ML-32614, ML-32615, & ML-110025)

CONTROL BOX
(W/PLASTIC LID)
(ML-32614, ML-32615, & ML-110025)

ILLUS. PL-52954	PART NO.	NAME OF PART	AMT.
1	00-289089	Label - Switch	1
2	00-120872-00003	Switch - Operator's Select	1
3	00-112068	Gasket - Control Box Lid	1
4	00-475007-00001	Lid & Gasket Assy. (Incls. Items 1, 3, 6, 7, 13, 53, 54, 55, 85, 90, 91, & 93)	1
5	00-475007-00002	Lid & Gasket Assy.(W/Booster)(Incls. Items 1,3,6,7,13,53,54,55,85,90, 91, & 94)	1
6	SD-012-30	Self-Tapping Screw 6-32 x 5/16 Phil. Pan Hd., Type T	4
7	00-289087	Retainer - Display	1
8	SD-012-04	Self-Tapping Screw 8-32 x 3/8 Phil. Truss Hd., Type T	4
9	FE-009-26	Fuse - Glass (250 V., 1.5 Amp.) (Type AGC)	2
10	00-078752-00010	Clamp - Retaining	1
11	WL-006-07	Lockwasher #10 Helical (SST)	1
12	SC-066-22	Mach. Screw 10-32 x 3/8 Phil. Truss Hd	1
13	00-289129	Shield - Static	1
14	00-749670	Board - Control Assy. (AM14)	1
15	SC-066-22	Mach. Screw 10-32 x 3/8 Phil. Truss Hd	2
16	00-078752-00010	Clamp - Retaining	1
17	SD-012-04	Self-Tapping Screw 8-32 x 3/8 Phil. Truss Hd., Type T	1
18	00-078752-00004	Retainer (7/16 In.)	1
19	SD-012-04	Self-Tapping Screw 8-32 x 3/8 Phil. Truss Hd., Type T	1
20	SD-009-04	Self-Tapping Screw 6-32 x 3/4 Phil. Pan Hd., Type F	2
21	00-294854	Reed Mounting Board Assy	1
22	SD-012-04	Self-Tapping Screw 8-32 x 3/8 Phil. Truss Hd., Type T	2
23	00-078752-00009	Clamp - Cable	1
24	SD-008-25	Self-Tapping Screw 10-16 x 1/2 Phil. Pan Hd., Type B	1
25	00-294488	Board - Detergent/Rings Feeder	1
26	FE-021-11	Fuse (5 Amp.)	2
27	SD-008-18	Self-Tapping Screw 8-18 x 3/8 Phil. Bndg. Hd., Type B	3
28	00-078752-00010	Clamp - Retaining	1
29	SD-008-25	Self-Tapping Screw 10-16 x 1/2 Phil. Pan Hd., Type B	1
30	00-118544-00001	Lug - Solderless	1
31	SD-008-25	Self-Tapping Screw 10-16 x 1/2 Phil. Pan Hd., Type B	1
32	WL-007-12	Lockwasher 10 External Shakeproof	1
33	00-119244	Cap & Stud Assy	2
34	00-119254	Retainer - Cap & Stud	2
35	00-067500-00031	O-Ring	2
36	WL-006-17	Lockwasher 1/4 Helical (SST)	2
37	NS-015-01	Nut 1/4-20 Hex (SST)	2
38	00-294325-003-1	Block - Terminal	1
39	SD-029-11	Self-Tapping Screw 6-32 x 1 Phil. Pan Hd., Type F	2
40	00-294503	Barrier - Field Wiring	1
41	SD-008-25	Self-Tapping Screw 10-16 x 1/2 Phil. Pan Hd., Type B	2
42	SD-008-18	Self-Tapping Screw 8-18 x 3/8 Phil. Bndg. Hd., Type B (Cable Harness Grd.)	1
43	00-294502	Barrier - Contactor	1
44	00-087713-065-1	Contactor - Magnetic (3 Pole) (Gas or Electric Heat)	1
45	SD-008-25	Self-Tapping Screw 10-16 x 1/2 Phil. Pan Hd., Type B	2
46	00-294436-00002	Fuse Block (Gas Heat)	1
47	FE-015-01	Fuse (1.5 Amp., 100-120 V. & 200-240 V.) (Gas Heat)	1
48	FE-022-74	Fuse (0.6 Amp., 380-460 V.) (Gas Heat)	1
49	SD-019-31	Self-Tapping Screw 8-18 x 1/2 Phil. Pan Hd., Type B	2
50	00-087714-007-1	Relay - D.P.D.T. 24 VAC (Gas Heat)	2
51	SD-008-18	Self-Tapping Screw 8-18 x 3/8 Phil. Bndg. Hd., Type B	4
52	SD-008-25	Self-Tapping Screw 10-16 x 1/2 Phil. Pan Hd., Type B	2
53	00-112016	Retainer - Captive Screw	4
54	00-112129	Screw - Captive	4
55	00-112169	Spacer - Lid	4

CONTROL BOX
(W/PLASTIC LID)
(ML-32614, ML-32615, & ML-110025)

ILLUS. PL-52954	PART NO.	NAME OF PART	AMT.
56	00-078752-00001	Clamp - Retaining	1
57	WL-006-07	Lockwasher #10 Helical (SST)	1
58	NS-011-18	Nut 10-24 Hex (SST)	1
59	00-087713-065-1	Contactor - Magnetic (3 Pole) (Electric Heat)	1
60	SD-008-25	Self-Tapping Screw 10-16 x 1/2 Phil. Pan Hd., Type B	2
61	00-087711-147-1	Switch - Toggle	1
62	WL-008-32	Lockwasher 1/2 Internal Shakeproof	1
63	00-087711-180-1	Switch - Toggle (D.P.D.T.) (Keyway Must be Located on Top of Switch)	1
64	WL-008-32	Lockwasher 1/2 Internal Shakeproof	1
65	00-288702	Control Box (RH Controls)	1
66	00-288702-00004	Control Box (LH Controls) (Electric & Steam Heat)	1
67	00-473512	Control Box (LH Gas Heat)	1
68	SC-071-11	Mach. Screw 10-24 x 3/8 Phil. Truss Hd	4
69	WL-007-12	Lockwasher 10 External Shakeproof	4
70	00-294548-00001	Transformer & Fuse Board(100-120/200-230V.,60Hz.,1Ph.)(Incls. Items 76 thru 79)	1
71	00-294548-00002	Transformer & Fuse Board(200-230/400-460 V.,60Hz.,3Ph.)(Incls. Items 76 thru 79)	1
72	00-294548-00003	Transformer & Fuse Board (115 & 220 V., 50 Hz., 1 Ph.) (Incls. Items 76 thru 79)	1
73	00-294548-00004	Transformer & Fuse Board (200-240/380 V., 50 Hz., 3 Ph.) (Incls. Items 76 thru 79)	1
74	SD-008-25	Self-Tapping Screw 10-16 x 1/2 Phil. Pan Hd., Type B	2
75	FE-021-19	Fuse (3.2 Amp., 250 V.)	2
76	00-294489	Fuse Board Assy	1
77	SC-019-33	Mach. Screw 8-32 x 1/2 Bndg. Hd	2
78	WL-007-07	Lockwasher #8 External Shakeproof	2
79	NS-009-12	Nut 8-32 Hex	2
80	00-087714-007-1	Relay (24 VAC) (D.P.D.T.) (Steam/Electric Heat)	1
81	SD-008-18	Self-Tapping Screw 8-18 x 3/8 Phil. Bndg. Hd., Type B	2
82	SC-041-11	Cap Screw 5/16-18 x 3/4 Hex Hd. (SST)	2
83	WL-006-23	Lockwasher 5/16 Helical (SST)	2
84	NS-015-11	Nut 5/16-18 Hex (SST)	2
85	00-289088	Label - Data	1
86	00-289360	Pin - Control Box	3
87	WL-006-16	Lockwasher 1/4 Light (RH Controls)	2
88	NS-015-01	Nut 1/4-20 Hex (RH Controls)	2
89	00-119114	Bracket - Control Box (RH Controls)	1
90	00-289090	Label - Switch	1
91	00-289060	Water Temperature Display Assy	1
92	00-162477	Plate - Base	1
93	00-438131-00042	Label - Caution/Warning	1
94	00-438131-00060	Label - Warning (Electric Heat W/Booster)	1
	00-294325-00006	Jumper - Terminal Block(110-120/200-230V.60Hz.,115/220V.50Hz.)(1Ph.)(Use w/ Item 38)	1
	00-293587-00001	Wire Harness (Used with Item 14)	1
	00-160746-00001	Terminal - Insulated (Used with Item 80)	2
	00-294334	Shunt Connector (Pkg. of 10)	1
	00-473511	Bracket - Control Box (LH)	1

NOTES

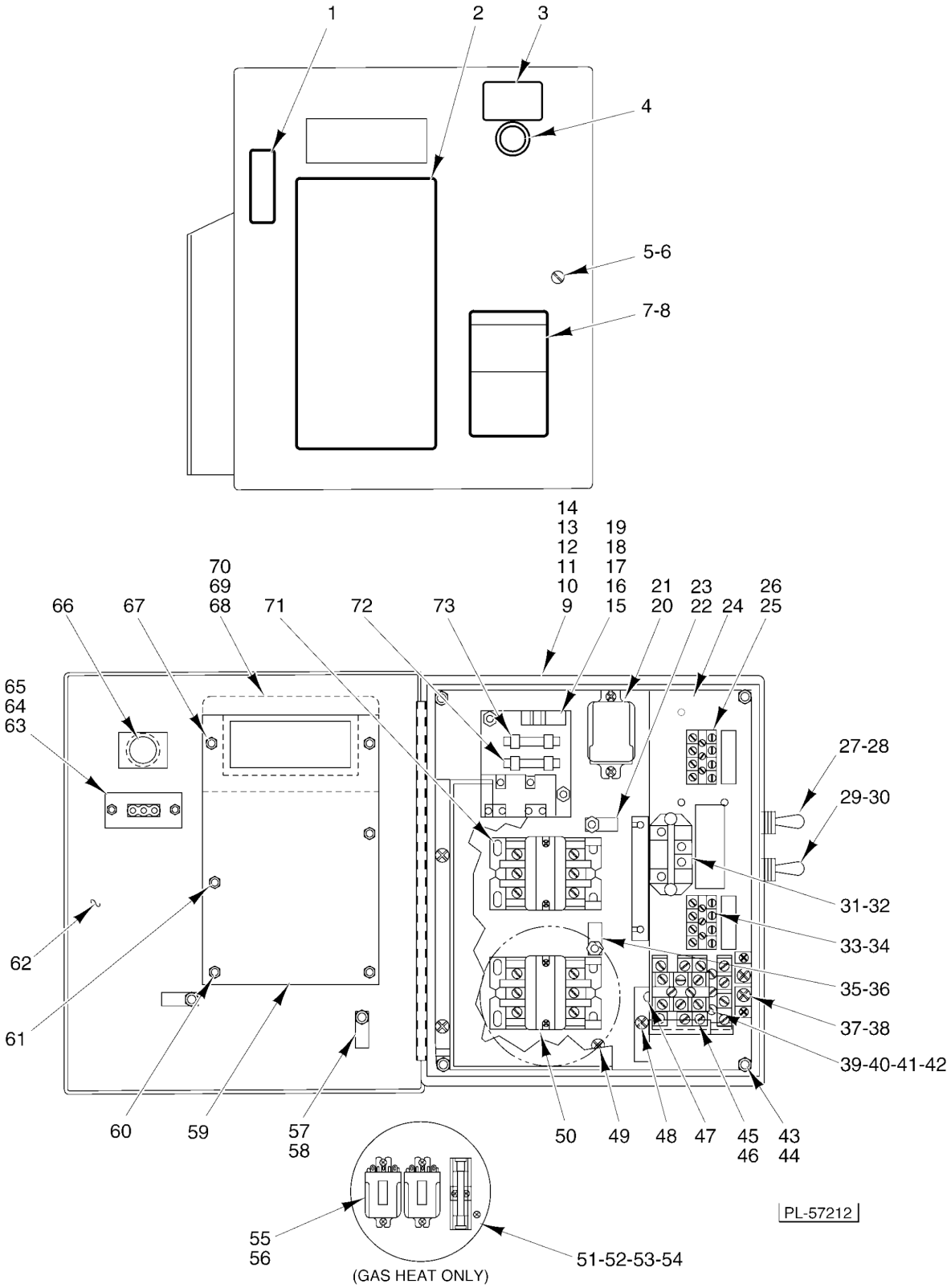

CONTROL BOX
(W/METAL LID)(PREVIOUS CONSTRUCTION)

CONTROL BOX
(W/METAL LID)(PREVIOUS CONSTRUCTION)

ILLUS. PL-57212	PART NO.	NAME OF PART	AMT.
1	00-289090	Label - Switch	1
2	00-289088	Label - Data	1
3	00-748965	Label - Switch	1
4	00-475638-00003	Button - Push (Flush)	1
5	00-112129	Screw - Captive	1
6	00-112016	Retainer - Captive Screw	1
7	00-438131-00042	Label - W arning (W/O Booster)	1
8	00-438131-00060	Label - Warning (W/Booster)	1
9	00-475213-00001	Box - Control (W/Lid) (RH) (Gas Heat)	1
10	00-475213-00002	Box - Control (W/Lid) (LH) (Gas Heat)	1
11	00-475213-00003	Box - Control (W/Lid) (LH) (90 Deg. Mtd.) (Gas Heat)	1
12	00-475213-00007	Box - Control (W/Lid) (RH) (Electric Heat)	1
13	00-475213-00008	Box - Control (W/Lid) (LH) (Electric Heat)	1
14	00-475213-00009	Box - Control (W/Lid) (LH) (90 Deg. Mtd.) (Electric Heat)	1
15	00-294548-00001	Transformer & Fuse Board (120/60/1) (208-240/60/1)	1
16	00-294548-00003	Transformer & Fuse Board (100-120/50/1) (220-240/50/1)	1
17	00-294548-00002	Transformer & Fuse Board Assy. (208-240/60/3) (480/60/3)	1
18	00-294548-00004	Transformer & Fuse Board Assy. (200-240/50/3) (380-415/50/3)	1
19	SD-008-25	Self-Tapping Screw 10-16 x 1/2 Phil. Pan Hd., Type B	2
20	00-087714-007-1	Relay (24 VAC) (D.P.D.T.) (Steam/Electric Heat)	1
21	SD-008-18	Self-Tapping Screw 8-18 x 3/8 Phil. Bndg. Hd., Type B	2
22	00-294677-00003	Clamp - Wire (3/4 I.D.)	1
23	SD-008-25	Self-Tapping Screw 10-16 x 1/2 Phil. Pan Hd., Type B	1
24	00-476764	Plate - Base	1
25	00-294325-013-4	Block - Terminal (Under 250 Volts)	1
26	SD-019-29	Self-Tapping Screw 6-20 x 1/2 Phil Pan Hd., Type B	2
27	00-087711-180-1	Switch - Toggle (D.P.D.T.) (Keyway Must be Located on Top of Switch)	1
28	WL-008-32	Lockwasher 1/2 Internal	1
29	00-087711-147-1	Switch - Wash/Rinse (Keyway Must be Located on Bottom of Switch)	1
30	WL-008-32	Lockwasher 1/2 Internal	1
31	00-087714-055-1	Relay (Vent Fan Control)	1
32	SD-008-18	Self-Tapping Screw 8-18 x 3/8 Phil. Bndg. Hd., Type B	2
33	00-294325-013-4	Block - Terminal (Under 250 Volts)	1
34	SD-019-29	Self-Tapping Screw 6-20 x 1/2 Phil. Pan Hd., Type B	2
35	00-294677-00003	Clamp - Wire (3/4 I.D.)	1
36	SD-008-25	Self-Tapping Screw 10-16 x 1/2 Phil. Pan Hd., Type B	1
37	00-118544-00001	Lug - Solderless	2
38	SD-034-59	Self-Tapping Screw 10-32 x 3/8 Phil. Pan Hd., Type T	2
39	00-294325-003-1	Block - T erminal (Initial Production Only)	1
40	00-294325-015-1	Block - Terminal (Used in Production Since 4/01)	2
41	00-294325-00006	Jumper - Terminal Block (1 Ph. Only)	1
42	SD-029-11	Self-Tapping Screw 6-32 x 1 Phil. Pan Hd., Type F	2
43	SC-071-11	Mach. Screw 10-24 x 3/8 Phil. Truss Hd	4
44	WL-007-12	Lockwasher 10 External Shakeproof	4
45	00-119031	Terminal Block	1
46	SD-008-25	Self-Tapping Screw 10-16 x 1/2 Phil. Pan Hd., Type B	4
47	00-475256	Barrier - Field Wiring	1
48	SD-008-25	Self-Tapping Screw 10-16 x 1/2 Phil. Pan Hd., Type B	7
49	SD-034-59	Self-Tapping Screw 10-32 x 3/8 Phil. Pan Hd., Type T	7
50	00-087713-065-1	Contactor - Magnetic (3 Pole) (Electric Heat)	2
51	FE-015-01	Fuse (1.5 Amp., 100-120 V.) (Gas Heat)	1
52	FE-022-86	Fuse (0.6 Amp., 500 V.) (Gas Heat)	1
53	00-294436-00002	Fuse Block (3 Pole) (Gas Heat)	1
54	SD-019-31	Self-Tapping Screw 8-18 x 1/2 Phil. Pan Hd., Type B	2
55	00-087714-007-1	Relay (24 VAC) (D.P.D.T.) (Steam/Electric Heat)	2

CONTROL BOX
(W/METAL LID)(PREVIOUS CONSTRUCTION)

ILLUS. PL-57212	PART NO.	NAME OF PART	AMT.
56	SD-008-18	Self-Tapping Screw 8-18 x 3/8 Phil. Bndg. Hd., Type B	4
57	00-294677-00003	Clamp - Wire (3/4 I.D.)	2
58	NS-031-15	Stop Nut - Special 10-24 Hex (SST)	2
59	00-749825	Board - Control Assy. (AM14)	1
60	00-118349-00005	Standoff - Reed Board	4
61	NS-031-50	Stop Nut 6-32 Hex (SST)	4
62	00-526454-00002	Foam Tape	1
63	00-294325-00009	Terminal Board	1
64	NS-031-50	Stop Nut 6-32 Hex (SST)	2
65	00-118349-00003	Spacer - Control Panel	2
66	00-475934	Block - Contact (Push-On Maintain)	1
67	00-118349-00003	Spacer - Control Panel	2
68	00-474669	Frame - Display	1
69	00-474670	Retainer - Display	1
70	00-289060	Water Temperature Display Assy	1
71	00-087713-065-1	Contactor - Magnetic (3 Pole) (Electric Heat)	1
72	FE-009-26	Fuse - Glass (250 V., 1.5 Amp.) (Type AGC)	1
73	FE-021-19	Fuse (3.2 Amp., 250 V.)	1
	00-476772	Board Assy. - Thermistor Simulator	1

NOTES

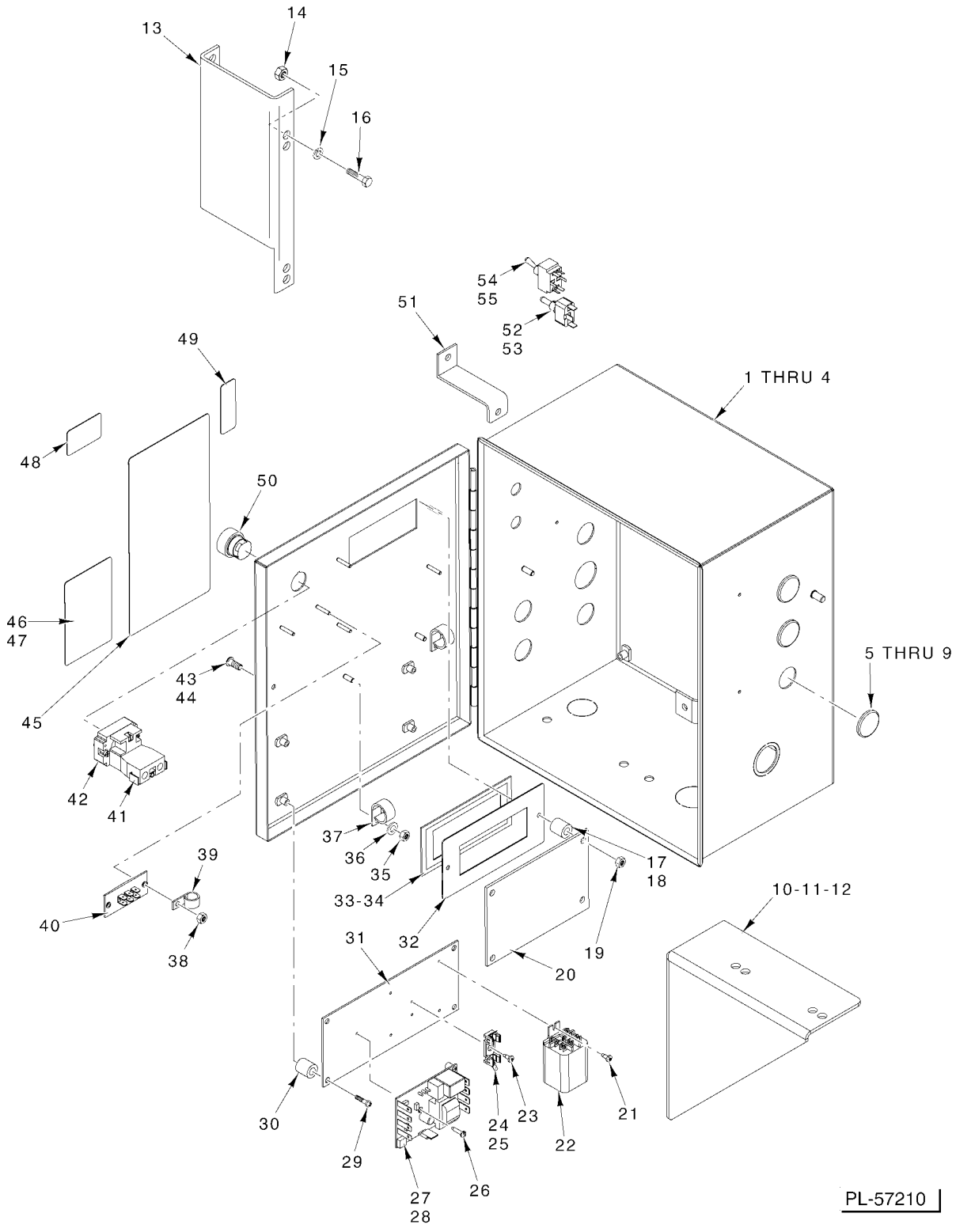

CONTROL BOX(CURRENT CONSTRUCTION)

CONTROL BOX(CURRENT CONSTRUCTION)

ILLUS. PL-57210	PART NO.	NAME OF PART	AMT.
1	00-749634-00001	Weldment - Box & Lid (ML-110976 & ML-110977)	1
2	SC-041-11	Cap Screw 5/16-18 x 3/4 Hex Hd. (SST)	4
3	WS-017-08	Washer (0.328 x 0.625 x 0.062) (SST)	4
4	NS-036-19	Stop Nut 5/16-18 Hex	4
5	00-119244	Cap & Stud Assy	3
6	00-119254	Retainer - Cap & Stud	3
7	00-767500-00031	O-Ring	3
8	WL-006-17	Lockwasher 1/4 Helical (SST)	3
9	NS-015-01	Nut 1/4 - 20 Hex (SST)	3
10	00-749873	Bracket - Control Box	1
11	SC-041-11	Cap Screw 5/16-18 x 3/4 Hex Hd. (SST)	2
12	NS-036-19	Stop Nut 5/16-18 Hex	2
13	00-748054	Bracket - Gas Heat (LH)	1
14	NS-015-11	Nut 5/16-18 Hex (SST)	2
15	WL-006-23	Lockwasher 5/16 Helical (SST)	2
16	SC-041-11	Cap Screw 5/16-18 x 3/4 Hex Hd. (SST)	2
17	00-118349-00006	Standoff - Reed Board (5/16)	2
18	00-118349-00007	Standoff - Reed Board (3/8)	2
19	NS-031-50	Stop Nut 6-32 Hex (SST)	4
20	00-749825	Board - Control Assy	1
21	SD-008-17	Self-Tapping Screw 6-20 x 3/8 Phil. Bndg. Hd., Type B (Gas Heat/Vent Fan Control)	2
22	00-087714-020-1	Relay (3 Pole) (Vent Fan Control)	1
23	SD-008-17	Self-Tapping Screw 6-20 x 3/8 Phil. Bndg. Hd., Type B (Electric Booster)	1
24	00-294436-00003	Block - Fuse (Electric Booster)	1
25	FE-022-28	Fuse (0.5 Amp., 250 V.) (Electric Booster)	1
26	SD-038-02	Self-Tapping Screw 6-20 x 5/8 Phil. Pan Hd., Type B (Electric Booster)	3
27	00-475458-00001	Board Assy. - Temperature Control (120-200 Deg. F) (Electric Booster)	1
28	00-476653	Spacer - Circuit Board #6 x 5/16 (Electric Booster)	4
29	SC-071-11	Mach. Screw 10-24 x 3/8 Phil. Truss Hd	4
30	00-118349-00006	Standoff - Reed Board (5/16)	4
31	00-749636	Plate - Base Lid (Electric Booster or Vent Fan Control)	1
32	00-474669	Frame - Display	1
33	00-289060	Water Temperature Display Assy	1
34	00-474670	Retainer - Display	1
35	NS-031-50	Stop Nut - Special 6-32 Hex (SST)	3
36	WS-023-01	Washer (SST)	2
37	00-294677-00003	Clamp - Wire (3/4 I.D.)	3
38	NS-031-50	Stop Nut 6-32 Hex (SST)	2
39	00-294677-00002	Clamp - Wire (1/2 I.D.)	1
40	00-294325-00009	Terminal Board Assy	1
41	00-087711-286-1	Block - Switch (Electric Booster)	1
42	00-475934	Block - Contact (Push-On-Maintain)	1
43	00-112016	Retainer - Screw	1
44	00-112129	Screw - Captive	1
45	00-289088	Label - Data (ML-110976 & ML-110977)	1
46	00-438131-00060	Label - Warning (Electric Heat W/Booster)	1
47	00-438131-00042	Label - Warning (W/O Booster or Gas Heat)	1
48	00-748965	Label - Switch	1
49	00-289090	Label - Switch	1
50	00-475638-00001	Button - Push (Flush)	1
51	00-749909	Bracket - Control Box	1
52	00-087711-147-1	Switch - Wash/Rinse (Keyway Must be Located on Bottom of Switch)	1
53	WL-008-32	Lockwasher 1/2 Internal Shakeproof	1
54	00-087711-180-1	Switch - Toggle (D.P.D.T.) (Keyway Must be Located on Top of Switch)	1
55	WL-008-32	Lockwasher 1/2 Internal Shakeproof	1
	00-749887-00001	Cable Assy. - Rinse Thermistor	1
	00-749853-00001	Harness - Wiring, HT Therm. RH	1

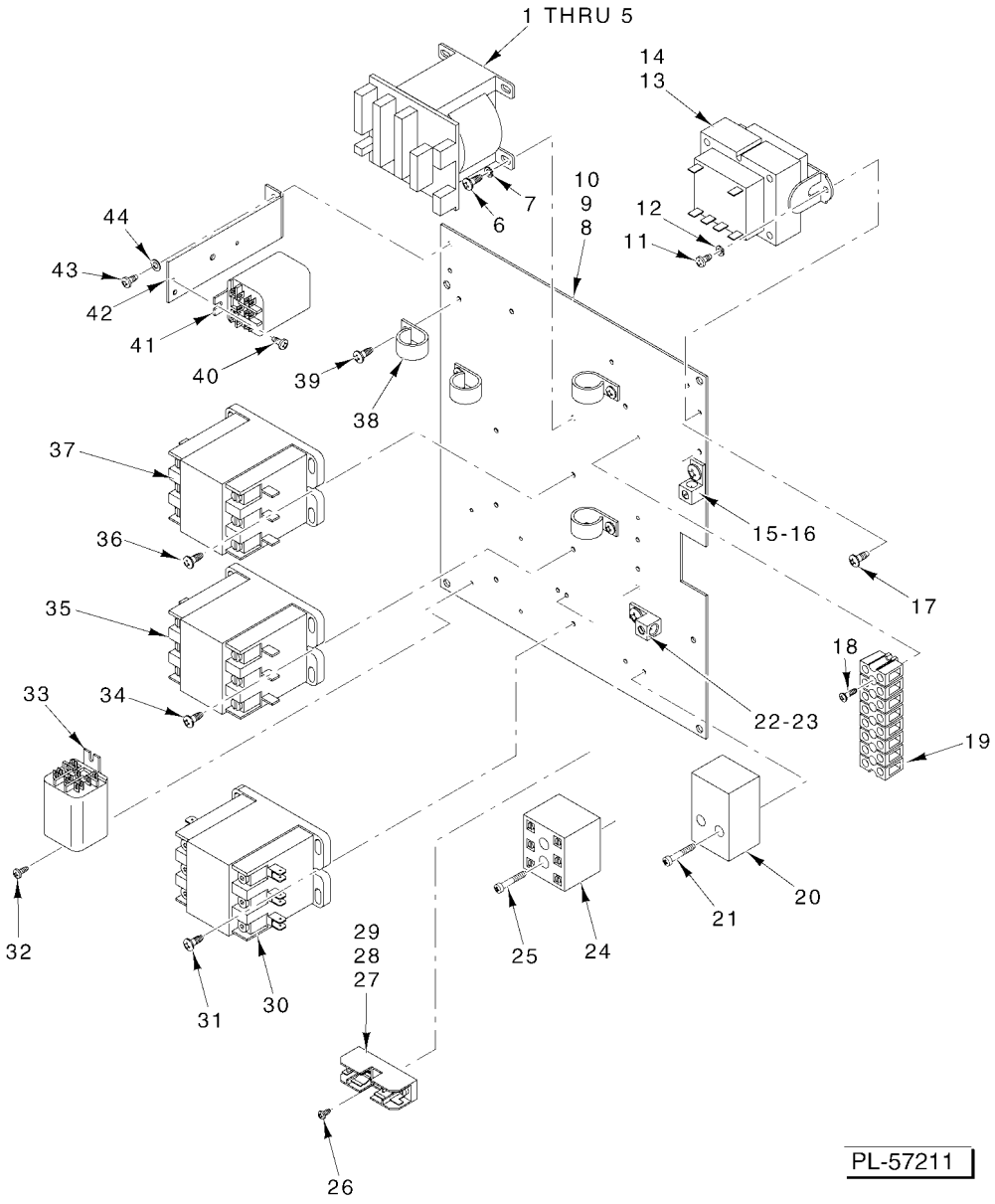

CONTROL BOX ELECTRICAL COMPONENTS
(CURRENT CONSTRUCTION)

CONTROL BOX ELECTRICAL COMPONENTS (CURRENT CONSTRUCTION)

ILLUS. PL-57211	PART NO.	NAME OF PART	AMT.
1	00-422905-00047	Angle - Hinge Pin (Use with Service Side Door)	1
2	00-294548-00002	Transformer (200-230 V. & 400-460 V., 60 Hz., 3 Ph.)	1
3	00-294548-00004	Transformer (200-415 V., 50 Hz., 3 Ph.)	1
4	FE-021-19	Fuse (3.2 Amp., 250 V.)	1
5	FE-009-26	Fuse (1.5 Amp., 250 V.)	1
6	SD-008-25	Self-Tapping Screw 10-16 x 1/2 Phil. Pan Hd., Type B	2
7	WL-007-12	Lockwasher #10 External	2
8	00-749630	Plate - Base	1
9	SC-071-11	Mach. Screw 10-24 x 3/8 Phil. Truss Hd	4
10	WL-007-12	Lockwasher 10 External Shakeproof	4
11	SD-008-18	Self-Tapping Screw 8-18 x 3/8 Phil. Bndg. Hd., Type B (Electric Booster)	2
12	WL-014-05	Lockwasher #8 External	2
13	00-294500-00033	Transformer(60 VA)(208/240/60/1)(208/240/60/3)(480/60/3)(200/50/3)(Electric Booster)	1
14	00-294500-033-2	Transformer (60 VA)(380-415/50/3) (Electric Booster)	1
15	00-116544-00002	Lug - Grounding	2
16	SD-035-77	Self-Tapping Screw Phil. Pan Hd., Type TT	2
17	SD-008-25	Self-Tapping Screw 10-16 x 1/2 Phil. Pan Hd., Type B (Electric Booster)	1
18	SD-008-17	Self-Tapping Screw 6-20 x 3/8 Phil. Bndg. Hd., Type B	2
19	00-294325-013-6	Block - Terminal	1
20	00-294325-015-1	Block - Terminal (1 Ph.) (Electric Booster)	1
21	SD-037-21	Self-Tapping Screw 8-32 x 1 Phil. Pan Hd., Type F (1 Ph.) (Electric Booster)	2
22	00-118544-00002	Lug - Grounding (Electric Booster)	1
23	SD-035-77	Self-Tapping Screw 1/4-20 x 3/8 Phil. Pan Hd., Type TT (Electric Booster)	1
24	00-294325-015-1	Block - Terminal	1
25	SD-037-21	Self-Tapping Screw 8-32 x 1 Phil. Hd., Type F	2
26	SD-008-18	Self-Tapping Screw 8-18 x 3/8 Phil. Bndg. Hd., Type B (Gas Heat)	2
27	00-294436-00002	Block - Fuse (Gas Heat)	1
28	FE-015-01	Fuse (1.5 Amp., 200-240 V.) (Gas Heat)	1
29	FE-022-86	Fuse (0.8 Amp., 380-480 V.) (Gas Heat)	1
30	00-918322	Contactor (40 Amp., 3-Pole) Contactor (40 Amp., 120 V.) (3 Pole) (Electric Booster)	1
31	SD-008-25	Self-Tapping Screw 10-16 x 1/2 Phil. Pan Hd., Type B (Electric Booster)	2
32	SD-008-17	Self-Tapping Screw 6-20 x 3/8 Phil. Bndg. Hd., Type B (Gas Heat)	2
33	00-087714-020-1	Relay (3 Pole) (Gas Heat)	1
34	SD-008-25	Self-Tapping Screw 10-16 x 1/2 Phil. Pan Hd., Type B (Electric Heat)	2
35	00-087713-065-1	Contactor - Magnetic (3 Pole) (Electric Heat)	1
36	SD-008-25	Self-Tapping Screw 10-16 x 1/2 Phil. Pan Hd., Type B	2
37	00-087713-065-1	Contactor - Magnetic (3 Pole)	1
38	00-294677-00003	Clamp - Wire (3/4 I.D.)	4
39	SD-008-25	Self-Tapping Screw 10-16 x 1/2 Phil. Pan Hd., Type B	4
40	SD-008-17	Self-Tapping Screw 6-20 x 3/8 Phil. Bndg. Hd., Type B	2
41	00-087714-020-1	Relay (3 Pole)	1
42	00-437102	Bracket - Relay Mounting	1
43	SD-008-18	Self-Tapping Screw 8-18 x 3/8 Phil. Bndg. Hd., Type B	2
44	WL-014-05	Lockwasher #8 External Shakeproof (SST)	2
	00-476772	Board Assy. - Thermistor Simulator	1

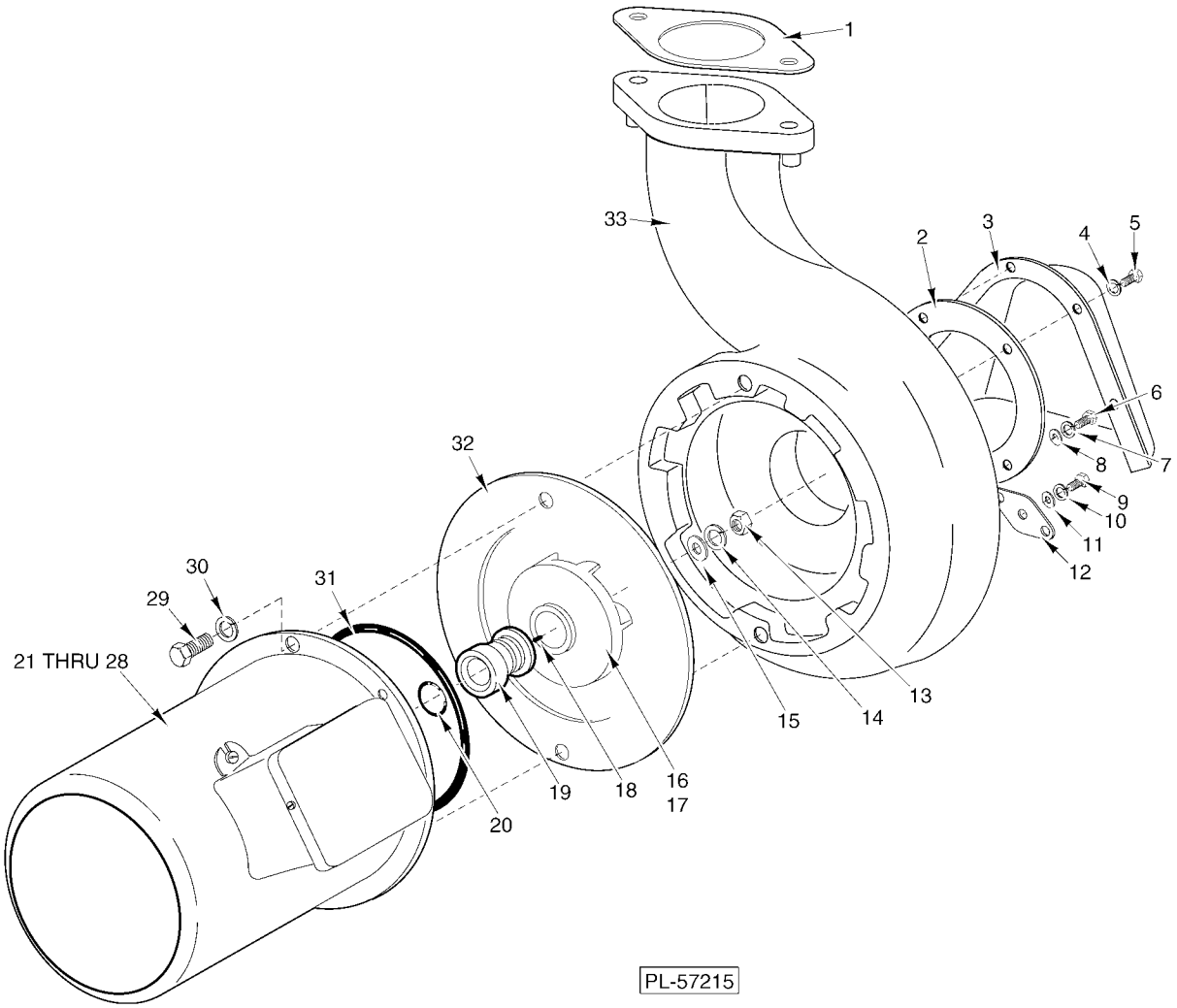

MOTOR AND PUMP

MOTOR AND PUMP

ILLUS. PL-57215	PART NO.	NAME OF PART	AMT.
1	00-119054	Gasket - Pump Discharge	1
2	00-119050	Gasket - Pump Intake	1
3	00-118960	Shroud - Pump Intake	1
4	WL-006-23	Lockwasher 5/16 Helical (SST)	4
5	SC-041-11	Cap Screw 5/16-18 x 3/4 Hex Hd. (SST)	4
6	SC-041-11	Cap Screw 5/16-18 x 3/4 Hex Hd. (SST)	2
7	WL-006-23	Lockwasher 5/16 Helical (SST)	2
8	WS-017-08	Washer (0.328 x 0.625 x 0.062) (SST)	2
9	SC-041-05	Cap Screw 1/4-20 x 5/8 Hex Hd	2
10	WL-006-17	Lockwasher 1/4 Helical (SST)	2
11	WS-003-48	Washer	2
12	00-119051	Gasket - Pump Drain Hole	1
13	NS-024-06	Acorn Nut 7/16-20	1
14	WL-006-32	Lockwasher 7/16 Light	1
15	WS-021-01	Washer	1
16	00-118968	Impeller (60 Hz.)	1
17	00-121567-00002	Impeller (50 Hz.)	1
18	KW-003-03	Key - Woodruff 1/8 x 1/2 Lg	1
19	00-114696	Shaft Seal Assy. (5/8)	1
20	00-067500-00007	O-Ring	1
21	00-293620	Motor - Service (60 Hz., 1 Ph.)	1
22	00-293619	Motor - Service (60 Hz., 3 Ph.)	1
23	00-293618	Motor - Service (50 Hz., 1 Ph.)	1
24	00-293617	Motor - Service (50 Hz., 3 Ph.)	1
*25	00-748519-00001	Motor - (60 Hz., 1 Ph.)	1
*26	00-748519-00003	Motor - (60 Hz., 3 Ph.)	1
*27	00-748519-00004	Motor - (50 Hz., 3 Ph.)	1
28	00-748519-00005	Motor - (575 V. 60 Hz., 3 Ph.)	1
29	SC-041-29	Cap Screw 3/8-16 x 7/8 Hex Hd., Wax Coated Threads	2
30	WL-006-28	Lockwasher 3/8 Helical	2
31	00-067500-00097	O-Ring	1
32	00-277836	Shim Kit (Motor To Pump) 1 Blue (0.005), 1 Brown (0.010) & 1 Yellow (0.020 Thk.)	1
33	00-276281	Shell - Pump	1
	00-473249	Screen Weldment - Pump Intake	1
	00-277786-00001	Motor & Impeller Assy. (60 Hz., 1 Ph.) (Incls. Items 13 thru 16, 18 thru 21, & 31)	1
	00-277786-00002	Motor & Impeller Assy.(60 Hz., 3 Ph.)(Incls. Items 13 thru 16,18,19,20,22, & 31)	1
	00-277786-00003	Motor & Impeller Assy.(50Hz., 1Ph.)(Incls. Items 13,14,15,17 thru 20,23, & 31)	1
	00-277786-00004	Motor & Impeller Assy.(50Hz., 3Ph.)(Incls. Items 13,14,15,17 thru 20,24 & 31)	1
*	00-748518-00001	NLA - Obsolete--Motor & Impeller Assy. (60 Hz., 1 Ph.) (Incls. Items 13 thru 20, 25, & 31)	1
*	00-748518-00003	Motor & Impeller Assy. (60 Hz., 3 Ph.) (Incls. Items 13 thru 20, 26, & 31)	1
*	00-748518-00004	Motor & Impeller Assy. (50 Hz., 3 Ph.) (Incls. Items 13 thru 20, 27, & 31)	1
*	00-748518-00007	Motor & Impeller Assy. (575 V., 60 Hz., 3 Ph.) (Incls. Items 13 thru 20, 28, & 31)	1
	00-294505-00001	Wire Harness - Motor Therm. (RH Controls)	1
	00-294523-00001	Wire Harness - Motor Therm. (LH Controls)	1

* AM14 Used After Serial No. 23-1037-280 (GE Motor)

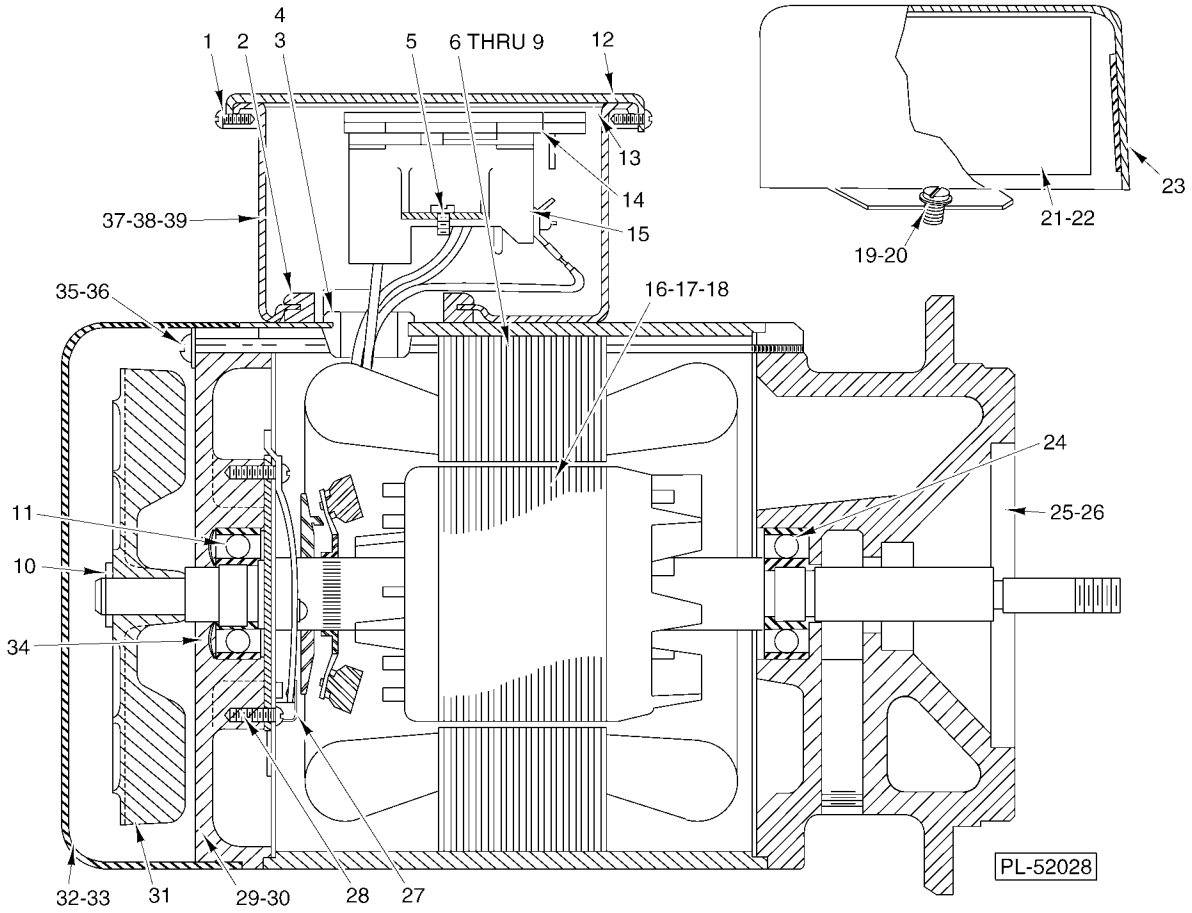

MOTOR
(PRIOR TO AM14 SERIAL NO. 23-1037-280)

MOTOR
(PRIOR TO AM14 SERIAL NO. 23-1037-280)

ILLUS. PL-52028	PART NO.	NAME OF PART	AMT.
1	SD-036-51	Self-Tapping Screw 8-32 x 3/8 Hex Washer Hd., Type T	2
2	00-060395	Grommet	1
3	FE-016-02	Bushing - Snap (Field Ring)	1
4	00-080369	Bushing - Snap (Field Ring)	1
5	SD-036-51	Self-Tapping Screw 8-32 x 3/8 Hex Washer Hd., Type T	2
6	00-065477-147-1	Stator Assy. (100-120 V., 60 Hz.)	1
7	00-065477-147-2	Stator Assy. (115-120 V., 50 Hz.)	1
8	00-065478-110-1	Stator Assy. (200-230/400-460 V., 60 Hz.)	1
9	00-065478-112-1	Stator Assy. (220-380 V., 50 Hz.)	1
10	RR-004-17	Retaining Ring	1
11	BB-020-18	Bearing - Ball	1
12	00-113405	Cover - Terminal Box	1
13	00-114811	Gasket - Terminal Box	1
14	00-113417	Connector - Block Assy	1
15	00-113552	Terminal Block Base Assy	1
16	00-022275-00208	Rotor Assy. (100-120 V., 60 Hz.)	1
17	00-022275-00207	Rotor Assy. (115-220 V., 50 Hz.)	1
18	00-015747-00288	Rotor Assy. (200-230/400-460 V., 60 Hz.) (220-380 V., 50 Hz.)	1
19	SD-015-03	Self-Tapping Screw 10-24 x 1/4 Pan Hd., Type TT	2
20	WS-002-15	Washer	2
21	00-070487-00006	Capacitor (Motor Start)	1
22	00-089258	Retainer - Capacitor	1
23	00-104725	Capacitor Cover & Insulator Assy	1
24	BB-020-18	Bearing - Ball	1
25	00-121191-00001	Bracket - Bearing (Pump End) (60 Hz.)	1
26	00-121191-00002	Bracket - Bearing (Pump End) (50 Hz.)	1
27	00-119858-00002	Switch - Starting (Stationary Part)	1
28	SC-009-49	Mach. Screw 6-32 x 3/8 Rd. Hd	2
29	00-114379-00003	Bracket - Bearing (Fan End)	1
30	00-114379-00002	Bracket - Bearing (Fan End)	1
31	00-292466-00001	Fan - Ventilating	1
32	00-077067	Cover - Motor End	1
33	SC-009-65	Mach. Screw 8-32 x 1/4 Slotted Rd. Hd	2
34	SL-002-04	Spring - Loading	1
35	SC-081-76	Mach. Screw 10-24 x 7 Rd. Hd	4
36	WL-008-13	Lockwasher #10 Internal Shakeproof	4
37	00-113403	Box - Terminal	1
38	SD-015-27	Self-Tapping Screw 10-24 x 5/16 Pan Hd., Type TT	2
39	WL-007-12	Lockwasher 10 External Shakeproof	2
	00-111591-00001	Thermistor (Included with Items 6 thru 9)	2

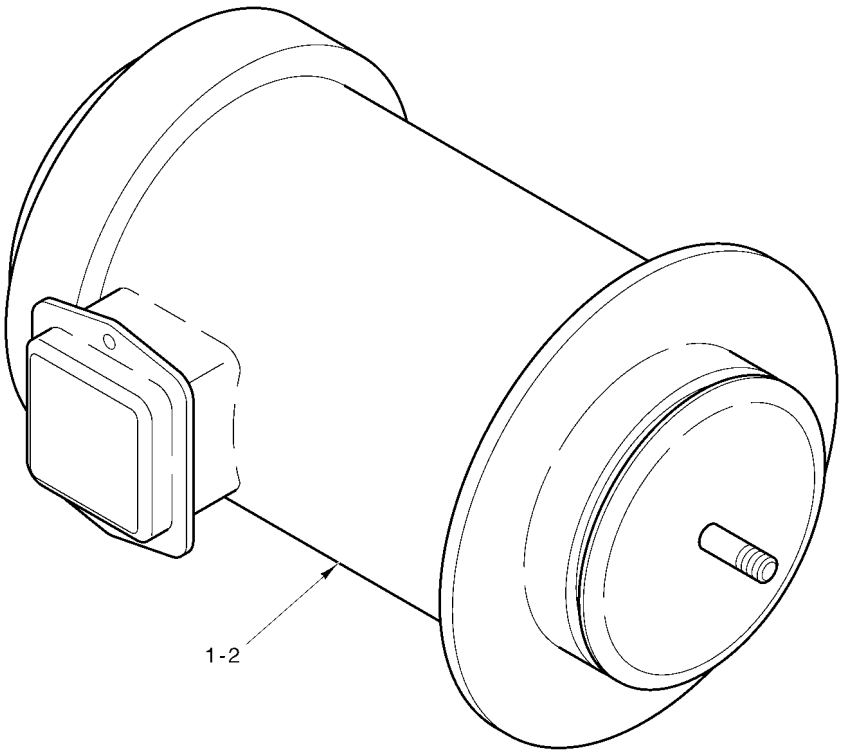

PL-57301

MOTOR
(GE)
(AM14 USED AFTER SERIAL NO. 23-1037-280)

MOTOR
(GE)
(AM14 USED AFTER SERIAL NO. 23-1037-280)

ILLUS. PL-57301	PART NO.	NAME OF PART	AMT.
1	00-892459-00001	Overload - Reset (1 Hp., 1 Ph.)	1
2	00-892459-00005	Overload - Reset (1 Hp., 3 Ph.)	1
3	00-892459-00002	Switch - Start (Not Shown)	1
4	00-892459-00007	Cover - Fan (Not Shown)	1
5	00-892459-00008	Fan Blade & Clip (Not Shown)	1

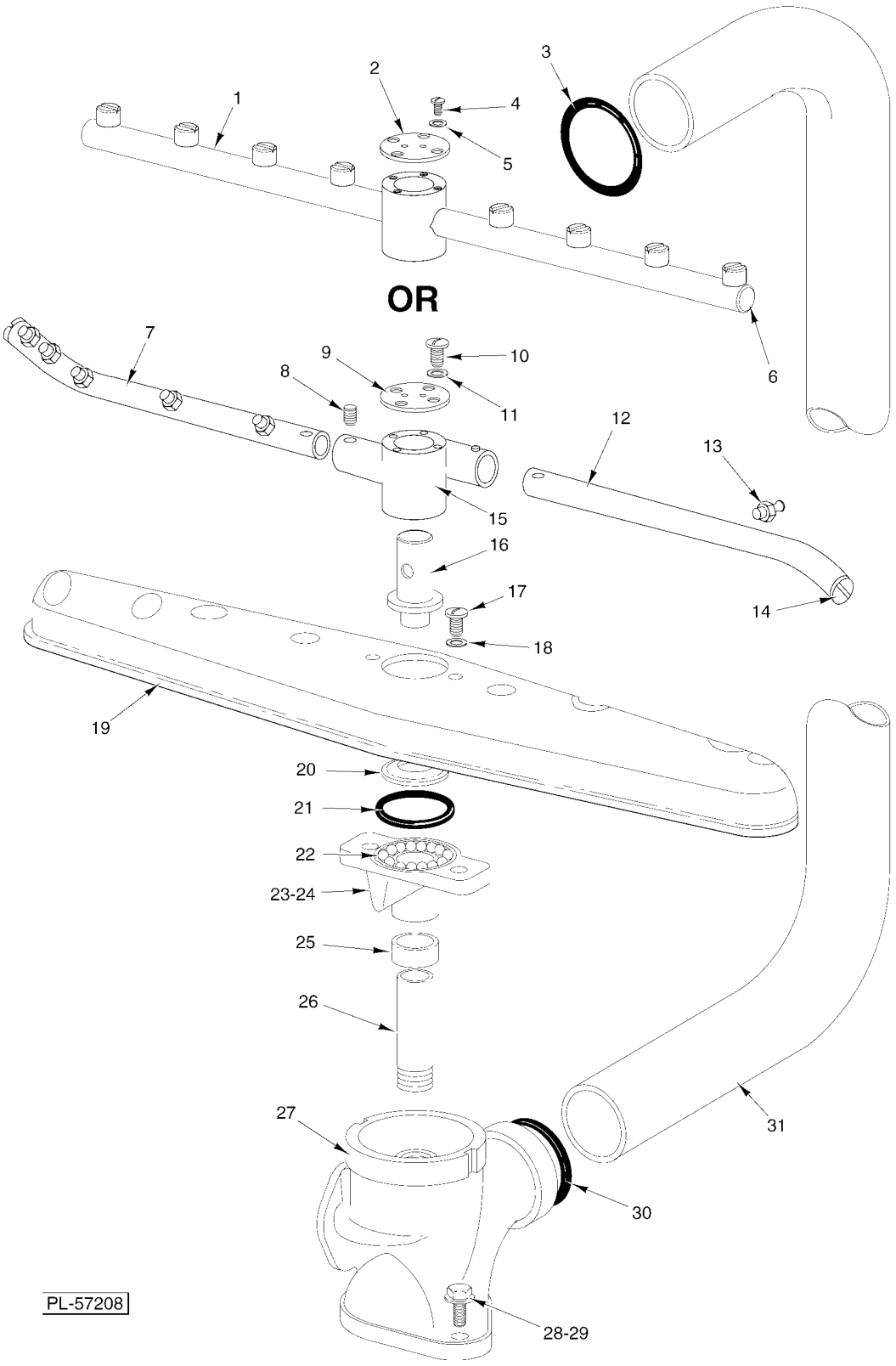

LOWER WASH ARM

LOWER WASH ARM

ILLUS. PL-57208	PART NO.	NAME OF PART	AMT.
1	00-748105	Lower Rinse Arm (Incls. Items 2, 4, & 5)	1
2	00-748282	Plate - Pivot Bearing	1
3	00-067500-00057	O-Ring	1
4	SC-021-14	Mach. Screw 8-32 x 3/8 Rd. Hd., Slotted	4
5	WL-006-01	Lockwasher #8 Helical	4
6	00-474252	Cap - End	2
7	00-122442-00002	Arm - Rinse (5 Nozzle Holes) (Previous Construction)	1
8	SC-110-44	Set Screw 5/16-18 x 3/8 Soc. Hdls., Cone Pt. (Nylon) (Previous Construction)	2
9	00-021137	Plate - Pivot Bearing (Previous Construction)	1
10	SC-021-14	Mach. Screw 8-32 x 3/8 Rd. Hd., Slotted (Previous Construction)	4
11	WL-006-01	Lockwasher #8 (Previous Construction)	4
12	00-122443-00002	Arm - Rinse (4 Nozzle Holes) (Previous Construction)	1
13	00-022731-00003	Nozzle - Rinse (SST) #50 Drill (0.070) (Previous Construction)	9
14	00-122440	Plug - Rinse Arm (Previous Construction)	2
15	00-122633	Body - Lower Rinse Arm (Previous Construction)	1
16	00-286946	Bearing Pin & Washer Assy	1
17	SC-066-06	Mach. Screw 10-24 x 1/2 Phil. Truss Hd. (SST)	2
18	WL-006-07	Lockwasher #10 Helical (SST)	2
19	00-287987	Wash Arm & Hub (Incls. Items 17, 18, & 20 thru 23)	1
20	00-286947	Retainer - Ball	1
21	00-067500-00019	O-Ring	1
22	BA-002-40	Ball 1/4 Dia	13
23	00-286948	Hub	1
24	00-287140	Hub (Service Only)	1
25	00-286944	Spacer	1
26	00-119034	Shaft - Lower Wash Arm	1
27	00-119306	Tee - Lower W ash	1
28	SC-041-31	Cap Screw 3/8-16 x 1-1/4 Hex Hd. (SST)	2
29	WL-006-28	Lockwasher 3/8 Helical	2
30	00-067500-00057	O-Ring	1
31	00-119032	Tube - Wash	1
	00-122635-00002	Lower Rinse Arm (Incls. Items 7 thru 15) (Previous Construction)	1
*	00-287152	Lower Wash Arm Kit (Incls. Items 16,17, 20, 21, 22, 24 & 25)	1

* For Servicing Wash Arm with Fabricated Hub.

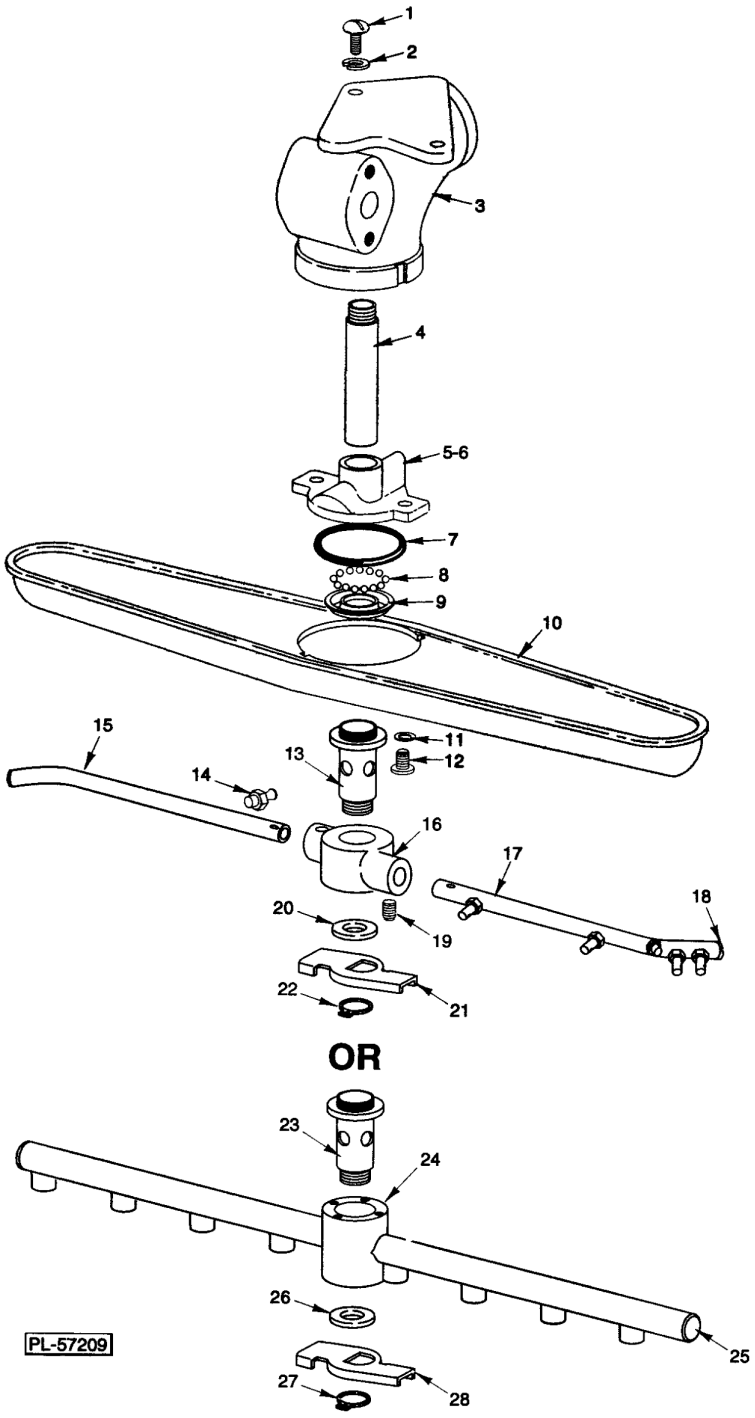

UPPER WASH ARM

UPPER WASH ARM

UPPER WASH ARM

ILLUS. PL-57209	PART NO.	NAME OF PART	AMT.
1	SC-041-09	Cap Screw 5/16-18 x 1/2 Hex Hd. (SST)	2
2	WL-006-23	Lockwasher 5/16 Helical (SST)	2
3	00-289084	Ell - Upper Wash	1
4	00-122437	Shaft - Upper Wash Arm	1
5	00-286948	Hub	1
6	00-287140	Hub	1
7	00-067500-00019	O-Ring	1
8	BA-002-40	Ball 1/4 Dia	13
9	00-286947	Retainer - Ball	1
10	00-287987	Wash Arm & Hub Assy. (Incls. Items 5, 7, 8, 9, 11, & 12)	1
11	WL-006-07	Lockwasher #10 Helical (SST)	2
12	SC-066-06	Mach. Screw 10-24 x 1/2 Phil. Truss Hd. (SST)	2
*13	00-122438	Upper Rinse Shaft Assy	1
*14	00-022731-00003	Nozzle - Rinse (SST) #50 Drill (0.070)	11
*15	00-287913	Arm - Inside Rinse (6 Nozzle Holes)	1
*16	00-122401	Hub - Rinse Arm	1
*17	00-287908	Arm - Outside Rinse (5 Nozzle Holes)	1
*18	00-122440	Plug - Rinse Arm	2
*19	SC-110-44	Set Screw 5/16-18 x 3/8 Soc. Hdls., Cone Pt. (Nylon)	2
*20	00-122632	Washer - Thrust	1
*21	00-122445	Handle	1
*22	RR-011-03	Retaining Ring	1
**23	00-748281	Upper Rinse Shaft Assy	1
**24	00-748104	Upper Rinse Arm Assy	1
25	00-474252	Cap - End	2
26	00-122632	Washer - Thrust	1
27	RR-011-03	Retaining Ring	1
28	00-122445	Handle	1
*	00-287932-00002	Rinse Arm Assy. (Incls. Items 13 thru 22)	1
***	00-287151	Upper Wash Arm Kit (Incls. Items 6 thru 9 & 12)	1

* Prior to Serial Number 23-1021-610
** First Serial Number
*** For Servicing Wash Arms with Fabricated Hub.

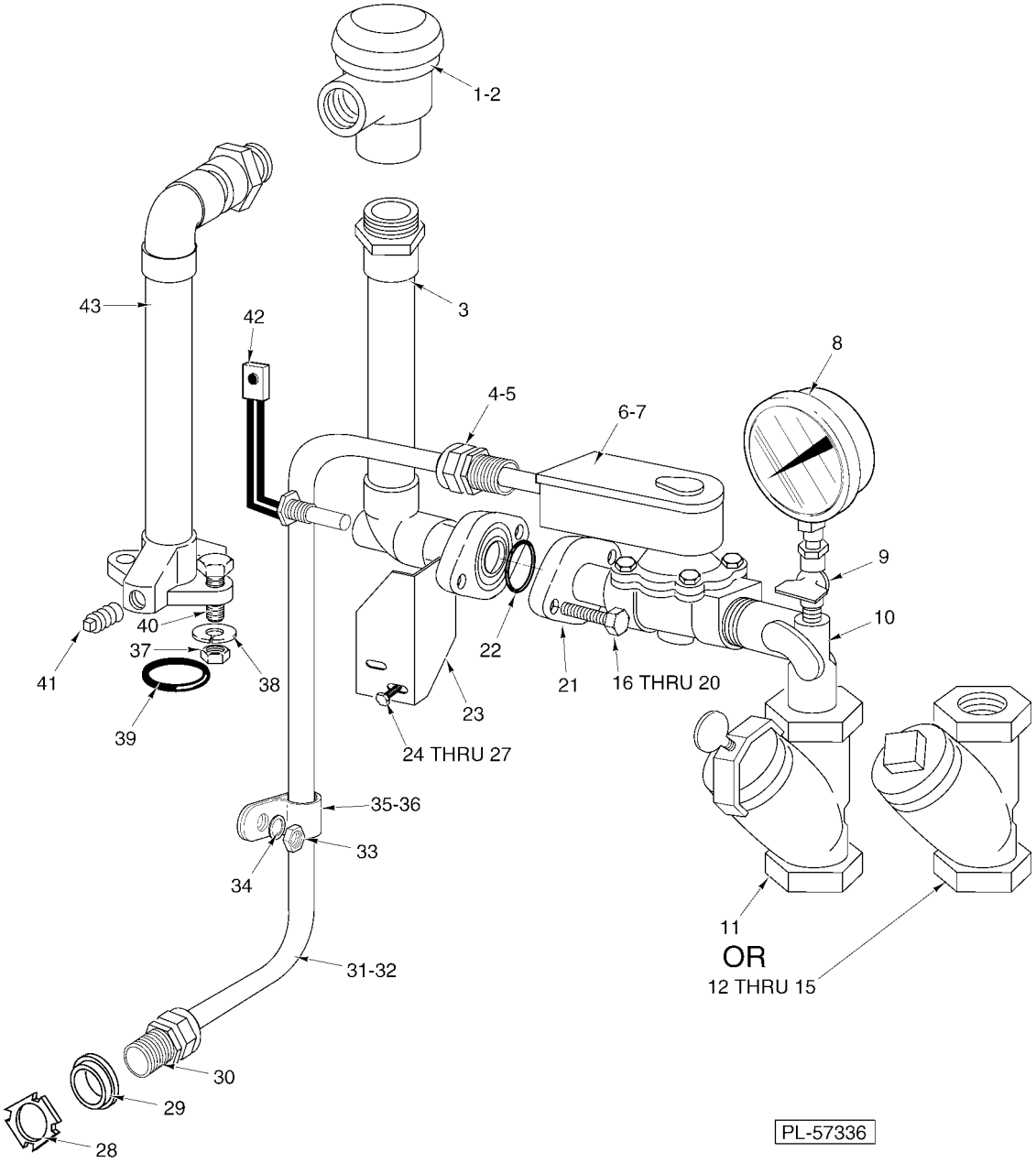

OUTSIDE RINSE PIPING(EARLIER PREV. CONSTR.)
(ML-32614,ML-32615 & ML-110025)

OUTSIDE RINSE PIPING(EARLIER PREV. CONSTR.)
(ML-32614,ML-32615 & ML-110025)

ILLUS. PL-57336	PART NO.	NAME OF PART	AMT.
1	00-277112	Vacuum Breaker (3/4 In.)	1
2	00-118270	Service Kit - Vacuum Breaker (Float & Seal Assy.)	1
3	00-288940	Connector Assy. (Vacuum Breaker to Solenoid Valve)	1
4	FE-022-84	Relief - Strain	1
5	FE-006-05	Lock Nut 1/2	1
6	00-270329-00003	Valve - Solenoid (Incls. Item 7) (Piston Valve; Gray Cover)	1
7	00-270318-00003	Coil - Solenoid Valve (20-30 V.)	1
8	00-328247	Gauge - Water Pressure	1
9	00-436319	Petcock 1/4	1
10	00-119066	Tee - Pressure Gauge	1
11	00-082231	Screen (3/4 In. Line Strainer)	1
12	00-186922	Line Strainer (3/4 In.) (Brass)	1
13	00-186925	Screen (3/4 In. Line Strainer)	1
14	00-186924	Gasket (3/4 In. Line Strainer)	1
15	00-186923	Plug - Branch (3/4 In. Line Strainer)	1
16	SC-041-16	Cap Screw 5/16-18 x 1 3/8 Hex Hd	1
17	SC-041-15	Cap Screw 5/16-18 x 1 1/4 Hex Hd	1
18	WS-017-08	Washer (0.328 x 0.625 x 0.062) (SST)	2
19	WL-006-23	Lockwasher 5/16 Helical (SST)	2
20	NS-015-11	Nut 5/16-18 Hex (SST)	2
21	00-063262-00026	Flange & Pipe Assy	1
22	00-067500-00012	O-Ring	1
23	00-119292	Bracket - Outside Rinse Pipe	1
24	SC-041-05	Cap Screw 1/4-20 x 5/8 Hex Hd	2
25	WS-003-48	Washer	2
26	WL-006-17	Lockwasher 1/4 Helical (SST)	2
27	NS-015-01	Nut 1/4-20 Hex (SST)	2
28	FE-006-05	Lock Nut 1/2	1
29	FE-008-10	1/2 Gasket Assy	1
30	FE-022-84	Connector - Strain Relief	1
31	00-294853-046-1	Fill Valve Cable (RH Controls)	1
32	00-294853-046-4	Fill Valve Cable (LH Controls)	1
33	NS-011-18	Nut 10-24 Hex (SST)	4
34	WL-006-07	Lockwasher #10 Helical (SST)	4
35	00-078752-00004	Retainer (7/16 In.)	1
36	00-078752-00002	Retainer (3/4 In.)	3
37	NS-015-11	Nut 5/16-18 Hex (SST)	2
38	WL-006-23	Lockwasher 5/16 Helical (SST)	2
39	00-067500-00012	O-Ring	1
40	SC-041-14	Cap Screw 5/16-18 x 1 1/8 Hex Hd. (SST)	2
41	00-119127	Pipe Plug	2
42	00-294692	Rinse Probe Assy	1
43	00-288941-00002	Connector Assy. (Vacuum Breaker to Inside Rinse)	1
	00-270336	Service Kit - Solenoid Valve (Piston Valve; Gray Cover)	1
	00-106459	Valve Kit (Diaphram Type) (Incls. Cap, Bonnet Gasket, Stem Spring, & Pin)	1
	00-083376	Wire Tie (LH Controls)	2

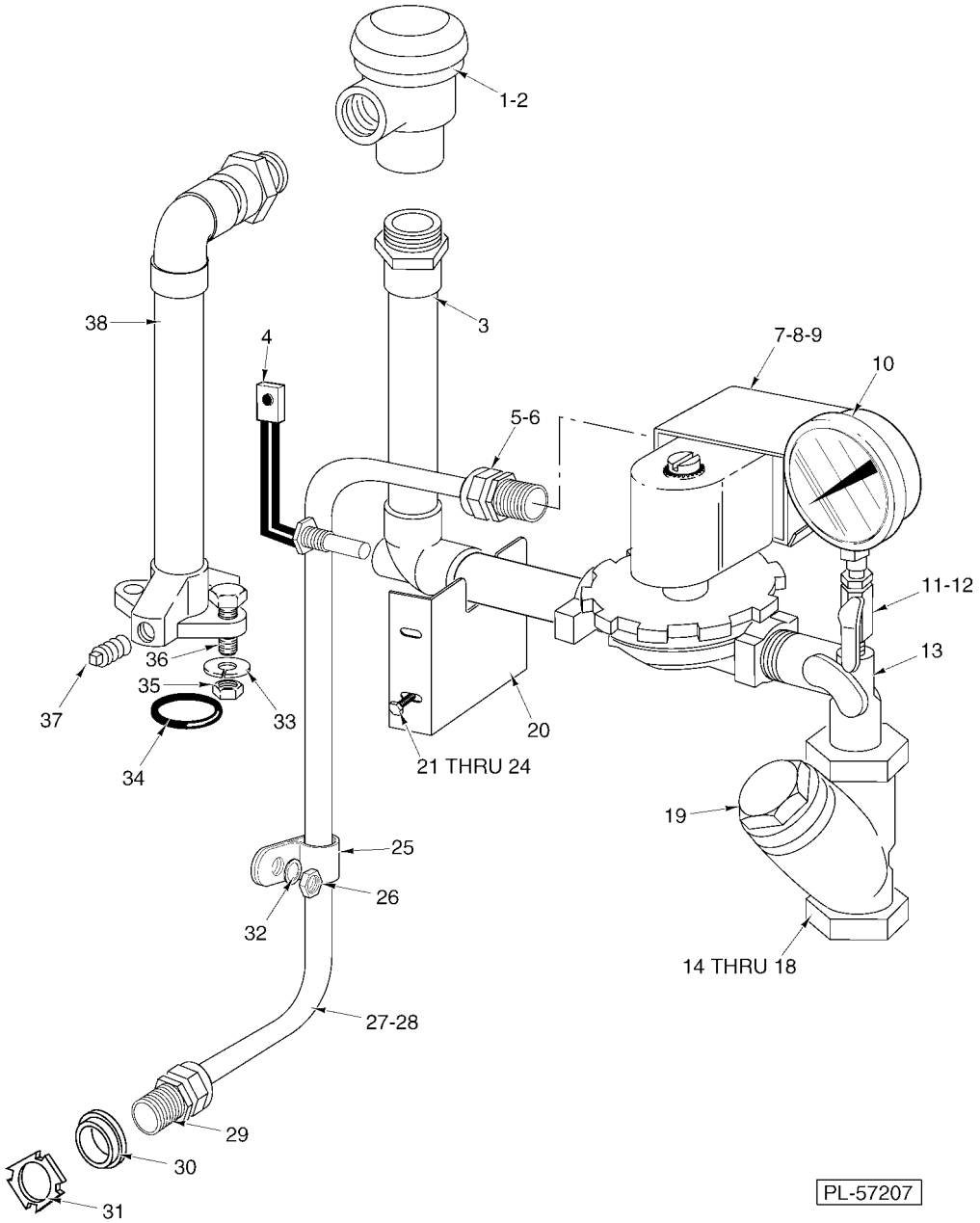

OUTSIDE RINSE PIPING
(PREV. CONSTRUCTION)
(ML-32614, ML-32615 & ML-110025)

OUTSIDE RINSE PIPING
(PREV. CONSTRUCTION)
(ML-32614, ML-32615 & ML-110025)

ILLUS. PL-57207	PART NO.	NAME OF PART	AMT.
1	00-277112	Vacuum Breaker (3/4 In.)	1
2	00-118270	Service Kit - Vacuum Breaker (Float & Seal Assy.)	1
3	00-328491	Connector Assy. (Vacuum Breaker to Solenoid Valve)	1
4	00-294692	Rinse Probe Assy	1
5	FE-022-84	Connector - Strain Relief	1
6	FE-006-05	Lock Nut 1/2	1
7	00-271002-00003	Valve - Solenoid (24 V., 50-60 Hz.) (Incls. Item 9)	1
8	00-271002-00001	Valve - Solenoid 3/4 In. (110-120 V., 50-60 Hz.)	1
9	00-271839-00003	Coil - Solenoid Valve (24 V., 50-60 Hz.)	1
10	00-328247	Gauge - Water Pressure	1
11	00-436319	Petcock 1/4	1
12	FP-040-08	Nipple	1
13	00-119066	Tee - Pressure Gauge	1
14	00-186922	Line Strainer (3/4) (Incls. Items 15 thru 18)	1
15	00-082231	Screen (3/4 In. Line Strainer)	1
16	00-186922	Plate - Seal (3/4 In. Line Strainer) (Brass)	1
17	00-082238	Thumb Screw (Not Shown)	1
18	00-067500-00059	O-Ring (3/4 In. Line Strainer)	1
19	00-186923	Plug - Branch	1
20	00-328490	Bracket - Outside Rinse Fill Piping	1
21	SC-041-05	Cap Screw 1/4-20 x 5/8 Hex Hd	2
22	WS-003-48	Washer	2
23	WL-006-17	Lockwasher 1/4 Helical (SST)	2
24	NS-015-01	Nut 1/4-20 Hex (SST)	2
25	00-078752-00004	Retainer (7/16 In.)	1
26	NS-011-18	Nut 10-24 Hex (SST)	4
27	00-294853-046-1	Fill Valve Cable (RH Controls)	1
28	00-294853-046-4	Fill Valve Cable (LH Controls)	1
29	FE-022-84	Connector - Strain Relief	1
30	FE-008-10	1/2 Gasket Assy	1
31	FE-006-05	Lock Nut 1/2	1
32	WL-006-07	Lockwasher #10 Helical (SST)	4
33	WL-006-23	Lockwasher 5/16 Helical (SST)	2
34	00-067500-00012	O-Ring	1
35	NS-015-11	Nut 5/16-18 Hex (SST)	2
36	SC-041-14	Cap Screw 5/16-18 x 1 1/8 Hex Hd. (SST)	2
37	00-119127	Pipe Plug	2
38	00-288941-00002	Connector Assy. (Vacuum Breaker to Inside Rinse)	1
	00-271838	Service Kit - 3/4 In. Solenoid Valve	1
	00-083376	Wire Tie	2
	00-476139	Kit - Piping (W/O Booster)	1

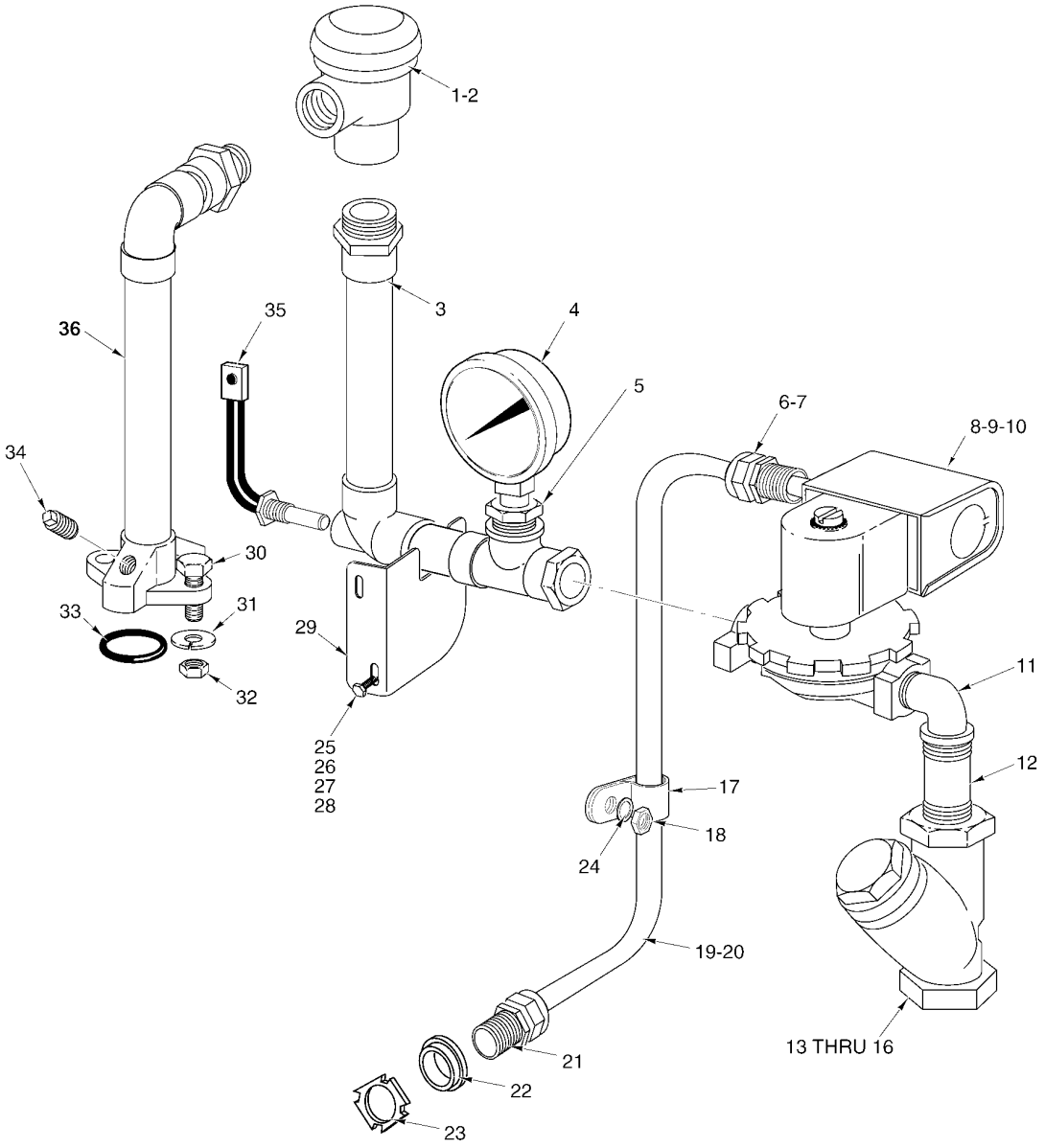

PL-57299

OUTSIDE RINSE PIPING(CURRENT CONSTRUCTION)
(ML-32614,ML-32615 & ML-110025)

OUTSIDE RINSE PIPING(CURRENT CONSTRUCTION) (ML-32614,ML-32615 & ML-110025)

ILLUS. PL-57299	PART NO.	NAME OF PART	AMT.
1	00-277112	Vacuum Breaker (3/4 In.)	1
2	00-118270	Service Kit - Vacuum Breaker (Float & Seal Assy.)	1
3	00-475171	Connector Assy. (Vacuum Breaker to Solenoid Valve)	1
4	00-328247	Gauge - Water Pressure	1
5	FP-027-07	Bushing - Pipe 1/2 to 1/4	1
6	FE-022-84	Connector - Strain Relief	1
7	FE-006-05	Lock Nut 1/2	1
8	00-271002-00003	Valve - Solenoid (24 V ., 50-60 Hz.) (Incls. Item 10)	1
9	00-271002-00001	Valve - Solenoid 3/4 In. (110-120 V., 50-60 Hz.)	1
10	00-271839-00003	Coil - Solenoid Valve (24 V., 50-60 Hz.)	1
11	FP-015-24	Street L - Pipe 3/4 x 90 Deg. (Brass)	1
12	FP-041-50	Pipe - 3/4 x 1 3/8 (Brass) TBE	1
13	00-186922	Line Strainer (3/4) (Incls. Items 14 thru 16)	1
14	00-186925	Screen (3/4 In. Line Strainer)	1
15	00-186924	Gasket (3/4 In. Line Strainer)	1
16	00-186923	Plug - Branch (3/4 In. Line Strainer)	1
17	00-078752-00004	Retainer (7/16 In.)	1
18	NS-011-18	Nut 10-24 Hex (SST)	4
19	00-294853-046-1	Fill Valve Cable (RH Controls)	1
20	00-294853-046-4	Fill Valve Cable (LH Controls)	1
21	FE-022-84	Connector - Strain Relief	1
22	FE-008-10	1/2 Gasket Assy	1
23	FE-006-05	Lock Nut 1/2	1
24	WL-006-07	Lockwasher #10 Helical (SST)	4
25	SC-041-05	Cap Screw 1/4-20 x 5/8 Hex Hd	2
26	WS-003-48	Washer	2
27	WL-006-17	Lockwasher 1/4 Helical (SST)	2
28	NS-015-01	Nut 1/4-20 Hex (SST)	2
29	00-475173	Bracket - Outside Rinse Fill Piping	1
30	SC-041-14	Cap Screw 5/16-18 x 1 1/8 Hex Hd. (SST)	2
31	WL-006-23	Lockwasher 5/16 Helical (SST)	2
32	NS-015-11	Nut 5/16-18 Hex (SST)	2
33	00-067500-00012	O-Ring	1
34	FP-028-03	Pipe Plug 1/8 Sq. Hd	2
35	00-294692	Rinse Probe Assy	1
36	00-475170	Piping Assy. (Chamber to Vacuum Breaker)	1
	00-271838	Service Kit - 3/4 In. Solenoid Valve	1
	00-083376	Wire Tie	2
	00-294357-00001	Housing - Connector	1
	00-065890-00177	Terminal	2

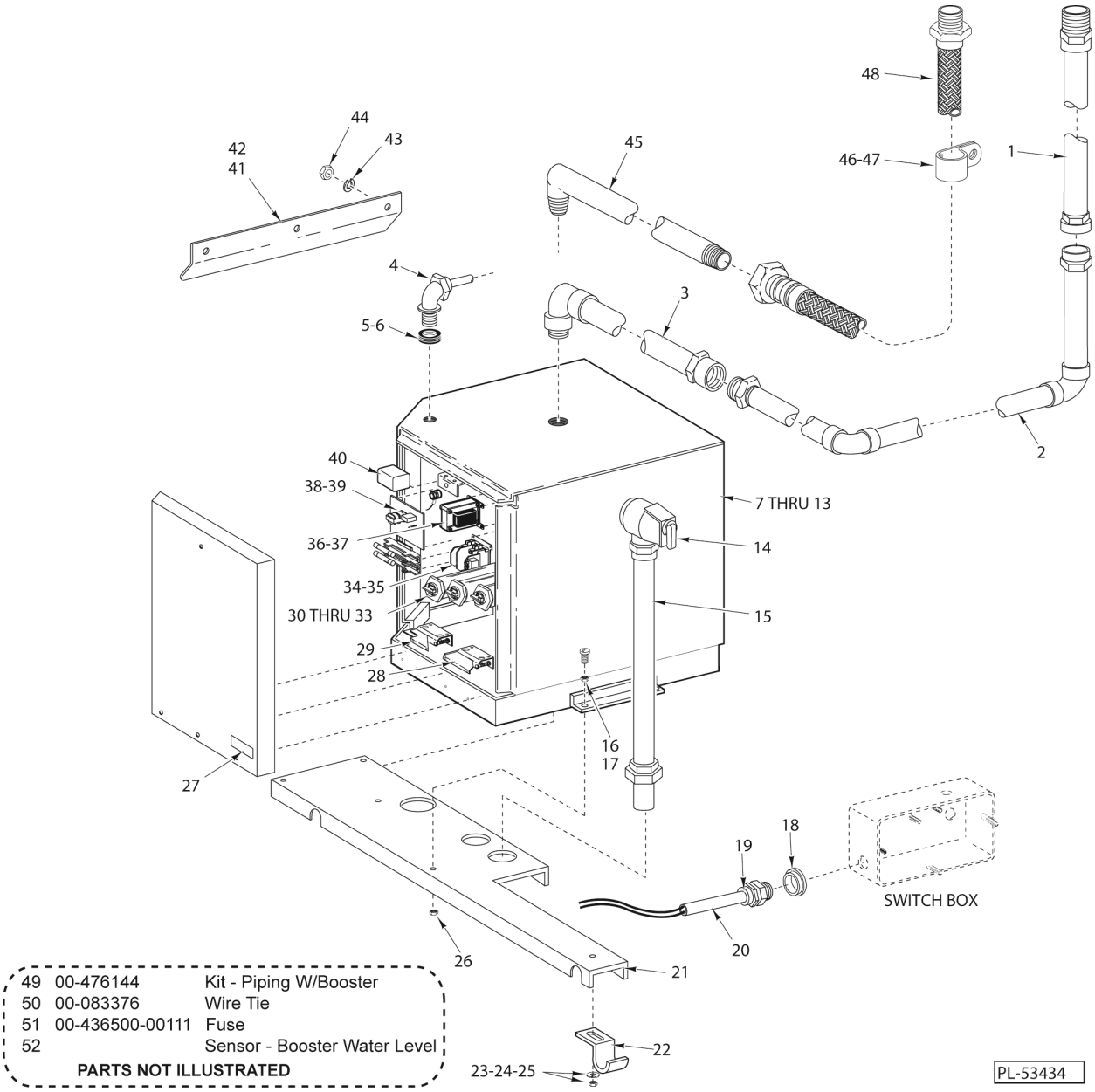

49	00-476144	Kit - Piping W/Booster
50	00-083376	Wire Tie
51	00-436500-00111	Fuse
52		Sensor - Booster Water Level

PARTS NOT ILLUSTRATED

BOOSTER AND PIPING
(ML-32614, ML-32615, & ML-110025)

BOOSTER AND PIPING
(ML-32614, ML-32615, & ML-110025)

ILLUS. PL-53434	PART NO.	NAME OF PART	AMT.
*1	00-274207	Booster Piping (ML-32614 & ML-32615)	1
*2	00-274206	Booster Piping	1
*3	00-274205	Booster Piping	1
*4	FE-024-04	Strain Relief 1/2 x 90 Deg	1
*5	FE-008-10	1/2 Gasket Assy	1
*6	FE-024-88	Lock Nut - Electric 1/2 (Nylon)	1
7	00-274023-00001	Booster - Electric Water (200 V., 50/60 Hz.) (220 V., 50 Hz., 1 Ph.)	1
8	00-274023-00002	Booster - Electric Water (200 V., 50/60 Hz., 3 Ph.)	1
9	00-274023-00003	Booster - Electric Water (230 V., 60 Hz., 1 Ph.)	1
10	00-274023-00004	Booster - Electric Water (230 V., 60 Hz.) (240 V., 50 Hz., 3 Ph.)	1
11	00-274023-00005	Booster - Electric Water (460 V., 60 Hz., 3 Ph.)	1
12	00-274023-00007	Booster - Electric Water (380 V., 50 Hz., 3 Ph.)	1
13	00-274023-00008	Booster - Electric Water (415 V., 50 Hz., 3 Ph.)	1
14	00-274162	Valve - Pressure Temp. Relief 3/4	1
15	00-271968	Temp. Relief Valve Piping Assy	1
16	WL-006-17	Lockwasher 1/4 Helical (SST)	4
17	SC-041-05	Cap Screw 1/4-20 x 5/8 Hex Hd	4
18	FE-008-10	1/2 Gasket Assy	2
19	FE-022-84	Connector - Strain Relief	1
20	00-476761-00003	Booster Cable Assy	1
21	00-271509-00001	Support - Booster Weldment	1
22	00-274163	Clamp - Booster	2
23	WS-022-34	Washer	2
24	WL-006-17	Lockwasher 1/4 Helical (SST)	2
25	NS-015-01	Nut 1/4-20 Hex (SST)	2
26	NS-015-01	Nut 1/4-20 Hex (SST)	4
27	0F-033736	Label - Warning	1
28	00-274161	Thermostat - Control	1
29	00-274160	Thermostat - High Limit	1
30	00-274157-00001	Element - Heater (200 V.) (3200 W.)	1
31	00-274157-00002	Element - Heater (240 V.) (3800 W.)	1
32	00-274157-00003	Element - Heater (480 V.) (3800 W.)	1
33	00-274158	Gasket - Heater Element	1
34	00-274198	Contactor (120 V., Coil; 1 Ph., 2 Pole)	1
35	00-087713-066-4	Contactor - Magnetic (110-120 V ., Coil; 3 Ph., 3 Pole)	1
36	00-274024	Transformer (40 VA, 208-240 V.)	1
37	00-274025	Transformer (40 VA, 480 V.)	1
38	00-274159	Board - Low Water Cut-Off (120 VAC)	1
39	00-274159-00002	Board - Low Water Cut-Off (24 VAC)	1
40	00-087714-007-1	Relay (24 VAC) (D.P.D.T.) (Steam/Electric Heat)	1
**41	00-526454-00002	Foam Tape	AR
**42	00-474601	Booster - Awning	1
**43	WL-006-17	Lockwasher 1/4 Helical (SST)	3
**44	NS-015-01	Nut 1/4-20 Hex (SST)	3
**45	00-474563	Pipe - Booster Output (Or Use 00-475327 SST 8")	1
**46	00-078752-00005	Clamp (Flex Hose)	1
**47	NS-031-15	Stop Nut - Special 10-24 Hex (SST)	1
**48	00-475254-00003	Hose - Flex (Booster Piping) (ML-32614 & ML-32615)	1
49	00-476144	Kit - Piping W/Booster (Incls. Items 42 & 48)	1
50	00-083376	Wire Tie	1
51	00-436500-00111	Fuse (AGC-1)	1
***52		Sensor - Booster Water Level	1

* Prior to Serial Number 23-1011-500
** First Serial Number
*** Contact Poduct Support

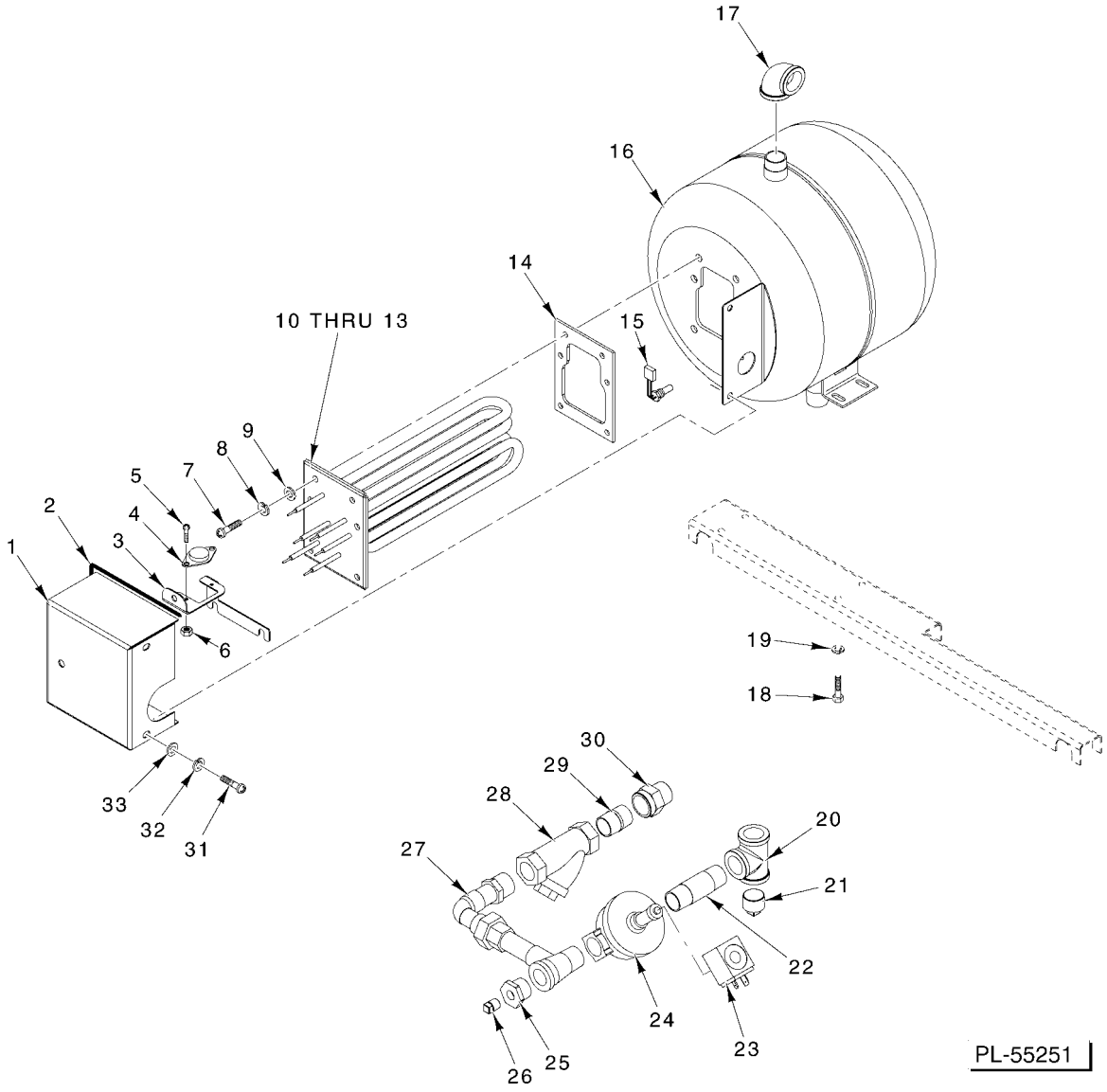

BOOSTER TANK
(ML-110976 & ML-110977)

BOOSTER TANK
(ML-110976 & ML-110977)

ILLUS. PL-55251B	PART NO.	NAME OF PART	AMT.
1	00-749604	Lid - Heat Box (Electric Booster)	1
2	00-749991	Gasket - Li d (Heat Box)	1
3	00-749837	Bracket - High Limit Protector	1
4	00-271123	Protector - High Limit	1
5	SC-021-08	Mach. Screw 6-32 x 3/8 Slotted Rd. Hd. (SST)	2
6	NS-031-50	Stop Nut 6-32 Hex (SST)	2
7	SC-041-01	Cap Screw 1/4-20 x 3/4 Hex Hd. (SST)	6
8	WL-006-17	Lockwasher 1/4 Helical (SST)	6
9	WS-017-06	Washer (SST)	6
10	00-749554-00001	Heater (13 kW) (208 V.)	1
11	00-749554-00002	Heater (13 kW) (240 V.)	1
12	00-749554-00003	Heater (13 kW) (480 V.)	1
13	00-749554-00004	Heater (13 kW) (380 V.)	1
14	00-749555	Gasket (13 kW) (Electric Heater)	1
15	00-294692	Probe - Thermistor	1
16	00-749581	Tank - Weldment (Electric Booster)	1
17	FP-015-23	Elbow 3/4 x 90 Deg. (Brass)	1
18	SC-041-50	Cap Screw 1/4-20 x 1/2 Hex Hd. (SST)	4
19	WL-006-17	Lockwasher 1/4 Helical (SST)	4
20	FP-019-28	Tee - Pipe 3/4 x 3/4 x 3/4 (Brass)	1
21	FP-028-19	Pipe Plug 3/4 Sq. Hd. (Brass)	1
22	FP-041-59	Pipe 3/4 x 2 1/2 TBE (Brass)	1
23	00-749936-00001	Coil - Solenoid Valve (24 V.)	1
24	00-749890-00001	Valve - Solenoid (3/4 In.) (Incls. Item 23)	1
25	FP-027-15	Bushing - Pipe 3/4 to 1/4	1
26	FP-028-07	Pipe Plug 1/4 Sq. Hd	1
27	00-749579	Piping - Inlet, Solder	1
28	00-186922	Strainer - Line (3/4 In.) (Brass)	1
29	FP-041-50	Pipe 3/4 x 1-3/8 TBE (Brass)	1
30	00-328818-00002	Regulator - Flow	1
31	SC-041-50	Cap Screw 1/4-20 x 1/2 Hex Hd. (SST)	3
32	WL-006-17	Lockwasher 1/4 Helical (SST)	3
33	WS-017-06	Washer (SST)	3
	00-749939	Kit - Service 3/4 In. Valve (Use with Item 24)	1
	00-546292	Sealer	AR

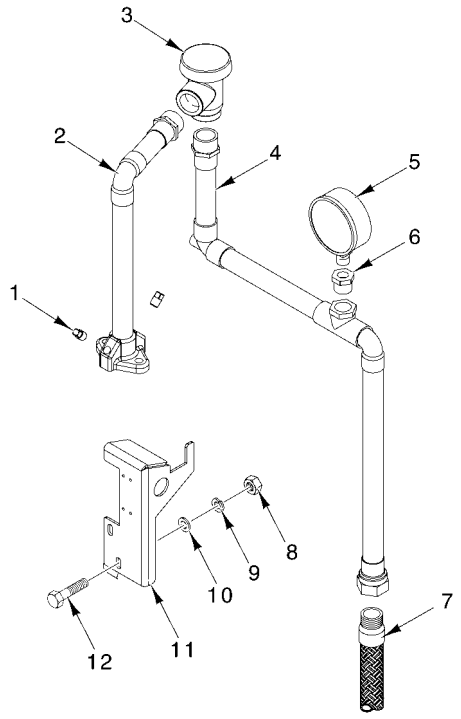

PL-57213

OUTSIDE RINSE PIPING W/BOOSTER
(ML-110976 & ML-110977)

OUTSIDE RINSE PIPING W/BOOSTER
(ML-110976 & ML-110977)

ILLUS. PL-57213	PART NO.	NAME OF PART	AMT.
1	00-119127	Pipe Plug 1/8 Sq. Hd	2
2	00-475170	Piping Assy. (Chamber to Vacuum Breaker)	1
3	00-277112	Vacuum Breaker (3/4)	1
4	00-749629	Piping Assy. (Vacuum Breaker to Hose)	1
5	00-328247	Gauge - Water Pressure	1
6	FP-027-07	Bushing - Pipe 1/2 to 1/4 (Brass)	1
7	00-749153-00007	Hose - Water 3/4 x 58 In. Braided (SST)	1
8	NS-015-01	Nut 1/4 - 20 Hex (SST)	2
9	WL-006-17	Lockwasher 1/4 Helical (SST)	2
10	WS-017-06	Washer (SST)	2
11	00-749984	Bracket - Outside Fill Piping	1
12	SC-041-05	Cap Screw 1/4-20 x 5/8 Hex Hd	2
	00-546292	Sealer	AR
	00-749887-00005	Cable - Fill V alve (RH & LH Controls)	1

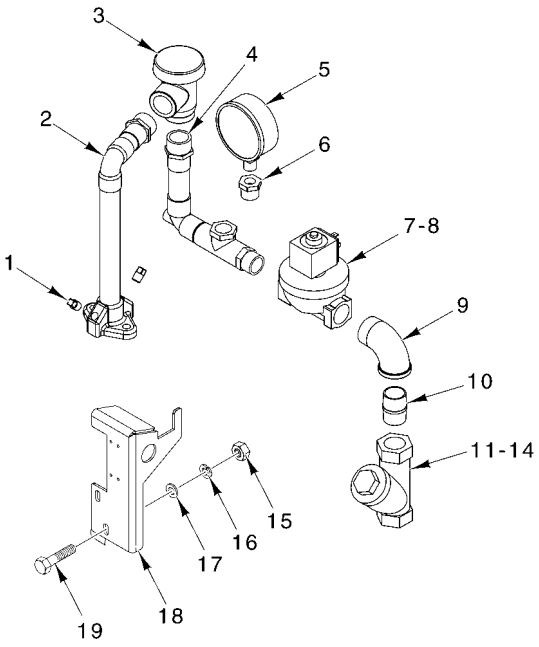

PL-57214

OUTSIDE RINSE PIPING W/O BOOSTER
(ML-110976 & ML-110977)

OUTSIDE RINSE PIPING W/O BOOSTER (ML-110976 & ML-110977)

ILLUS. PL-57214	PART NO.	NAME OF PART	AMT.
1	00-119127	Pipe Plug 1/8 Sq. Hd	2
2	00-475170	Piping Assy. (Chamber to Vacuum Breaker)	1
3	00-277112	Vacuum Breaker (3/4)	1
4	00-749940	Piping Assy. (Vacuum Breaker to Valve)	1
5	00-328247	Gauge - Water Pressure	1
6	FP-027-07	Bushing - Pipe 1/2 to 1/4 (Brass)	1
7	00-749890-00001	Valve - Solenoid (3/4 In.) (Incls. Item 8)	1
8	00-749936-00001	Coil - Solenoid Valve (24 VAC)	1
9	FP-015-24	Elbow - Pipe 3/4 x 90 Deg. (Brass)	1
10	FP-041-50	Pipe 3/4 x 1-3/8 TBE (Brass)	1
11	00-186922	Strainer - Line (3/4 In.) (Brass)	1
12	00-749802-00003	Screen (80 Mesh)	1
13	00-749802-00002	Gasket	1
14	00-749802-00001	Cap	1
15	NS-015-01	Nut 1/4-20 Hex (SST)	2
16	WL-006-17	Lockwasher 1/4 Helical (SST)	2
17	WS-017-06	Washer (SST)	2
18	00-749984	Bracket - Outside Fill Piping	1
19	SC-041-05	Cap Screw 1/4-20 x 5/8 Hex Hd	2
	00-749939	Kit - Service 3/4 Valve (Use with Item 7)	1
	00-546292	Sealer	AR
	00-749887-00003	Cable - RH Fill V alve (AM14 & AM14C)	1
	00-749887-00004	Cable - LH Fill Valve (AM14 & 90 Deg. AM14C)	1
	00-067500-00012	O-Ring Top of Tank to Flange	1

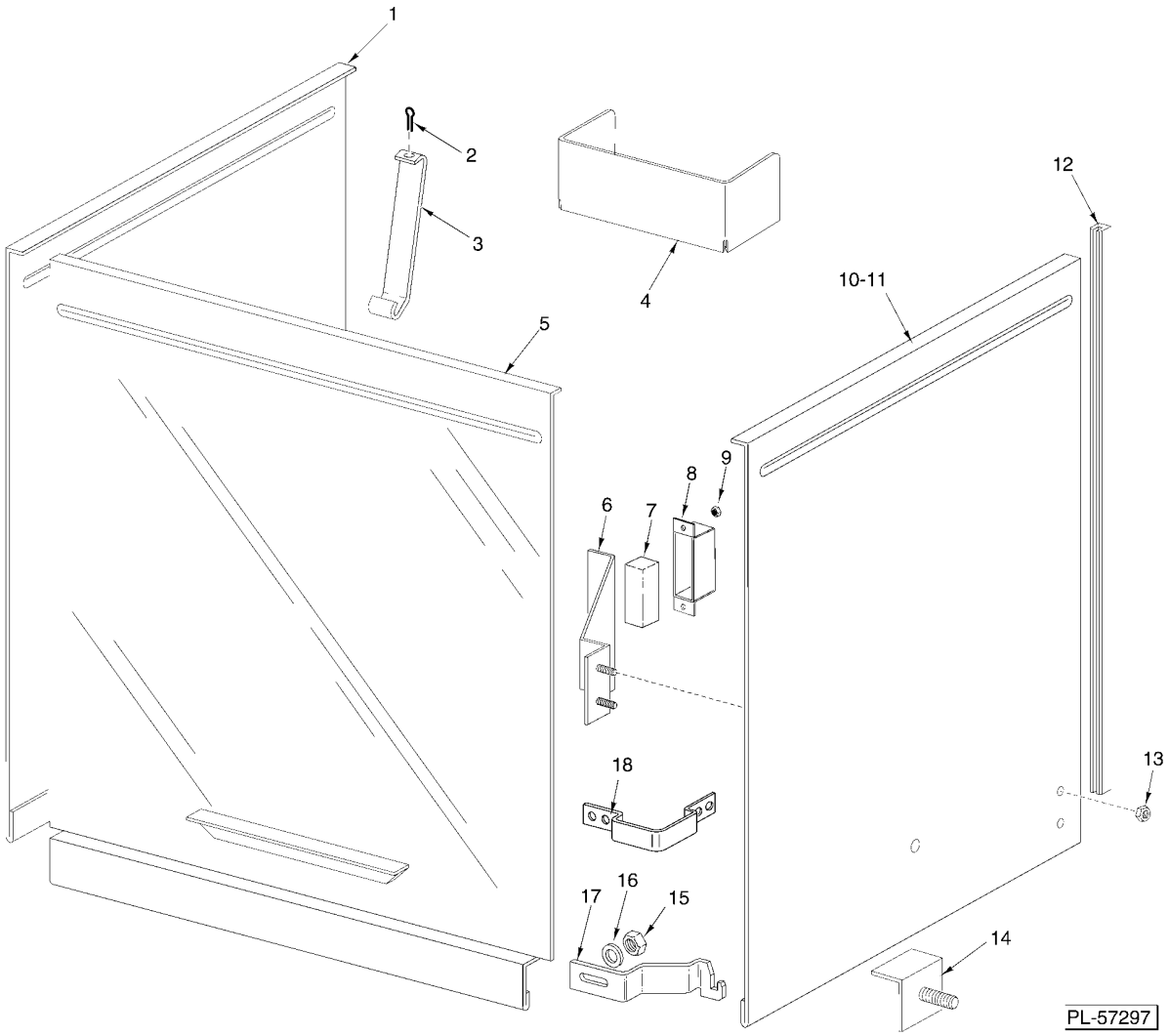

DOOR (STRAIGHT-THRU)

DOOR (STRAIGHT-THRU)

ILLUS. PL-57297	PART NO.	NAME OF PART	AMT.
1	00-119006-00002	Door - Counterbalanced (LH) (AM14 & AM14P)	1
2	PC-006-29	Cotter Pin 1/16 x 1/2 (SST)	1
3	00-119236	Latch - Inspection Door	1
4	00-892037	Deflector - Vent	1
5	00-119133	Door & Lift Assy. (Non-Counterbalanced)	1
6	00-748056	Bracket - Magnet	1
7	00-290160	Magnet	1
8	00-290159	Retainer - Magnet	1
9	NS-031-50	Stop Nut 6-32 Hex (SST)	2
10	00-748055	Door (RH) (AM14 & AM14P)	1
11	00-119006-00001	Door - Counterbalance (RH) (Used With Side Mount Door Switch) (Not Shown)	1
12	00-112378-00023	Guide - Door	6
13	NS-047-82	Stop Nut - Special 1/4-20 Hex	2
14	00-289117-00002	Door Stop Assy	2
15	NS-018-06	Jam Nut 5/16-18 Hex (SST)	2
16	WS-017-08	Washer (0.328 x 0.625 x 0.062) (SST)	2
17	00-475150-00001	Bracket - Door Lock (RH) (AM14)	1
18	00-329747	Bracket - Door Lock (AM14P)	2

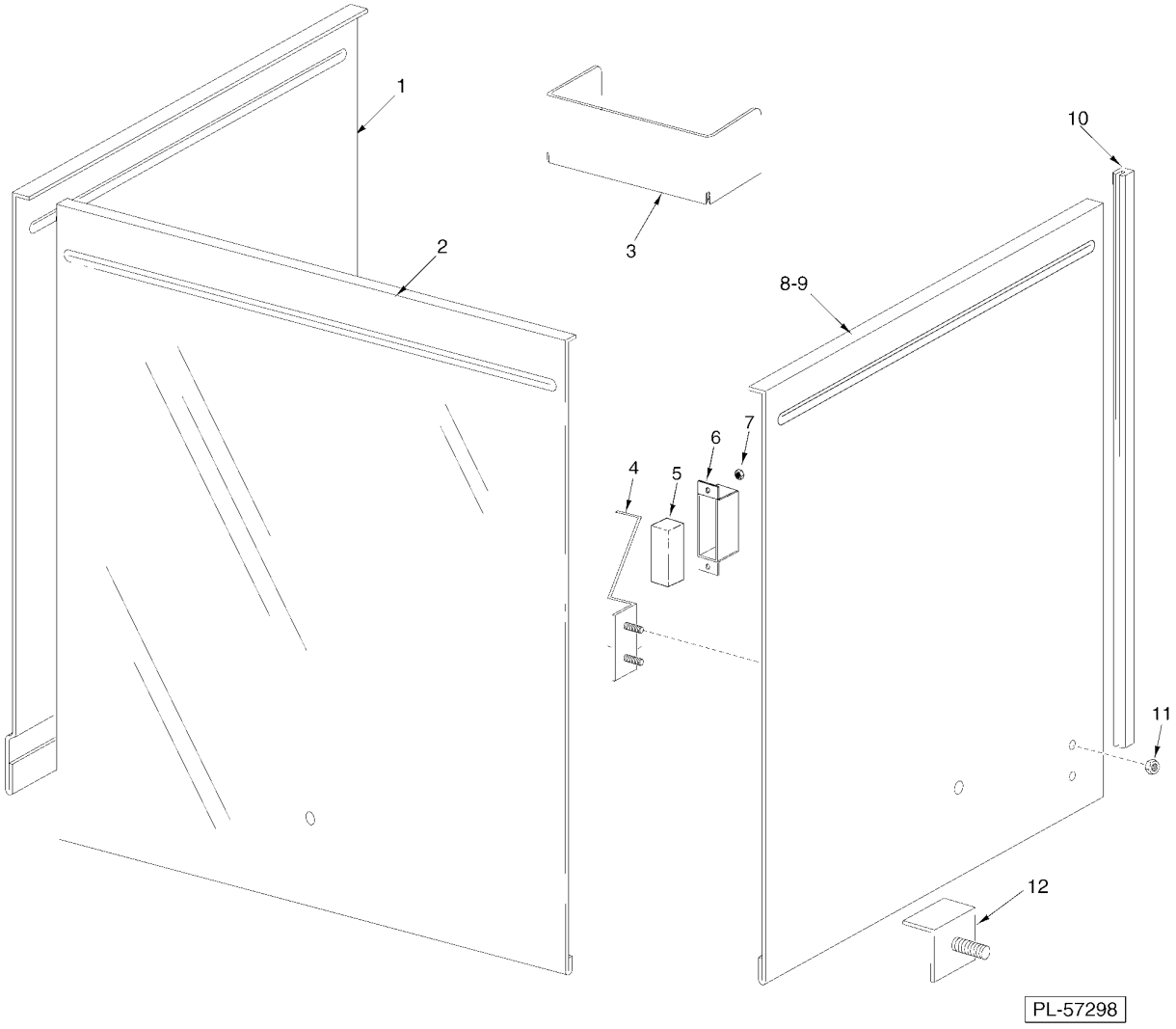

DOOR AM14C (CORNER)

DOOR AM14C (CORNER)

ILLUS. PL-57298	PART NO.	NAME OF PART	AMT.
1	00-119005	Door - Inspection	1
2	00-119098	Door - Counterbalanced (Front)	1
3	00-892037	Deflector - Vent	1
4	00-748056	Bracket - Magnet	1
5	00-290160	Magnet	1
6	00-290159	Retainer - Magnet	1
7	NS-031-50	Stop Nut 6-32 Hex (SST)	1
8	00-748055	Door - Counterbalanced (RH)	1
9	00-119006-00001	Door - Counterbalanced (RH) (Used With Side Mount Door Switch) (Not Shown)	1
10	00-112378-00023	Guide - Door	2
11	NS-047-82	Stop Nut - Special 1/4-20 Hex	2
12	00-289117-00002	Door Stop Assy	2

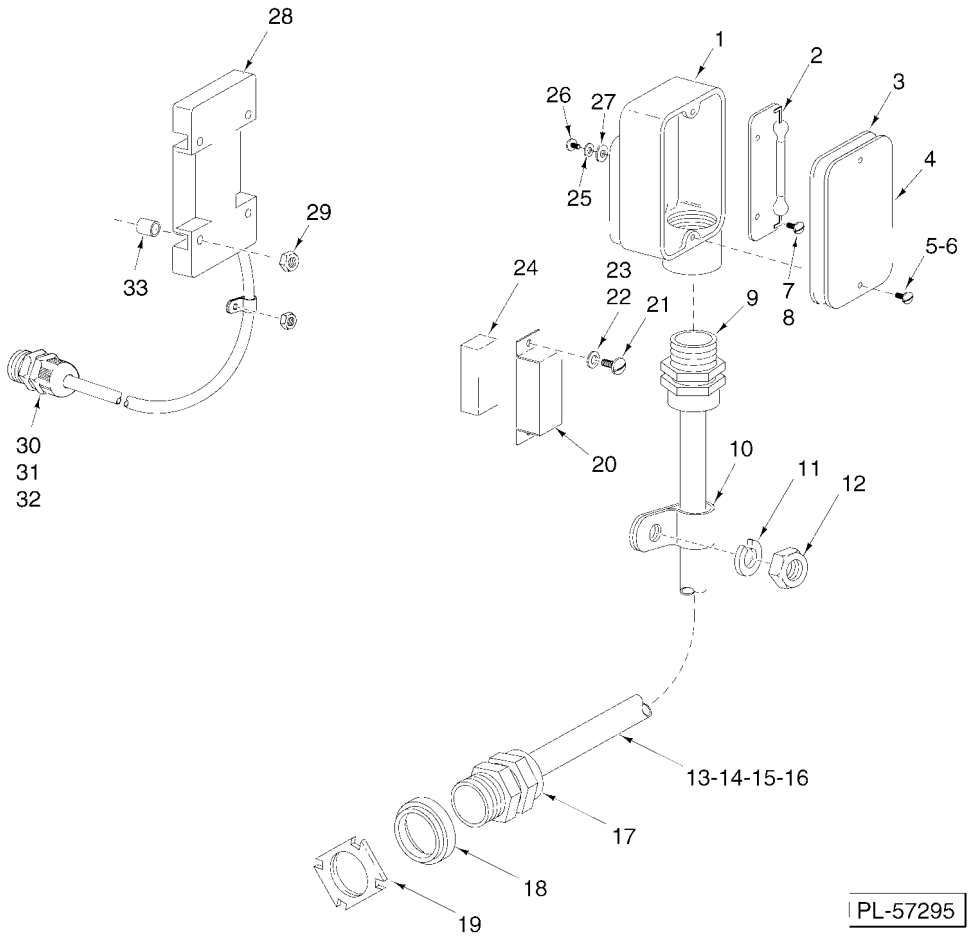

DOOR INTERLOCK

DOOR INTERLOCK

ILLUS. PL-57295	PART NO.	NAME OF PART	AMT.
1	00-436069	Housing - Cycle Switch	1
2	00-436071	Retainer - Switch Weldment (Switch Included)	1
3	00-436073	Gasket - Housing	1
4	00-436072	Cover - Housing	1
5	SC-093-03	Mach. Screw 8-32 x 3/8 Slotted Pan Hd. (SST)	2
6	WL-006-02	Lockwasher #8 Helical (SST)	2
7	SC-115-26	Mach. Screw 6-32 x 5/16 Pan Hd	2
8	WL-006-42	Lockwasher #6 Medium	2
9	FE-022-84	Connector - Strain Relief	1
10	00-078752-00002	Retainer (3/4 In.)	4
11	WL-006-07	Lockwasher #10 Helical (SST)	2
12	NS-011-18	Nut 10-24 Hex (SST)	2
13	00-294514	Door Interlock Cable Assy. (RH Controls) (Previous Construction)	1
14	00-294514-00012	Door Interlock Assy. (RH Controls) (Current Construction)	1
15	00-294514-00002	Door Interlock Cable Assy. (LH Controls) (Previous Construction)	1
16	00-294514-00013	Door Interlock Assy. (LH Controls) (Current Construction)	1
17	FE-022-84	Connector - Strain Relief	1
18	FE-008-10	1/2 Gasket Assy. (Previous Construction)	1
19	FE-006-05	Lock Nut 1/2 (Previous Construction)	1
20	00-435950	Retainer - Magnet	1
21	SC-115-26	Mach. Screw 6-32 x 5/16 Pan Hd	2
22	WS-023-01	Washer (SST)	2
23	NS-031-50	Stop Nut 6-32 Hex (SST)	2
24	00-436091	Magnet - Door Cycle Switch	1
25	WL-006-07	Lockwasher #10 Helical (SST)	2
26	SC-066-06	Mach. Screw 10-24 x 1/2 Phil. Truss Hd. (SST)	2
27	WS-029-79	Washer	2
28	00-749348-00002	Switch - Door	1
29	NS-031-50	Stop Nut 6-32 Hex (SST)	4
30	FE-008-10	1/2 Gasket Assy. (Previous Construction)	1
31	FE-024-88	Lock Nut - Electric 1/2 (Nylon)	1
32	FE-022-84	Connector - Strain Relief	1
33	00-118349-00004	Standoff - Reed Board (1/4 Lg.)	2
	00-436910	Kit - Door Interlock (Incls. Items 1 thru 6 & 20 thru 27)	1

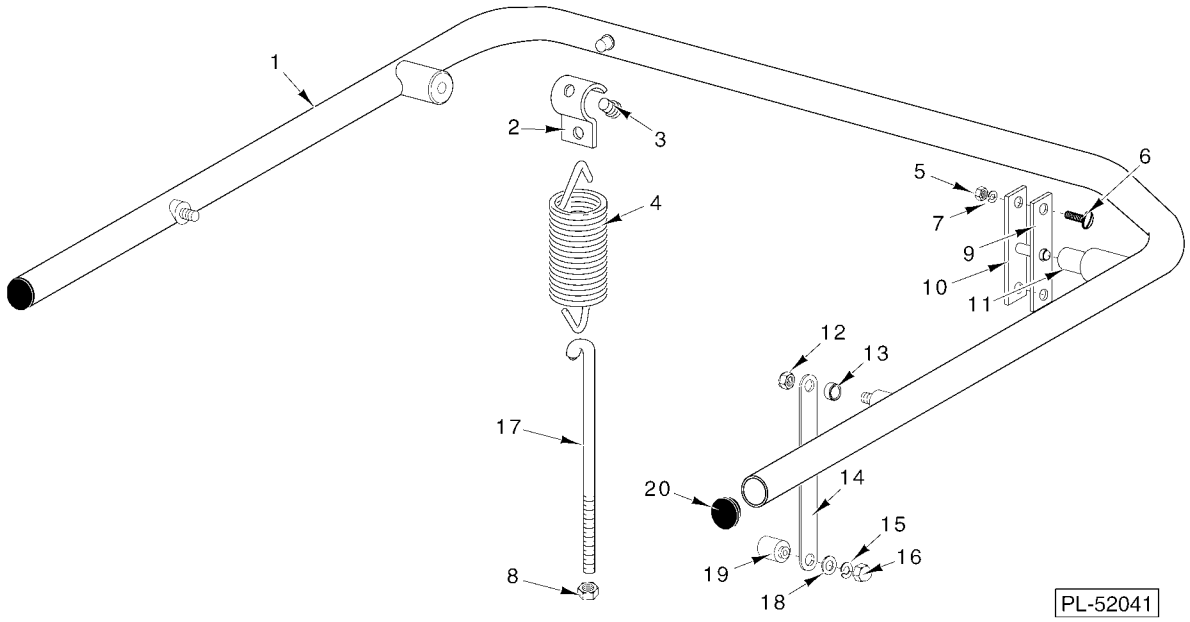

DOOR LIFT AM14 & 14P (STRAIGHT-THRU)

DOOR LIFT AM14 & 14P (STRAIGHT-THRU)

ILLUS. PL-52041	PART NO.	NAME OF PART	AMT.
1	00-475200-00001	Door Lift	1
2	00-079008	Hanger - Spring	1
3	00-119055	Button - Bearing	2
4	00-119079-00001	Spring - Counterbalanced	1
5	NS-015-11	Nut 5/16-18 Hex (SST)	4
6	SC-053-16	Mach. Screw 5/16-18 x 5/8 Truss Hd	4
7	WL-006-23	Lockwasher 5/16 Helical (SST)	4
8	NS-015-11	Nut 5/16-18 Hex (SST)	2
9	00-473432	Gasket - Door Lift	2
10	00-119017	Bearing Bracket & Pin Assy	2
11	00-119104	Bushing - Door Lift Pin	2
12	NS-032-35	Stop Nut 5/16-18 Flexloc	2
13	00-074068	Spacer - Door Link	2
14	00-119011	Link - Door	2
15	WL-006-23	Lockwasher 5/16 Helical (SST)	2
16	NS-025-09	Crown Nut 5/16-18 (SST)	2
17	00-186334-00002	Hook - Spring	1
18	WS-005-32	Washer (SST)	2
19	00-119046	Pin - Door Lift	2
20	00-474831	Plug - Handle	2

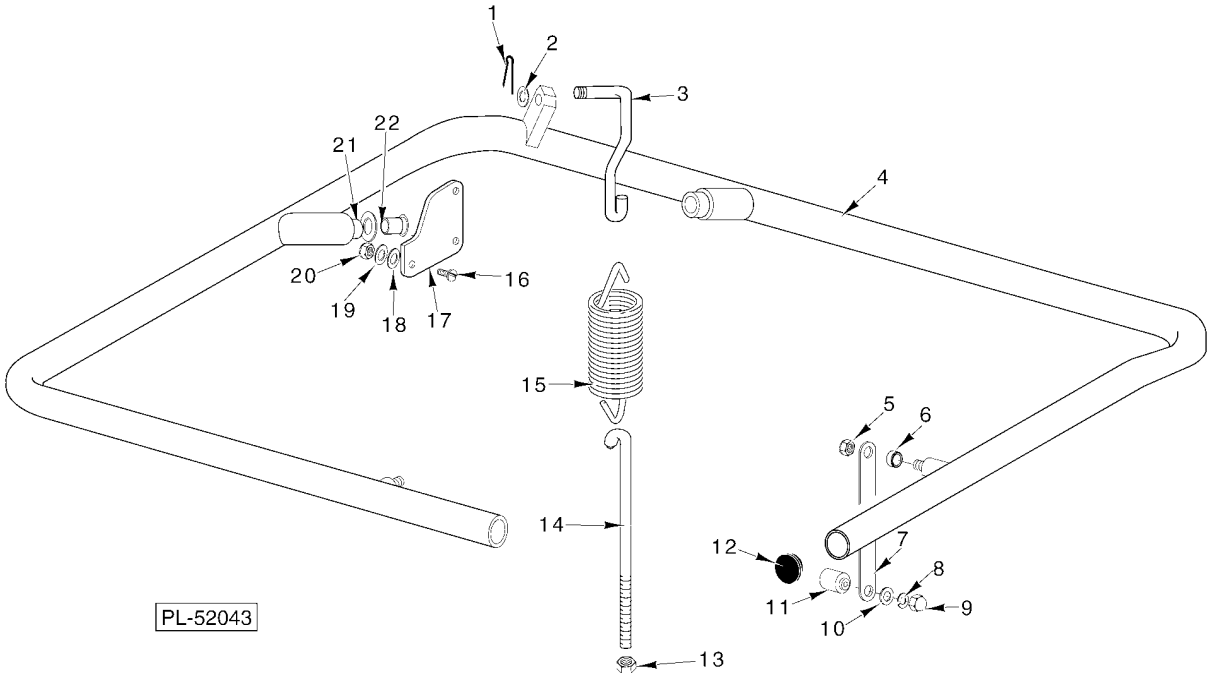

DOOR LIFT AM14C (CORNER)

DOOR LIFT AM14C (CORNER)

ILLUS. PL-52043	PART NO.	NAME OF PART	AMT.
1	PC-005-11	Cotter Pin 3/32	AR
2	WS-017-08	Washer (0.328 x 0.625 x 0.062) (SST)	1
3	00-119072	Hook - Spring (Upper)	1
4	00-475203	Door Lift	1
5	NS-032-35	Stop Nut 5/16-18 Flexloc	2
6	00-119048	Spacer - Door Link	2
7	00-119042	Link - Door Lift	2
8	WL-006-23	Lockwasher 5/16	2
9	NS-025-09	Crown Nut 5/16-18 (SST)	2
10	WS-005-32	Washer (SST)	2
11	00-119046	Pin - Door Lift	2
12	00-474831	Plug - Handle	2
13	NS-015-11	Nut 5/16-18 Hex (SST)	2
14	00-186334-00002	Hook - Spring	2
15	00-119079-00002	Spring - Counterbalance	1
16	SC-053-16	Mach. Screw 5/16-18 x 5/8 Truss Hd	8
17	00-119272	Pivot Assy	2
18	WS-017-08	Washer (0.328 x 0.625 x 0.062) (SST)	8
19	WL-006-23	Lockwasher 5/16 Helical (SST)	8
20	NS-015-11	Nut 5/16-18 Hex (SST)	8
21	WS-010-42	Washer	6
22	00-074532	Bushing	2

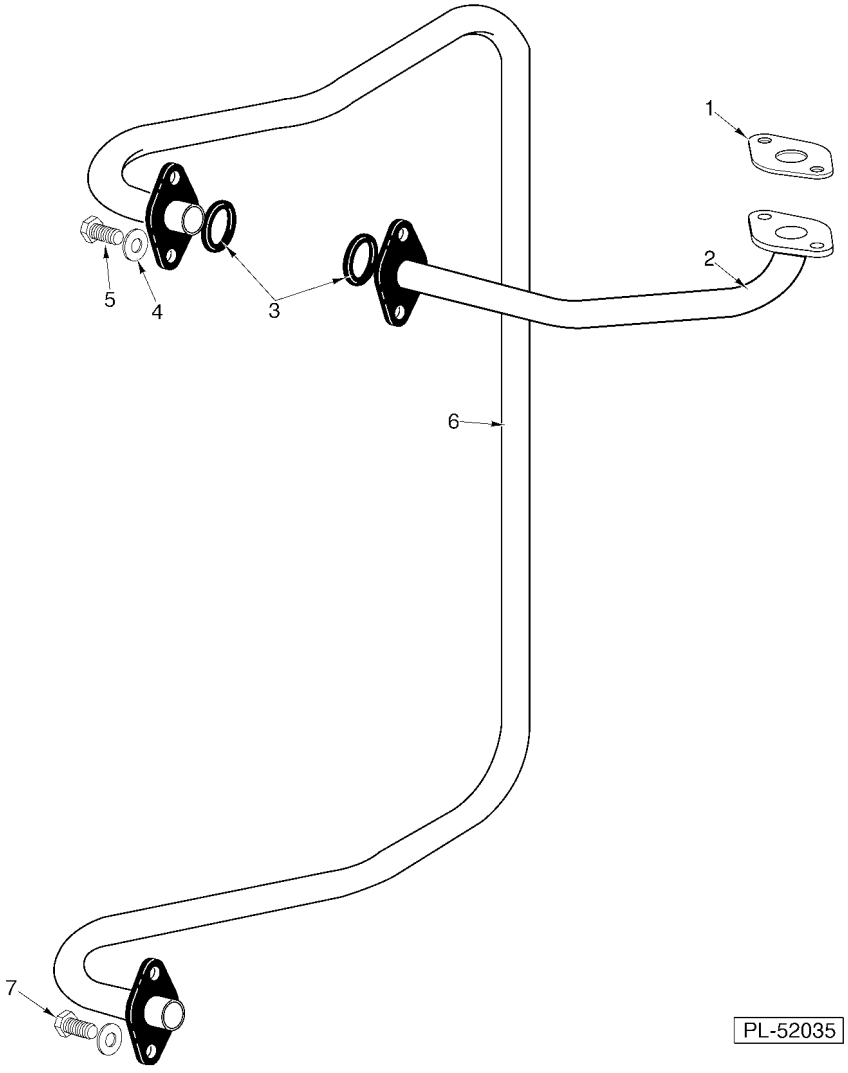

INSIDE RINSE PIPING

INSIDE RINSE PIPING

ILLUS. PL-52035	PART NO.	NAME OF PART	AMT.
1	00-276407	Gasket - Rinse Pipe	1
2	00-289086	Fill Tube Assy	1
3	00-067500-00009	O-Ring	3
4	WL-006-23	Lockwasher 5/16 Helical (SST)	6
5	SC-041-10	Cap Screw 5/16-18 x 5/8 Hex Hd. (SST)	6
6	00-474869	Rinse Connector & Flange Assy	1
7	SC-041-09	Cap Screw 5/16-18 x 1/2 Hex Hd. (SST)	2

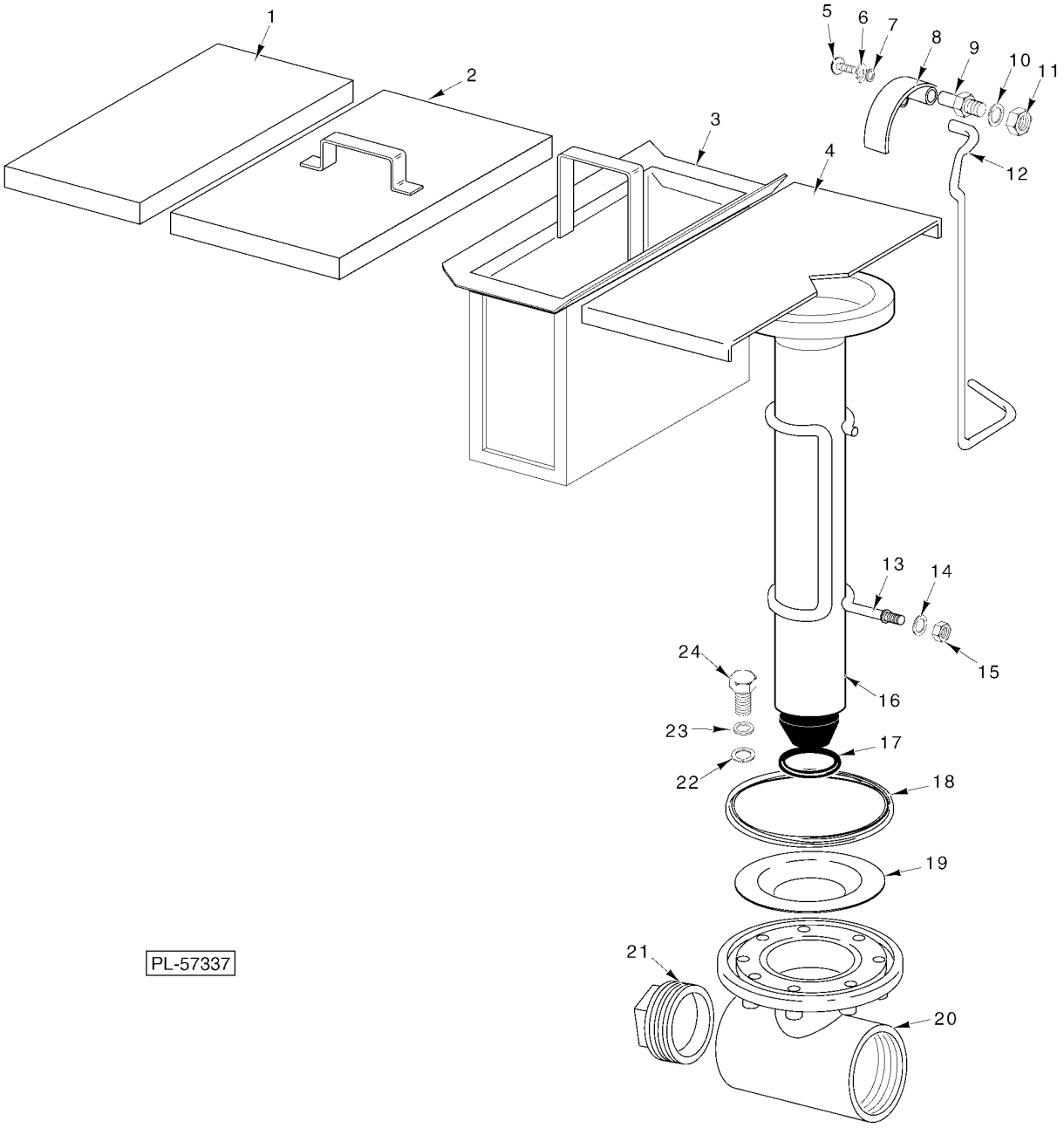

STRAINER AND DRAIN

STRAINER AND DRAIN

ILLUS. PL-57337	PART NO.	NAME OF PART	AMT.
1	00-289112	Cover - Sump	1
2	00-118967	Strainer - Slanted	1
3	00-118999	Strainer Basket Assy	1
4	00-289111	Cover - Overflow	1
5	SC-021-22	Mach. Screw 10-24 x 3/8 Slotted Rd. Hd. (SST)	1
6	WL-006-07	Lockwasher #10 Helical (SST)	1
7	WS-023-34	Washer	1
8	00-119121	Drain Lever Assy	1
9	00-119116	Axle - Drain Lever	1
10	WL-006-17	Lockwasher 1/4 Helical (SST)	1
11	NS-015-01	Nut 1/4-20 Hex (SST)	1
12	00-119119	Rod - Overflow Lift	1
13	00-277025	Guide	1
14	WL-006-17	Lockwasher 1/4 Helical (SST)	2
15	NS-047-82	Stop Nut - Special 1/4-20 Hex (SST)	2
16	00-119099-00002	Tube - Overflow	1
17	00-067500-00120	O-Ring (Overflow Tube)	1
18	00-067500-00082	O-Ring	1
19	00-119239	Sleeve	1
20	00-118976	Body - Drain Valve	1
21	FP-028-32	Pipe Plug 2 In. Sq. Hd	1
22	WS-017-08	Washer (0.328 x 0.625 x 0.062) (SST)	8
23	WL-006-23	Lockwasher 5/16 Helical (SST)	8
24	SC-041-11	Cap Screw 5/16-18 x 3/4 Hex Hd. (SST)	8

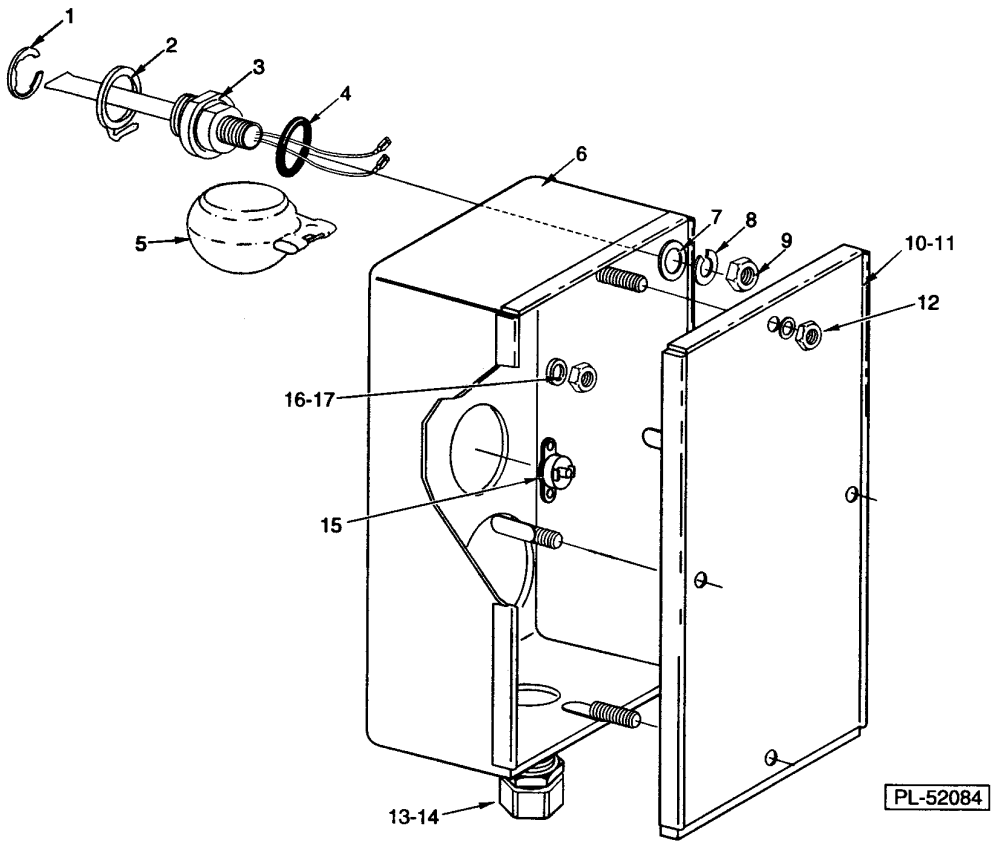

LOW WATER PROTECTION & HEAT BOX
(STEAM & ELECTRIC HEAT)

**LOW WATER PROTECTION & HEAT BOX
(STEAM & ELECTRIC HEAT)**

LOW WATER PROTECTION & HEAT BOX (STEAM & ELECTRIC HEAT)

ILLUS. PL-52084	PART NO.	NAME OF PART	AMT.
1	RR-010-13	Retaining Ring	1
2	00-112467	Retainer - Float	1
3	00-271621	Probe & Switch Assy. (4 Wire) (Temperatures & Water Level)	1
4	00-067500-00072	O-Ring	1
5	00-122674	Float Assy	1
6	00-474567-00001	Heat Box (Use with Electric Heat)	1
7	WS-010-40	Washer - Thrust	1
8	WL-014-31	Lockwasher 1/2 External Shakeproof (SST)	1
9	NS-018-28	Jam Nut 1/2-20 Hex (SST)	1
10	00-474574-00002	Lid Assy. - Heat Box (Steam/Electric)	1
11	00-474569	Gasket - Electric Heat Box	1
12	NS-031-15	Stop Nut - Special 10-24 Hex (SST)	4
13	FE-022-84	Connector - Strain Relief	1
14	FE-006-05	Lock Nut 1/2	1
15	00-294618	Temperature Control Kit (Incls. Spacers & Nuts) (Use with Electric Heat)	1
16	NS-015-01	Nut 1/4-20 Hex (SST)	4
17	WL-006-17	Lockwasher 1/4 Helical (SST)	4
	00-289121	Kit - Low Water Protection	1
	PB-004-08	Plug Bottom 7/8 (Heyco 2703)	1

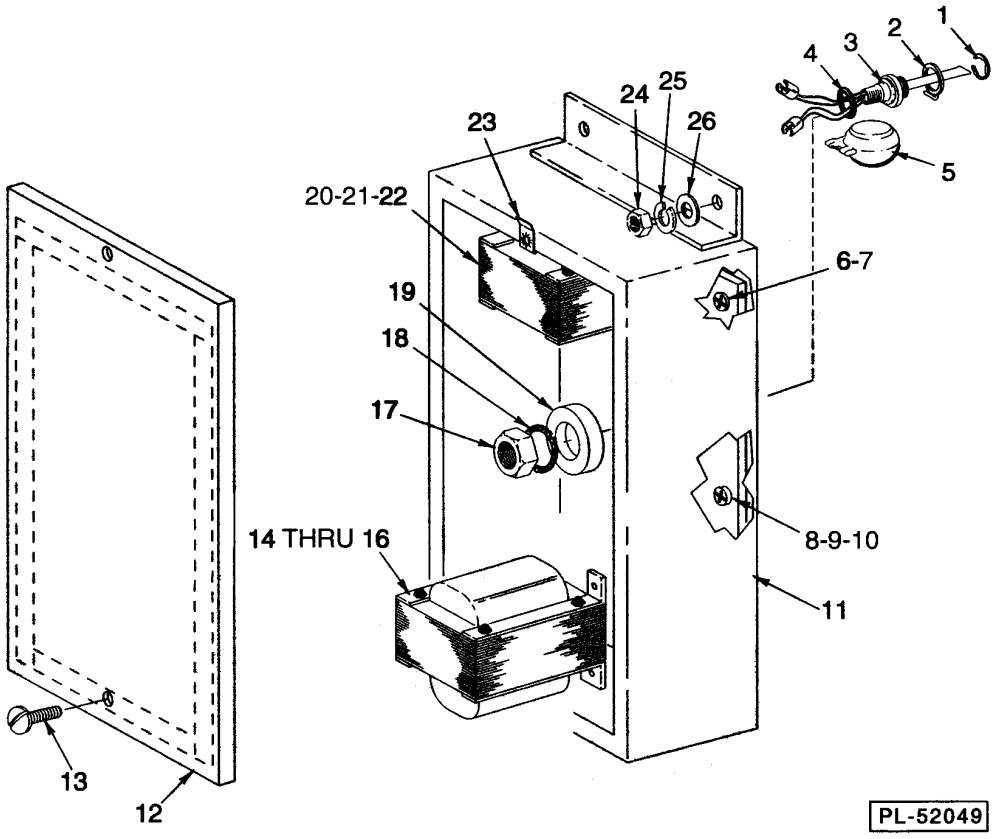

LOW WATER PROTECTION & TRANSFORMER BOX (GAS HEAT)

LOW WATER PROTECTION & TRANSFORMER BOX (GAS HEAT)

LOW WATER PROTECTION & TRANSFORMER BOX (GAS HEAT)

ILLUS. PL-52049	PART NO.	NAME OF PART	AMT.
1	RR-010-13	Retaining Ring	1
2	00-112467	Retainer - Float	1
3	00-271621	Switch & Probe Assy. (4-Wire) (Long)	1
4	00-067500-00072	O-Ring	1
5	00-122674	Float Assy	1
6	SC-071-11	Mach. Screw 10-24 x 3/8 Phil. Truss Hd	4
7	WL-007-12	Lockwasher 10 External Shakeproof	4
8	SD-008-25	Self-Tapping Screw 10-16 x 1/2 Phil. Pan Hd., Type B	1
9	WL-007-12	Lockwasher #10 External Shakeproof (Place Under Ground Connectors)	1
10	00-473506	Base Plate (Transformer Box)	1
11	00-473508-00001	Box - Transformer	1
12	00-473509	Lid - Transformer Box	1
13	SC-053-02	Mach. Screw 10-24 x 1/2 Slotted Truss Hd. (SST)	2
14	00-294500-046-2	Transformer (300 VA) Pilot Control	1
15	SD-008-25	Self-Tapping Screw 10-16 x 1/2 Phil. Pan Hd., Type B	4
16	WL-007-12	Lockwasher 10 External Shakeproof	1
17	NS-015-01	Nut 1/4-20 Hex (SST)	1
18	WL-006-17	Lockwasher 1/4 Helical (SST)	1
19	WS-010-40	Washer - Thrust	2
20	00-294500-026-1	Transformer (All Voltages) (Gas Heat)	1
21	SD-008-25	Self-Tapping Screw 10-16 x 1/2 Phil. Pan Hd., Type B	4
22	WL-007-12	Lockwasher 10 External Shakeproof	1
23	00-074348	Speed Nut 10-24	2
24	NS-015-01	Nut 1/4-20 Hex (SST)	4
25	WL-006-17	Lockwasher 1/4 Helical (SST)	4
26	WS-017-06	Washer (SST)	4
	00-526454-00002	Foam Tape (Use with Item 12)	AR

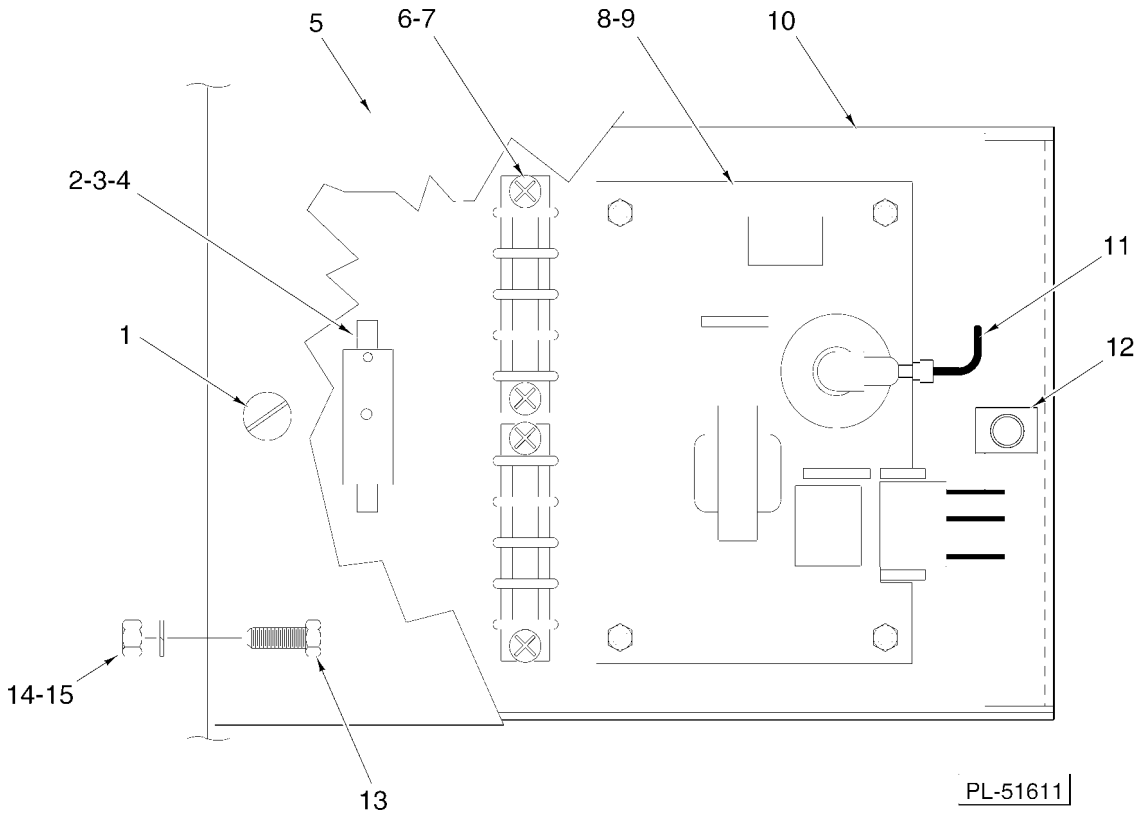

GAS HEAT CONTROL BOX

GAS HEAT CONTROL BOX

ILLUS. PL-51611	PART NO.	NAME OF PART	AMT.
1	SC-053-02	Mach. Screw 10-24 x 1/2 Slotted Truss Hd. (SST)	2
2	00-294436-00003	Block - Fuse	1
3	FE-021-19	Fuse (3.2 Amp., 250 V.)	1
4	SD-008-17	Self-Tapping Screw 6-20 x 3/8 Phil. Bndg. Hd., Type B	1
5	00-473501	Cover - Gas Heat Box	1
6	00-294325-014-1	Terminal Block	2
7	SC-021-15	Mach. Screw 8-32 x 1/2 Rd. Hd., Slotted	4
8	00-436853	Ignitor Board (24 VAC)	1
9	NS-031-50	Stop Nut 6-32 Hex (SST)	4
10	00-892110	Gas Heat Box	1
11	00-271146-00002	Cable - High Voltage	1
12	00-074348	Speed Nut 10-24	2
13	SC-041-10	Cap Screw 5/16-18 x 5/8 Hex Hd. (SST)	2
14	WL-006-23	Lockwasher 5/16 Helical (SST)	2
15	NS-015-11	Nut 5/16-18 Hex (SST)	2
	00-435538	Wire Harness - Ignitor Board	1

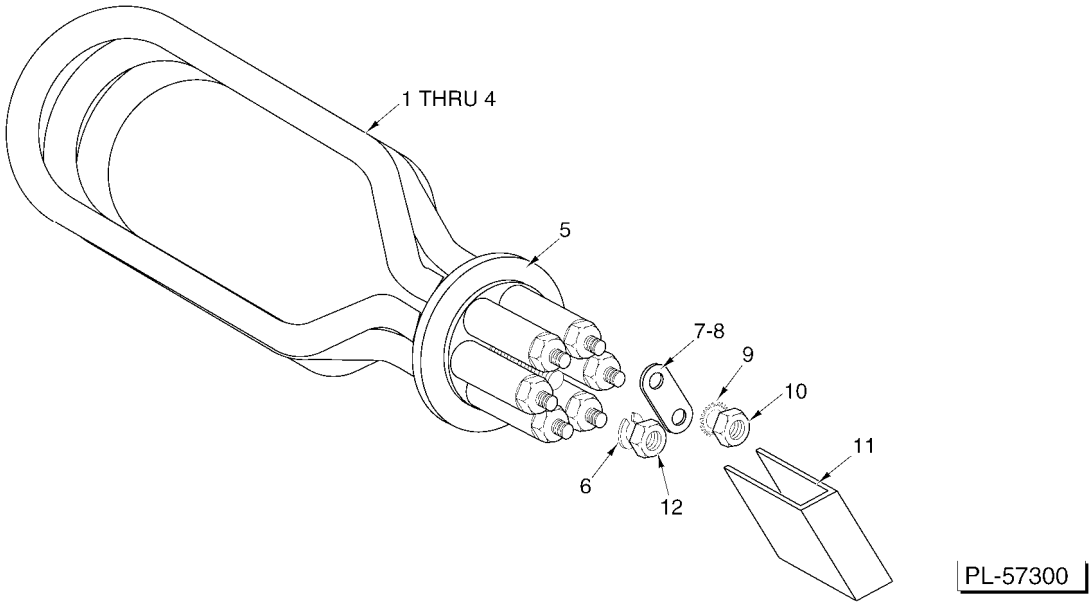

ELECTRIC HEAT

ELECTRIC HEAT

ILLUS. PL-57300	PART NO.	NAME OF PART	AMT.
1	00-119078-00006	Heate-Electric(100-120V.,60Hz.,1 Ph.)(Incls. Items 5,7,8,&10)(Prev. Construction)	1
2	00-119078-00007	Heater-Electric(208-240V.,60Hz.,1&3Ph.)(208-240V.,50Hz.,3Ph.)(Incls. Items 5,7,8,&10)	1
3	00-119078-00008	Heater - Electric (380-415 V., 50 Hz., 3 Ph.) (Incls. Items 5, 7, 8, & 10)	1
4	00-119078-00009	Heater - Electric (480 V., 60 Hz., 3 Ph.) (Incls. Items 5, 7, 8, & 10)	1
5	00-067500-00034	O-Ring (Heater) (Use W/Items 1, 2, 3, & 4)	1
6	WL-006-32	Lockwasher 7/16 Light	1
7	00-288543-00002	Jumper - Short	1
8	00-288543-00001	Jumper - Long	1
9	WL-014-07	Lockwasher #10 External Shakeproof (SST)	AR
10	NS-024-06	Acorn Nut 7/16-20	AR
11	00-950696	Insulator - Terminal (Above 250 V.)	1
12	NS-024-06	Acorn Nut 7/16-20	1

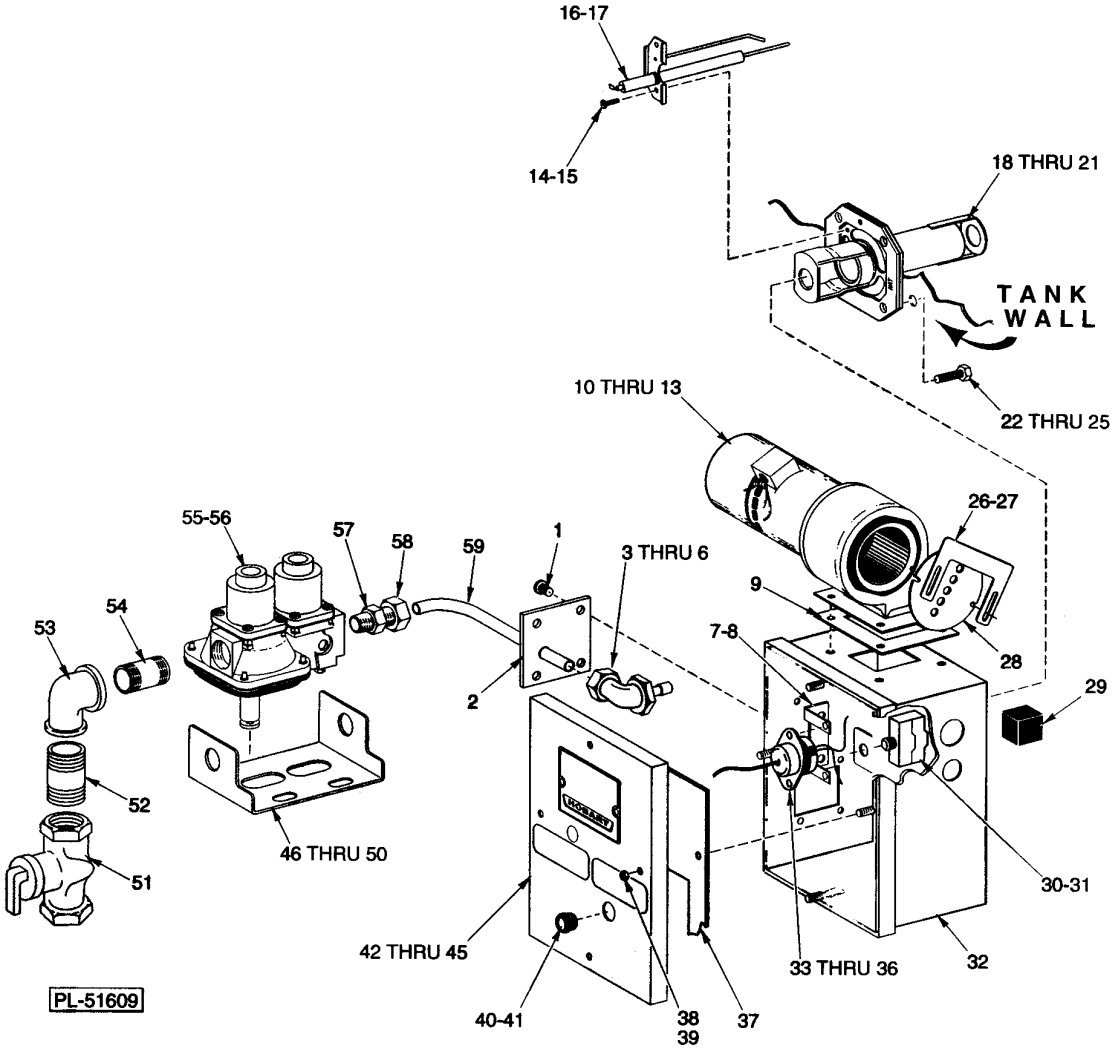

GAS HEAT COMPONENTS
(CURRENT CONSTRUCTION)

GAS HEAT COMPONENTS
(CURRENT CONSTRUCTION)

GAS HEAT COMPONENTS
(CURRENT CONSTRUCTION)

ILLUS. PL-51609	PART NO.	NAME OF PART	AMT.
1	SC-053-05	Mach. Screw 10-24 x 3/8 Slotted Truss Hd. (SST)	4
2	00-328440	Plate - Gas Line	1
3	00-435701-00002	Angle Fitting - LP Gas #43 Drill (0.089), 7/16 (NAT 60 Hz.)	1
4	00-435701-00002	Angle Fitting-LP Gas #43 Drill(0.089),7/16(NAT 50Hz.)(ML-32614,ML32615 & ML-110025)	1
5	00-435701-00006	Angle Fitting 6/16 (PRO 60 Hz.)	1
6	00-435701-00005	Angle Fitting 7/16 (PRO 50 Hz.) (ML-32614, ML-32615, & ML-110025)	1
7	00-271122-00002	Bracket - Thermostat	1
8	SC-053-05	Mach. Screw 10-24 x 3/8 Slotted Truss Hd. (SST)	2
9	00-328473	Gasket - Blower	1
10	00-328476-00001	Blower - Motor & Switch	1
11	SC-041-05	Cap Screw 1/4-20 x 5/8 Hex Hd	4
12	WL-014-10	Lockwasher 1/4 External Shakeproof	1
13	NS-031-21	Stop Nut 1/4-20 Hex (SST)	4
14	SC-093-03	Mach. Screw 8-32 x 3/8 Slotted Pan Hd. (SST)	2
15	WL-014-05	Lockwasher #8 External Shakeproof (SST)	2
16	00-436792	Electrode - Spark/Sense (NAT)	1
17	00-436067	Electrode - Spark/Sense (PRO)	1
18	00-328649	Burner - Weldment (NAT, 60 Hz.)	1
19	00-473518	Burner - Weldment (NAT, 50 Hz.) (ML-32614, ML-32615, & ML-110025)	1
20	00-436761	Burner - Weldment (PRO, 60 Hz.)	1
21	00-473516	Burner - Weldment (PRO, 50 Hz.) (ML-32614, ML-32615, & ML-110025)	1
22	SC-121-43	Cap Screw 7/16-14 x 1 3/4 Hex Hd	4
23	WS-021-07	Washer	8
24	WL-019-77	Lockwasher 7/16 Medium	4
25	NS-047-97	Nut 7/16-14 Hex	4
26	00-328428	Plate - Adjusting	1
27	SD-012-20	Self-Tapping Screw 8-32 x 1/2 Phil. Truss Hd., Type T	2
28	00-473505	Plate - Restrictor	1
29	00-328450	Plug - Rubber (Conduit)	4
30	00-087711-153-1	Switch - Limit	1
31	00-328508	Insulator - Switch	1
32	00-328465-00002	Box - Heat (LH)	1
33	00-271123	Protector - High Limit	1
34	SC-021-08	Mach. Screw 6-32 x 3/8 Slotted Rd. Hd. (SST)	2
35	NS-031-50	Stop Nut 6-32 Hex (SST)	2
36	00-293946	Sleeve - Lead	1
37	00-328429	Gasket - Heat Box Lid	1
38	WS-019-06	Washer	4
39	NS-031-16	Stop Nut 10-24 Hex Elastic (SST)	4
40	00-435024	Eye - Box (Gas Heat)	1
41	NS-035-25	Lock Nut 3/4-16 Palnut	1
42	00-473531-00001	Lid Assy. - Heat Box (NAT, 60 Hz.)	1
43	00-473531-00002	Lid Assy. - Heat Box (NAT, 50 Hz.) (ML-32614, ML-32615, & ML-110025)	1
44	00-473531-00003	Lid Assy. - Heat Box (PRO, 60 Hz.)	1
45	00-473531-00004	Lid Assy. - Heat Box (PRO, 50 Hz.) (ML-32614, ML-32615, & ML-110025)	1
46	00-473482	Bracket - Gas Valve Mounting	1
47	SC-041-10	Cap Screw 5/16-18 x 5/8 Hex Hd. (SST)	2
48	WS-017-08	Washer (0.328 x 0.625 x 0.062) (SST)	2
49	WL-006-23	Lockwasher 5/16 Helical (SST)	2
50	NS-015-11	Nut 5/16-18 Hex (SST)	2
51	00-291988-00003	Valve - Gas (Shut Off)	1
52	FP-059-61	Pipe 1/2 x 1-1/4 TBE	1
53	FP-013-15	Elbow - Pipe 1/2 x 90 Deg	1
54	FP-035-94	Pipe 1/2 x 1 1/2 Lg. TBE	1
55	00-473481-00001	Valve - Regulator (NAT Gas)	1

GAS HEAT COMPONENTS
(CURRENT CONSTRUCTION)

ILLUS. PL-51609	PART NO.	NAME OF PART	AMT.
56	00-473481-00002	Valve - Regulator (PRO Gas)	1
57	FP-026-14	Bushing - 1/2 to 3/8	1
58	00-435702	Connector - Male 7/16	1
59	00-328425-00003	Tube - Gas	1
	00-294357-00001	Housing - Connector (Nat)	1
	00-294357-00002	Housing - Connector (Black)	1
	00-293940	Gas Electrode Kit	1
	00-328598	Kit - Hi-Limit Protector (Incls. Item 33)	1
	00-526454-00002	Tape - Foam	AR

NOTES

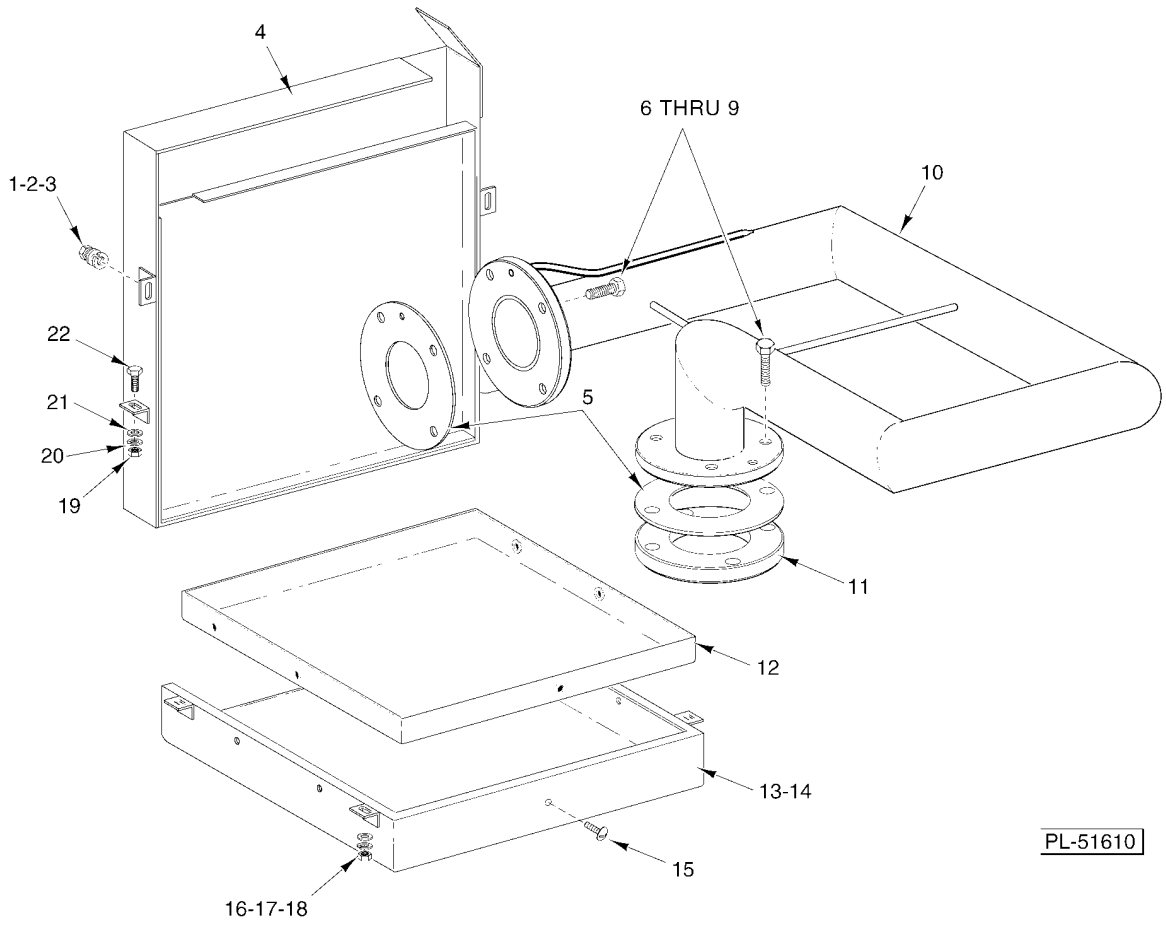

GAS HEAT IMMERSION TUBE SHROUD AND FLUE

GAS HEAT IMMERSION TUBE SHROUD AND FLUE

ILLUS. PL-51610	PART NO.	NAME OF PART	AMT.
1	WS-017-06	Washer (SST)	2
2	WL-006-17	Lockwasher 1/4 Helical (SST)	2
3	NS-015-01	Nut 1/4-20 Hex (SST)	2
4	00-473494	Flue - Weldment	1
5	00-436100	Gasket - Immersion Tube	2
6	SC-121-43	Cap Screw 7/16-14 x 1 3/4 Hex Hd	8
7	WS-021-07	Washer	16
8	WL-019-77	Lockwasher 7/16 Medium	8
9	NS-047-97	Nut 7/16-14 Hex	8
10	00-473123	Tube - Immersion	1
11	00-435952	Flange - Immersion Tube	1
12	00-473487-00001	Liner - Shroud	1
13	00-473485-00001	Shroud - Weldment	1
14	00-473488	Insulation - Shroud	1
15	SC-053-02	Mach. Screw 10-24 x 1/2 Slotted Truss Hd. (SST)	5
16	WS-017-06	Washer (SST)	4
17	WL-006-17	Lockwasher 1/4 Helical (SST)	4
18	NS-015-01	Nut 1/4-20 Hex (SST)	4
19	NS-015-11	Nut 5/16-18 Hex (SST)	2
20	WL-006-23	Lockwasher 5/16 Helical (SST)	2
21	WS-017-08	Washer (0.328 x 0.625 x 0.062) (SST)	2
22	SC-041-10	Cap Screw 5/16-18 x 5/8 Hex Hd. (SST)	2
	00-474152	Shroud Assy. (Incls. Items 12 thru 15)	1

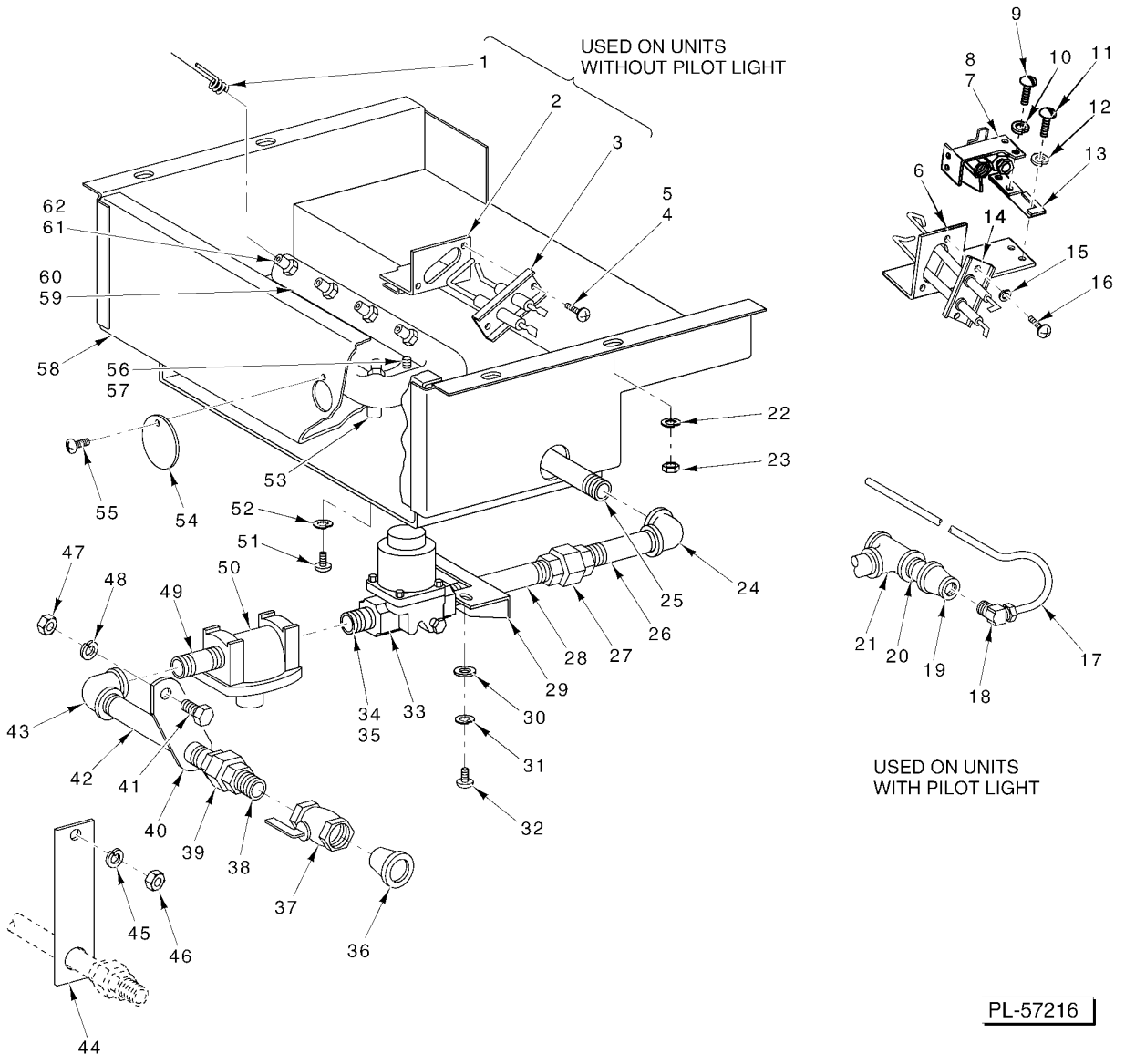

GAS BURNER
(PREVIOUS CONSTRUCTION)

GAS BURNER
(PREVIOUS CONSTRUCTION)

ILLUS. PL-57216B	PART NO.	NAME OF PART	AMT.
1	00-293037	Electrode - Grounding	8
2	00-293038	Support - Electrode	1
3	00-293039	Electrode Assy	1
4	SC-021-91	Mach. Screw 8-32 x 5/16 Slotted Rd. Hd. (SST)	2
5	WL-006-01	Lockwasher #8 Helical (SST)	2
7	00-105045-00001	Pilot (NAT or Mixed Gas)	1
8	00-105045-00002	Pilot (LP Gas)	1
9	SC-021-80	Mach. Screw 10-32 x 3/8 Slotted Rd. Hd (SST)	2
10	WL-006-07	Lockwasher #10 Helical (SST)	2
11	SC-021-80	Mach. Screw 10-32 x 3/8 Slotted Rd. Hd (SST)	2
12	WL-006-07	Lockwasher #10 Helical (SST)	2
15	WL-006-01	Lockwasher #8 Helical (SST)	2
16	SC-021-91	Mach. Screw 8-32 x 5/16 Slotted Rd. Hd. (SST)	2
17	00-023963-00011	Tube 1/4 In. O.D. (Gas)	1
18	FP-012-21	Elbow 90 Deg. (1/8 Male Pipe x 1/4 Tube)	1
19	FP-024-45	Coupling - 3/8 to 1/8 Reducing	1
20	FP-035-46	Pipe 3/8 x 1 Lg. TBE	1
21	FP-019-10	Tee - 3/8 X 3/8 X 3/8 (BLKSTL)	1
22	WL-006-17	Lockwasher 1/4 Helical (SST)	4
23	NS-015-01	Nut 1/4-20 Hex Fin	4
24	FP-013-11	Elbow 3/8 x 90 Deg	1
25	FP-035-63	Pipe 3/8 x 4 1/2 Lg. TBE	1
26	FP-035-60	Pipe 3/8 x 3 1/4 Lg. TBE	1
27	FP-022-06	Union 3/8	1
28	FP-035-61	Pipe 3/8 x 3 1/2 Lg. TBE	1
29	00-277809	Bracket - Control Box Mounting	2
30	WS-019-06	Washer	4
31	WL-006-06	Lockwasher #10 Helical (SST)	4
32	SC-021-22	Mach. Screw 10-24 x 3/8 Rd. Hd	4
33	00-288967	Gauge - Gas Valve Assy. (115 V., 60 Hz.)	1
34	FP-035-46	Pipe 3/8 x 1 Lg. TBE (NAT or Mixed Gas)	1
35	FP-035-62	Pipe 3/8 x 4 1/8 Lg. TBE (LP Gas)	1
36	00-119298	Plug - Pipe	1
37	00-291988-00002	Valve, Gas Cock 3/8 (Lever Handle)	1
38	FP-035-46	Pipe 3/8 x 1 Lg. TBE	1
39	FP-022-06	Union 3/8	1
40	00-119278	Support - Pipe (RH Controls)	1
41	SC-041-10	Cap Screw 5/16-18 x 5/8 Hex Hd. (RH Controls)	1
42	FP-035-65	Pipe 3/8 x 5 1/8 Lg. TBE	1
43	FP-013-11	Elbow 3/8 x 90 Deg	1
44	00-119301	Bracket - Pipe Support (LH Controls)	1
45	WL-006-17	Lockwasher 1/4 Medium (LH Controls)	1
46	NS-015-01	Nut 1/4-20 Hex Fin (LH Controls)	1
47	NS-015-11	Nut 5/16-18 Hex Fin. (RH Controls)	1
48	WL-006-23	Lockwasher 5/16 Medium (RH Controls)	1
49	FP-035-49	Pipe 3/8 x 1 1/2 Lg. TBE (NAT or Mixed Gas)	1
50	00-435400	Regulator - Pressure (NAT or Mixed Gas) (Service Kit)	1
51	SC-021-44	Mach. Screw 1/4-20 x 1 1/2 Slotted Rd. Hd (SST)	1
52	WL-006-17	Lockwasher 1/4 Helical (SST)	1
53	00-119151	Spacer - Burner	1
54	00-119171	Cover - Pilot Hole	1
55	SD-008-18	Self-Tapping Screw 8 x 3/8 Phil. Bndg. Hd., Type B	1
56	SC-021-23	Mach. Screw 10-24 x 1/2 Slotted Rd. Hd. (SST)	2
57	WL-006-07	Lockwasher #10 Helical (SST)	2
58	00-119146	Burner Housing Assy	1

GAS BURNER
(PREVIOUS CONSTRUCTION)

ILLUS. PL-57216B	PART NO.	NAME OF PART	AMT.
59	00-105172-00001	Gas Burner Assy. (NAT or Mixed Gas) (Incls. Item 61)	1
60	00-105172-00002	Gas Burner Assy. (LP Gas) (Incls. Item 62)	1
61	00-105763-00001	Jet - Gas Burner (NAT or Mixed Gas)	8
62	00-105763-00004	Jet - Gas Burner (LP Gas)	8
	00-120419-00001	Coil - Solenoid Valve (Pen Control Valve)	1
	00-288967	Coil - Solenoid Valve (White-Rodgers Valve)	1

NOTES

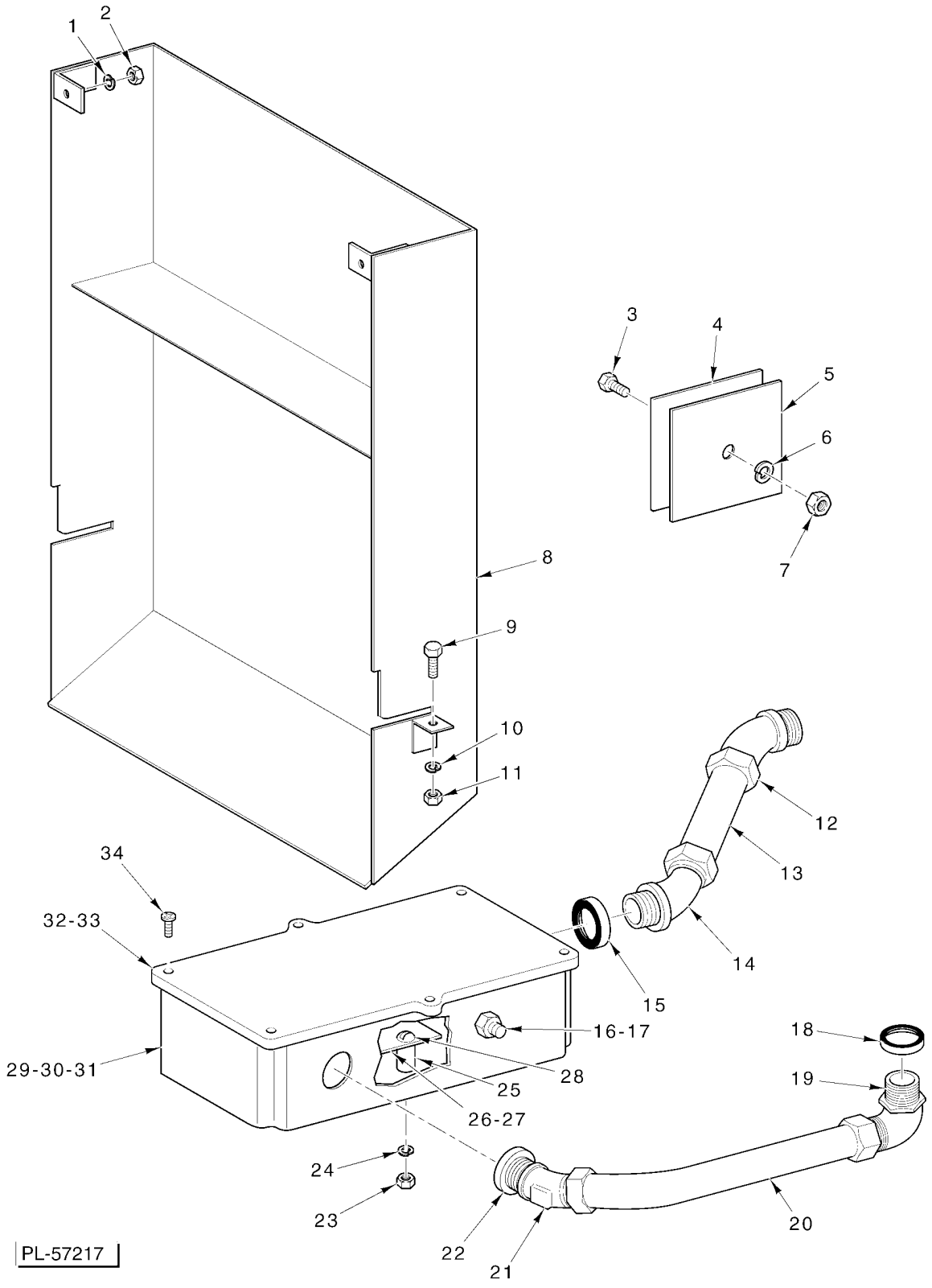

FLUE AND IGNITER CONTROL
(GAS HEAT)(PREVIOUS CONSTRUCTION)

FLUE AND IGNITER CONTROL
(GAS HEAT)(PREVIOUS CONSTRUCTION)

ILLUS. PL-57217	PART NO.	NAME OF PART	AMT.
1	WL-006-22	Lockwasher 5/16 Light	2
2	NS-015-11	Nut 5/16-18 Hex Fin	2
3	SC-041-28	Cap Screw 3/8-16 x 3/4 Hex Hd. (SST)	1
4	00-119152	Gasket - Cover Plate	1
5	00-119153	Plate - Electric Heater Cover	1
6	WL-006-27	Lockwasher 3/8 Helical (SST)	1
7	NS-015-13	Nut 3/8-16 Hex Fin	1
8	00-119090	Flue Assy	1
9	SC-041-11	Cap Screw 5/16-18 x 3/4 Hex Hd	2
10	WL-006-23	Lockwasher 5/16 Medium	2
11	NS-015-11	Nut 5/16-18 Hex Fin	2
12	FE-024-62	Connector 45 Deg. (3/4 Male Thd. x 3/4 Thinwall)	1
13	00-072654-00013	Conduit 3/4 x 2 (Thinwall)	1
14	FE-008-44	Connector 45 Deg. (3/4 Male Thd. x 3/4 Thinwall)	1
15	FE-008-11	3/4 Gasket Assy	1
16	00-121040	Switch - Thermal	1
17	WL-008-27	Lockwasher 3/8 Internal Shakeproof	1
18	FE-008-10	1/2 Gasket Assy	1
19	FE-007-07	Connector 90 Deg. Sealtite (1/2 Male Thd. x 1/2 Flex. Cnd.)	1
20	00-077658-00045	Conduit 1/2 x 12 Lg. (Waterproof)	1
21	FE-007-05	Connector 45 Deg. Sealtite (1/2 Male Thd. x 1/2 Flex. Cnd.)	1
22	FE-008-10	1/2 Gasket Assy	1
23	NS-009-12	Nut 8-32 Hex	3
24	WL-003-12	Lockwasher #8 Helical	3
25	00-121027	Spacer - Control Board	3
26	00-892611	Gas Heat Igniter Circuit Assy. (Service Kit)	1
27	00-119282	Insulator (Igniter Circuit)	1
28	SC-007-49	Mach. Screw 8-32 x 1 1/8 Slotted Rd. Hd	3
29	00-288469	Box - Control	1
30	FE-006-05	Lock Nut 1/2 Conduit	2
31	FE-006-51	Lock Nut 3/4 Conduit	2
32	00-289146-00002	Lid & Gasket Assy. (Incls. Item 33)	1
33	00-112005	Gasket (Lid)	1
34	SD-012-20	Self-Tapping Screw 8-32 x 1/2 Phil. Truss Hd., Type T	6

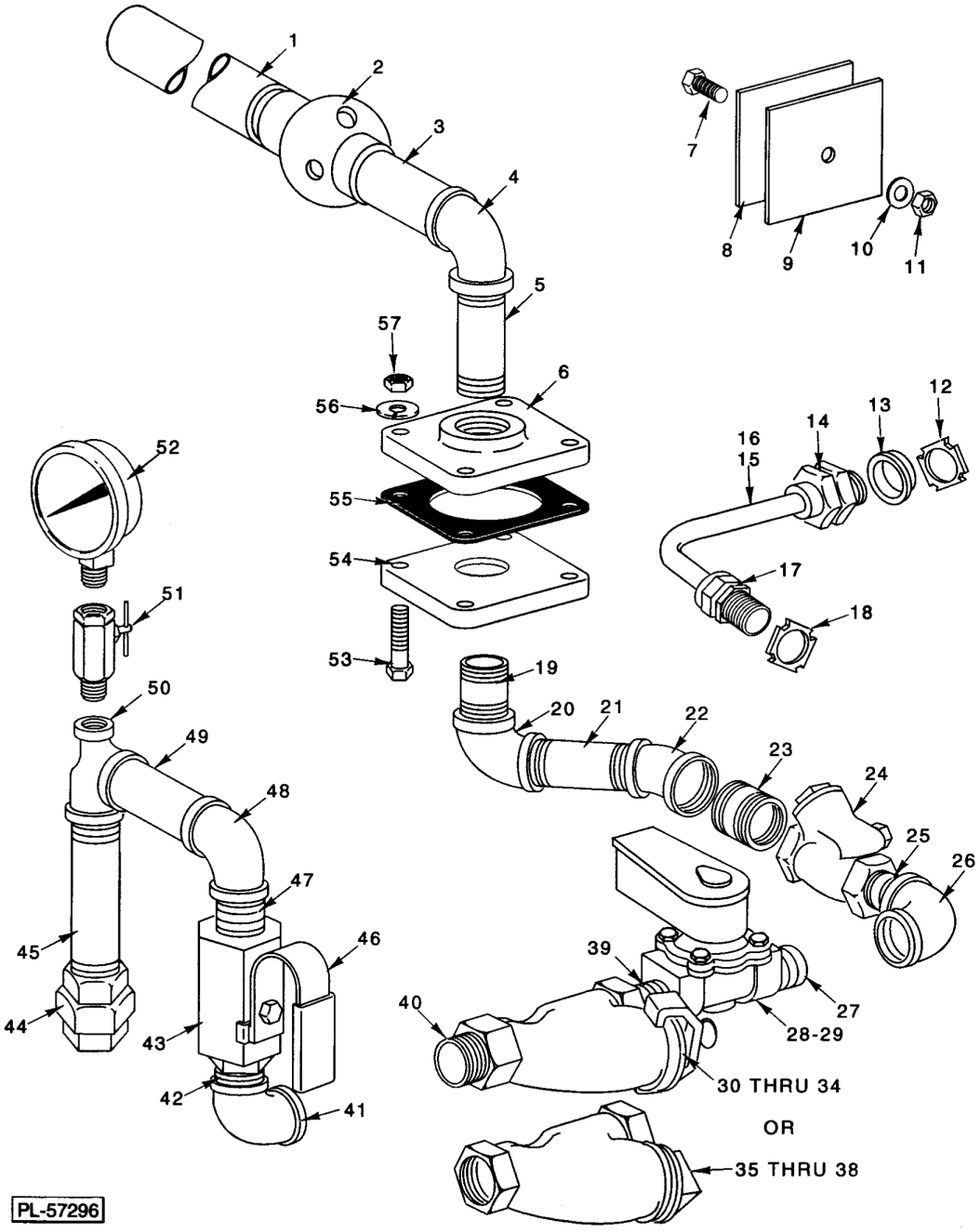

STEAM INJECTOR
(ML-32614, ML-32615, & ML-110025)

STEAM INJECTOR
(ML-32614, ML-32615, & ML-110025)

STEAM INJECTOR
(ML-32614, ML-32615, & ML-110025)

ILLUS. PL-57296	PART NO.	NAME OF PART	AMT.
1	FP-054-35	Pipe 1 x 10 Lg. (STOE)	1
2	00-288671	Heater - Water	1
3	FP-054-44	Pipe 3/4 x 2 1/2 TBE (SST)	1
4	FP-049-15	Elbow 3/4 x 90 (SST)	1
5	FP-054-30	Pipe 3/4 x 3 Lg. TBE	1
6	00-067039-00002	Plate - Adapter	1
7	SC-041-28	Cap Screw 3/8-16 x 3/4 Hex Hd. (SST)	1
8	00-119152	Gasket - Cover Plate	1
9	00-119153	Plate - Cov er	1
10	WL-006-27	Lockwasher 3/8 Helical (SST)	1
11	NS-015-13	Nut 3/8-16 Hex (SST)	1
12	FE-006-05	Lock Nut 1/2	1
13	FE-008-10	1/2 Gasket Assy	1
14	FE-022-84	Connector - Strain Relief	1
15	00-294527	Cable Assy. (RH Controls)	1
16	00-294528	Cable Assy. (LH Controls)	1
17	FE-022-84	Connector - Strain Relief	1
18	FE-006-05	Lock Nut 1/2	1
19	FP-036-92	Pipe 3/4 x 1 3/8 TBE	1
20	FP-013-22	Elbow 3/4 x 90 Deg	1
21	FP-036-05	Pipe 3/4 x 3 TBE	1
22	FP-013-20	Elbow 3/4 x 45 Deg	1
23	FP-036-92	Pipe 3/4 x 1 3/8 TBE	1
24	00-074696	Check Valve (3/4)	1
25	FP-036-92	Pipe 3/4 x 1 3/8 TBE	1
26	FP-013-22	Elbow 3/4 x 90 Deg	1
27	FP-036-92	Pipe 3/4 x 1 3/8 TBE	1
28	00-270329-00003	Solenoid Valve 3/4 (Piston Valve; Gray Cover) (Incls. Item 29)	1
29	00-270318-00003	Coil - Solenoid Valve	1
30	00-186922	Line Strainer 3/4 In. (Incls. Items 31 thru 35)	1
31	00-082231	Screen - 3/4 In. Line Strainer	1
32	00-082234	Plate-Seal (3/4 In. Line Strainer) (Zinc Plated)	1
33	00-082238	Thumb Screw	1
34	00-067500-00009	O-Ring	1
35	00-186922	Strainer - Line 3/4 In. (Brass) (Incls. Items 36, 37, & 38)	1
36	00-186925	Screen - (3/4 In. Line Strainer)	1
37	00-186924	Gasket (3/4 In. Line Strainer)	1
38	00-186923	Plug - Branch (3/4 In. Line Strainer)	1
39	FP-036-92	Pipe 3/4 x 1 3/8 TBE	1
40	FP-036-92	Pipe 3/4 x 1 3/8 TBE	1
41	FP-013-22	Elbow 3/4 x 90 Deg	1
42	FP-036-92	Pipe 3/4 x 1 3/8 TBE	1
43	00-292385	Valve 3/4 Ball	1
44	FP-022-17	Union 3/4 (Grd. Seat)	1
45	FP-036-10	Pipe 3/4 x 4-3/4 TBE	1
46	00-289782-00003	Sleeve - Ball Valve Handle	1
47	FP-036-92	Pipe 3/4 x 1 3/8 TBE	1
48	FP-013-22	Elbow 3/4 x 90 Deg	1
49	FP-036-06	Pipe 3/4 x 3-1/2 TBE	1
50	FP-019-79	Tee 3/4 x 1/4 x 3/4 Reducing	1
51	00-473041	Valve - Ball (1/4 turn)	1
52	00-328247	Gauge - Water Pressure	1
53	SC-041-17	Cap Screw 5/16-18 x 1-1/2 Hex Hd. (SST)	4
54	00-067039-00002	Plate - Adapter	1
55	00-067036	Gasket - Adapter Plate	1
56	WL-006-22	Lockwasher 5/16 Light	4
57	NS-018-06	Jam Nut 5/16-18 Hex (SST)	4
	00-270336	Service Kit - Solenoid Valve (Piston Valve; Gray Cover)	1
	00-083376	Wire Tie	2

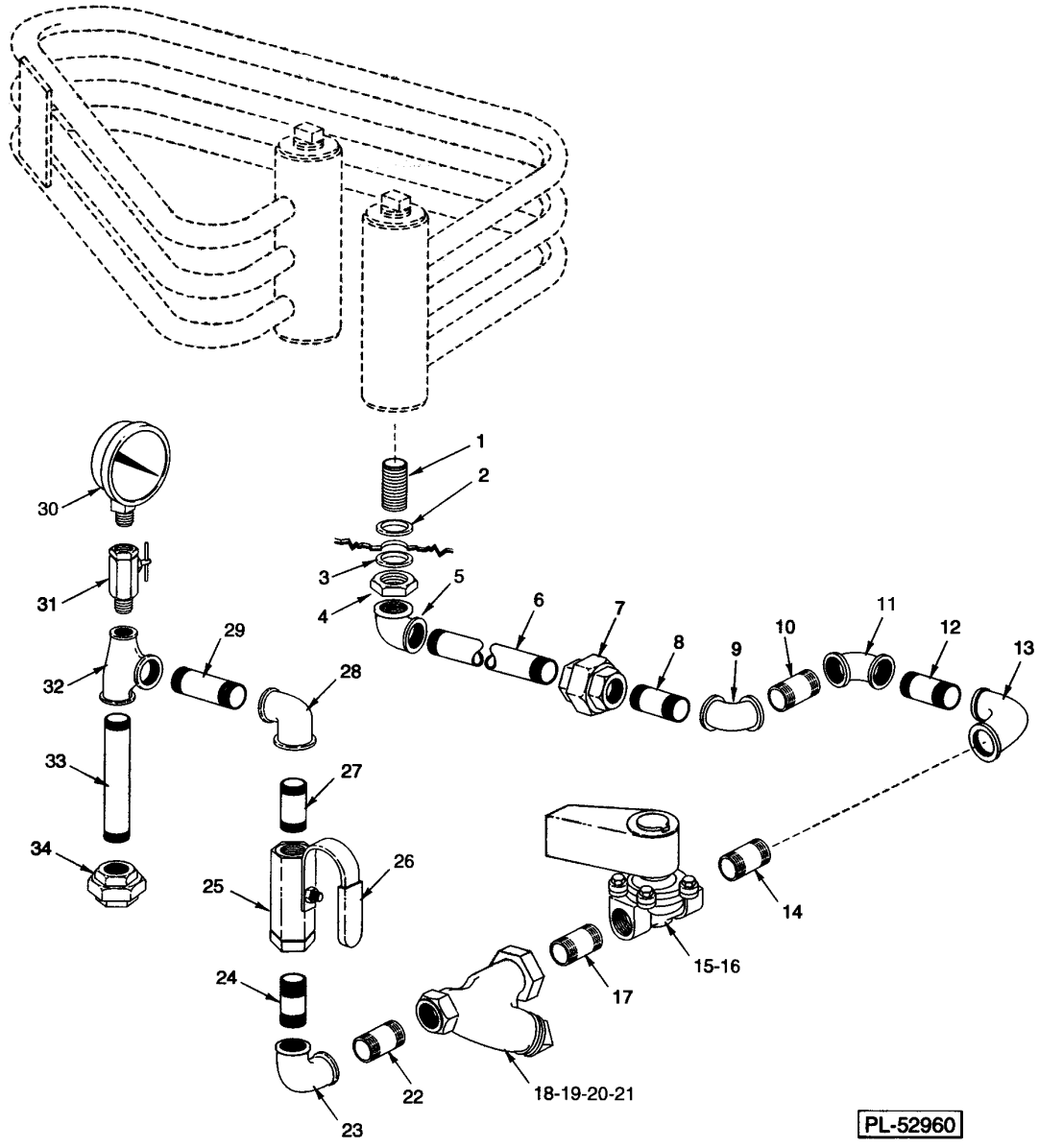

STEAM COIL PIPING
(ML-32614, ML-32615, & ML-110025)

STEAM COIL PIPING
(ML-32614, ML-32615, & ML-110025)

STEAM COIL PIPING
(ML-32614, ML-32615, & ML-110025)

ILLUS. PL-52960	PART NO.	NAME OF PART	AMT.
1	FP-080-17	Pipe 3/4 x 2 TBE (1 1/2 RTOE) (SST)	1
2	WS-013-45	Washer	1
3	WS-013-45	Washer	1
4	FP-053-09	Lock Nut 3/4 NPSL (SST)	1
5	FP-013-22	Elbow 3/4 x 90 Deg	1
6	FP-036-92	Pipe 3/4 x 1 3/8 TBE	1
7	FP-022-17	Union 3/4 (Grd. Seat)	1
8	FP-059-14	Pipe 3/4 x 4 1/2 TBE	1
9	FP-013-20	Elbow 3/4 x 45 Deg	1
10	FP-036-92	Pipe 3/4 x 1 3/8 TBE	1
11	FP-013-20	Elbow 3/4 x 45 Deg	1
12	FP-036-87	Pipe 3/4 x 4-1/4 TBE	1
13	FP-013-22	Elbow 3/4 x 90 Deg	1
14	FP-036-92	Pipe 3/4 x 1 3/8 TBE	1
15	00-270329-00003	Solenoid Valve (Incls. Item 16)	1
16	00-270318-00003	Coil - Solenoid Valve	1
17	FP-036-92	Pipe 3/4 x 1 3/8 TBE	1
18	00-186922	Strainer - Line 3/4 In. Brass (Incls. Items 19, 20, & 21)	1
19	00-186923	Plug - Branch 3/4 In. Line Strainer)	1
20	00-186924	Gasket (3/4 In. Line Strainer)	1
21	00-186925	Screen (3/4 In. Line Strainer)	1
22	FP-036-92	Pipe 3/4 x 1 3/8 TBE	1
23	FP-013-22	Elbow 3/4 x 90 Deg	1
24	FP-036-92	Pipe 3/4 x 1 3/8 TBE	1
25	00-292385	Valve 3/4 Ball	1
26	00-289782-00003	Sleeve - Ball Valve Handle	1
27	FP-036-92	Pipe 3/4 x 1 3/8 TBE	1
28	FP-013-22	Elbow 3/4 x 90 Deg	1
29	FP-036-06	Pipe 3/4 x 3-1/2 TBE	1
30	00-328247	Gauge - Water Pressure	1
31	00-473041	Valve - Ball (1/4 turn)	1
32	FP-019-79	Tee 3/4 x 1/4 x 3/4 Reducing	1
33	FP-036-10	Pipe 3/4 x 4-3/4 TBE	1
34	FP-022-17	Union 3/4 (Grd. Seat)	1
	00-370336	Service Kit - Solenoid Valve (Piston Valve; Gray Cover)	1

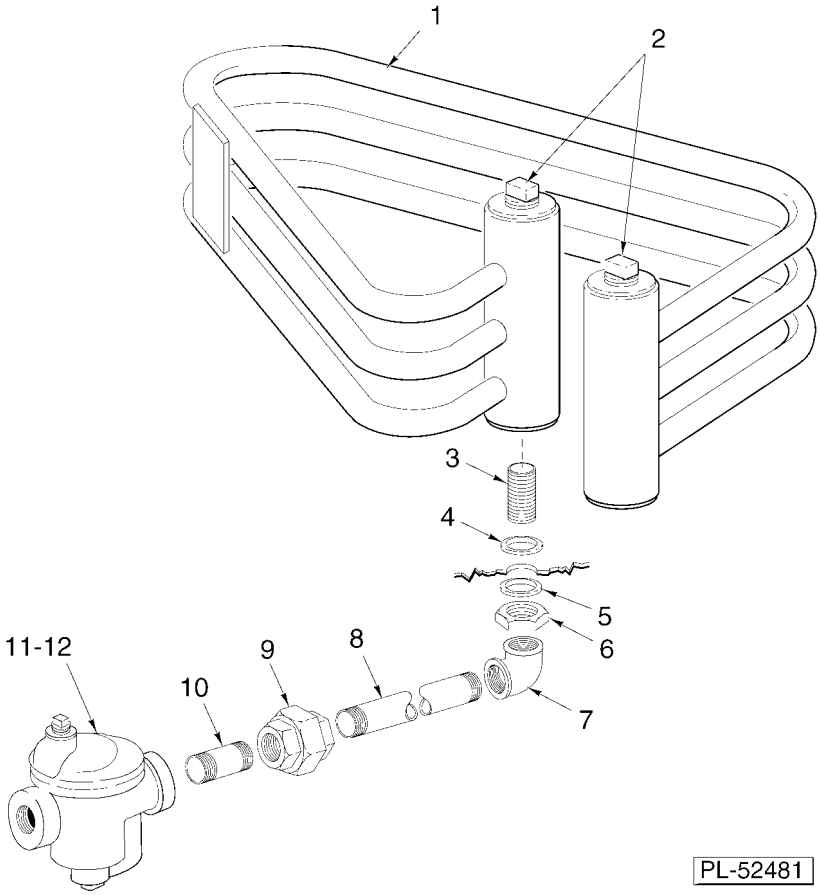

STEAM COILS
(ML-32614, ML-32615, & ML-110025)

STEAM COILS
(ML-32614, ML-32615, & ML-110025)

ILLUS. PL-52481B	PART NO.	NAME OF PART	AMT.
1	00-475013	Coil - Steam	1
2	FP-052-09	Pipe Plug 3/4 Sq. Hd. (SST)	2
3	FP-080-17	Pipe 3/4 x 2 TBE (1 1/2 RTOE) (SST)	1
4	WS-013-45	Washer	1
5	WS-013-45	Washer	1
6	FP-053-09	Lock Nut 3/4 NPSL (SST)	1
7	FP-013-22	Elbow 3/4 x 90 Deg	1
8	FP-059-64	Pipe 3/4 x 5 1/2 TBE	1
9	FP-022-17	Union 3/4 (Grd. Seat)	1
10	FP-036-92	Pipe 3/4 x 1 3/8 TBE	1
11	00-118316	Steam Trap (0-20 PSI)	1
12	00-118317	Steam Trap (21-50 PSI)	1

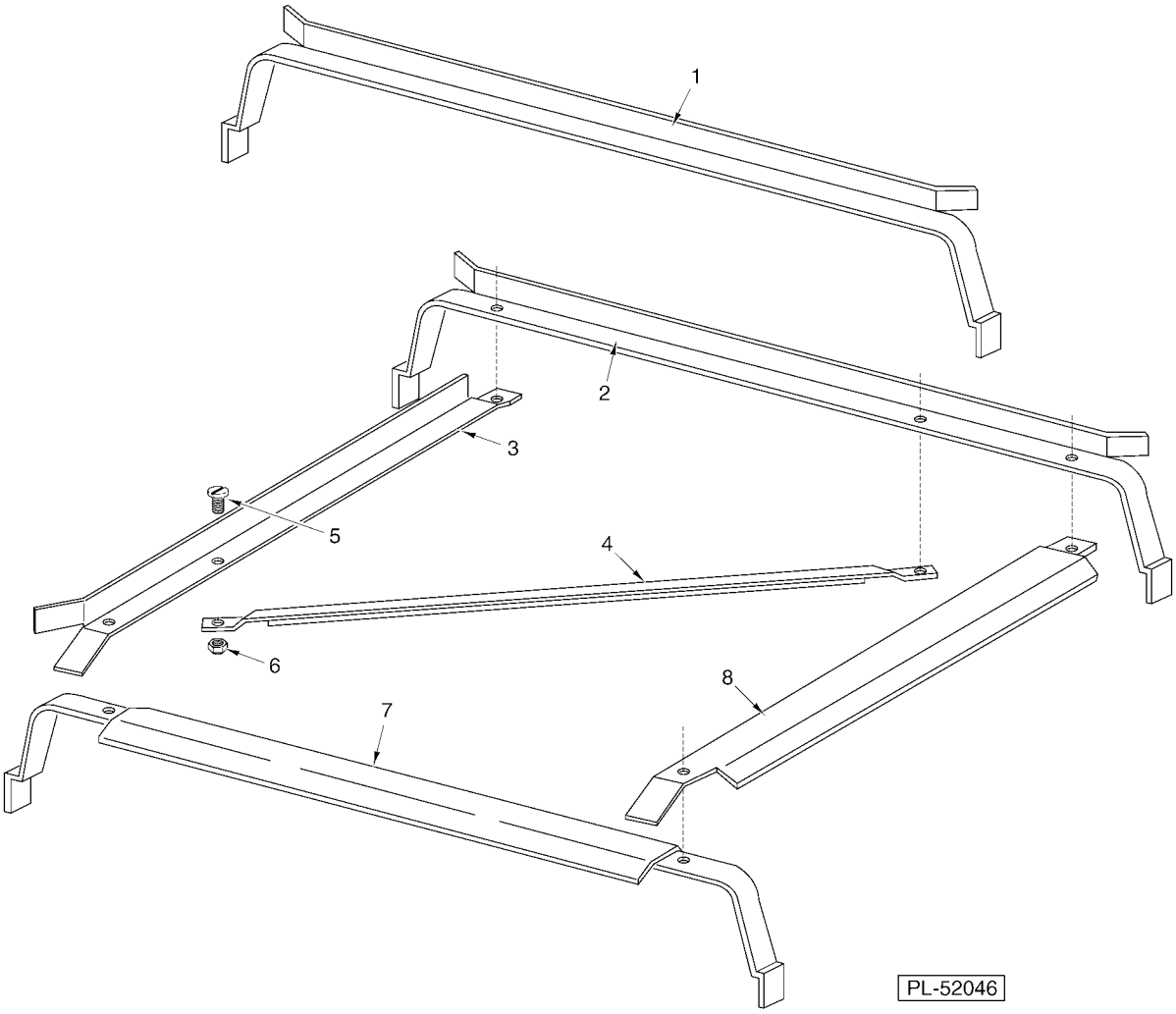

TRACK UNIT

TRACK UNIT

ILLUS. PL-52046	PART NO.	NAME OF PART	AMT.
1	00-119084	Track - Rack (Straight Thru Installation)	2
2	00-119080	Track - Rear Rack (Corner Installation)	1
3	00-074527	Track - LH Rack (Corner Installation)	1
4	00-119129	Support - Track (Corner Installation)	1
5	SC-022-27	Mach. Screw 12-24 x 5/8 Slotted Flat Hd. (SST)	6
6	NS-036-05	Stop Nut 12-24 Elastic (Corner Installation)	6
7	00-119093-00001	Track - Front Rack (Corner Installation)	1
8	00-074528	Track - RH Rack (Corner Installation)	1

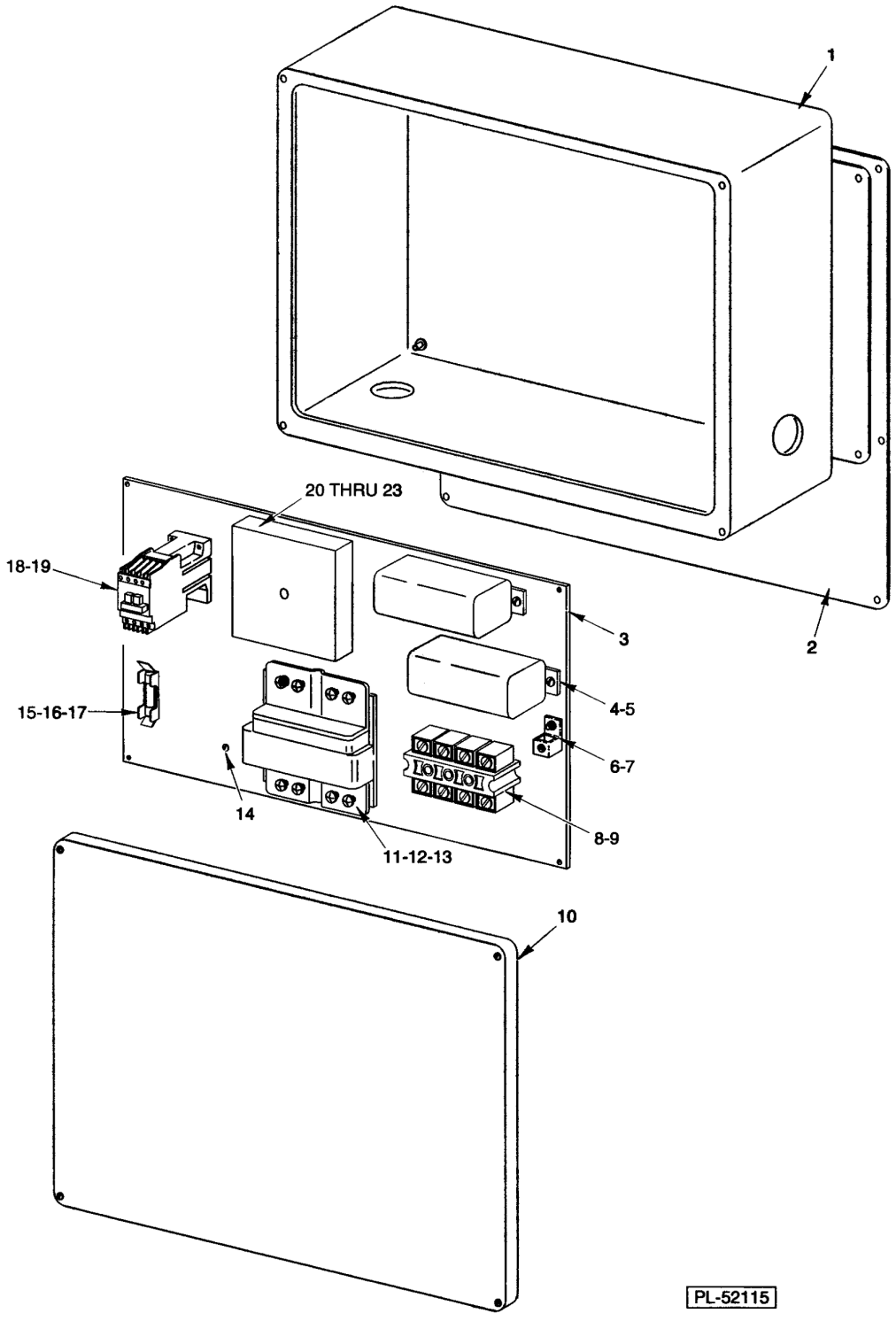

VENT FAN CONTROL
(PREVIOUS CONSTRUCTION)

VENT FAN CONTROL
(PREVIOUS CONSTRUCTION)

VENT FAN CONTROL
(PREVIOUS CONSTRUCTION)

ILLUS. PL-52115	PART NO.	NAME OF PART	AMT.
1	00-473429	Box - Electrical (Incls. Lid)	1
2	00-473437	Bracket - Control Panel	1
3	00-473427	Plate - Base	1
4	00-087714-007-1	Relay 24 VAC (DPDT) (Steam/Electric Heat)	1
5	SD-008-18	Self-Tapping Screw 8-18 x 3/8 Phil. Bndg. Hd., Type B	1
6	00-118544-00001	Lug - Solderless	1
7	SD-008-25	Self-Tapping Screw 10-16 x 1/2 Phil. Pan Hd., Type B	1
8	00-294325-013-4	Block - Terminal (Under 250 V.)	1
9	SD-019-29	Self-Tapping Screw 6-20 x 1/2 Phil. Pan Hd., Type B	1
10	SC-041-05	Cap Screw 1/4-20 x 5/8 Hex Hd	1
11	00-294500-00028	Transformer (50 VA.) (3 Ph.) (W/Electric Booster; Hi-Volt)	1
12	SD-008-25	Self-Tapping Screw 10-16 x 1/2 Phil. Pan Hd., Type B	1
13	WL-007-12	Lockwasher 10 External Shakeproof	1
14	SD-008-18	Self-Tapping Screw 8-18 x 3/8 Phil. Bndg. Hd., Type B	1
15	00-294436-00003	Block - Fuse	1
16	FE-022-28	Fuse (250 V., 0.5 Amp.)	1
17	SD-008-17	Self-Tapping Screw 6-20 x 3/8 Phil. Bndg. Hd., Type B	1
18	00-087713-086-1	Contactor - Single Pole	1
19	SD-008-25	Self-Tapping Screw 10-16 x 1/2 Phil. Pan Hd., Type B	1
20	00-087714-00036	Relay Time Delay (Variable)	1
21	SD-036-13	Self-Tapping Screw 1/4-20 x 1 1/4 Hex Washer Hd., Type T	1
22	WL-007-15	Lockwasher 1/2 External Shakeproof	1
23	00-437070-00001	Plug-On Module	1

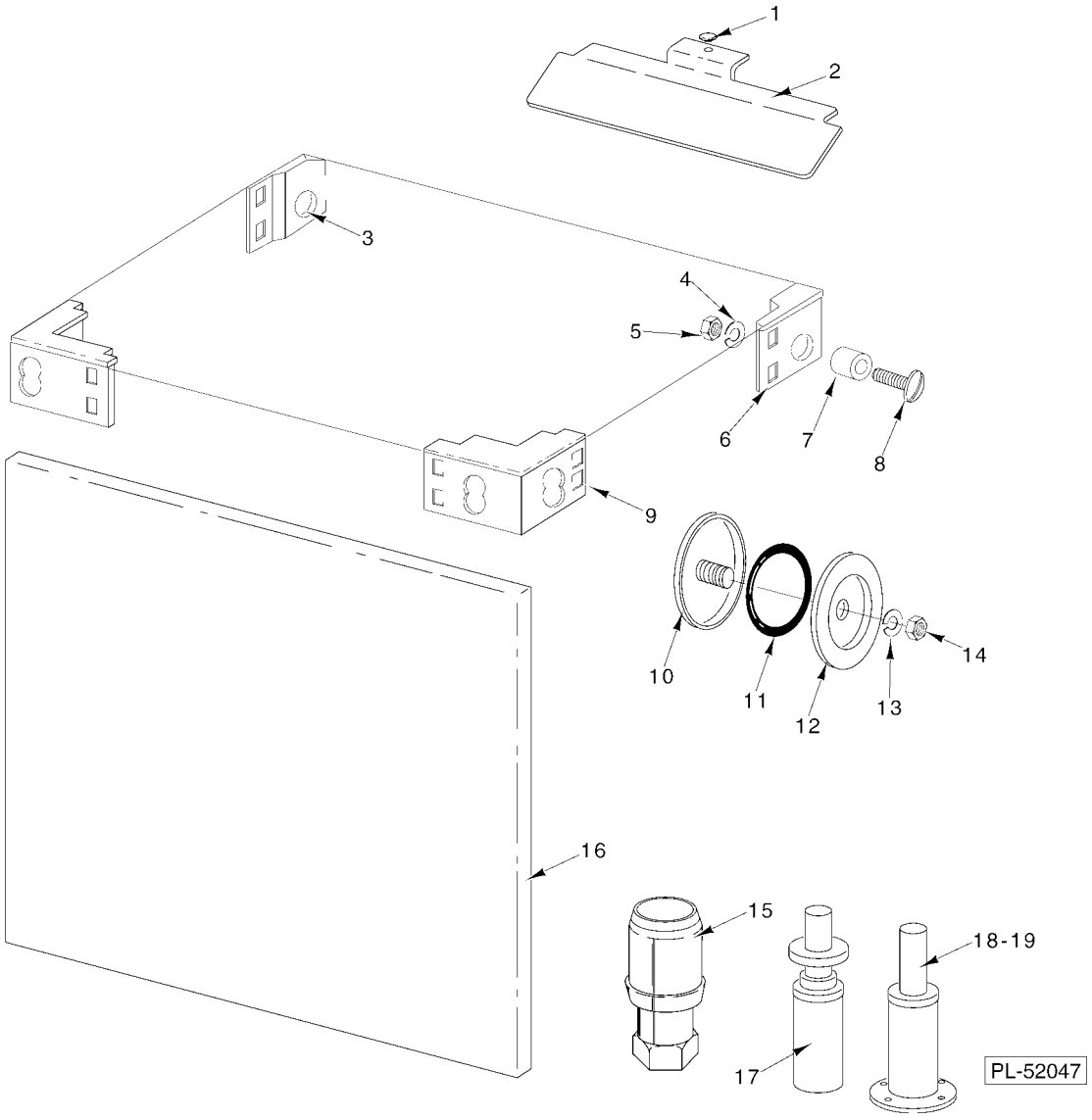

MISCELLANEOUS

MISCELLANEOUS

ILLUS. PL-52047	PART NO.	NAME OF PART	AMT.
1	00-288174	Bumper - Button	4
2	00-288059	Baffle - Vent	4
3	00-119082	Insert - Tank Corner (Left Rear)	1
4	NS-015-11	Nut 5/16-18 Hex (SST)	11
5	WL-006-22	Lockwasher 5/16 Light	11
6	00-119083	Insert - Tank Corner (Right Rear)	1
7	00-119047	Spacer - Tank & Chamber	6
8	SC-041-13	Cap Screw 5/16-18 x 1 Hex Hd. (SST)	6
9	00-119081	Insert - Tank Corner (Front)	2
10	00-119244	Cap & Stud Assy	3
11	00-067500-00031	O-Ring	3
12	00-119254	Retainer - Cap & Stud	3
13	WL-006-17	Lockwasher 1/4 Helical (SST)	3
14	NS-015-01	Nut 1/4-20 Hex (SST)	3
15	00-288946-00002	Foot - Adjustable (1-5/8) (SST)	4
16	00-329208	Panel - Front	1
17	00-112605-027-2	Plug - Foot	4
18	00-329688	Foot - Flanged	4
19	SW-008-17	Lag Screw 3/8-7 x 2 Sq. Hd	4

3	00-295288	Peg Type Tray Rack (Packaged)
4	00-892671	Rack - Bun Pan
5	00-474800	Rack (6 Pan)

PARTS NOT ILLUSTRATED

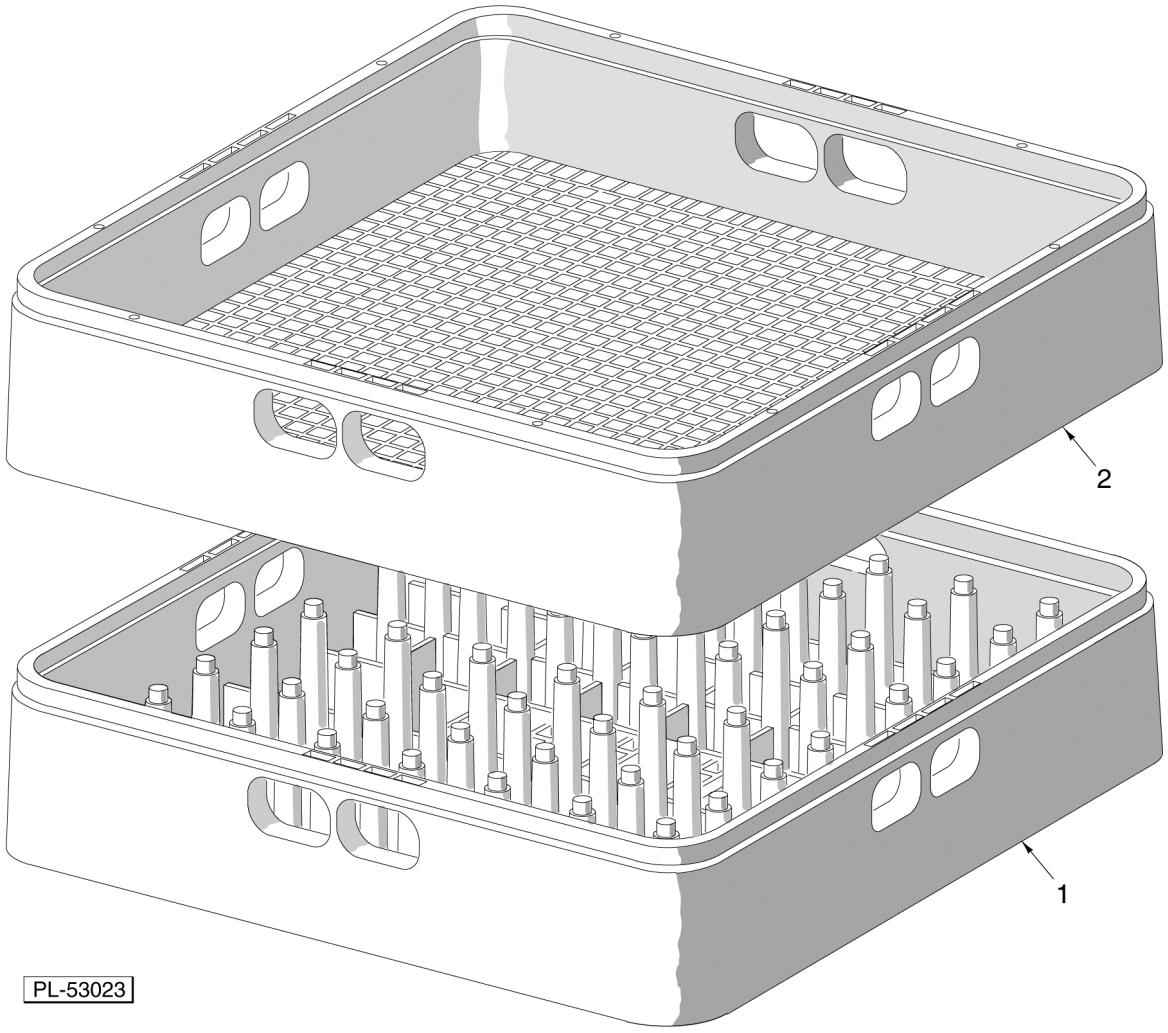

DISH RACKS

DISH RACKS

ILLUS. PL-53023	PART NO.	NAME OF PART	AMT.
1	00-315191	Rack - Peg (Packaged)	1
2	00-315193	Rack - Combination (Packaged)	1
	00-295288	Peg Type Tray Rack (Packaged)	1
	00-892671	Rack - Bun Pan	1