HOBART
SERVICE

CATALOG OF REPLACEMENT PARTS



AM15 SERIES DISHWASHERS

ML-130038
ML-130039
ML-130045
ML-130153
ML-130154
ML-130155
ML-130326
ML-130327
ML-130354
ML-130370

A Product of Hobart Service
701 S. Ridge Ave Troy, OH 45374

FORM F43094 Rev. Z (April 2026)

 © HOBART SERVICE 2026

Table of Contents

4 CONTROLS
6 CONTROL CABLES
8 CONTROL BOX (ELECTRIC HEAT)
10 CONTROL BOX (GAS HEAT) (AM15, AM15T, & AM15F)
12 MOTOR AND PUMP (BEFORE S/N 231131226)
14 MOTOR AND PUMP (STARTING S/N 231131226)
16 UPPER WASH ARM
18 LOWER WASH ARM
20 RINSE PIPING (WITHOUT BOOSTER AND WITHOUT STEAM CONDENSER)
22 RINSE PIPING (WITH BOOSTER AND WITHOUT STEAM CONDENSER)
24 VENTLESS OUTSIDE PIPING (BEFORE S/N 231197040)
26 VENTLESS OUTSIDE PIPING (STARTING S/N 231197040)
28 VENTLESS COMPONENTS (AM15SCBVL)
30 BOOSTER PIPING (AM15, AM15T, AM15F, & AM15SCB)
32 RINSE PUMP ASSEMBLY (AM15VL, AM15VLT, & AM15VLF)
34 ELECTRIC BOOSTER TANK
36 STEAM CONDENSER
38 LOW WATER PROTECTION AND ELECTRIC HEAT
40 DRAIN UNIT (EXCEPT AM15SVLT UNITS STARTING S/N 231197040)
42 DRAIN PUMP AND DWER (AM15SCB OPTION)
44 DRAIN WATER TEMPERING
46 DOOR ASSEMBLY (AM15, AM15VL, AM15SCB, & AM15SVL)
48 DOOR ASSEMBLY (AM15T, AM15F, AM15VLT, AM15VLF, & AM15SVLT)
50 DOOR LOCK (AM15VL, AM15VLT, AM15SVL, AM15SVLT, & AM15SCBVL)
52 DOOR LOCK - ELECTRICAL
54 PANELS AND RACK SUPPORT
56 GAS HEAT PIPING
58 GAS HEAT COMPONENTS
60 FRONT TRAY
62 CHEMICAL PUMP (AM15SCB)
64 CHEMICAL PUMP (AM15SVLT) (STARTING S/N 231210936)
66 CHEMICAL PUMP (AM15SVLT) (UMP200 DIGITAL PLUS)
68 CHEMICAL PUMP (AM15SCB) (UMP300 DIGITAL PLUS)
70 DISH RACKS AND ACCESSORIES

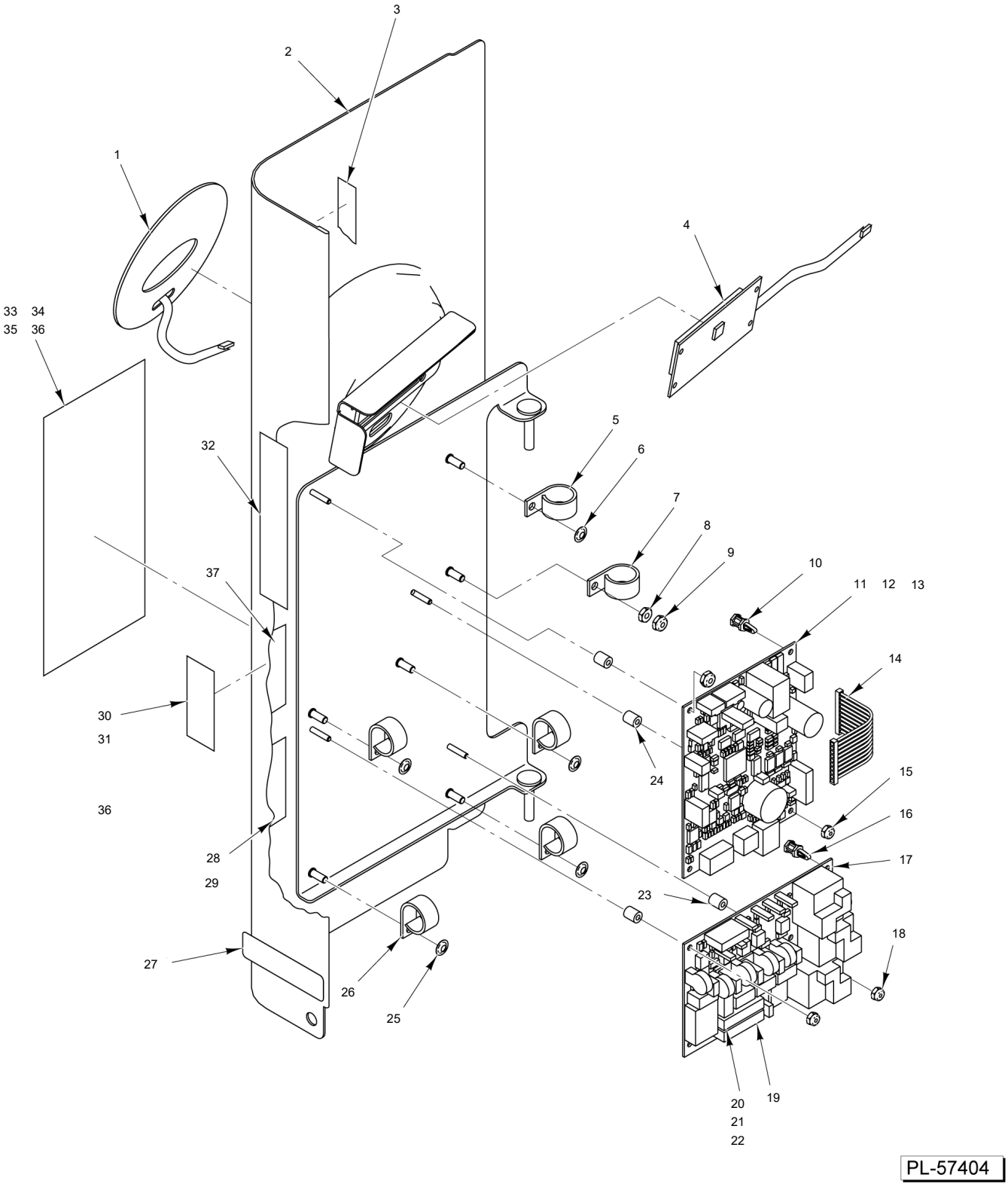
1
2
3
4
5
6
7
8
9
10
11 12 13
14
15
16
17
18
19
20
21
22
23
24
25
26
27
28
29
30
31
32
33 34
35 36
36
37
PL-57404

CONTROLS

CONTROLS

ILLUS.	PART NO.	NAME OF PART	AMT.
PL-6024			
1	00-893113	Switch - Membrane Keypad	1
2	00-893040	Bezel - Display Weldment	1
3	00-526454-00002	Foam Tape	0
4	00-892458	Display Module	1
5	00-294677-00003	Clamp - Wire (3/4 I.D.)	1
6	NS-047-94	Lock Nut 3/16 Washer Type (SST)	1
7	00-294677-00003	Clamp - Wire (3/4 I.D.)	1
8	NS-011-18	Nut 10-24 Hex (SST)	1
9	NS-031-16	Stop Nut 10-24 Hex Elastic (SST)	1
10	00-892720-00002	Standoff	2
11	00-892932-00002	Control Board Assy. (AM15, AM15T, AM15VL, & AM15VLT)	1
12	00-974590	Control Board Assy. (SVL and SVLT, Without Drain Pump, Dwer)	1
13	00-562209	Control Board Assy. (AM15SVLT, AM15VL, AM15VLT With Drain Pump, Dwer and AM15SCB, ALL With and Without Drain Pump)	1
14	00-892793-00002	Ribbon Cable Assy.	1
15	NS-031-50	Stop Nut 6-32 Hex (SST)	2
16	00-892720-00002	Standoff	2
17	00-892934-00001	Board - Relay Assy.	1
18	NS-031-50	Stop Nut 6-32 Hex (SST)	2
19	FE-022-29	Fuse (250 V., 1.0 Amp.)	1
20	FE-026-30	Fuse (250 V., 0.1 Amp.) (AM15, AM15T, & AM15F)	1
21	FE-019-11	Fuse (250 V., 0.3 Amp.) (AM15VL, AM15VLT, & AM15VLF)	1
22	FE-021-19	Fuse (250 V., 3.2 Amp.) F2 (Gas Only)	1
23	00-118349-00007	Standoff - Reed Board (Relay Board)	2
24	00-118349-00007	Standoff - Reed Board (Control Board)	2
25	NS-047-94	Lock Nut 3/16 Washer Type (SST)	4
26	00-294677-00003	Clamp - Wire (3/4 I.D.)	4
27	00-893642	Plate (Patent Numbers)	1
28	0F-035324	Label - Warning (Fuse) (Electric Heat)	1
29	0F-035373	Label - Warning (Fuse) (Gas Heat)	1
30	00-438131-00060	Label - Warning (With Electric Booster)	1
31	00-438131-00185	Label - Warning (With Gas Heat, With Electric Booster S.P.E.C., or Without Electric Booster)	1
32	0F-035331	Label (Error Code)	1
33	00-438131-00175	Label - Instruction (AM15 & AM15T)	1
34	00-941234	Label - Instruction (Ventless) (AM15VL, AM15VLT, & AM15VLF)	1
35	0F-038359	Label - Warning (Fuse) (AM15)	1
36	00-562220	Label - Instructions (AM15SVL & AM15SVLT)	1
37	00-438131-00224	Label - Instructions (AM15SCB, With and Without Drain Pump) (Cleaning and Delime Instructions)	1

Item Number	Description
1	Ribbon Cable Assy.
2	Harness - Sensor Assy. (AM15, AM15T, & AM15F)
3	Harness - Relay Board Assy. (AM15, AM15T, & AM15F)
4	Cable - Rinse Thermistor/Door Switch (AM15, AM15T, & AM15F)
5	Cable - Rinse Valve (W/O Electric Booster) (Incls. DIN Connector) (AM15, AM15T, & AM15F) (Before S/N 231154994)
6	Cable - Rinse Valve (W/Electric Booster) (Incls. DIN Connector) (AM15, AM15T, & AM15F) (Before S/N 231154994)
7	Cable Assy. - Rinse Thermistor (AM15VL, AM15VLT, & AM15VLF)
8	Cable Assy. - Fan/Cold Water Valve (AM15VL, AM15VLT, & AM15VLF)
9	Cable Assy. - Hot Water Valve (AM15VL, AM15VLT, & AM15VLF) (Before S/N 231154994)
10	Cable Assy. - Cold Water Valve (AM15VL, AM15VLT, & AM15VLF) (Before S/N 231154994)
11	Cable Assy. - Cold Water Valve (AM15VL, AM15VLT, & AM15VLF) (Starting S/N 235114994)
12	Cable Assy. - Light (AM15VL, AM15VLT, & AM15VLF).
13	Harness - High Voltage (AM15VL, AM15VLT, & AM15VLF)
14	Harness - Low Voltage (Sensors & Door Switch) (AM15VL, AM15VLT, & AM15VLF)
15	Cable - Rinse Valve (W/O Electric Booster) (Incls. DIN Connector) (AM15, AM15T, & AM15F) (Starting S/N 231154994)
16	Cable - Rinse Valve (W/Electric Booster) (Incls. DIN Connector) (AM15, AM15T, & AM15F) (Starting S/N 231154994)
17	Cable Assy. - Hot Water Valve (Incls. DIN Connector) (AM15VL, AM15VLT, & AM15VLF) (Starting S/N 231154994)
18	Cable Assy. - Detrol Rinse Valve Ventless (AM15S) (Starting S/N 231197040) (AM15VL) (Starting S/N 231203542)
19	Conduit - Harness - Harness - Chemical Dispenser (AM15SCB)
20	Harness - Chemical Dispenser (AM15SCB)
21	Harness - Transformer Power (AM15SCB)
22	Harness - Chemical Sense (AM15SCB)
23	Harness - Chemical Sense (AM15SVL)
24	Harness - Control to sPOD Power (AM15SCB)
25	Harness - Control Cable to sPOD Control (AM15SCB)
26	Harness and Conduit Assy. - Chemical Dispense (AM15SVLT)
27	Harness - Chemical Dispense (AM15SVLT)
28	Harness - Jumper (AM15SVLT With Drain Pump)
29	Harness - Jumper (AM15SVLT)
30	Resister - Booster Assy. (AM15SCB)
31	Harness - Drain Motor (AM15SVLT)
32	Harness - 3CR Relay (AM15SCB)
33	Harness - Chemical Dispense (AM15SCB)
34	Harness - Chemical Dispense (AM15SVLT)
35	Harness - Chemical Dispense (AM15SVLT)
36	Harness and Conduit Assy. (AM15SVLT) (Starting S/N 231212983)
37	Cable Assy. (Chem. Pump to Probe) (S/N 231208914 Thru S/N 231210983)

PL-60462

CONTROL CABLES

CONTROL CABLES

ILLUS.	PART NO.	NAME OF PART	AMT.
PL-24260			
1	00-892793-00002	Ribbon Cable Assy. (Control Board to Relay Board)	1
2	00-893447	Harness - Sensor Assy. (AM15, AM15T, & AM15F) (Low Voltage Wash/Rinse Booster to Control Board)	1
3	00-893448	Harness - Relay Board Assy. (AM15, AM15T, & AM15F) (High Voltage Relay Board)	1
4	00-893125	Cable - Rinse Thermistor/Door Switch (AM15, AM15T, & AM15F)	1
5	00-893126-00001	Cable - Rinse Valve (Parker) (W/O Electric Booster) (Incls. DIN Connector) (AM15, AM15T, & AM15F) (Before S/N 231154994)	1
6	00-893126-00002	Cable - Rinse Valve (Parker) (W/Electric Booster) (Incls. DIN Connector) (AM15, AM15T, & AM15F) (Before S/N 231154994)	1
7	00-941222	Cable Assy. - Rinse Thermistor (AM15VL, AM15VLT, & AM15VLF)	1
8	00-941170	Cable Assy. - Fan/Cold Water Valve (AM15VL, AM15VLT, & AM15VLF)	1
9	00-893126-00003	Cable Assy. - Hot Water Valve (AM15VL, AM15VLT, & AM15VLF) (Before S/N 231154994)	1
10	00-941173	Cable Assy. - Cold Water Valve (AM15VL, AM15VLT, & AM15VLF) (Before S/N 231154994)	1
11	00-949340	Cable Assy. - Cold Water Valve (AM15VL, AM15VLT, & AM15VLF) (Starting S/N 231154994)	1
12	00-941174	Cable Assy. - Light (AM15VL, AM15VLT, & AM15VLF) (Cycle Light)	1
13	00-941185	Harness - High Voltage (AM15VL, AM15VLT, & AM15VLF)	1
14	00-941186	Harness - Low Voltage (Sensors & Door Switch) (AM15VL, AM15VLT, & AM15VLF)	1
15	00-949337-00001	Cable - Rinse Valve (Asco) (W/O Electric Booster) (Incls. DIN Connector) (AM15, AM15T, & AM15F) (Starting S/N 231154994)	1
16	00-949337-00002	Cable - Rinse Valve (Asco) (W/Electric Booster) (Incls. DIN Connector) (AM15, AM15T, & AM15F) (Starting S/N 231154994)	1
17	00-949337-00003	Cable Assy. - Hot Water Valve (Asco) (Incls. DIN Connector) (AM15VL, AM15VLT, & AM15VLF) (Starting S/N 231154994)	1
18	00-975254	Cable Assy. - Detrol Rinse Valve (AM15S Starting S/N 231197040) (AM15VL Starting S/N 231203542)	1
19	00-975324-00001	Harness - Chemical Dispenser (AM15SCB)	1
20	00-975324-00002	Harness - Transformer Power (AM15SCB)	1
21	00-975324-003-1	Harness - Chemical Sense (AM15SCB)	1
22	00-975324-003-2	Harness - Chemical Sense (Chemical Sense to Control Board) (AM15SVL)	1
23	00-975324-00004	Harness - Control to sPOD Power (AM15SCB)	1
24	00-975324-00005	Harness - Control Cable to sPOD Control (AM15SCB)	1
25	00-975324-007-2	Harness - Chemical Dispense (Conductive Probe) (AM15SVLT)	1
26	00-975324-007-1	Harness and Conduit Assy. - Chemical Dispense (Inductive Probe) (AM15SVLT)	1
27	00-975324-00008	Harness - Jumper (AM15SVLT)	1
28	00-975324-00009	Harness - Jumper (AM15SVLT & AM15SCB With Drain Pump) (AM15SVLT With Drain Pump)	1
29	00-562284	Kit - Power Cord (AM15SVLT)	1
30	00-975324-00006	Resistor Assy. (AM15SCB)	1
31	00-975324-00010	Harness - Drain Motor (AM15SVLT)	1
32	00-975324-00011	Harness - 3CR Relay (AM15SCB)	1
33	00-975324-002-2	Harness - Chemical Dispenser (AM15SCB)	1
34	00-975324-007-3	Harness - Chemical Dispenser (AM15SVLT)	1
35	00-975324-007-4	Harness - Chemical Dispenser (Conductive Probe) (AM15SVLT)	1
36	00-975324-007-5	Harness and Conduit Assy. (Conductive Probe) (AM15SVLT) (Starting S/N 231212983)	1
37	00-562627	Cable Assy. (Chem. Pump to Probe) (S/N 231208914 Thru S/N 231210983)	1

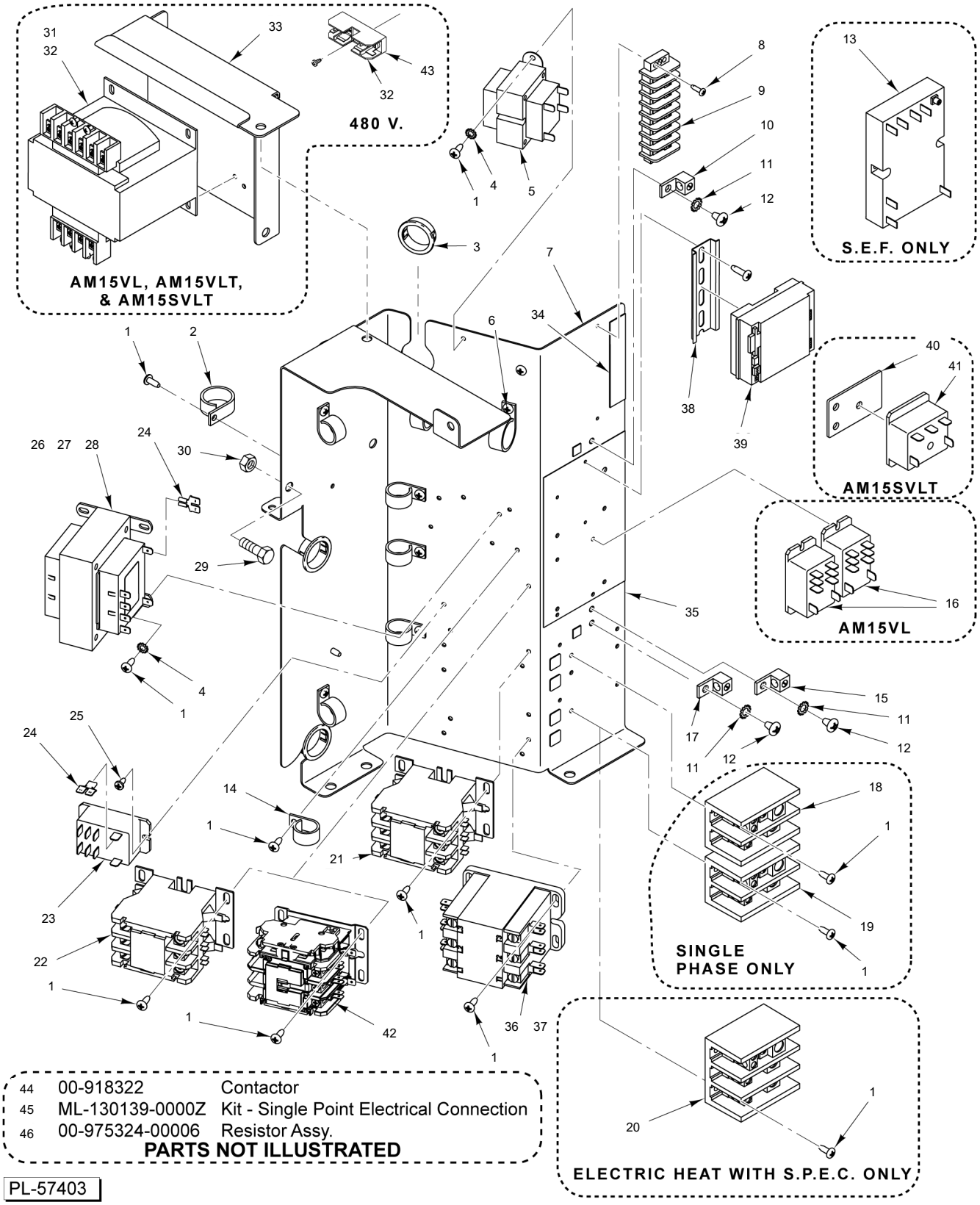

44	00-918322	Contactor
45	ML-130139-0000Z	Kit - Single Point Electrical Connection
46	00-975324-00006	Resistor Assy.

PARTS NOT ILLUSTRATED

PL-57403

CONTROL BOX
(ELECTRIC HEAT)

CONTROL BOX
(ELECTRIC HEAT)

ILLUS.	PART NO.	NAME OF PART	AMT.
PL-6023			
1	SD-008-25	Self-Tapping Screw 10-16 x 1/2 Phil. Pan Hd., Type B	0
2	00-294677-00004	Clamp - Wire (1 I.D.)	3
3	FE-026-29	Bushing - Electrical Snap	3
4	WL-014-07	Lockwasher #10 External Shakeproof (SST)	6
5	00-294500-00051	Transformer (T2) (30 VA., 50/60 Hz.)	1
6	00-294677-00004	Clamp - Wire (1 I.D.)	2
7	00-893651	Box - Control	1
8	SD-019-29	Self-Tapping Screw 6-20 x 1/2 Phil. Pan Hd., Type B	2
9	00-893065	Block - Terminal (Double Row)	1
10	00-118544-00002	Lug - Grounding	1
11	WL-007-15	Lockwasher 1/4 External Shakeproof	3
12	SD-035-77	Self-Tapping Screw 1/4-20 x 3/8 Phil. Pan Hd., Type TT	3
13	00-814247	Microcontroller - Final Rinse Alarm (S.E.F. Only)	1
14	00-294677-00003	Clamp - Wire (3/4 I.D.)	6
15	00-118544-00002	Lug - Grounding (Electric Booster)	1
16	00-087714-046-1	Relay (2-Pole) (30 Amp.) (AM15VL)	2
17	00-118544-00002	Lug - Grounding	1
18	00-949047-00002	Block - Terminal (175 Amp.)	1
19	00-294325-00022	Block - Terminal (Electric Booster) (1 Ph.)	1
20	00-949047	Block - Terminal (175 Amp.) (Electric Heat With S.P.E.C.)	1
21	00-087713-108-1	Contactor (25 Amp., 3-Pole)	1
22	00-087713-108-1	Contactor (25 Amp., 3-Pole)	1
23	00-087714-046-1	Relay (2-Pole) (30 Amp.)	1
24	FE-026-26	Adapter - Electrical	2
25	SD-008-18	Self-Tapping Screw 8-18 x 3/8 Phil. Bndg. Hd., Type B	2
26	00-294500-052-1	Transformer (T1) (208/240/480 V., 50/60 Hz.)	1
27	00-294500-046-1	Transformer (T1) (Used With AM15VL Door Lock Assembly)	1
28	00-294500-052-2	Transformer (T1) (380/415 V., 50/60 Hz.)	1
29	SC-041-14	Cap Screw 5/16-18 x 1-1/8 Hex Hd. (SST)	4
30	NS-036-19	Stop Nut 5/16-18 Hex Special (SST)	4
31	00-294500-00053	Transformer (480 V.) (AM15VL)	1
32	FE-023-25	Fuse (250 V., 5 Amp.)	2
33	00-941201	Bracket - High Voltage Transformer	1
34	0F-035319	Label - Terminal Block	1
35	0F-044182	Label - Electric Ampacity	1
36	00-918322	Contactor (40 Amp., 3-Pole) (120 V.) (Electric Booster With S.P.E.C.)	1
37	00-087713-018-2	Contactor (W/Aux. Switch) (40 Amp., 3-Pole) (AM15SCB W/ Booster)	1
38	00-949145	Din Rail	1
39	00-975355	sPOD (AM15SCB)	1
40	00-562203	Bracket - Relay (AM15SVLT)	1
41	00-562208-00001	Relay - Time Delay (AM15SVLT)	1
42	00-949709-00002	Contactor (25 Amp., 3-Pole) (AM15SVLT)	1
43	00-294436-00003	Block - Fuse Block - Fuse (480 V. Units)	1
44	00-918322	Contactor (40 Amp., 3-Pole)	1
45	ML-130139-0000Z	Kit - Single Point Electrical Connection (3 Ph.)	1
46	00-975324-00006	Resistor Assy. (AM15SCB W/O Booster)	1

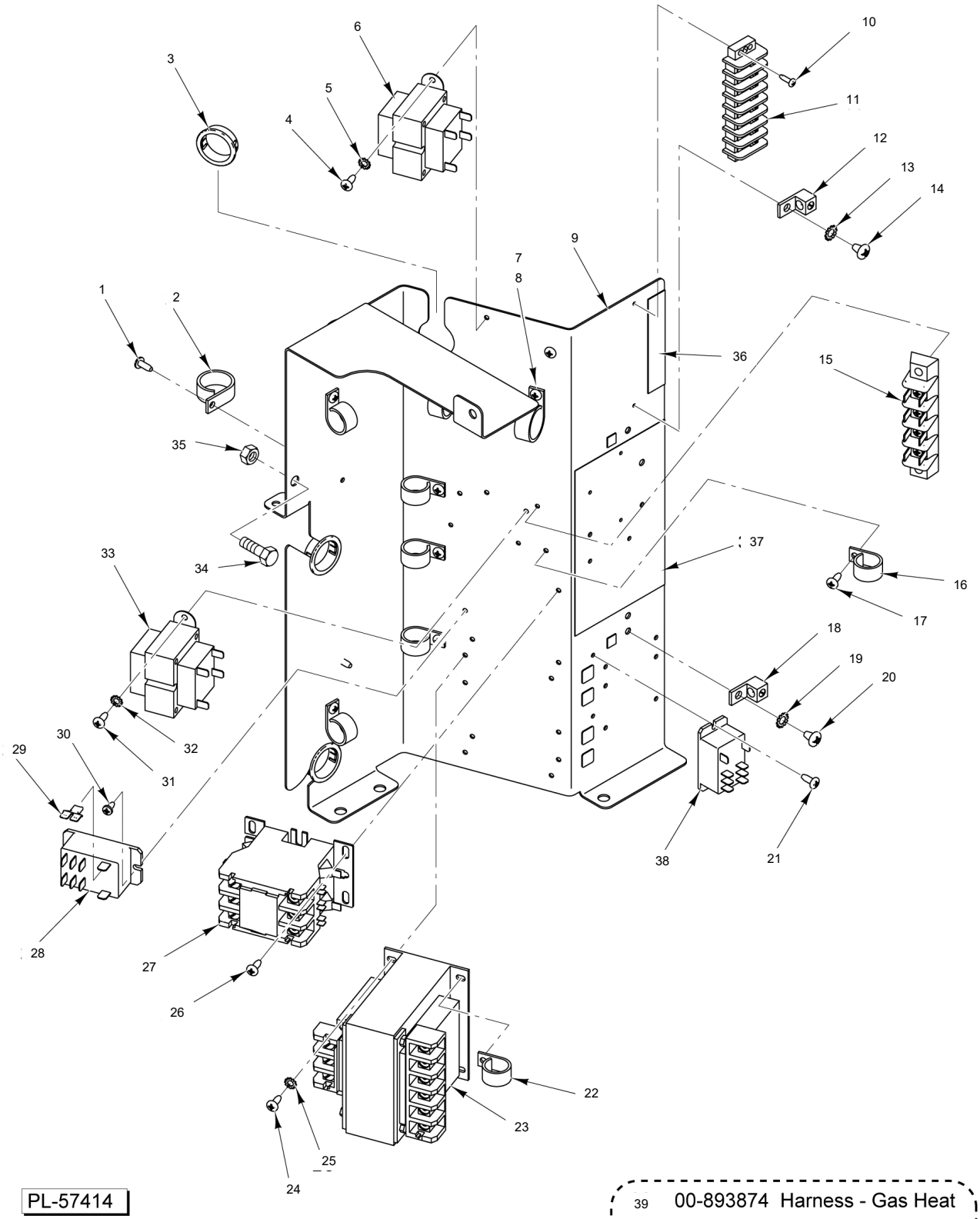

CONTROL BOX
(GAS HEAT)
(AM15, AM15T, & AM15F)

CONTROL BOX
(GAS HEAT)
(AM15, AM15T, & AM15F)

ILLUS.	PART NO.	NAME OF PART	AMT.
PL-6034			
1	SD-008-25	Self-Tapping Screw 10-16 x 1/2 Phil. Pan Hd., Type B	3
2	00-294677-00004	Clamp - Wire (1 I.D.)	3
3	FE-026-29	Bushing - Electrical Snap	3
4	SD-008-25	Self-Tapping Screw 10-16 x 1/2 Phil. Pan Hd., Type B	2
5	WL-014-07	Lockwasher #10 External Shakeproof (SST)	2
6	00-294500-00051	Transformer (T2) (30 VA., 50/60 Hz.)	1
7	SD-008-25	Self-Tapping Screw 10-16 x 1/2 Phil. Pan Hd., Type B	2
8	00-294677-00004	Clamp - Wire (1 I.D.)	2
9	00-893651	Box - Control	1
10	SD-019-29	Self-Tapping Screw 6-20 x 1/2 Phil. Pan Hd., Type B	2
11	00-893065	Block - Terminal (Double Row)	1
12	00-118544-00002	Lug - Grounding	1
13	WL-007-15	Lockwasher 1/4 External Shakeproof	1
14	SD-035-77	Self-Tapping Screw 1/4-20 x 3/8 Phil. Pan Hd., Type TT	1
15	00-294325-00023	Block - Terminal (Single Row)	1
16	00-294677-00003	Clamp - Wire (3/4 I.D.)	6
17	SD-008-25	Self-Tapping Screw 10-16 x 1/2 Phil. Pan Hd., Type B	6
18	00-118544-00002	Lug - Grounding	1
19	WL-007-15	Lockwasher 1/4 External Shakeproof	1
20	SD-035-77	Self-Tapping Screw 1/4-20 x 3/8 Phil. Pan Hd., Type TT	1
21	SD-008-18	Self-Tapping Screw 8-18 x 3/8 Phil. Bndg. Hd., Type B	2
22	00-294677-00003	Clamp - Wire (3/4 I.D.)	2
23	00-294500-046-2	Transformer (T1) (300 VA, 50/60 Hz.)	1
24	SD-008-25	Self-Tapping Screw 10-16 x 1/2 Phil. Pan Hd., Type B	4
25	WL-014-07	Lockwasher #10 External Shakeproof (SST)	4
26	SD-008-25	Self-Tapping Screw 10-16 x 1/2 Phil. Pan Hd., Type B	2
27	00-087713-108-1	Contactor (25 Amp., 3-Pole)	1
28	00-087714-046-1	Relay (2-Pole) (30 Amp.)	1
29	FE-026-26	Adapter - Electrical	1
30	SD-008-18	Self-Tapping Screw 8-18 x 3/8 Phil. Bndg. Hd., Type B	2
31	SD-008-25	Self-Tapping Screw 10-16 x 1/2 Phil. Pan Hd., Type B	2
32	WL-014-07	Lockwasher #10 External Shakeproof (SST)	2
33	00-294500-040-1	Transformer (30 VA, 50/60 Hz.)	1
34	SC-041-14	Cap Screw 5/16-18 x 1-1/8 Hex Hd. (SST)	4
35	NS-036-19	Stop Nut 5/16-18 Hex Special (SST)	4
36	0F-035319	Label - Terminal Block	1
37	0F-044182	Label - Electric Ampacity	1
38	00-087714-046-1	Relay (2-Pole) (30 Amp.)	1
39	00-893874	Harness - Gas Heat	1

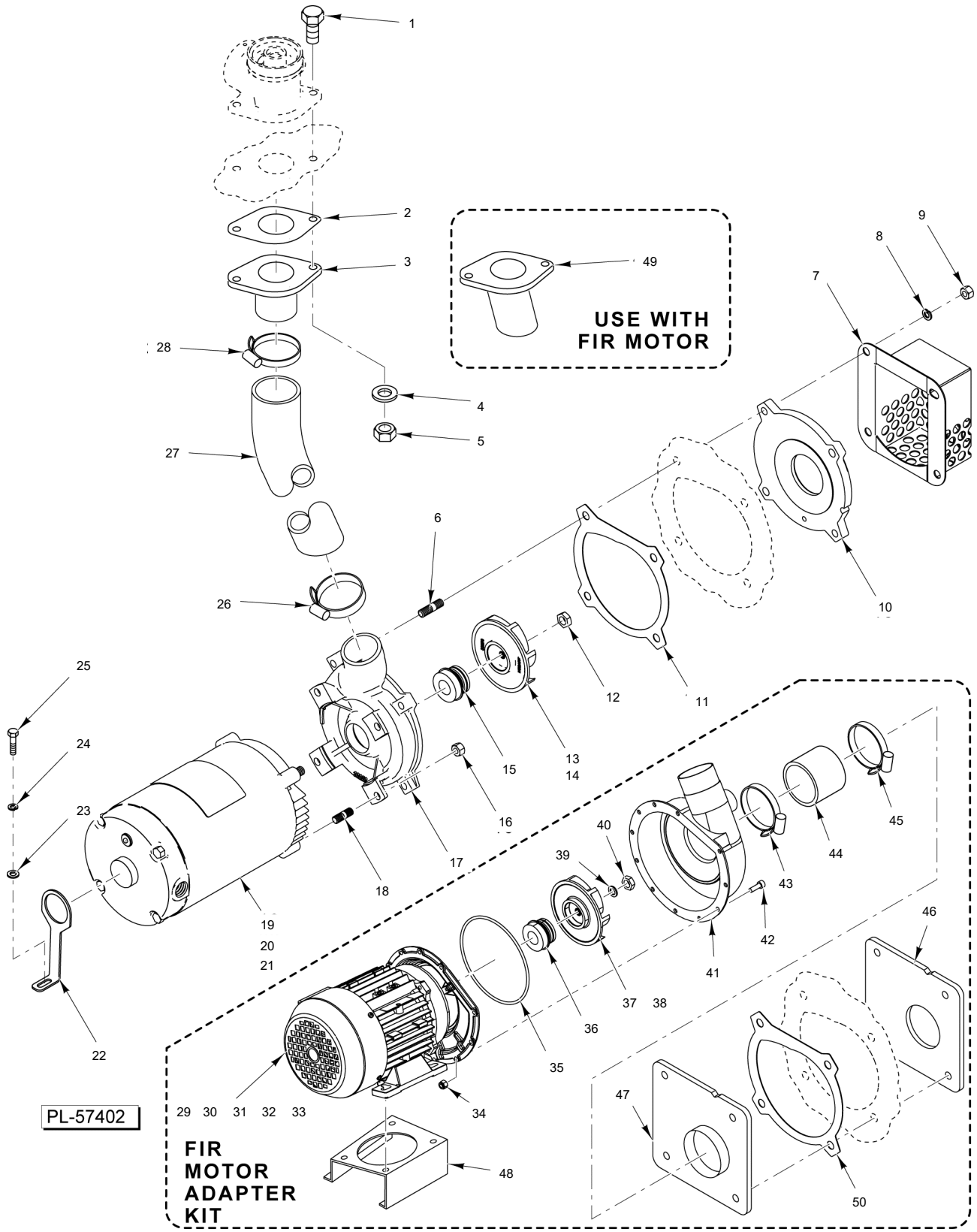

MOTOR AND PUMP
(BEFORE S/N 231131226)

MOTOR AND PUMP
(BEFORE S/N 231131226)

ILLUS.	PART NO.	NAME OF PART	AMT.
PL-6022			
1	SC-041-14	Cap Screw 5/16-18 x 1-1/8 Hex Hd. (SST)	2
2	00-893103	Gasket - Adapter	1
3	00-893102-00001	Adapter - Pump-to-Manifold	1
4	WS-017-01	Washer 0.328 x 0.875 x 0.062	2
5	NS-036-19	Stop Nut 5/16-18 Hex Special (SST)	2
6	00-893039-00006	Stud 3/8-16 x 1-5/8	4
7	00-893063	Screen - Pump	1
8	WL-006-28	Lockwasher 3/8 Helical (SST)	4
9	NS-015-13	Nut 3/8-16 Hex (SST)	4
10	00-893039-00005	Face - Pump Inside	1
11	00-893039-00004	Gasket - Pump-to-Tank	1
12	00-893039-00003	Jam Nut 7/16-20 Hex	1
13	00-893039-00002	Impeller (60 Hz.)	1
14	00-893039-00011	Impeller (50 Hz.)	1
15	00-274227-00006	Seal - Shaft	1
16	NS-015-13	Nut 3/8-16 Hex (SST)	4
17	00-893039-00001	Involute	1
18	00-893039-00007	Stud 3/8-16 x 1-1/8	4
19	00-893039-00008	Motor (208-240/480 V., 60 Hz., 3 Ph.)	1
20	00-913102-00184	Kit - Pump Motor (208-240V., 60Hz., 1Ph.)	1
21	00-893039-00010	Motor (240-380 V., 50 Hz., 3 Ph.)	1
22	00-893035	Brace - Pump	1
23	WS-017-01	Washer 0.328 x 0.875 x 0.062	1
24	WL-006-23	Lockwasher 5/16 Helical (SST)	1
25	SC-041-11	Cap Screw 5/16-18 x 3/4 Hex Hd. (SST)	1
26	00-542337	Clamp - Hose	1
27	00-893024	Hose - Discharge	1
28	00-542337	Clamp - Hose	1
29	00-936863-00001	Pump & Motor Assembly 208-240/480/60/3	1
30	00-941233-00002	Motor (208-240/60/1)	1
31	00-941233-00015	Fan - Cooling 60 Hz.	1
32	00-936863-00001	Pump & Motor Assembly 208-240/480/60/3	1
33	00-936863-00002	Pump & Motor Assembly 208-240/60/1	1
34	00-941233-00013	Lock Nut 6 mm (SST)	11
35	00-941233-00010	Seal	1
36	00-941233-00005	Shaft - Seal	1
37	00-941233-00006	Impeller (60 Hz.)	1
38	00-941233-00007	Impeller (50 Hz.)	1
39	00-941233-00008	Lockwasher 10 mm (SST)	1
40	00-941233-00009	Jam Nut 10 mm (SST)	1
41	00-941233-00011	Pump Shell (Outer)	1
42	00-941233-00012	Mach. Screw 6 mm x 18 mm (SST)	11
43	00-521462	Clamp - Hose	1
44	00-941241	Hose - Pump Intake	1
45	00-521462	Clamp - Hose	1
46	00-941102	Flange - Pump	1
47	00-941104	Bracket - Inlet	1
48	00-936772	Bracket - Motor Mounting	1
49	00-941106	Adapter (Pump-to-Manifold) (Use With FIR Motor)	1
50	00-893039-00004	Gasket - Pump-to-Tank	1

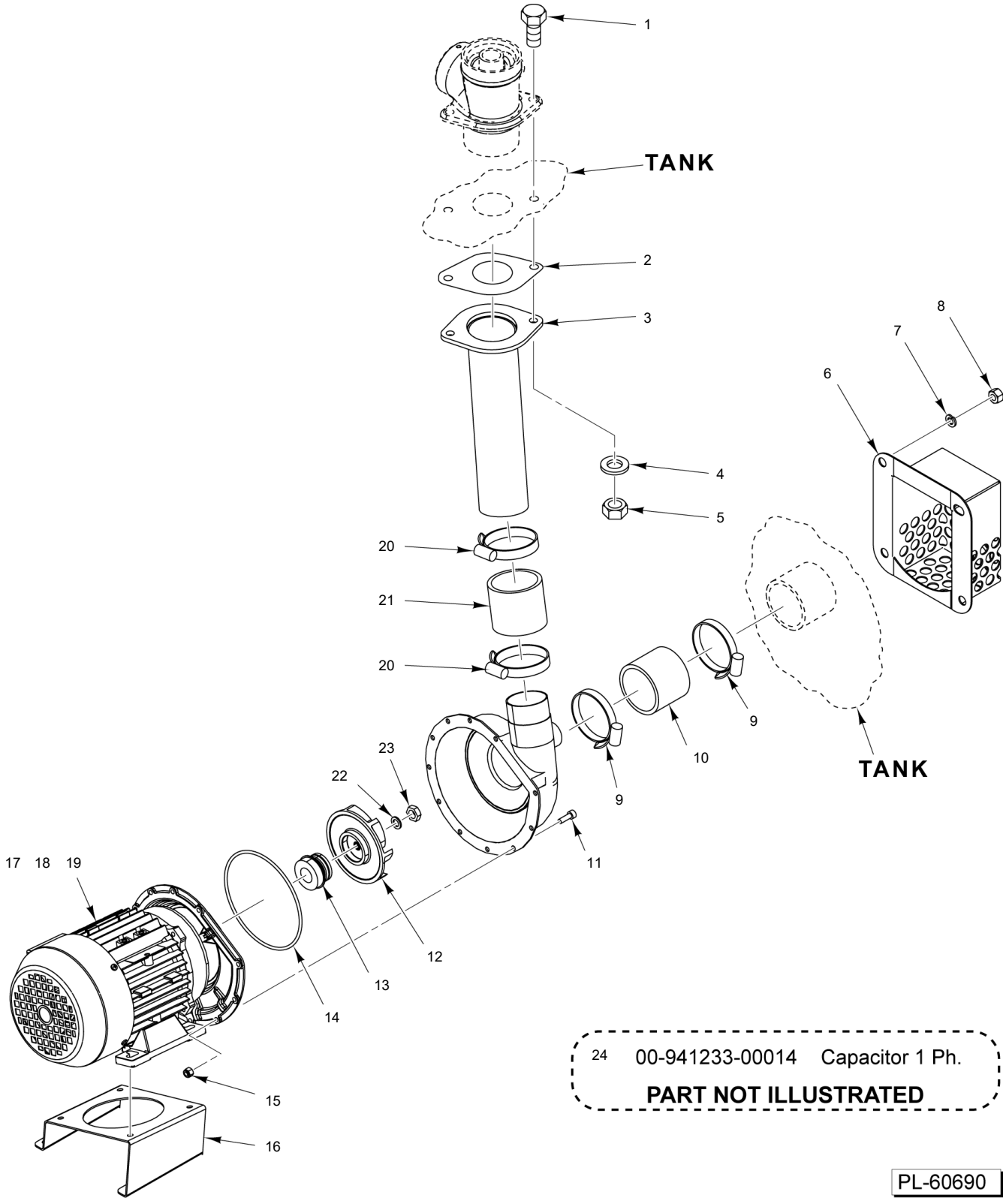

MOTOR AND PUMP
(STARTING S/N 231131226)

MOTOR AND PUMP
(STARTING S/N 231131226)

ILLUS.	PART NO.	NAME OF PART	AMT.
PL-25613			
1	SC-041-14	Cap Screw 5/16-18 x 1-1/8 Hex Hd. (SST)	2
2	00-893103	Gasket - Adapter	1
3	00-941106	Adapter (Pump-to-Manifold)	1
4	WS-017-01	Washer 0.328 x 0.875 x 0.062	2
5	NS-036-19	Stop Nut 5/16-18 Hex Special (SST)	2
6	00-893063	Screen - Pump	1
7	WL-006-23	Lockwasher 5/16 Helical (SST)	4
8	NS-015-11	Nut 5/16-18 Hex (SST)	4
9	00-521462	Clamp - Hose	2
10	00-941241	Hose - Pump Intake	1
11	00-941233-00012	Mach. Screw 6 mm x 18 mm (SST)	11
12	00-941233-00006	Impeller (60 Hz.)	1
13	00-941233-00005	Shaft - Seal	1
14	00-941233-00010	Seal	1
15	00-941233-00013	Lock Nut 6 mm (SST)	11
16	00-936772	Bracket - Motor Mounting	1
17	00-941233-00015	Fan - Cooling 60 Hz.	1
18	00-975233-00001	Pump & Motor Assy. 208-266/360-460/60/3	1
19	00-975233-00002	Pump & Motor Assy. 208-240/60/1	1
20	00-542337	Clamp - Hose	2
21	00-948763	Hose - Discharge	1
22	00-941233-00008	Lockwasher 10 mm (SST)	1
23	00-941233-00009	Jam Nut 10 mm (SST)	1
24	00-941233-00014	Capacitor 1 Ph.	1

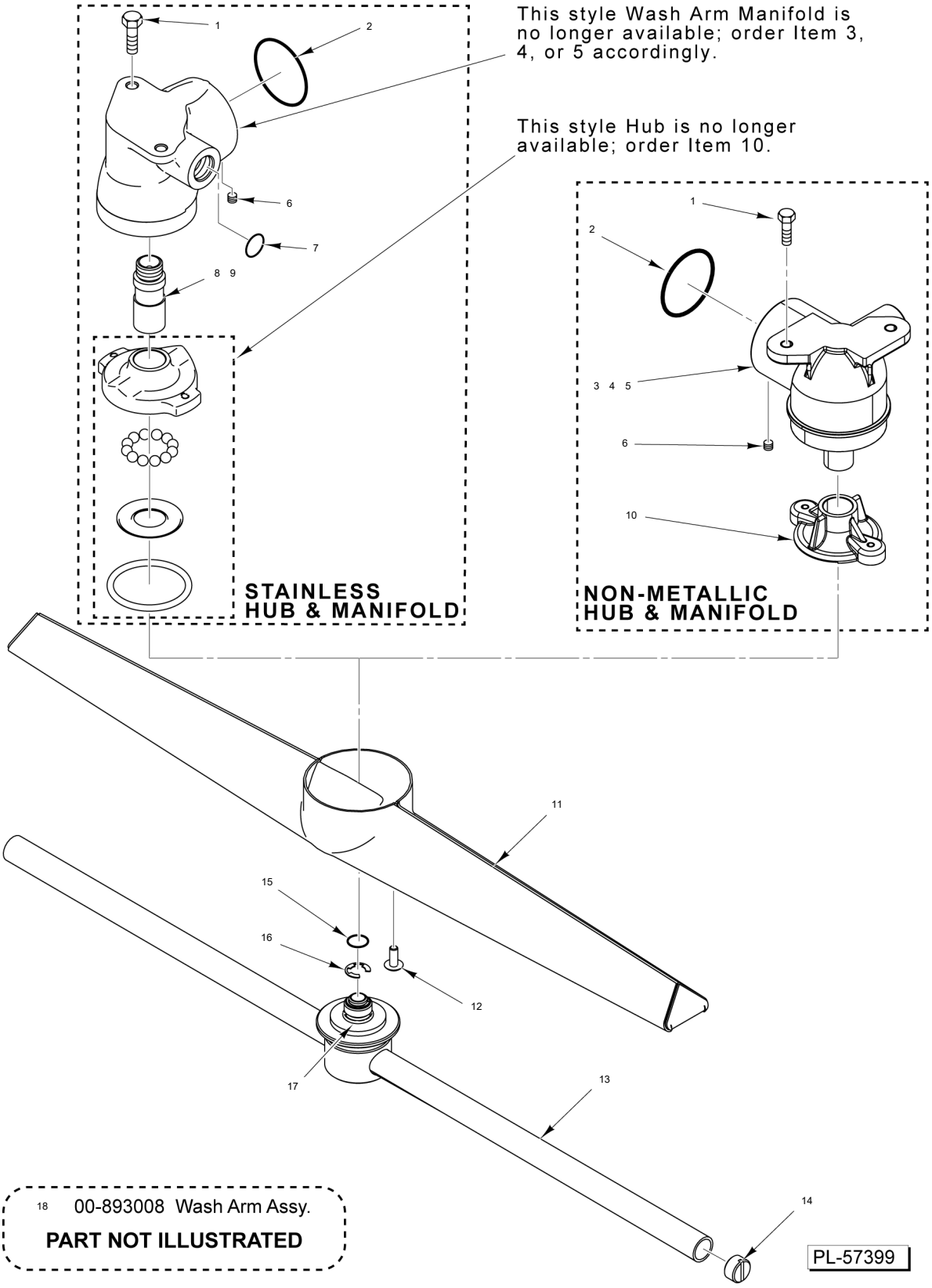

UPPER WASH ARM

UPPER WASH ARM

ILLUS.	PART NO.	NAME OF PART	AMT.
PL-6019			
1	SC-125-20	Cap Screw 5/16-18 x 3/8 Hex Hd.	2
2	00-067500-00110	O-Ring	1
3	00-974072-00001	Kit - Wash Manifold Assy. (AM15, AM15T, AM15F, & AM15SCB) (Incls. Shaft and Item 10)	1
4	00-974072-00002	Kit - Wash Manifold Assy. (AM15VL, AM15VLT, & AM15VLF) (Incls. Shaft and Item 10)	1
5	00-974072-00003	Kit - Wash Manifold Assy. (AM15VL) (50 Hz.) (Incls. Shaft and Item 10)	1
6	SC-055-01	Set Screw 10-24 x 1/4 Hex Hdls., Cup Pt. (SST)	1
7	00-067500-00117	O-Ring (Stainless Manifold Only)	1
8	00-893052	Shaft - Rinse Arm (AM15, AM15T, & AM15F) (Stainless Manifold Only)	1
9	00-893052-00002	Shaft - Rinse Arm (AM15VL, AM15VLT, & AM15VLF) (Stainless Manifold Only)	1
10	00-948668	Hub - Wash Arm	1
11	00-893007	Arm - Wash	1
12	SC-066-06	Mach. Screw 10-24 x 1/2 Phil. Truss Hd. (SST)	2
13	00-893093-00001	Arm - Rinse (Incls. Items 14 thru 17)	1
14	00-893093-00002	Plug - Rinse Arm	2
15	00-067500-00147	O-Ring	1
16	RR-011-98	Retaining Ring	1
17	00-893074	Bearingm Rinse Arm Assembly	1
18	00-893008	Wash Arm Assy. (Incls. Items 10 thru 12)	1

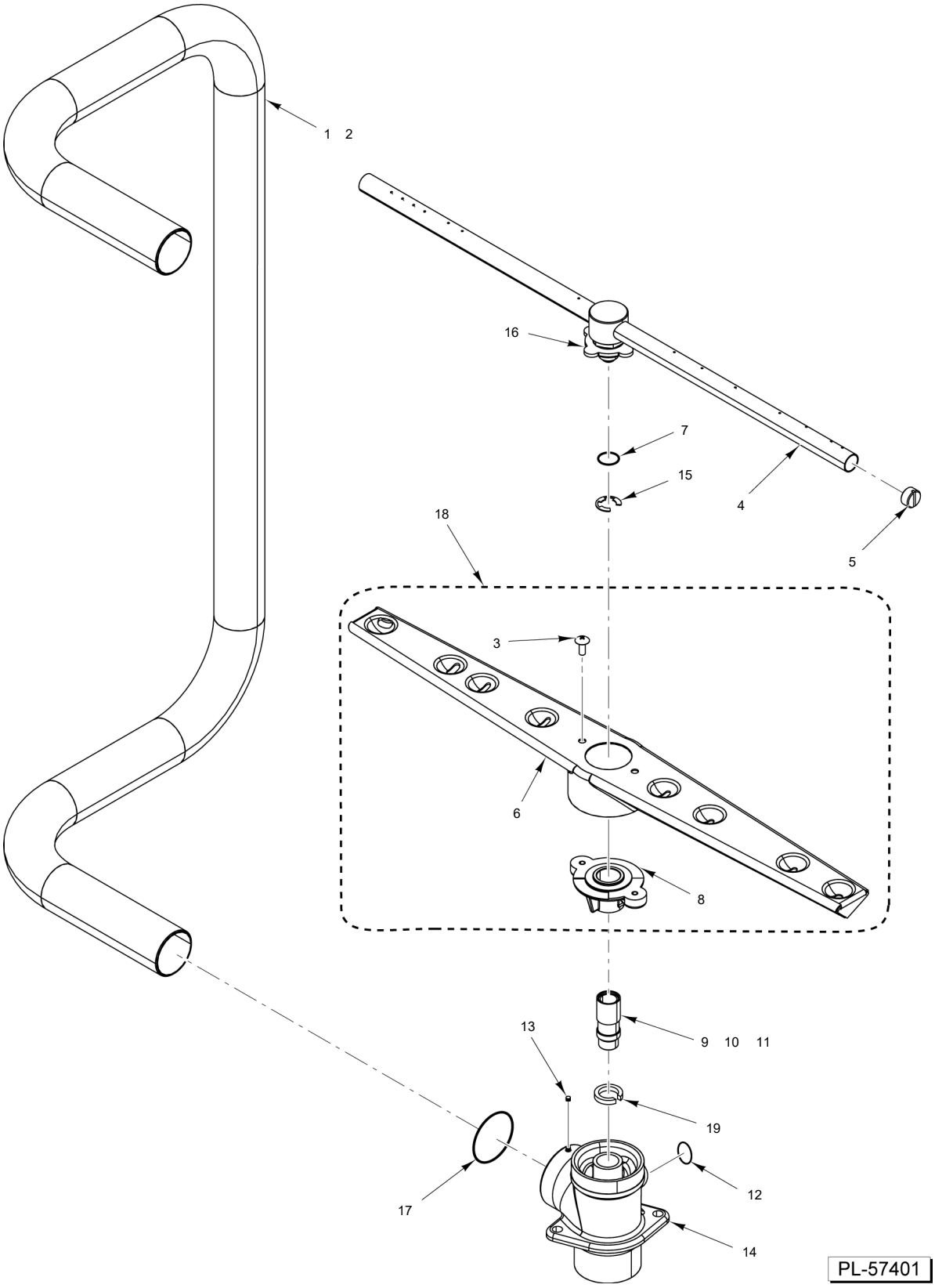

LOWER WASH ARM

LOWER WASH ARM

ILLUS.	PART NO.	NAME OF PART	AMT.
PL-6021			
1	00-893032	Tube - Wash (AM15)	1
2	00-893032-00002	Tube - Wash (AM15T & AM15F)	1
3	SC-066-06	Mach. Screw 10-24 x 1/2 Phil. Truss Hd. (SST)	2
4	00-893093-00001	Arm - Rinse (Incls. Items 5 & 16)	1
5	00-893093-00002	Plug - Rinse Arm	2
6	00-893007	Arm - Wash	1
7	00-067500-00147	O-Ring	1
8	00-948668	Hub - Wash Arm	1
9	00-893052	Shaft - Rinse Arm	1
10	00-893052-00002	Shaft - Rinse Arm (AM15) (Ventless)	1
11	00-893052-00003	Shaft - Rinse Arm (AM15VL) (Ventless) (50 Hz.)	1
12	00-067500-00153	O-Ring	1
13	SC-055-01	Set Screw 10-24 x 1/4 Hex Hdls., Cup Pt. (SST)	2
14	00-893030	Manifold - Wash (Lower)	1
15	RR-011-98	Retaining Ring	1
16	00-893074	Bearingm Rinse Arm Assembly	1
17	00-067500-00110	O-Ring	1
18	00-893008	Wash Arm Assy. (Incls. Items 3, 6, & 8)	1
*19	00-893044	Bushing - Wash Arm	0

* Only use with metal Wash Arm Hub, Item 8.

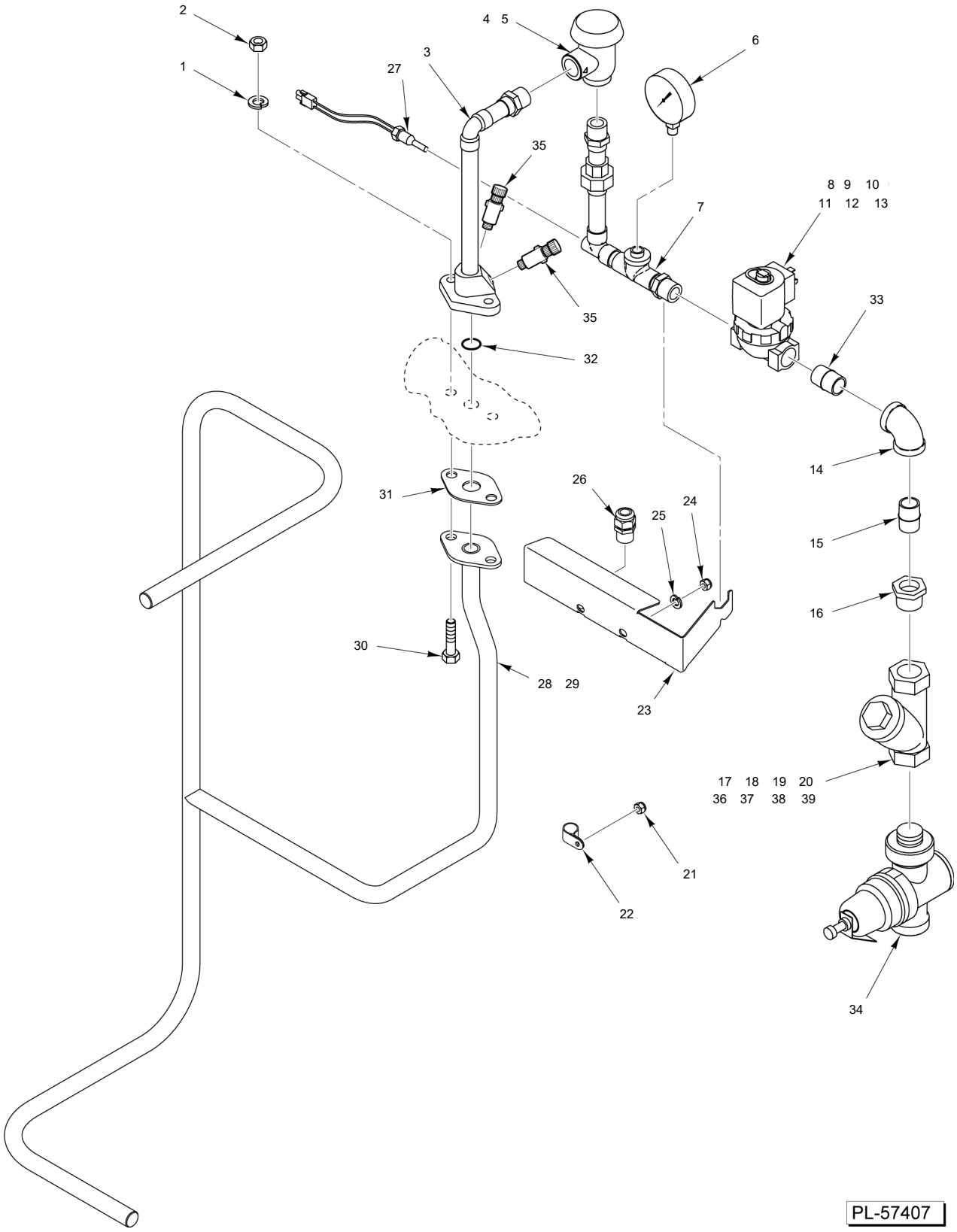

RINSE PIPING
(WITHOUT BOOSTER AND WITHOUT STEAM CONDENSER)

RINSE PIPING
(WITHOUT BOOSTER AND WITHOUT STEAM CONDENSER)

ILLUS.	PART NO.	NAME OF PART	AMT.
PL-6027			
1	WL-006-23	Lockwasher 5/16 Helical (SST)	2
2	NS-036-19	Stop Nut 5/16-18 Hex Special (SST)	2
3	00-893054	Piping - Fill	1
4	00-292909	Vacuum Breaker 1/2 In. (Chrome)	1
5	00-292910	Service Kit - Vacuum Breaker	1
6	00-918429	Gauge - Water Pressure	1
7	00-893058	Fill Piping Assy.	1
8	00-893100-00001	Solenoid Valve (1/2) (120 V.) (Before S/N 231154994)	1
9	00-913102-00531	Kit - Solenoid Valve 1/2" (Starting S/N 231154994)	1
10	00-892132	Coil - Solenoid Valve (120 V.) (Before S/N 231154994)	1
11	00-936283	Coil - Solenoid Valve (120 V.) (Starting S/N 231154994)	1
12	00-893101	Service Kit - 1/2 Solenoid Valve (Before S/N 231154994)	1
13	00-476615	Connector - Din (Parker style valve only)	1
14	FP-015-17	Elbow - Pipe 1/2 x 90 Deg. (Brass)	1
15	FP-054-36	Pipe 1/2 x 2 TBE (Brass)	1
16	FP-027-22	Bushing - Pipe 3/4 to 1/2 (Brass)	1
*17	00-186922	Strainer - Line (3/4 In.) (Brass) (Kitz) (Incls. Items 18, 19, & 20) (Alternate to Item 36)	1
18	00-186923	Plug - Branch	1
19	00-186925	Screen - Line Strainer	1
20	00-186924	Gasket - Branch Plug	1
21	NS-047-94	Lock Nut 3/16 Washer Type (SST)	1
22	00-294677-00004	Clamp - Wire (1 I.D.)	1
23	00-893053	Bracket - Fill Piping	1
24	NS-015-11	Nut 5/16-18 Hex (SST)	2
25	WL-006-23	Lockwasher 5/16 Helical (SST)	2
26	FE-022-84	Connector - Strain Relief	2
27	00-328994	Probe Assy. - Rinse	1
28	00-893038-00001	Inside Rinse Piping Assy. (AM15)	1
29	00-893038-00004	Inside Rinse Piping Assy. (AM15T & AM15F)	1
30	SC-041-12	Cap Screw 5/16-18 x 7/8 Hex Hd. (SST)	2
31	00-276407	Gasket - Rinse Pipe	1
32	00-067500-00012	O-Ring	1
33	FP-040-44	Pipe 1/2 x 1-3/8 TBE (Brass)	1
34	00-974829	Regulator - Pressure	1
35	FP-092-29	Fitting 1/4 Comp. x 1/8 NPT	2
*36	00-186922	Strainer - Line (3/4 In.) (Brass) (Apollo / Conbraco) (Incls. tems 37, 38, & 39) (Alternate to Item 17)	1
37	00-749802-00001	Cap	1
38	00-749802-00002	Gasket	1
39	00-749802-00003	Screen (80 Mesh)	1

* Kitz line strainer is approx. 1/4" shorter than Apollo / Conbraco.

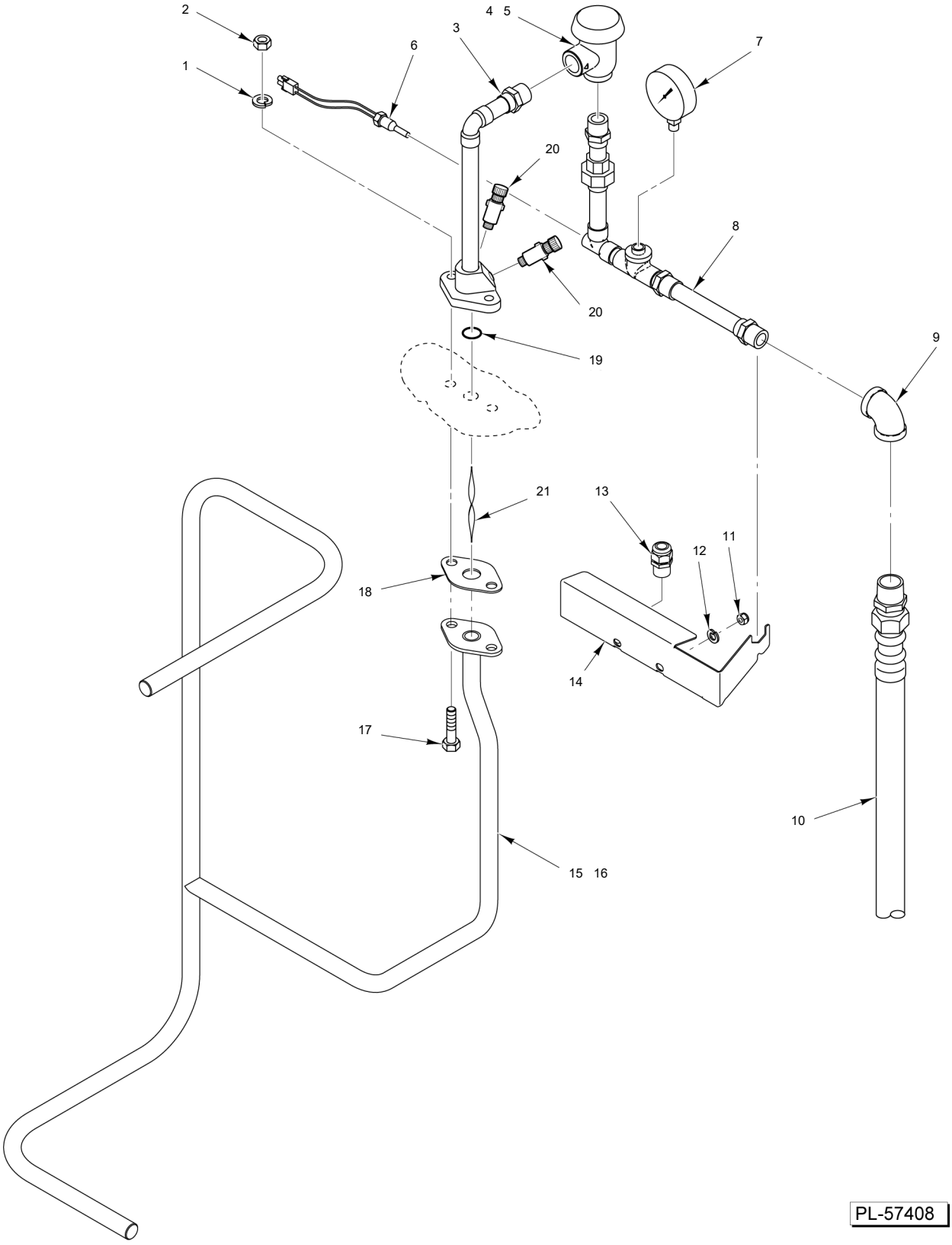

RINSE PIPING
(WITH BOOSTER AND WITHOUT STEAM CONDENSER)

RINSE PIPING
(WITH BOOSTER AND WITHOUT STEAM CONDENSER)

ILLUS.	PART NO.	NAME OF PART	AMT.
PL-6028			
1	WL-006-23	Lockwasher 5/16 Helical (SST)	2
2	NS-036-19	Stop Nut 5/16-18 Hex Special (SST)	2
3	00-893054	Piping - Fill	1
4	00-292909	Vacuum Breaker 1/2 In. (Chrome)	1
5	00-292910	Service Kit - Vacuum Breaker	1
6	00-328994	Probe Assy. - Rinse	1
7	00-918429	Gauge - Water Pressure	1
8	00-893059	Fill Piping Assy.	1
9	FP-015-16	Elbow - Pipe 1/2 x 90 Deg. (Brass)	1
10	00-893444-00002	Hose - Water 1/2 x 84 In. Braided (SST)	1
11	NS-015-11	Nut 5/16-18 Hex (SST)	2
12	WL-006-23	Lockwasher 5/16 Helical (SST)	2
13	FE-022-84	Connector - Strain Relief	1
14	00-893053	Bracket - Fill Piping	1
15	00-893038-00001	Inside Rinse Piping Assy. (AM15)	1
16	00-893038-00004	Inside Rinse Piping Assy. (AM15T & AM15F)	1
17	SC-041-12	Cap Screw 5/16-18 x 7/8 Hex Hd. (SST)	2
18	00-276407	Gasket - Rinse Pipe	1
19	00-067500-00012	O-Ring	1
20	FP-092-29	Fitting 1/4 Comp. x 1/8 NPT	2
21	00-562699	Insert - Turbulator (AM15SCB)	1

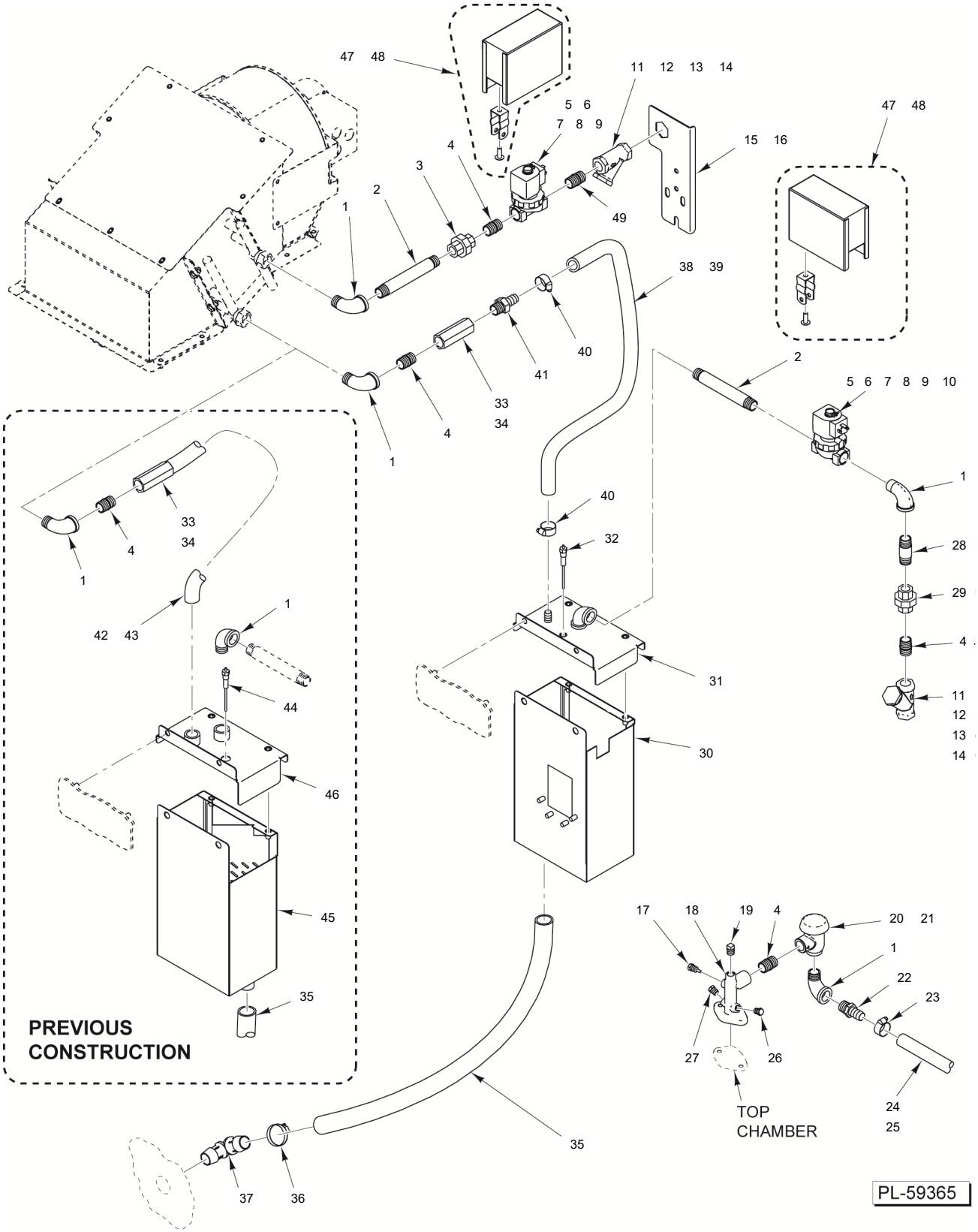

VENTLESS OUTSIDE PIPING (BEFORE S/N 231197040)

VENTLESS OUTSIDE PIPING
(BEFORE S/N 231197040)

ILLUS.	PART NO.	NAME OF PART	AMT.
PL-7027			
1	FP-015-17	Elbow - Pipe 1/2 x 90 Deg. (Brass)	5
2	FP-040-86	Pipe 1/2 x 5-1/2 TBE (Brass)	2
3	FP-022-12	Union - Pipe (Brass)	1
4	FP-040-42	Pipe 1/2 x 1-1/8 TBE (Brass)	4
5	00-893100-00001	Solenoid Valve (1/2) (120 V.) (Before S/N 231154994)	2
6	00-913102-00531	Kit - Solenoid Valve 1/2" (Starting S/N 231154994)	2
7	00-941798	Valve (Deltrol) - Solenoid (1/2) (120 V.) (Starting S/N 231203542)	1
8	00-893101	Service Kit - 1/2 Solenoid Valve (Before S/N 231154994)	0
9	00-892132	Coil - Solenoid Valve (120 V.) (Before S/N 231154994)	2
10	00-936283	Coil - Solenoid Valve (120 V.) (Starting S/N 231154994)	2
11	00-892921	Strainer - Line (Incls. Items 12, 13, & 14)	2
12	00-892922-00001	Cap	2
13	00-892922-00002	Gasket	2
14	00-892922-00003	Screen	2
15	00-941164	Bracket - Condenser	1
16	00-941136	Bracket - Ventless Electric	1
17	00-328994	Probe Assy. - Rinse	1
18	00-919560	Manifold - Top Rinse	1
19	FP-028-07	Pipe Plug 1/4 Sq. Hd. (Brass)	1
20	00-292909	Vacuum Breaker 1/2 In. (Chrome)	1
21	00-292910	Service Kit - Vacuum Breaker	1
22	FP-087-39	Fitting - Hose 5/8 x 1/2 (Brass)	2
23	00-528499	Clamp - Hose (SST)	2
24	00-892244-00009	Hose - Adapta Flex (67 In.) (AM15VL)	1
25	00-892244-00010	Hose - Adapta Flex (AM15VLT & AM15VLF)	1
26	00-749123	Plug - Pipe	1
27	00-749123	Plug - Pipe	1
28	00-941215	Restrictor (1/2 In.)	1
29	FP-022-12	Union - Pipe (Brass)	1
30	00-941583	Tank Weldment	1
31	00-941685	Lid - Tank (Heat Recovery)	1
32	00-329275-00003	Probe - Sump & Wire Assy.	1
33	00-941239	Restrictor - Flow (1/2 In.)	1
34	00-941196	Control - Flow	1
35	00-936468-00002	Hose - Ventless Intake	1
36	00-557627	Clamp - Hose	1
37	00-941127	Elbow - Hose (1 In.)	1
38	00-941726-00006	Hose 3/8 (12 In. Lg.)	1
39	00-941726-00005	Hose 3/8 (25 In. Lg.)	1
40	00-558090	Clamp - Hose (17mm)	2
41	FP-090-64	Adapter 1/2 MPT to 3/8 Hose	1
42	00-941726-00005	Hose 3/8 (25 In. Lg.)	1
43	00-918390-00007	Hose - Braided Water 1/2 x 48 In. (SST) (AM15VLT & AM15VLF)	1
44	00-329275-00002	Probe - Sump & Wire Assy. (Before S/N 231154994)	1
45	00-941100	Tank - Heat Recovery	1
46	00-936997-00001	Tank - Heat Recovery Lid	1
47	00-974129	Kit - Solenoid Cover (AM15VL & AM15VLT) (Starting S/N 231154994)	2
48	00-974129	Kit - Solenoid Cover (AM15SVL) (Starting 231197040) (AM15VL) (Starting S/N 231203542)	1
49	FP-040-43	Pipe 1/2 x 1-1/4 TBE (Brass)	1

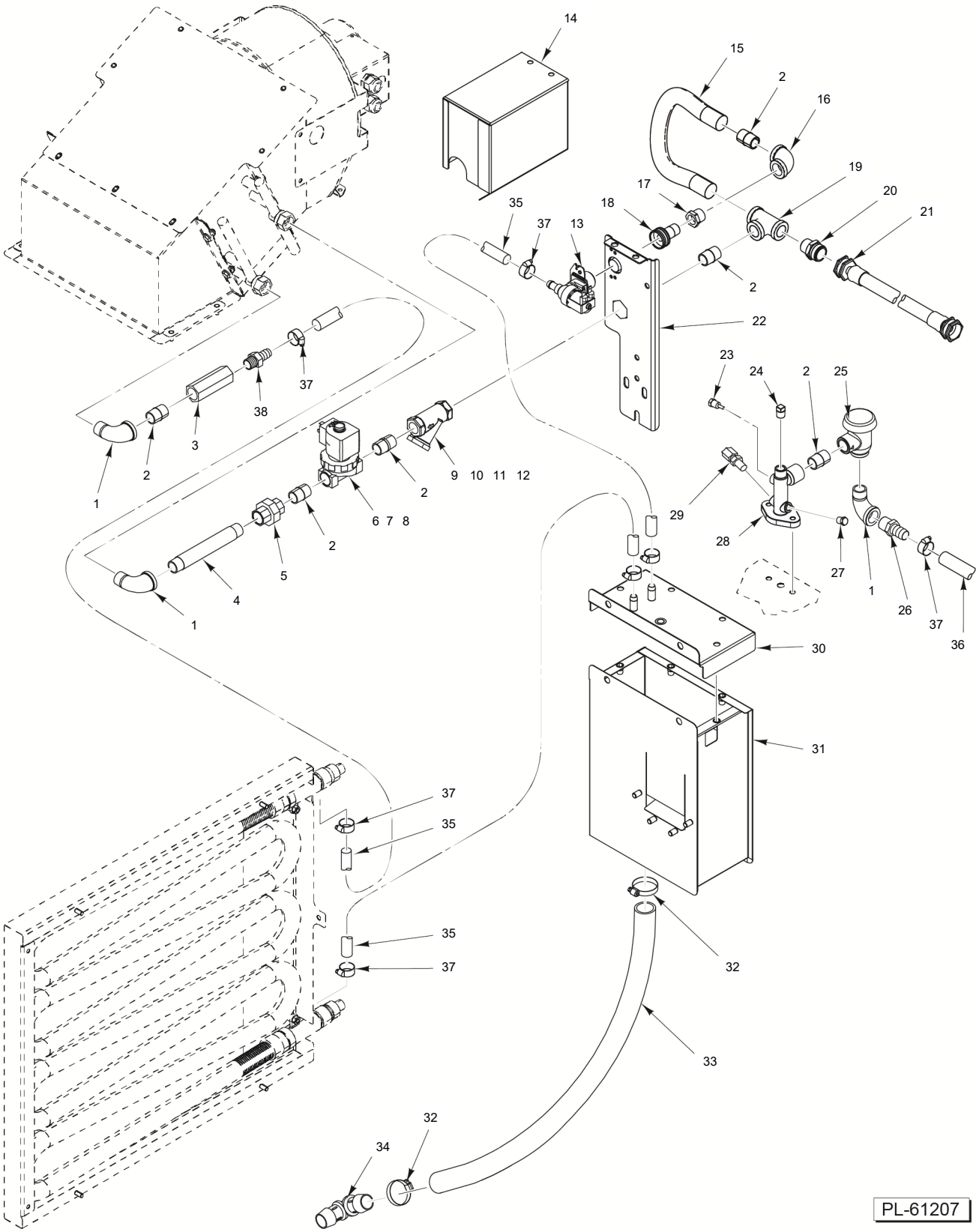

VENTLESS OUTSIDE PIPING
(STARTING S/N 231197040)

VENTLESS OUTSIDE PIPING
(STARTING S/N 231197040)

ILLUS.	PART NO.	NAME OF PART	AMT.
PL-30423			
1	FP-015-17	Elbow - Pipe 1/2 x 90 Deg. (Brass)	2
2	FP-040-42	Pipe 1/2 x 1-1/8 TBE (Brass)	5
3	00-941239	Restrictor - Flow (1/2 In.)	1
4	FP-040-86	Pipe 1/2 x 5-1/2 TBE (Brass)	1
5	FP-022-12	Union - Pipe (Brass)	1
6	00-893100-00001	Solenoid Valve (1/2) (120 V.) (Incls. Items 7 & 8)	1
7	00-892132	Coil - Solenoid Valve (120 V.)	1
8	00-893101	Service Kit - 1/2 Solenoid Valve	1
9	00-892921	Strainer - Line (Incls. Items 10, 11 & 12)	1
10	00-892922-00001	Cap	1
11	00-892922-00002	Gasket	1
12	00-892922-00003	Screen	1
13	00-941798	Valve (Deltrol) - Solenoid (1/2) (120 V.)	1
14	00-975252	Cover - Solenoid (Starting S/N 231197040)	1
15	00-918390-00006	Hose - Braided Water 1/2 x 22 In. (SST)	1
17	FP-027-13	Bushing - Pipe 1/2 to 3/8 (Brass)	1
16	FP-015-16	Elbow - Pipe 1/2 x 90 Deg. (Brass)	1
18	FP-088-17	Fitting - Hose	1
19	FP-019-21	Tee - Pipe 1/2 x 1/2 x 1/2 (Brass)	1
20	FP-081-15	Fitting - Hose 5/8 x 3/4 Hose Male to 1/2 MPT	1
21	00-293625-00002	Hose - Fill (96 In.)	1
22	00-562218	Bracket	1
23	00-328994	Probe Assy. - Rinse	1
24	FP-028-07	Pipe Plug 1/4 Sq. Hd. (Brass)	1
25	00-292909-00003	Vacuum Breaker (1/2 In.)	1
26	FP-087-39	Fitting - Hose 5/8 Hose to 1/2 NPT (Brass)	1
27	00-749123	Plug - Pipe (Qty 1 - AM15SVLT / Qty 2 - AM15VL, VLT, VLF)	0
28	00-919560	Manifold - Top Rinse	1
29	FP-092-29	Fitting 1/4 Comp. x 1/8 NPT (Qty 1 - AM15SVL, SVLT / Qty 2 - AM15SCB)	0
30	00-975251	Lid - Tank (Heat Recovery)	1
31	00-941583	Tank Weldment	1
32	00-557627	Clamp - Hose	1
33	00-936468-00002	Hose - Ventless Intake	1
34	00-941127	Elbow - Hose (1 In.)	1
35	00-941726-00018	Hose 3/8 (96 In. Lg.) (Cut to Length)	0
36	00-892244-00010	Hose - Flex	0
37	00-558090	Clamp - Hose (17mm)	0
38	FP-090-64	Adapter 1/2 MPT to 3/8 Hose	1

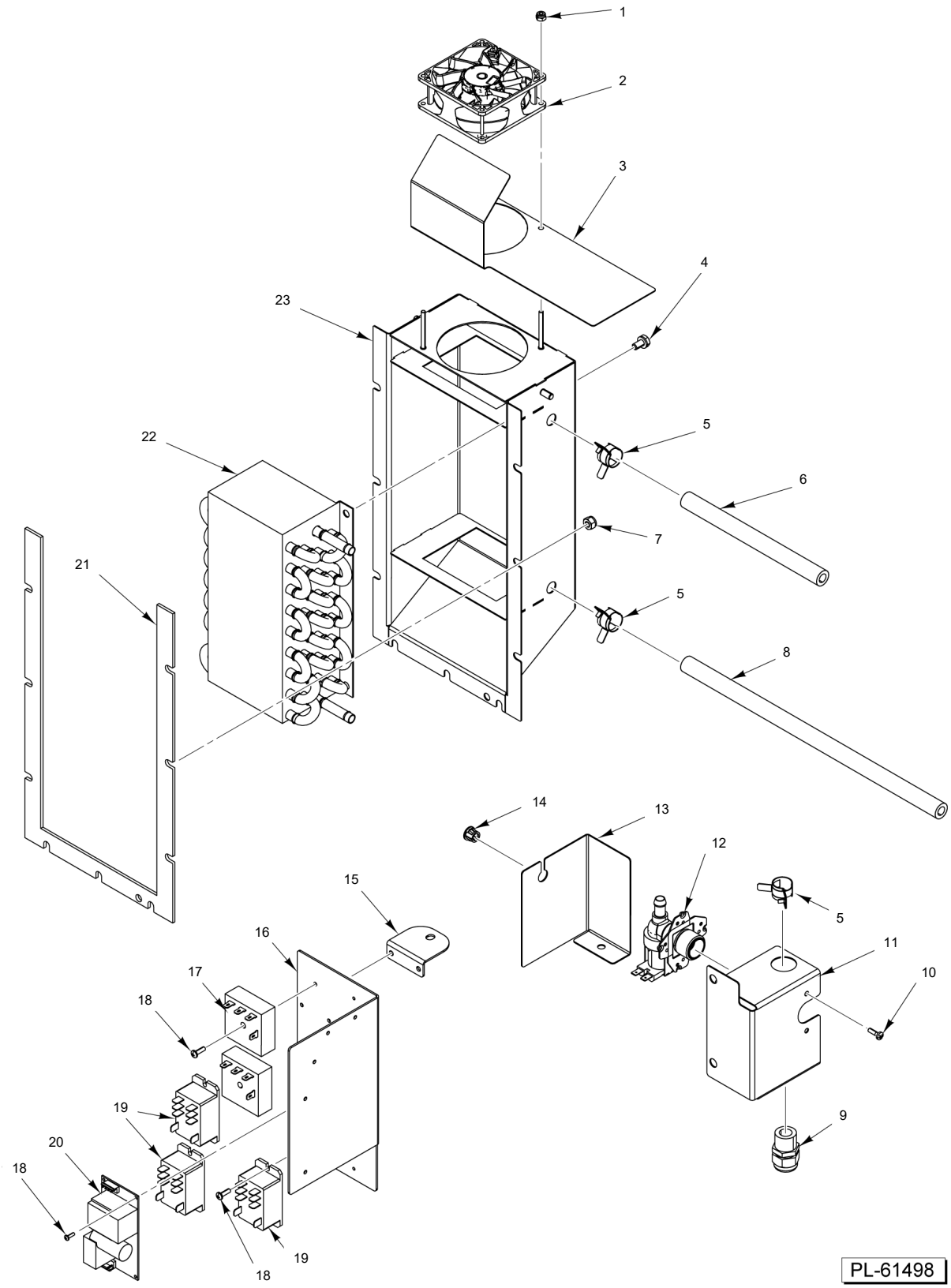

VENTLESS COMPONENTS (AM15SCBVL)

VENTLESS COMPONENTS (AM15SCBVL)

ILLUS.	PART NO.	NAME OF PART	AMT.
PL-32741			
1	NS-031-08	Stop Nut 8-32 Special (SST)	2
2	00-975453	Fan (24 V.)	1
3	00-562956	Deflector	1
4	SC-041-50	Cap Screw 1/4-20 x 1/2 Hex Hd. (SST)	2
5	00-558090	Clamp - Hose (17mm)	3
6	00-941726-00022	Hose (7-1/2 In.)	0
7	NS-047-82	Stop Nut 1/4-20 Hex (SST)	0
8	00-941726-00018	Hose 3/8 (96 In. Lg.)	0
9	FE-022-84	Connector - Strain Relief	1
10	SD-038-74	Self-Tapping Screw M4 x 0.7 x 14 mm Phil. Pan Hd., Type TT	2
11	00-562935	Bracket	1
12	00-941798-00002	Valve	1
13	00-562938	Bracket	1
14	FE-016-23	Bushing	1
15	00-941300	Bracket - Capacitor Mounting	1
16	00-562971	Plate - Base	1
17	00-562208-00001	Relay - Time Delay	2
18	SC-125-30	Mach. Screw 4-40 x 3/8 Phil. Pan Hd. (SST)	0
19	00-087714-046-1	Relay (2-Pole) (30 Amp.)	3
20	00-562538-00002	Power Supply (24 VDC)	1
21	00-975457	Gasket - Housing	1
22	00-562928-00002	Coil	1
23	00-975341	Enclosure - Coil	1

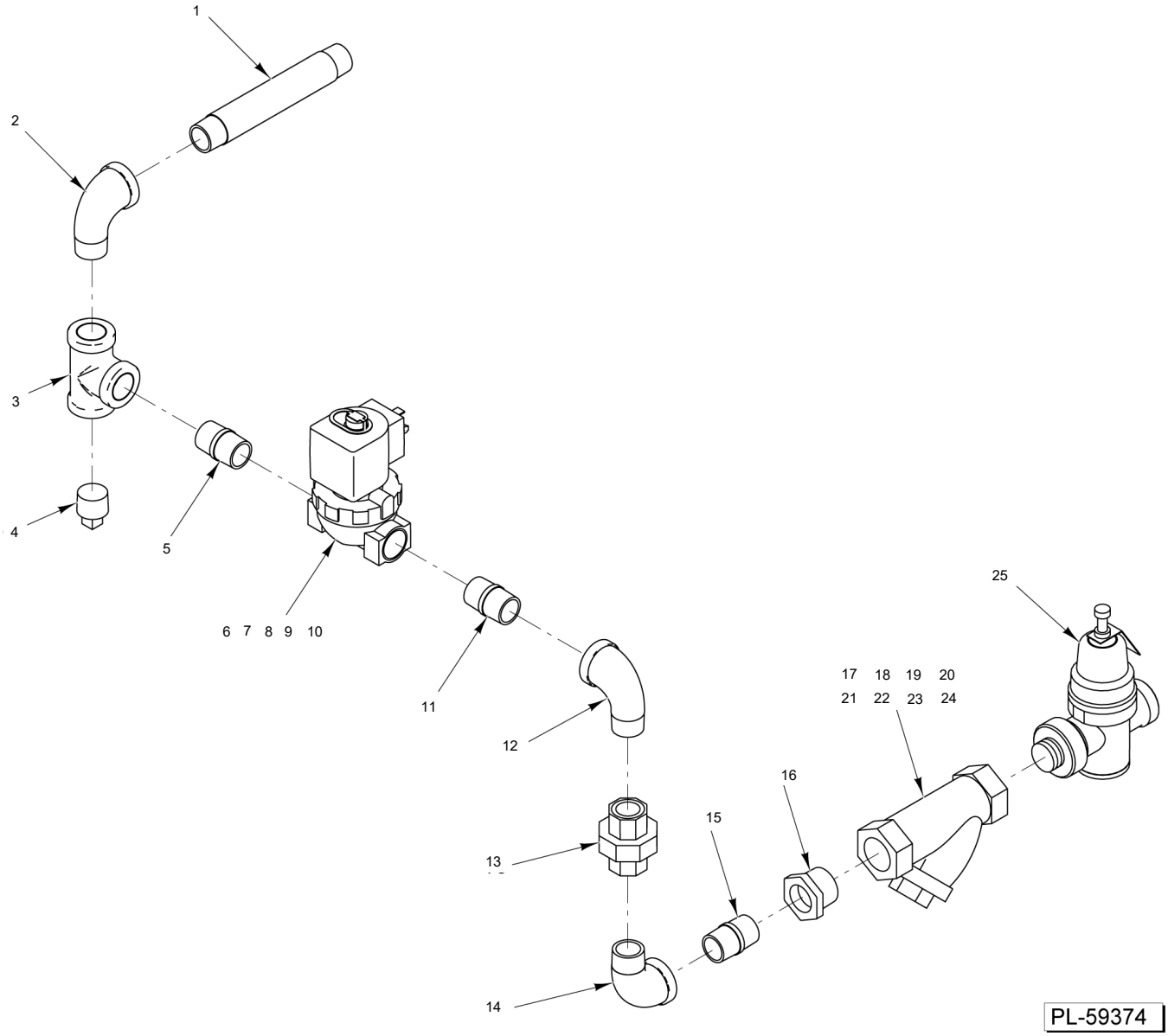

BOOSTER PIPING
(AM15, AM15T, AM15F, & AM15SCB)

BOOSTER PIPING
(AM15, AM15T, AM15F, & AM15SCB)

ILLUS.	PART NO.	NAME OF PART	AMT.
PL-7029			
1	FP-040-95	Pipe 1/2 x 7 TBE (Brass)	1
2	FP-015-17	Elbow - Pipe 1/2 x 90 Deg. (Brass)	1
3	FP-019-21	Tee - Pipe 1/2 x 1/2 x 1/2 (Brass)	1
4	FP-028-15	Pipe Plug 1/2 Sq. Hd. (Brass)	1
5	FP-040-42	Pipe 1/2 x 1-1/8 TBE (Brass)	1
6	00-893100-00001	Solenoid Valve (1/2) (120 V.) (Before S/N 231154994)	1
7	00-913102-00531	Kit - Solenoid Valve 1/2" (Starting S/N 231154994)	1
8	00-893101	Service Kit - 1/2 Solenoid Valve (Before S/N 231154994)	0
9	00-892132	Coil - Solenoid Valve (120 V.) (Before S/N 231154994)	1
10	00-936283	Coil - Solenoid Valve (120 V.) (Starting S/N 231154994)	1
11	FP-040-42	Pipe 1/2 x 1-1/8 TBE (Brass)	1
12	FP-015-17	Elbow - Pipe 1/2 x 90 Deg. (Brass)	1
13	FP-022-12	Union - Pipe (Brass)	1
14	FP-015-17	Elbow - Pipe 1/2 x 90 Deg. (Brass)	1
15	FP-040-42	Pipe 1/2 x 1-1/8 TBE (Brass)	1
16	FP-027-22	Bushing - Pipe 3/4 to 1/2 (Brass)	1
*17	00-186922	Strainer - Line (3/4 In.) (Brass) (Kits) (Incls. Items 18, 19, & 20) (Alternate to Item 21)	1
18	00-186923	Plug - Branch	0
19	00-186924	Gasket - Branch Plug	1
20	00-186925	Screen - Line Strainer	1
*21	00-186922	Strainer - Line (3/4 In.) (Brass) (Apollo / Conbraco) (Incls. tems 22, 23, &, 24) (Alternate to Item 17)	1
22	00-749802-00001	Cap	1
23	00-749802-00002	Gasket	1
24	00-749802-00003	Screen (80 Mesh)	1
25	00-974829	Regulator - Pressure	1

* Kitz line strainer is approx. 1/4" shorter than Apollo / Conbraco.

19 00-749123 Plug - Pipe

PART NOT ILLUSTRATED

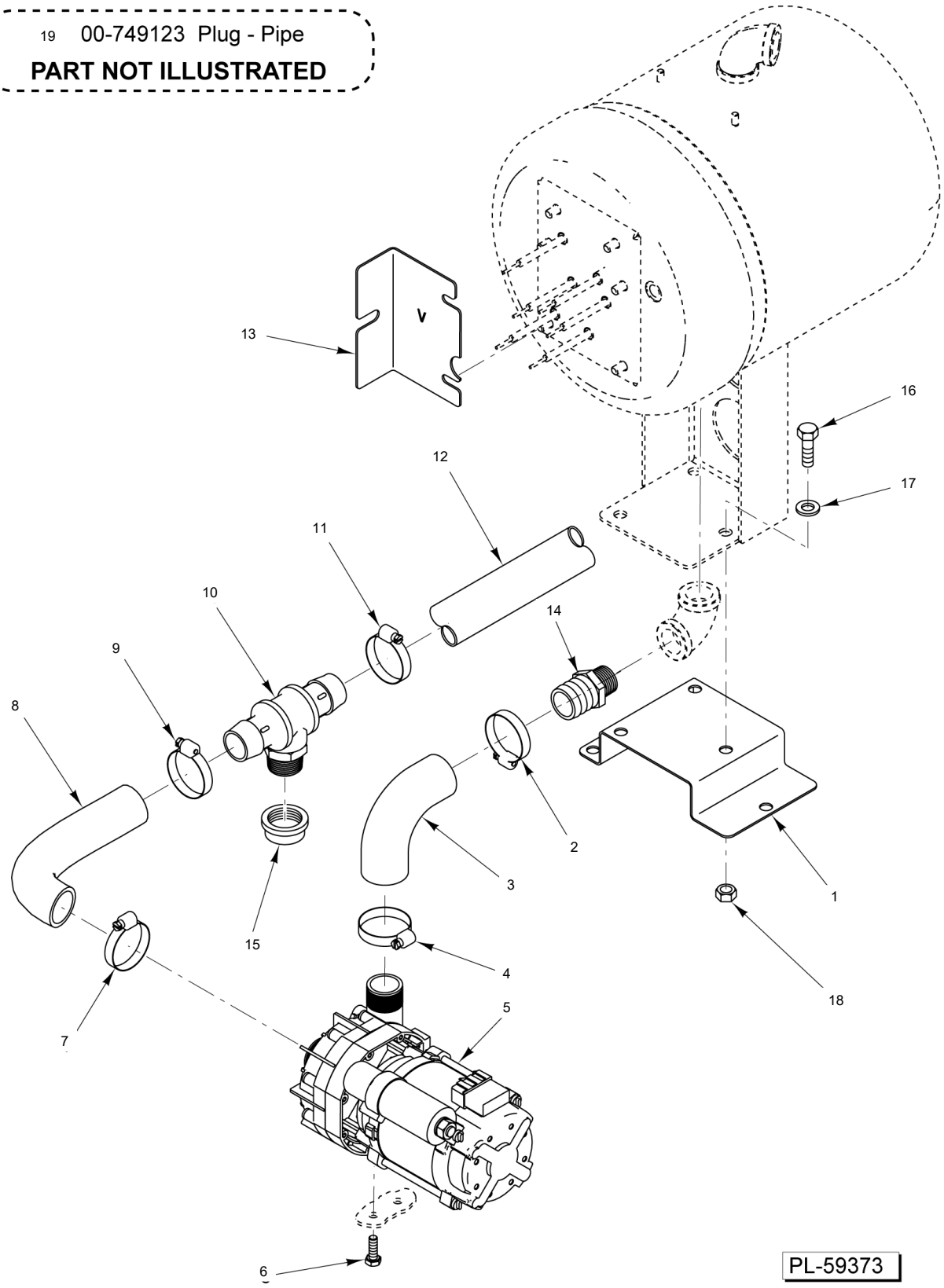

RINSE PUMP ASSEMBLY
(AM15VL, AM15VLT, & AM15VLF)

RINSE PUMP ASSEMBLY
(AM15VL, AM15VLT, & AM15VLF)

ILLUS.	PART NO.	NAME OF PART	AMT.
PL-7028			
1	00-941133	Mount - Booster Spacer	1
2	00-557627	Clamp - Hose	1
3	00-950423-00002	Hose - Pump-to-Booster	1
4	00-557627	Clamp - Hose	1
5	00-936994	Pump - Rinse (208-240 V., 60 Hz., 1 Ph.)	1
6	SC-120-48	Cap Screw M6 x 1.0 x 18mm Hex Hd. (SST)	2
7	00-557627	Clamp - Hose	1
8	00-918135	Hose - Drain Pump Inlet	1
9	00-557627	Clamp - Hose	1
10	00-941172	Tee - Branch (1 In. x 3/4 In.)	1
11	00-557627	Clamp - Hose	2
12	00-936468-00003	Hose (1 In. x 15 In.)	1
13	00-941148	Bracket - Ventless Booster Support	1
14	00-941149	Adapter - Hose (1/2 to 1 In.)	1
15	FP-092-59	Cap - Plastic	1
16	SC-041-11	Cap Screw 5/16-18 x 3/4 Hex Hd. (SST)	3
17	WS-017-01	Washer 0.328 x 0.875 x 0.062	3
18	NS-036-19	Stop Nut 5/16-18 Hex Special (SST)	3
19	00-749123	Plug - Pipe	1

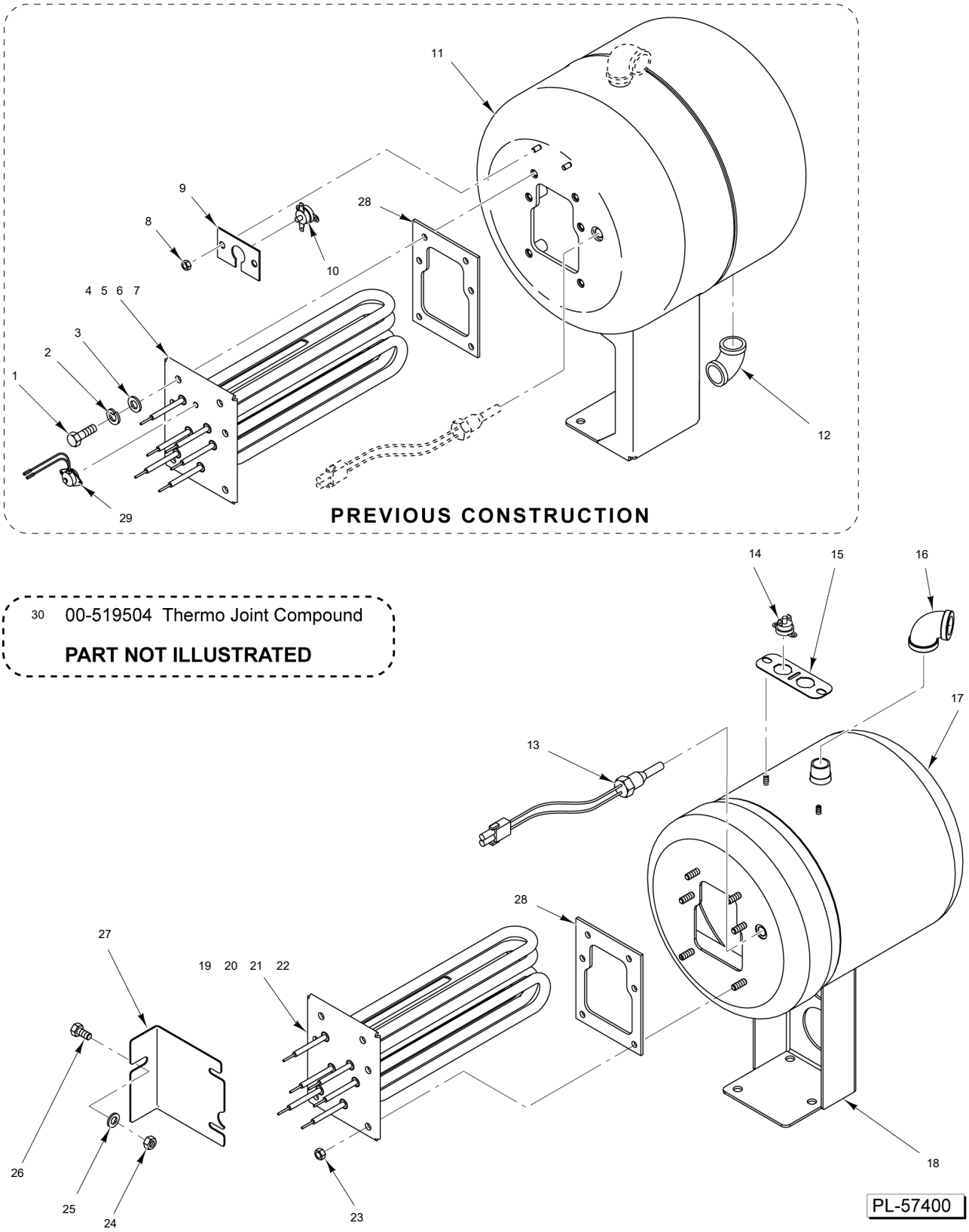

ELECTRIC BOOSTER TANK

ELECTRIC BOOSTER TANK

ILLUS.	PART NO.	NAME OF PART	AMT.
PL-6020			
1	SC-041-01	Cap Screw 1/4-20 x 3/4 Hex Hd. (SST)	6
2	WL-006-17	Lockwasher 1/4 Helical (SST)	6
3	WS-017-06	Washer .281 x .625 x .062 (SST)	6
4	00-749554-00002	Heater (13 kW) (240 V.) (Before S/N 231115487)	1
5	00-749554-00001	Heater (13 kW) (208 V.) (Before S/N 231115487)	1
6	00-749554-00003	Heater (13 kW) (480 V.) (Before S/N 231115487)	1
7	00-749554-00004	Heater (13 kW) (380 V.) (Before S/N 231115487)	1
8	NS-047-86	Stop Nut 1/4-20 Hex (SST)	2
9	00-475967	Bracket - High Limit	1
10	00-294618	Control - Temperature	1
11	00-893047	Tank - Weldment	1
12	FP-015-16	Elbow - Pipe 1/2 x 90 Deg. (Brass)	1
13	00-328994	Probe Assy. - Rinse	1
14	00-328980-00001	Control - Temperature Limiting (AM15VL, AM15VLT, & AM15VLF)	2
15	00-936851	Bracket - High Limit	1
16	FP-015-16	Elbow - Pipe 1/2 x 90 Deg. (Brass)	1
17	00-919824	Tank - Booster Weldment	1
18	00-936862	Bracket - Booster Mounting	1
19	00-936546-00011	Heater (8.5 kW) (208 V.) (Starting S/N 231115487)	1
20	00-936546-00012	Heater (8.5 kW) (240 V.) (Starting S/N 231115487)	1
21	00-936546-00013	Heater (8.5 kW) (480 V.) (Starting S/N 231115487)	1
22	00-936546-00014	Heater (8.5 kW) (308-415 V.) (Starting S/N 231115487)	1
23	NS-014-01	Nut 1/4-20 Hex (Brass)	6
24	NS-036-19	Stop Nut 5/16-18 Hex Special (SST)	1
25	WS-017-01	Washer 0.328 x 0.875 x 0.062	1
26	SC-041-11	Cap Screw 5/16-18 x 3/4 Hex Hd. (SST)	1
27	00-936852	Bracket - Booster Support	1
28	00-749555	Gasket (13 kW) (Electric Heater)	1
29	00-271123	Protector - High Limit	1
30	00-519504	Thermo Joint Compound (2 Oz.)	0

35	00-941119	Shroud - Front
36	00-941176	Box - Light
37	00-941175-00003	Light - Indicator Amber
38	00-941283	Resistor

PARTS NOT ILLUSTRATED

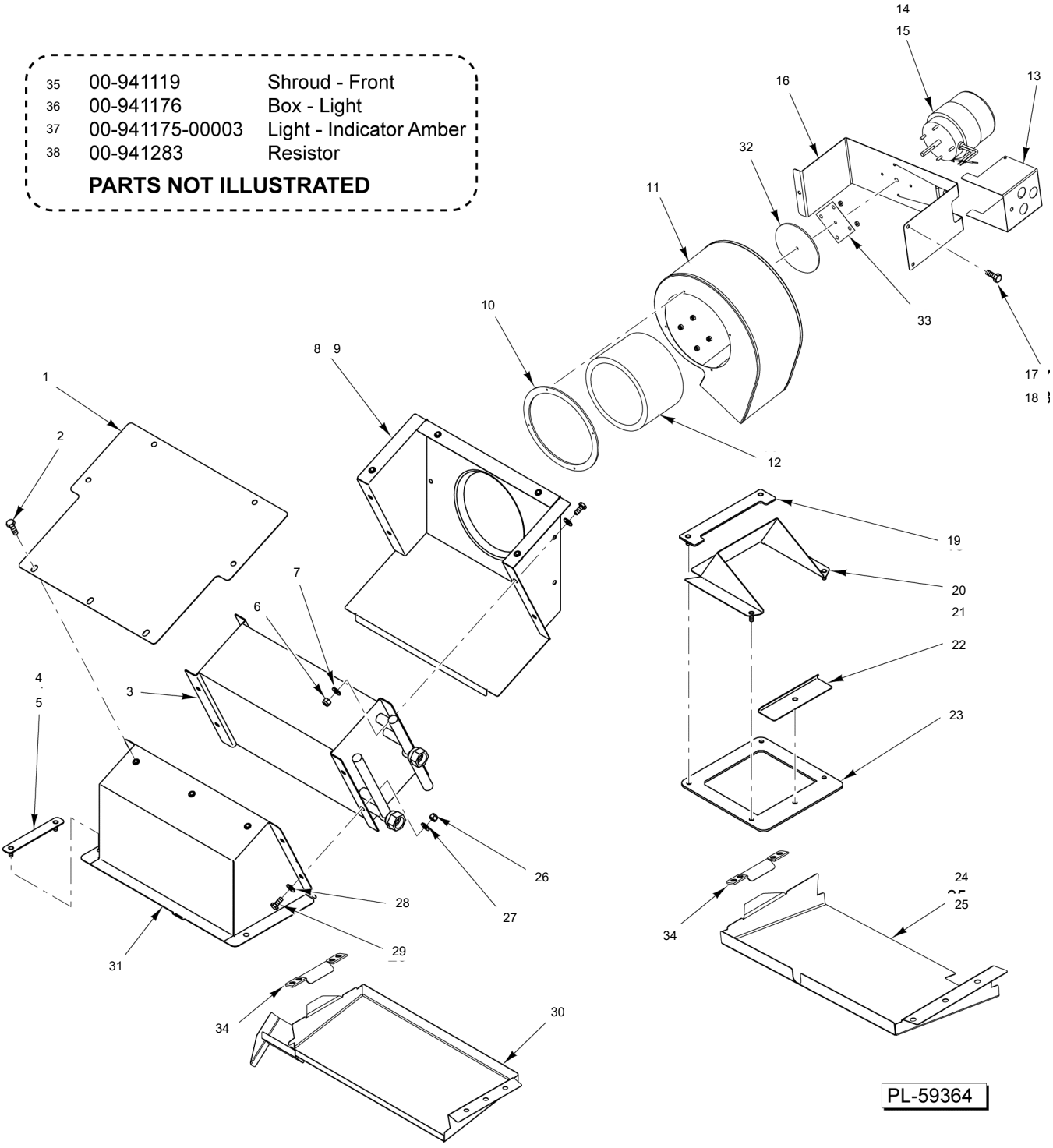

STEAM CONDENSER

STEAM CONDENSER

ILLUS.	PART NO.	NAME OF PART	AMT.
PL-7026			
1	00-941160	Plate - Ventless Top	1
2	SC-041-05	Cap Screw 1/4-20 x 5/8 Hex Hd. (SST)	7
3	00-941113	Coil - Steam Condensing	1
4	00-941188	Bracket - Intake Plenum	1
5	NS-047-82	Stop Nut 1/4-20 Hex (SST)	2
6	NS-047-82	Stop Nut 1/4-20 Hex (SST)	0
7	WS-017-06	Washer .281 x .625 x .062 (SST)	0
8	00-941159	Mount - Ventless Fan To Coil	1
9	00-526454-00002	Foam Tape	0
10	00-941197-00001	Gasket - Fan Intake	1
11	00-941200-00002	Housing - Fan	1
12	00-941200-00003	Impeller - Fan	1
13	00-941183	Cover - Fan Motor	1
14	00-941187	Motor - Fan	2
15	00-941197-00002	Gasket - Motor	1
16	00-941184	Mount - Fan Motor	1
17	SC-041-05	Cap Screw 1/4-20 x 5/8 Hex Hd. (SST)	3
18	NS-047-82	Stop Nut 1/4-20 Hex (SST)	3
19	00-941232	Plate - Corner Reinforcement	1
20	00-941182	Seal - Fan Mount	1
21	NS-047-82	Stop Nut 1/4-20 Hex (SST)	5
22	00-941189	Mount - Adjusting Fan	1
23	00-941229	Gasket - Exhaust Fan	1
24	00-941354	Deflector - Exhaust	1
25	NS-047-82	Stop Nut 1/4-20 Hex (SST)	8
26	NS-047-82	Stop Nut 1/4-20 Hex (SST)	4
27	WS-017-06	Washer .281 x .625 x .062 (SST)	4
28	WS-017-06	Washer .281 x .625 x .062 (SST)	4
29	SC-041-05	Cap Screw 1/4-20 x 5/8 Hex Hd. (SST)	4
30	00-941443	Deflector - Ventless Intake Assy.	1
31	00-941163	Plenum - Ventless Intake	1
32	00-941197-00002	Gasket - Motor	1
33	00-948690	Seal - Fan Shaft	1
34	00-941349	Bracket - Baffle	2
35	00-941119	Shroud - Front	1
36	00-941176	Box - Light	1
37	00-941175-00003	Light - Indicator Amber	1
38	00-941283	Resistor	1

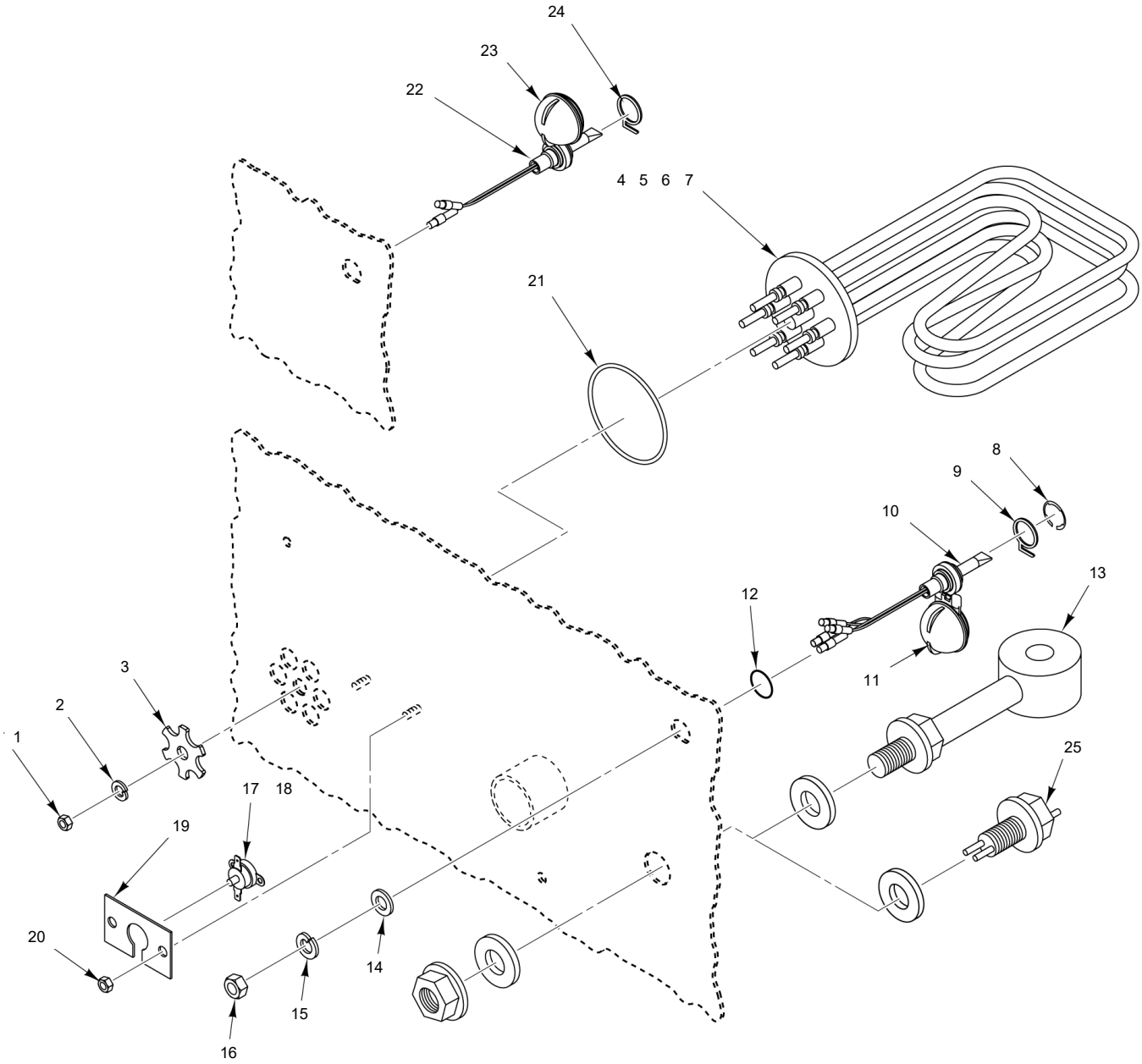

26 00-519504 Thermo Joint Compound

PART NOT ILLUSTRATED

PL-57405

LOW WATER PROTECTION AND ELECTRIC HEAT

LOW WATER PROTECTION AND ELECTRIC HEAT

ILLUS.	PART NO.	NAME OF PART	AMT.
PL-6025			
1	NS-014-15	Nut 3/8-16 (Brass) (Supplied With Heater)	1
2	WL-006-27	Lockwasher 3/8 Helical (SST)	1
3	00-749798	Plate - Electric Heat	1
4	00-893120-00011	Element - Heater (208 - 240 V.)	1
5	00-893120-00002	Element - Heater (480 V.)	1
6	00-893120-00013	Element - Heater (380 V.)	1
7	00-893120-00014	Element - Heater (200/208 V.)	1
8	RR-010-13	Retaining Ring	1
9	00-112467	Retainer - Float	1
10	00-289121	Probe & Switch Assy. (4-Wire) (Temperature & Water Level) (Incl. Items 8, 9, 11, & 12)	1
11	00-122674	Float Assy.	1
12	00-067500-00072	O-Ring	1
13	00-562205	Inductive Probe (Detergent) (Incls. Gasket & Nut) (AM15SVLT) (Before S/N 231208914)	1
14	WS-010-40	Washer - Thrust	1
15	WL-014-31	Lockwasher 1/2 External Shakeproof (SST)	1
16	NS-018-28	Jam Nut 1/2-20 Hex (SST)	1
17	00-294618	Temperature Control Kit (Incls. Spacers & Nuts) (Use With Electric Heat)	1
18	00-942185	Protector - High Limit (AM15SCB)	1
19	00-475967	Bracket - High Limit	1
20	NS-031-16	Stop Nut 10-24 Hex Elastic (SST)	2
21	00-067500-00034	O-Ring	1
22	00-913135-00225	Switch & Probe Assy. (2-Wire) (AM15SVLT & AM15SCB) (Starting S/N 231197040) (Incl. Items 23 & 24)	1
23	00-122674	Float Assy. (AM15SVLT & AM15SCB) (Starting S/N 231197040)	1
24	00-112467	Retainer - Float (AM15SVLT & AM15SCB) (Starting S/N 231197040)	1
25	00-975322-00010	Probe - P120S (Detergent) (Starting S/N 231208914)	1
26	00-519504	Thermo Joint Compound (2 Oz.)	0

(EXCEPT AM15SCB WITH DRAIN PUMP)

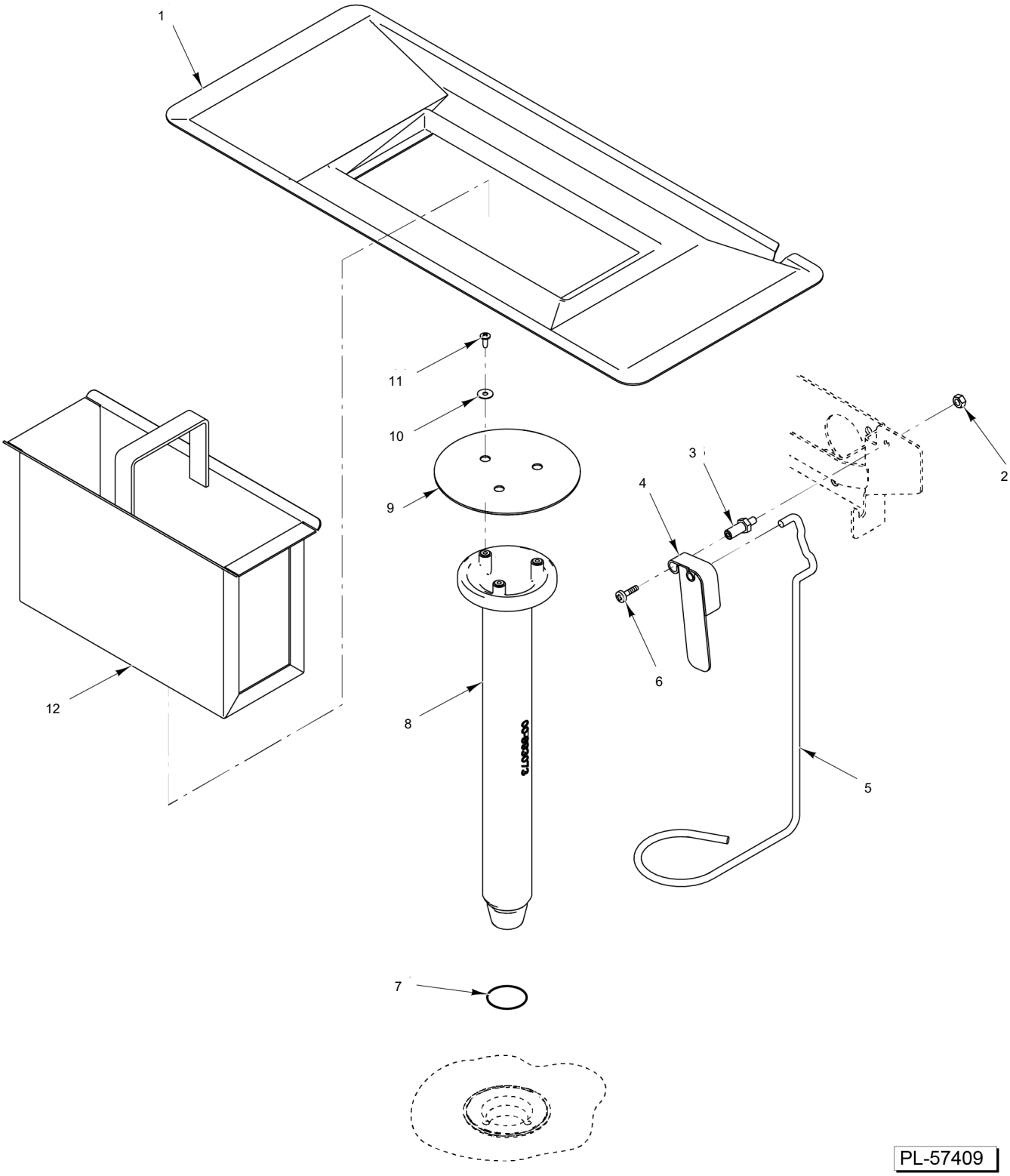

DRAIN UNIT
(EXCEPT AM15SVLT UNITS STARTING S/N 231197040)

DRAIN UNIT
(EXCEPT AM15SVLT UNITS STARTING S/N 231197040)

ILLUS.	PART NO.	NAME OF PART	AMT.
PL-6029			
1	00-893045	Strainer Pan	1
2	NS-047-82	Stop Nut 1/4-20 Hex (SST)	1
3	00-119116	Axle - Drain Lever	1
4	00-893091	Drain Lever Assy.	1
5	00-893095	Drain - Lift	1
6	SC-066-06	Mach. Screw 10-24 x 1/2 Phil. Truss Hd. (SST)	1
7	00-067500-00120	O-Ring	1
8	00-893071	Drain Tube Assy. (Incls. Items 9 thru 11)	1
9	00-893072	Cover - Standpipe	1
10	WS-019-33	Washer (SST)	3
11	SD-038-84	Self-Tapping Screw 10-24 x 1/2 Phil. Truss Hd., Type F (SST)	3
12	00-118999	Strainer Basket Assy.	1

(AM15SVLT STARTING S/N 231197040)

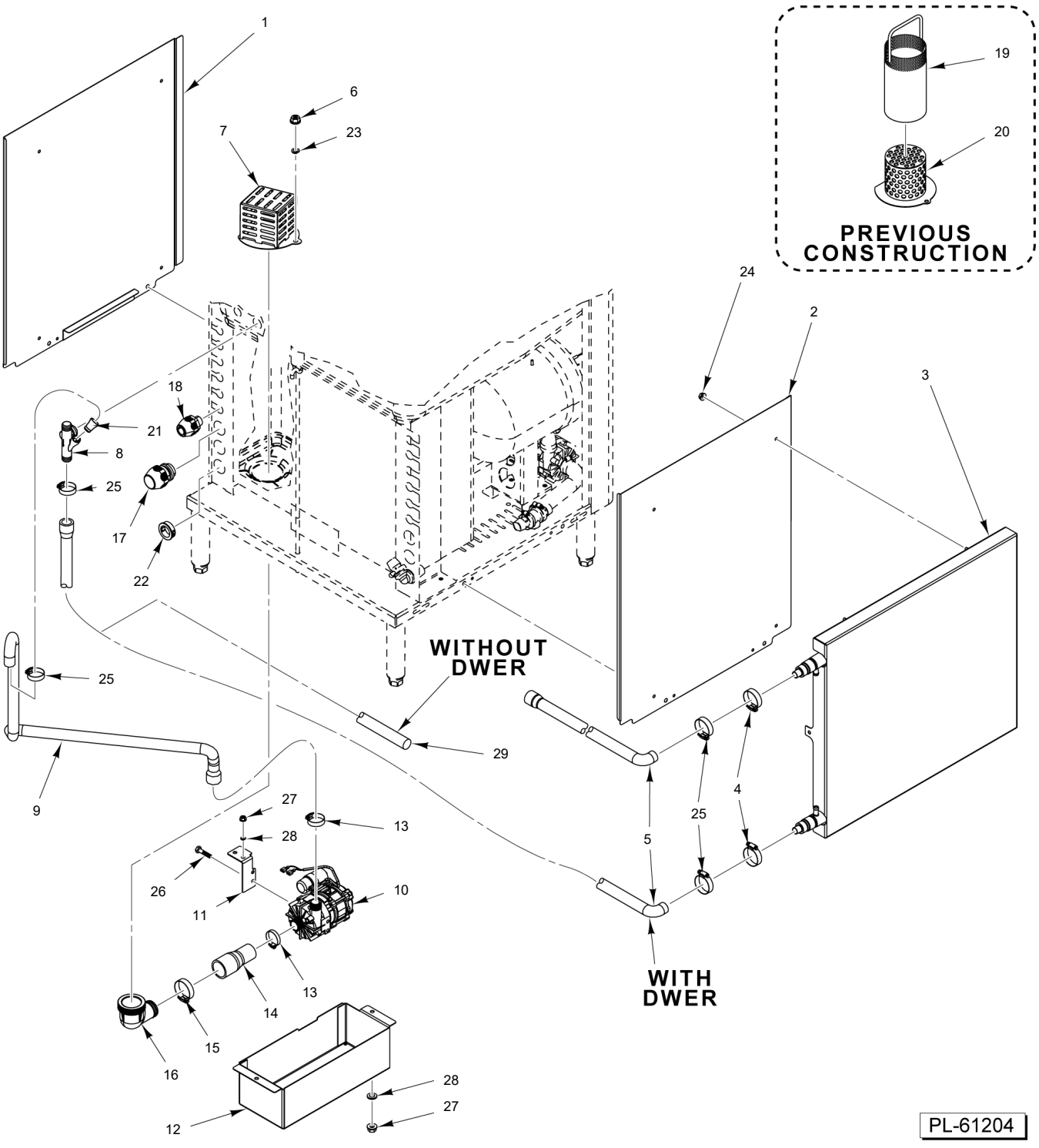

DRAIN PUMP AND DWER
(AM15SCB OPTION)

DRAIN PUMP AND DWER
(AM15SCB OPTION)

ILLUS.	PART NO.	NAME OF PART	AMT.
PL-30378			
1	00-893042-00003	Panel - Cover (Right Side)	1
2	00-893018	Panel - Cover (Left Side)	1
3	00-975260-00003	DWER	1
4	00-521738	Clamp - Hose #12, .562 Wide Band, 300 SST .688 - 1.250	4
5	00-562204	Hose (W/ DWER)	2
6	NS-036-19	Stop Nut 5/16-18 Hex Special (SST)	2
7	00-562247	Strainer Assy.	1
8	01-240142-00001	Anti-Siphon	1
9	00-949440	Hose - Drain	1
10	00-913102-00277	Kit - Drain Pump	1
11	00-562142-00001	Bracket - Mounting	1
12	00-562141	Cover - Drain Pump	1
13	00-557627	Clamp - Hose	2
14	00-562139	Reducer - Hose	1
15	00-538412	Clamp - Hose	1
16	01-650163	Kit - Drain Pump (Incls. Item 13)	1
17	FE-024-59	Connector Straight (Non-Metallic) Sealtite (1 Male)	1
18	FE-024-58	Connector Straight (Non-Metallic) Sealtite (3/4 Male Thd. x 3/4 Flex. Cnd.)	1
19	00-562185	Strainer Assy.	1
20	00-562184	Strainer Assy.	1
21	00-775531-00001	Plug	1
22	FE-022-95	Bushing - Snap	1
23	WL-006-23	Lockwasher 5/16 Helical (SST)	2
24	NS-047-82	Stop Nut 1/4-20 Hex (SST)	4
25	00-558230	Clamp - Hose #10	4
26	SC-120-48	Cap Screw M6 x 1.0 x 18mm Hex Hd. (SST)	2
27	NS-036-19	Stop Nut 5/16-18 Hex Special (SST)	4
28	WL-006-23	Lockwasher 5/16 Helical (SST)	4
29	00-562493	Hose (W/O DWER)	0

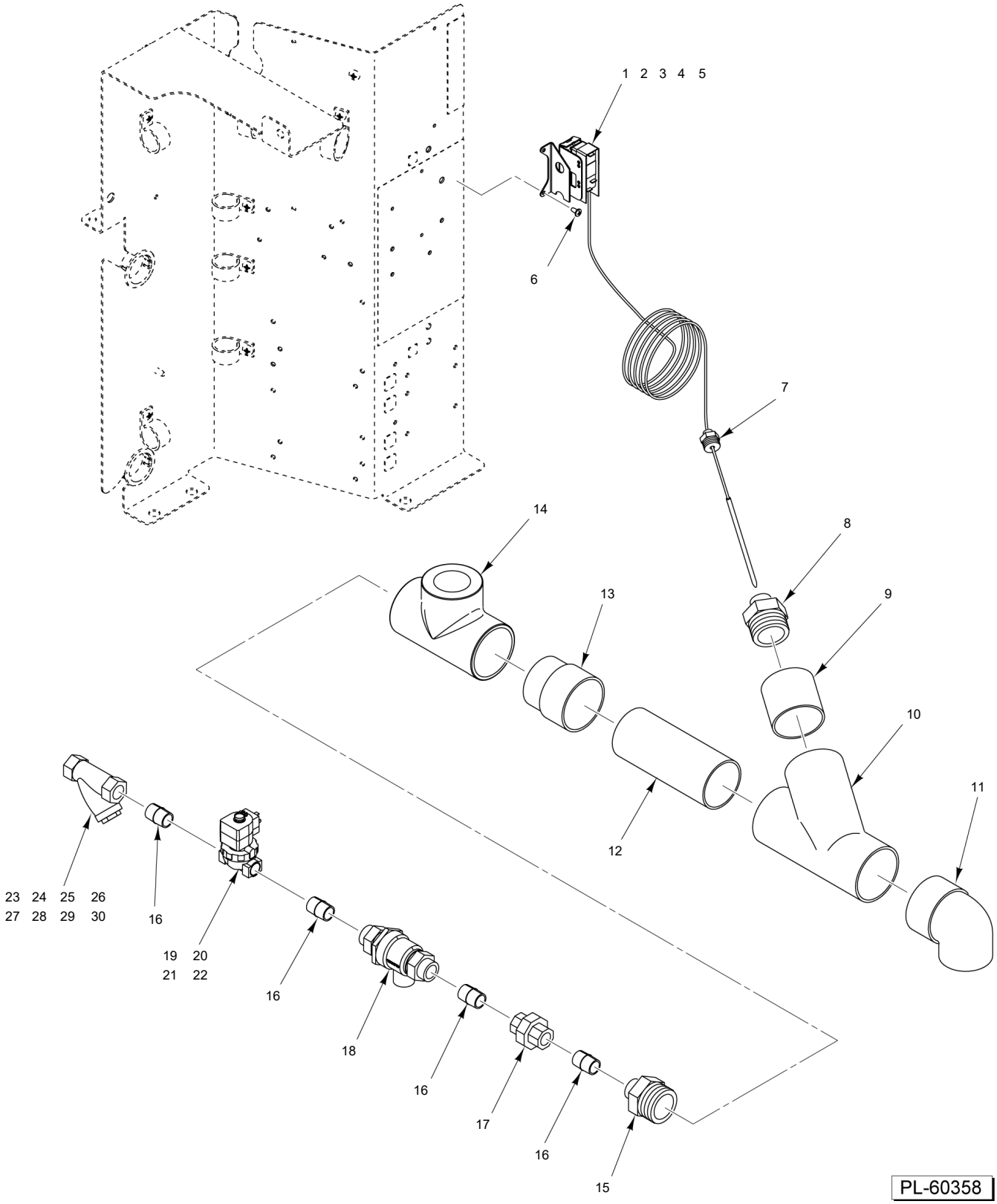

DRAIN WATER TEMPERING

DRAIN WATER TEMPERING

ILLUS.	PART NO.	NAME OF PART	AMT.
PL-23271			
1	00-294681-025-3	Thermostat - Drain (120F)	1
2	00-936332-00001	Wire (Transformer to Thermostat)	1
3	00-083376	Wire Tie	0
4	00-936293-00001	Cable Assy. (Asco)	1
5	00-893126-00004	Cable Assy. (Parker)	1
6	SD-008-18	Self-Tapping Screw 8-18 x 3/8 Phil. Bndg. Hd., Type B	2
7	FP-077-44	Bushing - Pipe 1 to 3/8	1
8	FP-091-04	Adapter 1-1/2 CPVC to 1 FPT	1
9	00-936260-00001	Pipe 1-1/2 x 6 (CPVC)	1
10	FP-091-06	Y-Fitting 1-1/2 (CPVC)	1
11	FP-091-05	Elbow 1-1/2 x 90 Deg. (CPVC)	1
12	00-936260-00002	Pipe 1-1/2 x 2-1/2 (CPVC)	1
13	00-893860	Adapter - Male 1-1/2 (CPVC)	1
14	FP-091-03	Tee 1-1/2 x 1-1/2 x 1-1/2 (CPVC)	1
15	FP-027-45	Adapter 1-1/2 Brass to 1/2 FPT	1
16	FP-040-42	Pipe 1/2 x 1-1/8 TBE (Brass)	4
17	FP-022-12	Union - Pipe (Brass)	1
18	00-223472	Backflow Preventer	1
19	00-936283	Coil - Solenoid Valve (120 V.) (Asco)	1
20	00-892132	Coil - Solenoid Valve (120 V.) (Parker)	1
21	00-913102-00531	Kit - Solenoid Valve 1/2" (Asco)	1
22	00-893100-00001	Solenoid Valve (1/2) (120 V.) (Parker)	1
23	00-270258	Strainer - Line (1/2) (Brass) (Kitz) (Incls. Items 24, 25, & 26) (Alternate to Item 27)	1
24	00-270259	Plug - Branch	1
25	00-270260	Screen - Strainer (1/2 In.)	1
26	00-270261	Gasket	1
27	00-892921	Strainer - Line (1/2) (Brass) (Conbraco) (Incls. Items 28, 29, & 30) (Alternate to Item 23)	1
28	00-892922-00001	Cap	1
29	00-892922-00002	Gasket	1
30	00-892922-00003	Screen	1

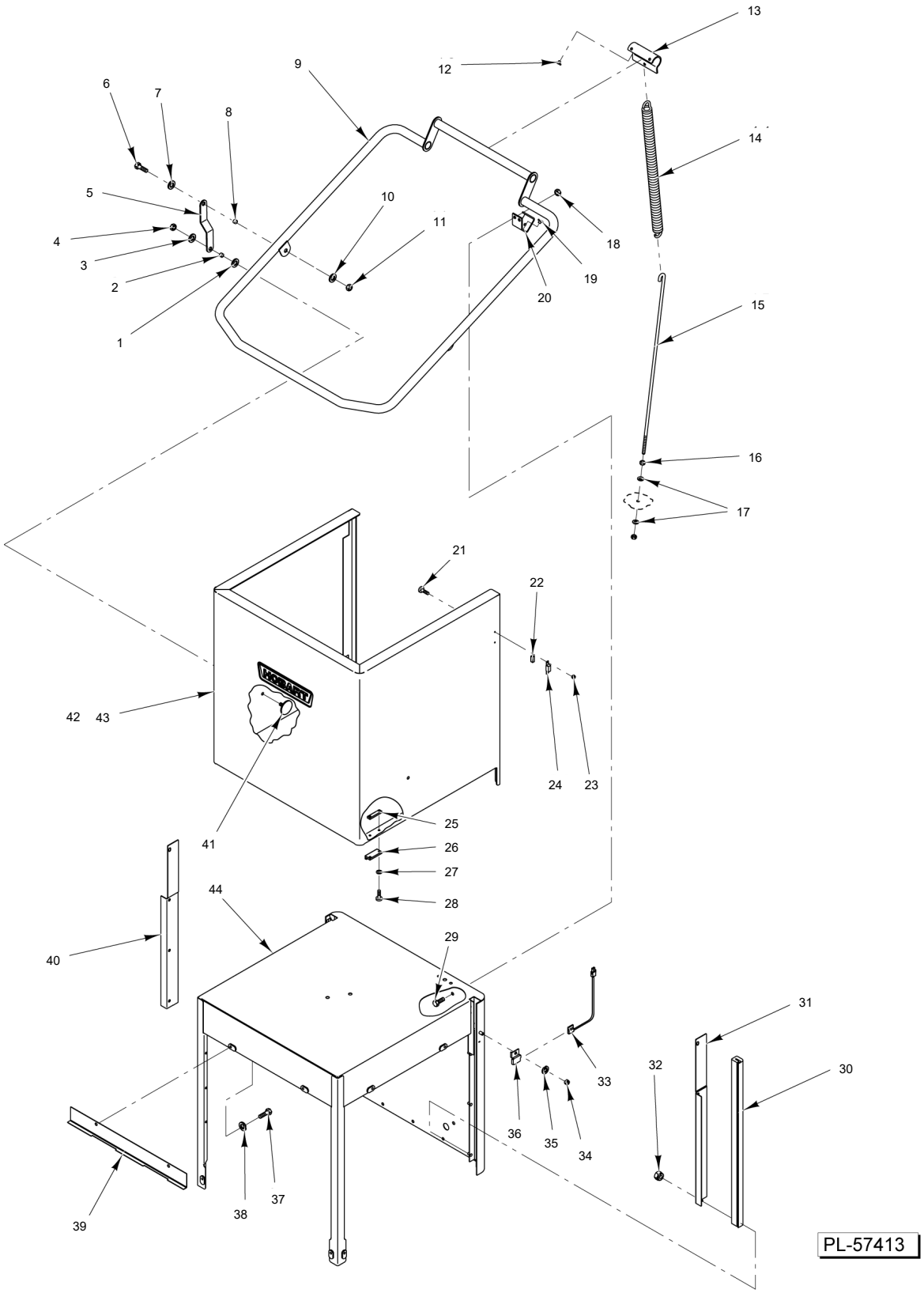

DOOR ASSEMBLY
(AM15, AM15VL, AM15SCB, & AM15SVL)

DOOR ASSEMBLY
(AM15, AM15VL, AM15SCB, & AM15SVL)

ILLUS.	PART NO.	NAME OF PART	AMT.
PL-6033			
1	WS-017-01	Washer 0.328 x 0.875 x 0.062	2
2	00-893014-00002	Spacer - Door Link (Lower)	2
3	WS-017-01	Washer 0.328 x 0.875 x 0.062	2
4	NS-036-19	Stop Nut 5/16-18 Hex Special (SST)	2
5	00-893252	Link - Door Handle	2
6	SC-041-12	Cap Screw 5/16-18 x 7/8 Hex Hd. (SST)	2
7	WS-017-01	Washer 0.328 x 0.875 x 0.062	2
8	00-893014-00001	Spacer Door Link (Upper)	2
9	00-893051	Handle - Weldment	1
10	WS-017-01	Washer 0.328 x 0.875 x 0.062	2
11	NS-036-19	Stop Nut 5/16-18 Hex Special (SST)	2
12	00-119055	Button - Bearing	4
13	00-893011	Hanger - Counterbalance (Spring)	1
14	00-893012	Spring - Extension (Door)	1
15	00-893013	Hook - Spring	1
16	NS-015-11	Nut 5/16-18 Hex (SST)	3
17	WS-017-01	Washer 0.328 x 0.875 x 0.062	2
18	NS-036-19	Stop Nut 5/16-18 Hex Special (SST)	4
19	00-119055	Button - Bearing	4
20	00-893224	Support - Handle	2
21	SC-066-01	Mach. Screw 6-32 x 1/4 Phil. Truss Hd. (SST)	2
22	00-111941	Magnet	1
23	NS-031-50	Stop Nut 6-32 Hex (SST)	2
24	00-893111	Magnet - Mount	1
25	00-893826	Door Guide Mount	2
26	00-893801	Spacer - Door Guide	2
27	WS-023-01	Washer (SST)	4
28	SC-066-02	Mach. Screw 6-32 x 3/8 Phil. Truss Hd. (SST)	4
29	SC-041-09	Cap Screw 5/16-18 x 1/2 Hex Hd. (SST)	4
30	00-918458-00001	Guide - Door	2
31	00-893201-00002	Cover - Door Guide (RH)	1
32	NS-047-82	Stop Nut 1/4-20 Hex (SST)	4
33	00-473109-00004	Switch Assy. - Door	1
34	NS-015-11	Nut 5/16-18 Hex (SST)	1
35	WL-006-23	Lockwasher 5/16 Helical (SST)	1
36	00-893853	Bracket - Reed Switch Mounting	1
37	SC-041-11	Cap Screw 5/16-18 x 3/4 Hex Hd. (SST)	6
38	WL-006-23	Lockwasher 5/16 Helical (SST)	6
39	00-893015	Stop - Door	3
40	00-893201	Cover - Door Guide (LH)	1
41	00-893226	Stiffener - Door Plate	2
42	00-893202-00002	Door Wrap (Without Studs, All Standard Models)	1
43	00-893202-00003	Door Wrap (AM15VL and AM15SVL Only) (With Door Lock Studs)	1
44	00-893196	Chamber - Weldment (Upper) (Standard Height)	1

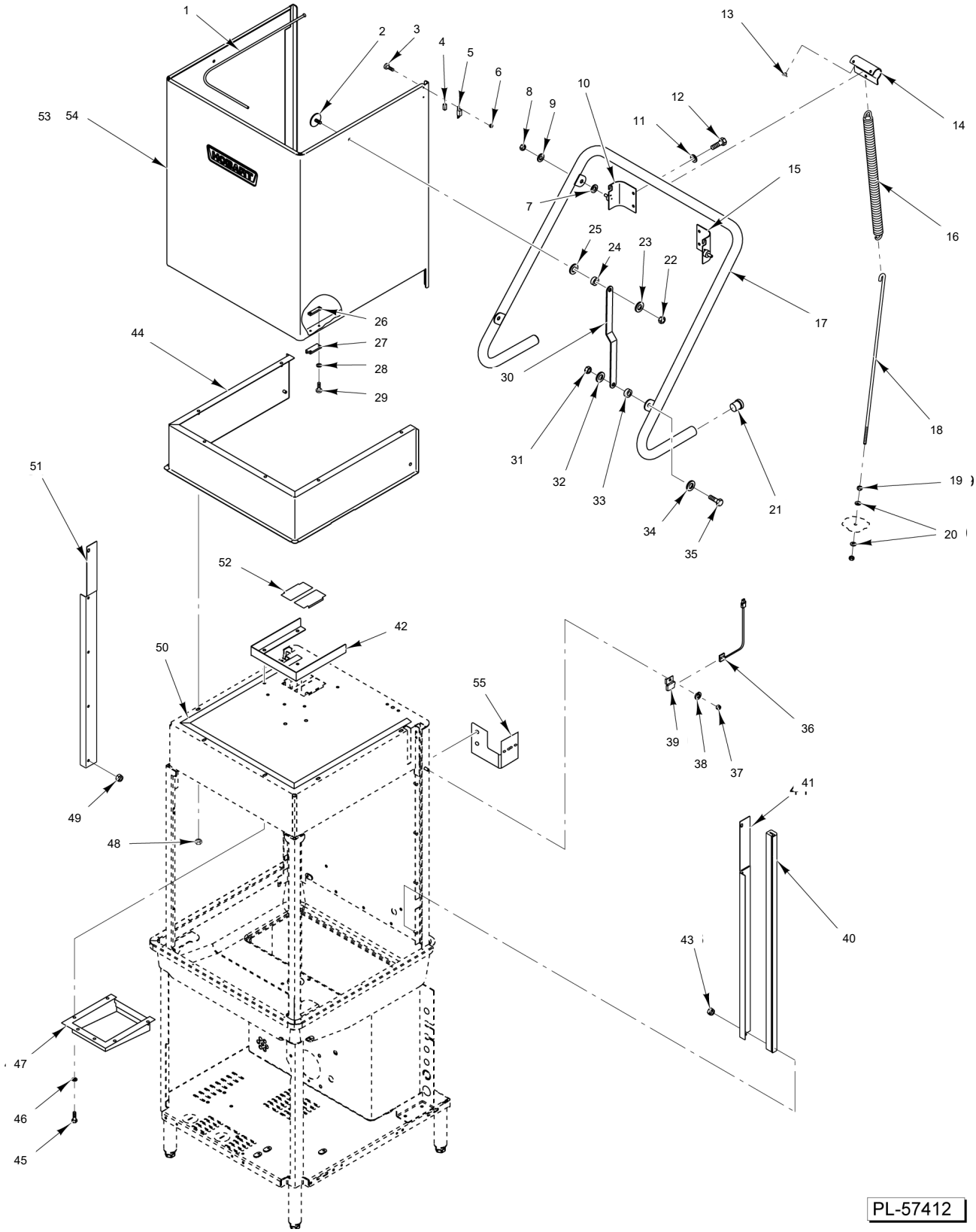

DOOR ASSEMBLY
(AM15T, AM15F, AM15VLT, AM15VLF, & AM15SVLT)

DOOR ASSEMBLY
(AM15T, AM15F, AM15VLT, AM15VLF, & AM15SVLT)

ILLUS. PL-6032	PART NO.	NAME OF PART	AMT.
1	00-893834	Seal - Top Cover (Tall)	3
2	00-893226	Stiffener - Door Plate	2
3	SC-066-01	Mach. Screw 6-32 x 1/4 Phil. Truss Hd. (SST)	4
4	00-111941	Magnet	1
5	00-893111	Magnet - Mount	1
6	NS-031-50	Stop Nut 6-32 Hex (SST)	2
7	WS-017-01	Washer 0.328 x 0.875 x 0.062	2
8	NS-036-19	Stop Nut 5/16-18 Hex Special (SST)	2
9	WS-017-01	Washer 0.328 x 0.875 x 0.062	2
10	00-893486-00002	Bracket - Handle (LH)	1
11	WL-006-23	Lockwasher 5/16 Helical (SST)	4
12	SC-041-09	Cap Screw 5/16-18 x 1/2 Hex Hd. (SST)	4
13	00-119055	Button - Bearing	4
14	00-893500	Hanger - Counterbalance (Spring)	1
15	00-893486-00001	Bracket - Handle (RH)	1
16	00-893498	Spring - Extension (Door)	1
17	00-893484	Handle - Weldment	1
18	00-893013-00002	Hook - Spring	1
19	NS-015-11	Nut 5/16-18 Hex (SST)	3
20	WS-017-01	Washer 0.328 x 0.875 x 0.062	2
21	00-918049	Plug - Lift Arm	2
22	NS-036-19	Stop Nut 5/16-18 Hex Special (SST)	2
23	WS-017-01	Washer 0.328 x 0.875 x 0.062	2
24	00-893014-00001	Spacer Door Link (Upper)	2
25	WS-017-01	Washer 0.328 x 0.875 x 0.062	2
26	00-893826	Door Guide Mount	2
27	00-893801	Spacer - Door Guide	2
28	WS-023-01	Washer (SST)	4
29	SC-066-02	Mach. Screw 6-32 x 3/8 Phil. Truss Hd. (SST)	4
30	00-893487	Link - Door Handle	2
31	NS-036-19	Stop Nut 5/16-18 Hex Special (SST)	2
32	WS-017-01	Washer 0.328 x 0.875 x 0.062	2
33	00-893014-00003	Spacer - Door Link	2
34	WS-017-01	Washer 0.328 x 0.875 x 0.062	2
35	SC-041-12	Cap Screw 5/16-18 x 7/8 Hex Hd. (SST)	2
36	00-473109-00004	Switch Assy. - Door	1
37	NS-015-11	Nut 5/16-18 Hex (SST)	1
38	WL-006-23	Lockwasher 5/16 Helical (SST)	1
39	00-893853	Bracket - Reed Switch Mounting	1
40	00-918458-00004	Guide - Door (Tall)	2
41	00-893314-00002	Cover - Door Guide (RH)	1
42	00-893946	Vent - Deflector (AM15T & AM15F)	1
43	NS-047-82	Stop Nut 1/4-20 Hex (SST)	5
44	00-893320	Cover Assy. - Top Chamber	1
45	SC-041-09	Cap Screw 5/16-18 x 1/2 Hex Hd. (SST)	6
46	WL-006-23	Lockwasher 5/16 Helical (SST)	6
47	00-918166	Vent Assy. - Inside Deflector (AM15T & AM15F)	1
48	NS-047-82	Stop Nut 1/4-20 Hex (SST)	6
49	NS-047-82	Stop Nut 1/4-20 Hex (SST)	5
50	00-526408	Tape - Foam	0
51	00-893314	Cover - Door Guide (LH)	1
52	00-893956	Cap - Vent (AM15T & AM15F)	2
53	00-893326-00002	Door Wrap (Without Studs, All Tall Models)	1
54	00-893326-00003	Door, Wrap, WLDMT, (TALL) (AM15VLT and AM15SVLT Only) (With Door Lock Studs)	1
55	00-941135	Tubing - Bracket (AM15VLT Only)	1

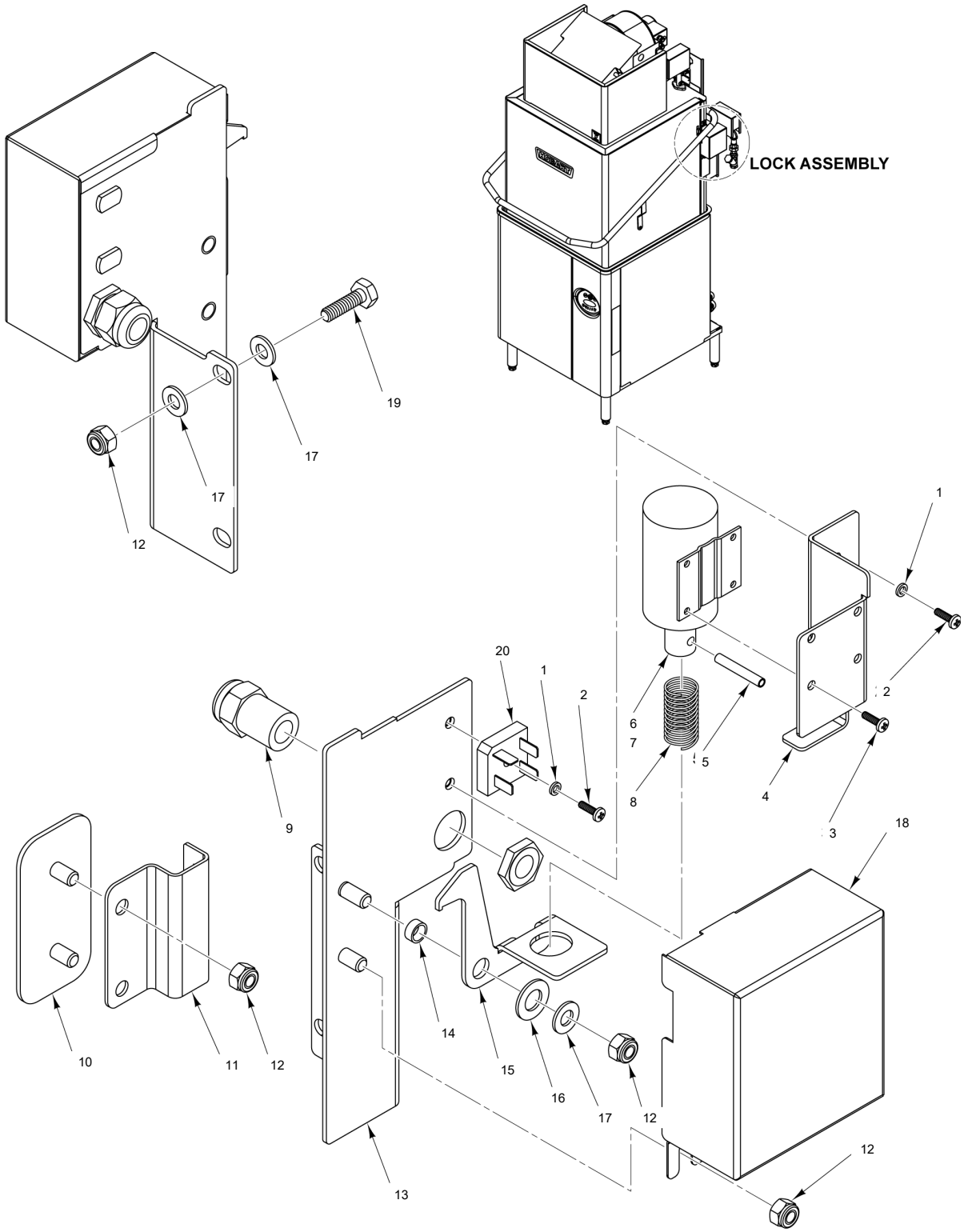

21 00-941246-00002 Door Lock Assy.

PARTS NOT ILLUSTRATED

PL-61160

DOOR LOCK
(AM15VL, AM15VLT, AM15SVL, AM15SVLT, & AM15SCBVL)

DOOR LOCK
(AM15VL, AM15VLT, AM15SVL, AM15SVLT, & AM15SCBVL)

ILLUS.	PART NO.	NAME OF PART	AMT.
PL-27216			
1	WL-006-07	Lockwasher #10 Helical (SST)	2
2	SC-080-12	Mach. Screw 10-24 x 5/8 Phil. Fil. Hd. (SST)	2
3	SD-008-18	Self-Tapping Screw 8-18 x 3/8 Phil. Bndg. Hd., Type B	4
4	00-562312	Bracket - Solenoid	1
5	RP-006-49	Pin, Roll .188 x 1.250	1
6	00-941290	Solenoid 125 VDC (Previous Construction)	1
7	00-949046-00001	Solenoid (110 VDC, 3/4 In. Travel) (Current Construction)	1
8	00-941249	Spring (Current Construction)	1
9	FE-022-84	Connector - Strain Relief	1
10	00-941247	Plate - Mount, Receiver	1
11	00-941244	Receiver - Door	1
12	NS-036-19	Stop Nut 5/16-18 Hex Special (SST)	6
13	00-941243	Plate - Solenoid	1
14	00-893014-00002	Spacer - Door Link (Lower)	1
15	00-941242	Lock	1
16	WS-021-01	Washer (SST)	1
17	WS-005-32	Washer (SST)	0
18	00-941248	Cover - Receiver, Door	1
19	SC-041-11	Cap Screw 5/16-18 x 3/4 Hex Hd. (SST)	2
20	00-473660	Rectifier	1
21	00-941246-00002	Door Lock Assy.	1

(AM15VL, AM15VLT, AM15SVL, AM15SVLT, & AM15SCBVL)

Item Number	Description
1	Cable
2	Transformer
3	Fuse
4	Lead Wire Assembly
5	Lead Wire Assembly
6	Lead Wire Assembly
7	Lead Wire Assembly
8	Connector, Wire Terminal Block – 3 Connector
9	Connector, Wire Terminal Block– 2 Connector
10	Warning Label - Fuse

AI4041

DOOR LOCK - ELECTRICAL

DOOR LOCK - ELECTRICAL

ILLUS.	PART NO.	NAME OF PART	AMT.
PL-27217			
1	00-941295	Cable Assy. - Door Lock	1
2	00-294500-046-1	Transformer (150 VA, 50/60 Hz.)	1
3	FE-022-29	Fuse (250 V.) (1 Amp.)	1
4	00-941296-00001	Assembly, Lead Wire	1
5	00-941296-00002	Assembly, Lead Wire	1
6	00-941296-0003	Assembly, Lead Wire	1
7	00-941296-0004	Assembly, Lead Wire	1
8	00-557975	Connector - Wire Terminal Block (3 Connector)	3
9	00-557976	Connector - Wire Terminal Block (2 Connector)	1
10	0F-941275	Warning Label, Fuse	1

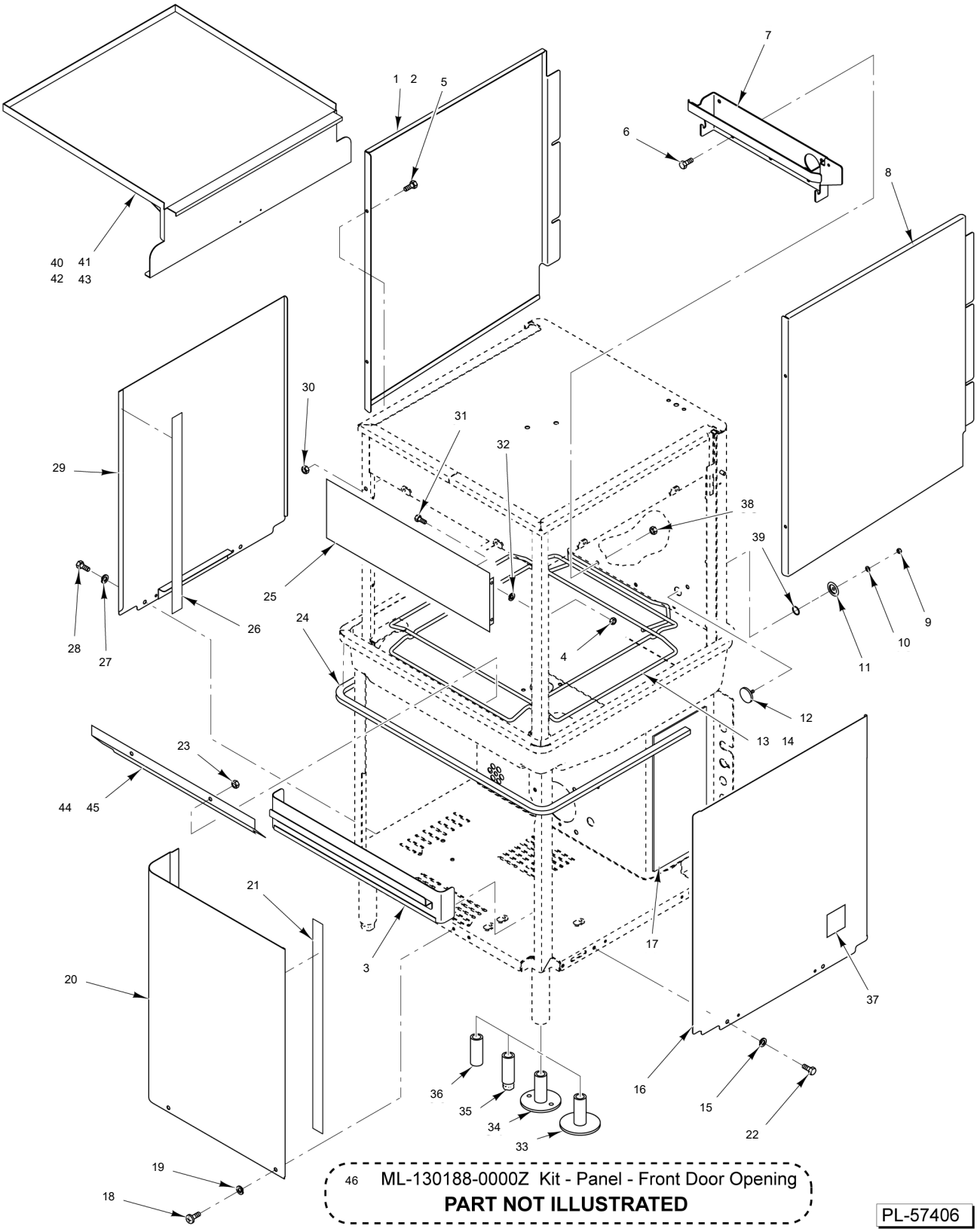

PANELS AND RACK SUPPORT

PANELS AND RACK SUPPORT

ILLUS.	PART NO.	NAME OF PART	AMT.
PL-6026			
1	00-893843	Kit - Splash Panel (AM15 & AM15VL)	1
2	00-893119-00002	Kit - Splash Panel (AM15T, AM15F, AM15VLT, & AM15VLF)	1
3	00-936710	Shield - Splash	1
4	NS-047-82	Stop Nut 1/4-20 Hex (SST)	4
5	SC-059-29	Cap Screw 1/4-20 x 1/2 Hex Socket Hd. (SST)	2
6	SC-041-10	Cap Screw 5/16-18 x 5/8 Hex Hd. (SST)	5
7	00-893798	Rack - Stop Assy.	1
8	00-936234	Panel - Splash (RH) (AM15T, AM15F, AM15VLT, & AM15VLF)	1
9	NS-015-01	Nut 1/4-20 Hex (SST)	1
10	WL-006-17	Lockwasher 1/4 Helical (SST)	1
11	00-119254-00002	Retainer - Cap	1
12	00-119244	Cap & Stud Assy.	1
13	00-893790-00001	Wireform Assy.	1
14	00-975387-00001	Wireform Assy. (AM15SCB)	1
15	WL-006-17	Lockwasher 1/4 Helical (SST)	2
16	00-893042	Panel - Cover (Right Side)	1
17	00-918097	Kit - Foam Installation	0
18	SC-125-15	Mach. Screw 1/4-20 x 1/2 Phil. Truss Hd.	2
19	WL-006-17	Lockwasher 1/4 Helical (SST)	2
20	00-893041	Panel - Cover (Front)	1
21	00-526454-00002	Foam Tape	0
22	SC-041-50	Cap Screw 1/4-20 x 1/2 Hex Hd. (SST)	2
23	NS-036-19	Stop Nut 5/16-18 Hex Special (SST)	2
24	00-893021	Seal - Extrusion	0
25	00-893775	Deflector	1
26	00-526454-00002	Foam Tape	0
27	WL-006-17	Lockwasher 1/4 Helical (SST)	2
28	SC-041-50	Cap Screw 1/4-20 x 1/2 Hex Hd. (SST)	2
29	00-893018	Panel - Cover (Left Side)	1
30	NS-047-82	Stop Nut 1/4-20 Hex (SST)	2
31	SC-059-29	Cap Screw 1/4-20 x 1/2 Hex Socket Hd. (SST)	4
32	WS-017-06	Washer .281 x .625 x .062 (SST)	4
33	00-893122-00002	Foot - Flanged (Without Holes)	4
34	00-893122-00001	Foot - Flanged (With Holes)	4
35	00-893122-00003	Foot - Standard	4
36	00-975316	Leg - Extension (3 In.) (AM15SCB)	4
37	00-438131-061-2	Label - Warning (California)	1
38	NS-036-19	Stop Nut 5/16-18 Hex Special (SST)	5
39	00-067500-00031	O-Ring	1
40	00-975329	Table - Fold Down (AM15SCB)	1
41	00-975357	Latch - Folding Table (AM15SCB)	1
42	00-975481-00001	Rack - Sink Assy (Incls. Item 43)	1
43	00-975481-00004	Rail - Sink, Stop	2
44	00-893069	Baffle - Steam (AM15 & AM15VLT)	1
45	00-562767	Deflector - Splash (AM15SCB)	1
46	ML-130188-0000Z	Kit - Panel - Front Door Opening (AM15 & AM15VL) (Pass thru Machines)	1

21	00-893896-00001	Gas Piping Assy. (NAT)
22	00-893896-00002	Gas Piping Assy. (LP)

PARTS NOT ILLUSTRATED

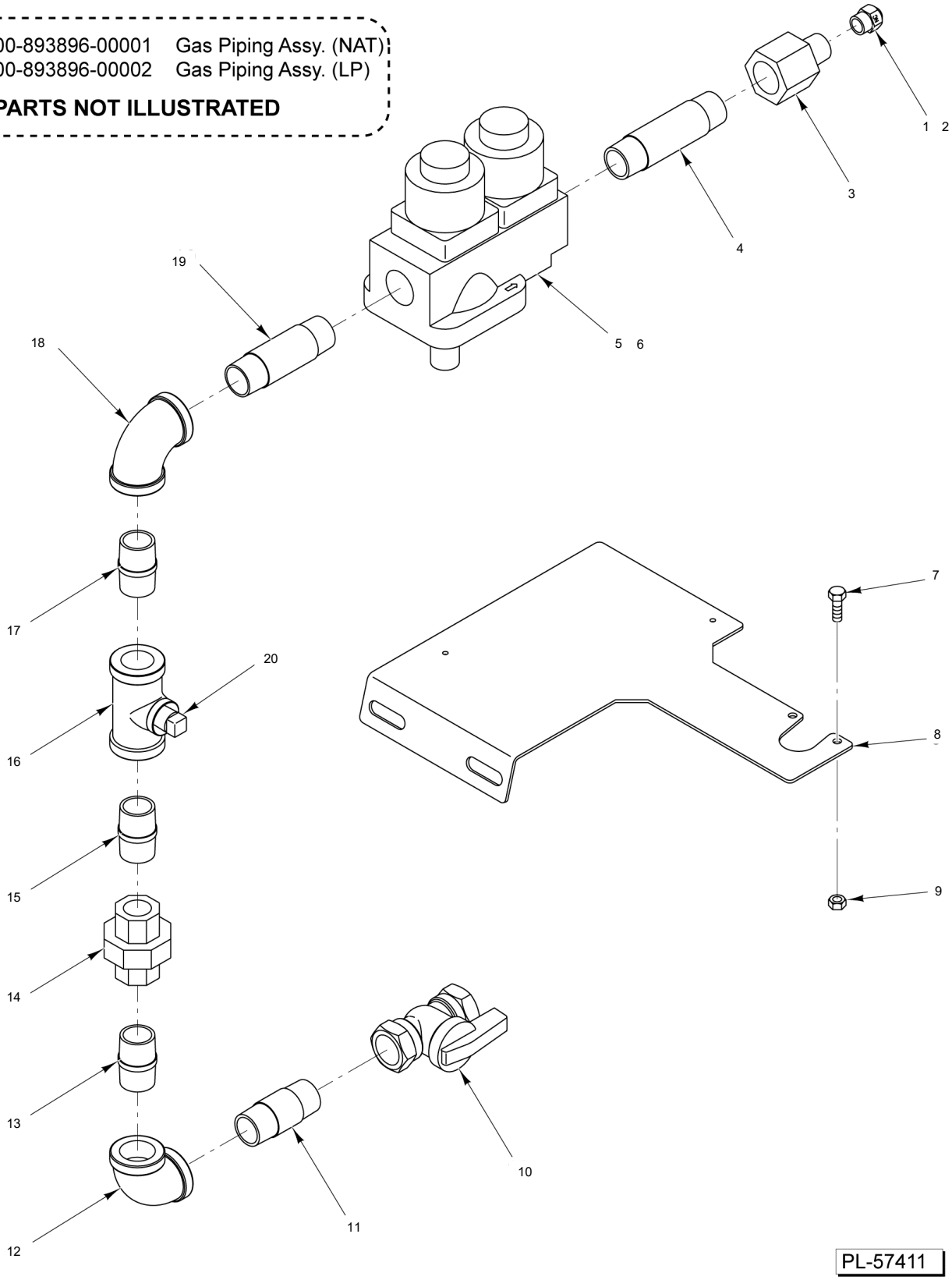

GAS HEAT PIPING

GAS HEAT PIPING

ILLUS.	PART NO.	NAME OF PART	AMT.
PL-6031			
1	00-893149-00001	Orifice (NAT)	1
2	00-893149-00002	Orifice (LP)	1
3	00-893132	Adapter 1/2 to 7/16-20	1
4	FP-059-10	Pipe 1/2 x 3 TBE	1
5	00-328426-00004	Valve - Regulator (NAT)	1
6	00-328426-00005	Valve - Regulator (LP)	1
7	SC-041-10	Cap Screw 5/16-18 x 5/8 Hex Hd. (SST)	3
8	00-893895	Bracket - Ignitor Board	1
9	NS-015-11	Nut 5/16-18 Hex (SST)	3
10	00-291988-00003	Valve - Gas (Shut Off)	1
11	FP-067-04	Pipe 1/2 x 1-7/8 TBE	1
12	FP-013-15	Elbow - Pipe 1/2 x 90 Deg.	1
13	FP-067-04	Pipe 1/2 x 1-7/8 TBE	1
14	FP-022-11	Union - Pipe	1
15	FP-067-04	Pipe 1/2 x 1-7/8 TBE	1
16	FP-084-31	Tee Pipe 1/2 x 1/2 x 1/4	1
17	FP-035-94	Pipe 1/2 x 1-1/2 TBE	1
18	FP-013-15	Elbow - Pipe 1/2 x 90 Deg.	1
19	FP-036-97	Pipe 1/2 x 2-3/4 TBE	1
20	FP-028-06	Pipe Plug 1/4 Sq. Hd.	1
21	00-893896-00001	Gas Piping Assy. (NAT) (Incls. Items 1, 3, 4, 5, & 10 thru 20)	1
22	00-893896-00002	Gas Piping Assy. (LP) (Incls. Items 2, 3, 4, 6, & 10 thru 20)	1

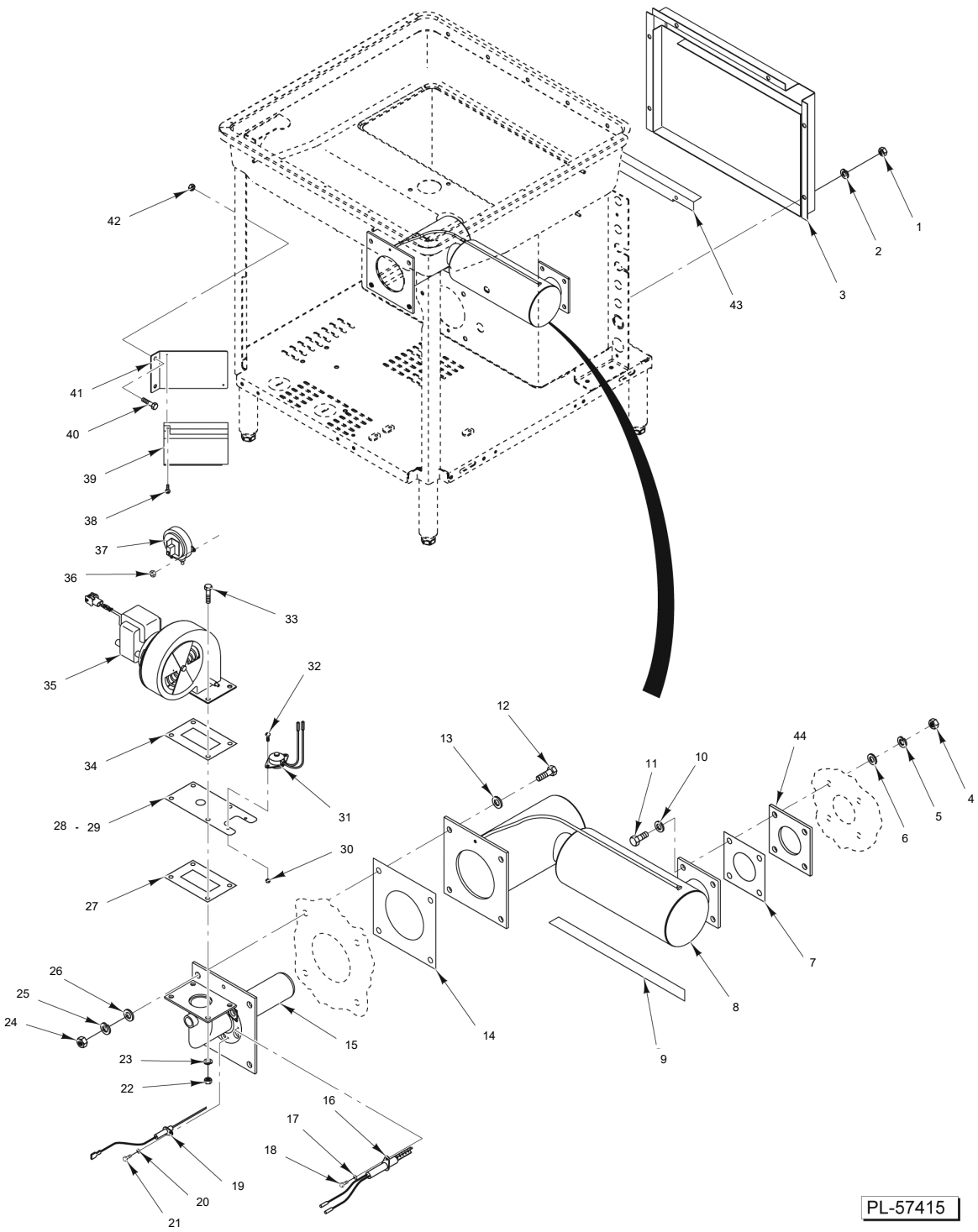

GAS HEAT COMPONENTS

GAS HEAT COMPONENTS

ILLUS.	PART NO.	NAME OF PART	AMT.
PL-6035			
1	NS-031-21	Stop Nut 1/4-20 Hex (SST)	6
2	WL-014-10	Lockwasher 1/4 External Shakeproof (SST)	6
3	00-893890	Shroud - Exhaust	1
4	NS-015-13	Nut 3/8-16 Hex (SST)	4
5	WL-006-28	Lockwasher 3/8 Helical (SST)	4
6	WS-028-22	Washer (SST)	4
7	00-893892	Gasket - Immersion Tube	1
8	00-893879	Tube - Immersion	1
9	00-893900	Turbulator - Immersion Tube	1
10	WS-028-22	Washer (SST)	4
11	SC-041-31	Cap Screw 3/8-16 x 1-1/4 Hex Hd. (SST)	4
12	SC-041-31	Cap Screw 3/8-16 x 1-1/4 Hex Hd. (SST)	4
13	WS-028-22	Washer (SST)	4
14	00-893891	Gasket - Immersion Tube	1
15	00-893897	Burner - Infrared	1
16	00-748571-00002	Ignitor (With Terminals)	1
17	WL-006-02	Lockwasher #8 Helical (SST)	1
18	SC-021-13	Mach. Screw 8-32 x 1/4 Slotted Rd. Hd. (SST)	1
19	00-748572	Electrode Assy.	1
20	WL-006-02	Lockwasher #8 Helical (SST)	1
21	SC-021-13	Mach. Screw 8-32 x 1/4 Slotted Rd. Hd. (SST)	1
22	NS-031-21	Stop Nut 1/4-20 Hex (SST)	4
23	WL-014-10	Lockwasher 1/4 External Shakeproof (SST)	4
24	NS-015-13	Nut 3/8-16 Hex (SST)	4
25	WL-006-28	Lockwasher 3/8 Helical (SST)	4
26	WS-028-22	Washer (SST)	4
27	00-918034	Seal - Blower/Burner	1
28	00-893893-00001	Plate - Reducer (NAT)	1
29	00-948534	Kit - Gas Conversion (Natural to LP)	1
30	NS-031-50	Stop Nut 6-32 Hex (SST)	2
31	00-271123	Protector - High Limit	1
32	SC-021-08	Mach. Screw 6-32 x 3/8 Slotted Rd. Hd. (SST)	2
33	SC-041-05	Cap Screw 1/4-20 x 5/8 Hex Hd. (SST)	4
34	00-918034	Seal - Blower/Burner	1
35	00-893898	Blower - Gas	1
36	NS-031-21	Stop Nut 1/4-20 Hex (SST)	2
37	00-918116-00001	Switch - Air	1
38	SD-038-02	Self-Tapping Screw 6-20 x 5/8 Phil. Pan Hd., Type B	2
39	00-748512	Board - Ignitor (24 VAC)	1
40	SC-041-10	Cap Screw 5/16-18 x 5/8 Hex Hd. (SST)	2
41	00-893895	Bracket - Ignitor Board	1
42	NS-015-11	Nut 5/16-18 Hex (SST)	2
43	00-893887	Baffle - Exhaust	3
44	00-918178	Flange - Exhaust Mounting	1

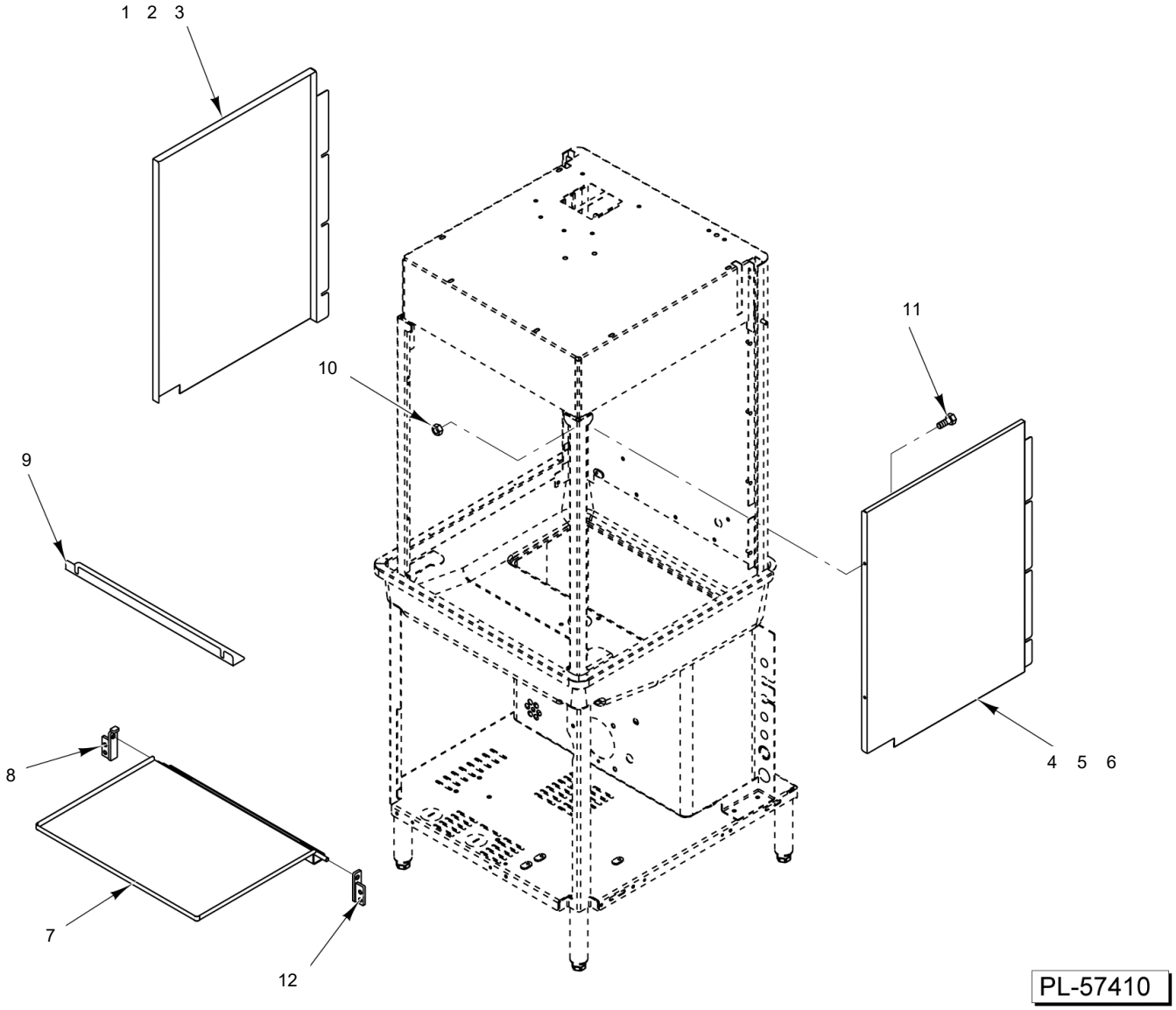

FRONT TRAY

FRONT TRAY

ILLUS.	PART NO.	NAME OF PART	AMT.
PL-6030			
1	00-936235	Panel - Splash (LH) (AM15VLF, AM15VLT, & AM15SVLT)	1
2	00-893096	Panel - Splash (AM15F)	1
3	00-950415	Panel - Splash (LH) (Standard) (AM15F)	1
4	00-936234	Panel - Splash (RH) (AM15VLF)	1
5	00-893096	Panel - Splash (AM15F)	1
6	00-950414	Panel - Splash (RH) (Standard)	1
7	00-893815	Tray Weldment	1
8	00-893816	Hinge Assy. (LH)	1
9	00-893983	Baffle - Steam	1
10	NS-047-82	Stop Nut 1/4-20 Hex (SST)	8
11	SC-059-29	Cap Screw 1/4-20 x 1/2 Hex Socket Hd. (SST)	4
12	00-893817	Hinge Assy. (RH)	1

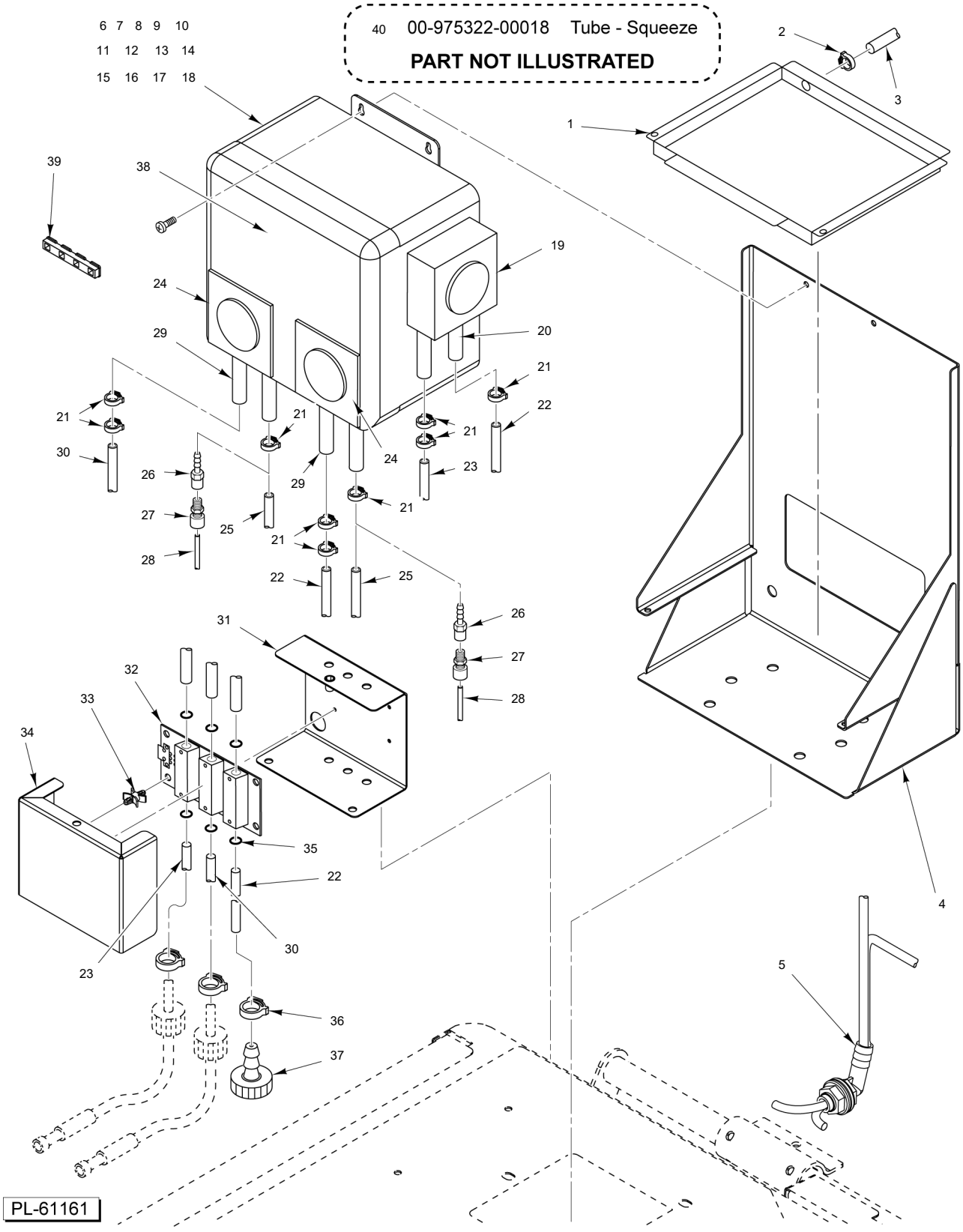

CHEMICAL PUMP (AM15SCB)

CHEMICAL PUMP (AM15SCB)

ILLUS.	PART NO.	NAME OF PART	AMT.
PL-29908			
1	00-975302	Tray - Chemical Catch	1
2	00-185111-00002	Clamp - Hose SNP-6	2
3	00-436293	Tube - Clear	0
4	00-975390	Bracket - Chemical Assy.	1
5	00-185104	Elbow - Feeder Tubes (Incls. Nut & Gasket)	1
*6	00-975477	Chemical System Assy. (Incls. Items 7 thru 18)	1
7	00-975322-00003	Cover - Face Plate Chemical Pump - Roller Cover	3
8	00-975322-00004	Circuit Board	1
9	00-975322-00005	Gear - 15 RPM Motor	1
10	00-975322-00006	Gear - 100 RPM Motor	1
11	00-975322-00011	Transformer	1
12	00-562418	Fitting - Chemical	1
13	00-975322-00013	Block - Pump	1
14	00-975322-00014	Fuse (1A)	1
15	00-975322-00015	Fuse (3A)	1
16	00-436202	Label - Detergent	0
17	00-436203	Label - Sanitizer	0
18	00-436204	Label - Rinse Aid	0
19	00-975322-00017	Roller - Detergent (Yellow)	1
20	00-975322-00019	Tube (Squeeze) (Detergent)	1
21	00-185111-00002	Clamp - Hose SNP-6	9
22	00-185105-00004	Tube - Clear (1/4 O.D. x 144 In.) (Cut to Length) (Detergent)	0
23	00-185105-00002	Tube - Red (1/4 O.D. x 144 Lg.) (Detergent) (Cut to Length)	1
24	00-975322-00017	Roller - Rinse Aid / Sanitizer (Yellow) (Used with Items 27, 28, & 29)	2
25	00-185105-00004	Tube - Clear (1/4 O.D. x 144 In.) (Cut to Length) (Before S/N 231221765)	2
26	FP-092-75	Fitting - Barb (Used with Item 24)	2
27	FP-092-76	Fitting - Reducer (Used with Item 24)	2
28	00-563074-00001	Tube (1/8 O.D.) (Cut to Length) (Used with Item 24)	0
*29	00-563078	Kit - Conversion Tube (1 Required Per Pump Serviced) (Sanitizer or Rinse Aid) (Incls. Items 17, 21, and 26 thru 29)	2
30	00-185105-00006	Tube - Blue (1/4 O.D. x 144 Lg.) (Rinse Aid) (Cut to Length)	1
31	00-562352	Bracket - Cover	1
32	00-892715	Board - Chemical Sense	1
33	00-329056-00001	Standoff	4
34	00-562353	Bracket - Chemical Board	1
35	FE-026-22	Grommet	6
36	00-185111-00001	Clamp - Hose SNP-2	3
37	00-562915	Kit - Bottle Cap (Sanitizer) (Incls. Quantity of 7 of Item 36)	1
38	00-975322-00020	Membrane - Keypad Overlay (UMP300)	1
39	01-606230	Kit - Button Support	1
40	00-975322-00018	Tube - Squeeze (Sanitizer and Rinse Aid)	0

* No Longer Available, Order 01-605408 for Replacement

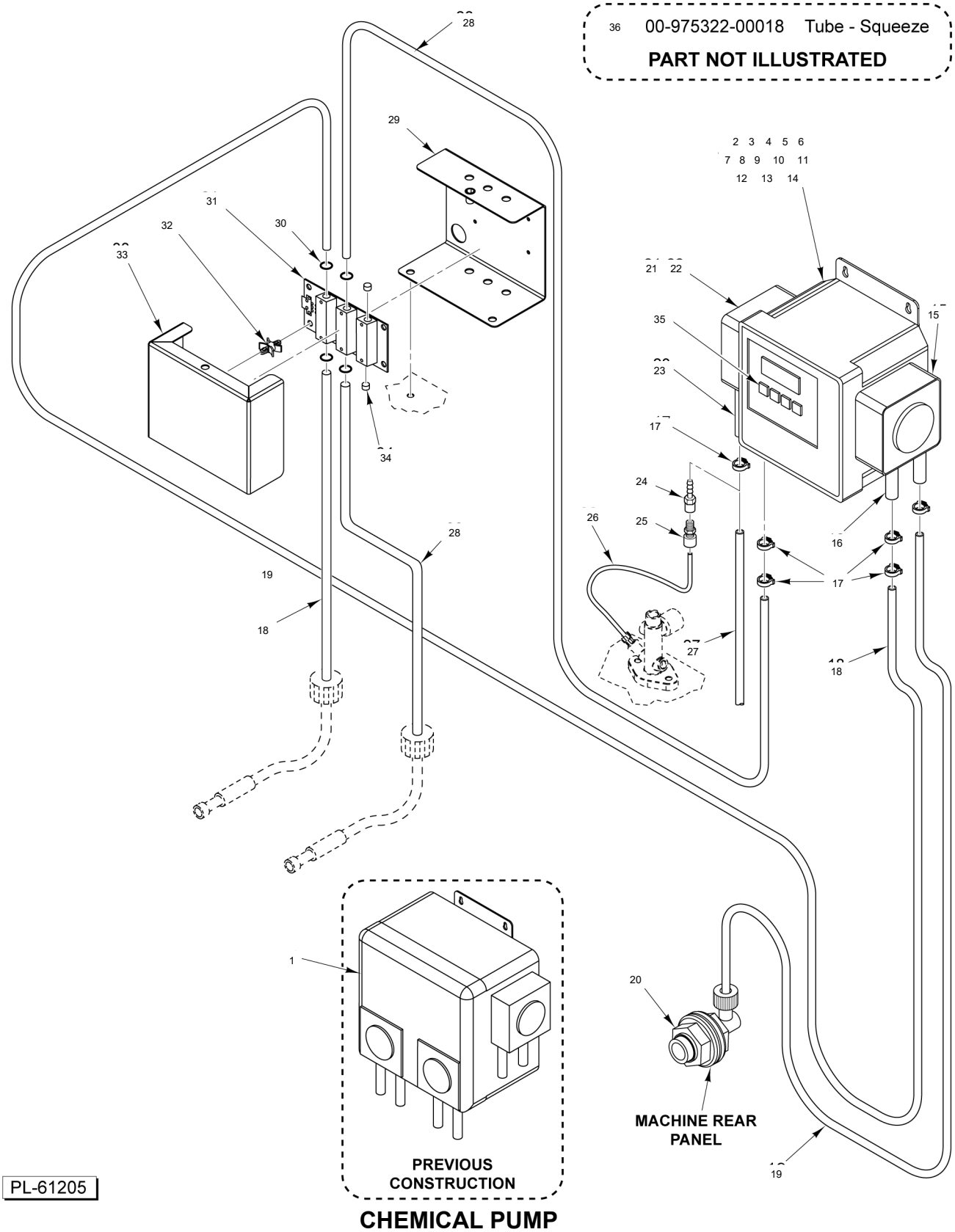

PL-61205

CHEMICAL PUMP (AM15SVLT) (STARTING S/N 231210936)

CHEMICAL PUMP
(AM15SVLT)
(STARTING S/N 231210936)

ILLUS.	PART NO.	NAME OF PART	AMT.
PL-30379			
*1	00-562206	Kit - Chemical Pump Assy. (Before S/N 231210936) (UMP300)	1
2	00-562560-00001	Kit - Chemical Pump Assy. (Starting S/N 231210936) (UMP200)	1
3	00-975322-00003	Cover - Face Plate Chemical Pump - Roller Cover	2
4	00-975322-00004	Circuit Board (Before S/N 231208914) (UMP300)	1
5	00-562560-00002	Circuit Board (Starting S/N 231208914) (UMP200)	1
6	00-975322-00005	Gear - 15 RPM Motor	1
7	00-975322-00006	Gear - 100 RPM Motor	1
8	00-975322-00011	Transformer (Before S/N 231208914) (UMP300)	1
9	00-562560-00003	Transformer (Starting S/N 231208914) (UMP200)	1
10	00-975322-00013	Block - Pump	1
11	00-975322-00014	Fuse (1A)	1
12	00-975322-00015	Fuse (3A)	1
13	00-436202	Label - Detergent	0
14	00-436204	Label - Rinse Aid	0
15	00-975322-00017	Roller - Detergent (Yellow)	1
16	00-975322-00019	Tube (Squeeze) (Detergent)	1
17	00-185111-00002	Clamp - Hose SNP-6	6
18	00-185105-00002	Tube - Red (1/4 O.D. x 144 Lg.) (Detergent) (Cut to Length)	0
19	00-185105-00004	Tube - Clear (1/4 O.D. x 144 In.) (Cut to Length) (Detergent)	0
20	00-562418	Fitting - Chemical	1
**21	00-975322-00007	Roller - Rinse Aid / Sanitizer (Blue) (Used with Item 27) (Before S/N 231221765)	1
22	00-975322-00017	Roller (Yellow) (Used with Items 24, 25, & 26)	1
23	00-563078	Kit - Conversion Tube (Incls. Items 17, 22 thru 25)	1
24	FP-092-75	Fitting - Barb (Used with Item 22)	1
25	FP-092-76	Fitting - Reducer (Used with Item 22)	1
26	00-563074-00004	Tube (1/8 O.D) (68 In.) (Used with Item 22)	1
**27	00-185105-00004	Tube - Clear (1/4 O.D. x 144 In.) (Cut to Length) (Used with Item 21) (Before S/N 231221765)	0
28	00-185105-00006	Tube - Blue (1/4 O.D. x 144 Lg.) (Rinse Aid) (Cut to Length)	0
29	00-562352	Bracket - Cover	1
30	FE-026-22	Grommet	4
31	00-892715	Board - Chemical Sense	1
32	00-329056-00001	Standoff	4
33	00-562353	Bracket - Chemical Board	1
34	FE-027-22	Plug	2
35	00-562560-00004	Membrane - Keypad Overlay (UMP200)	1
36	00-975322-00018	Tube - Squeeze	0

* Replace with Item 2
** Replace with Item 23

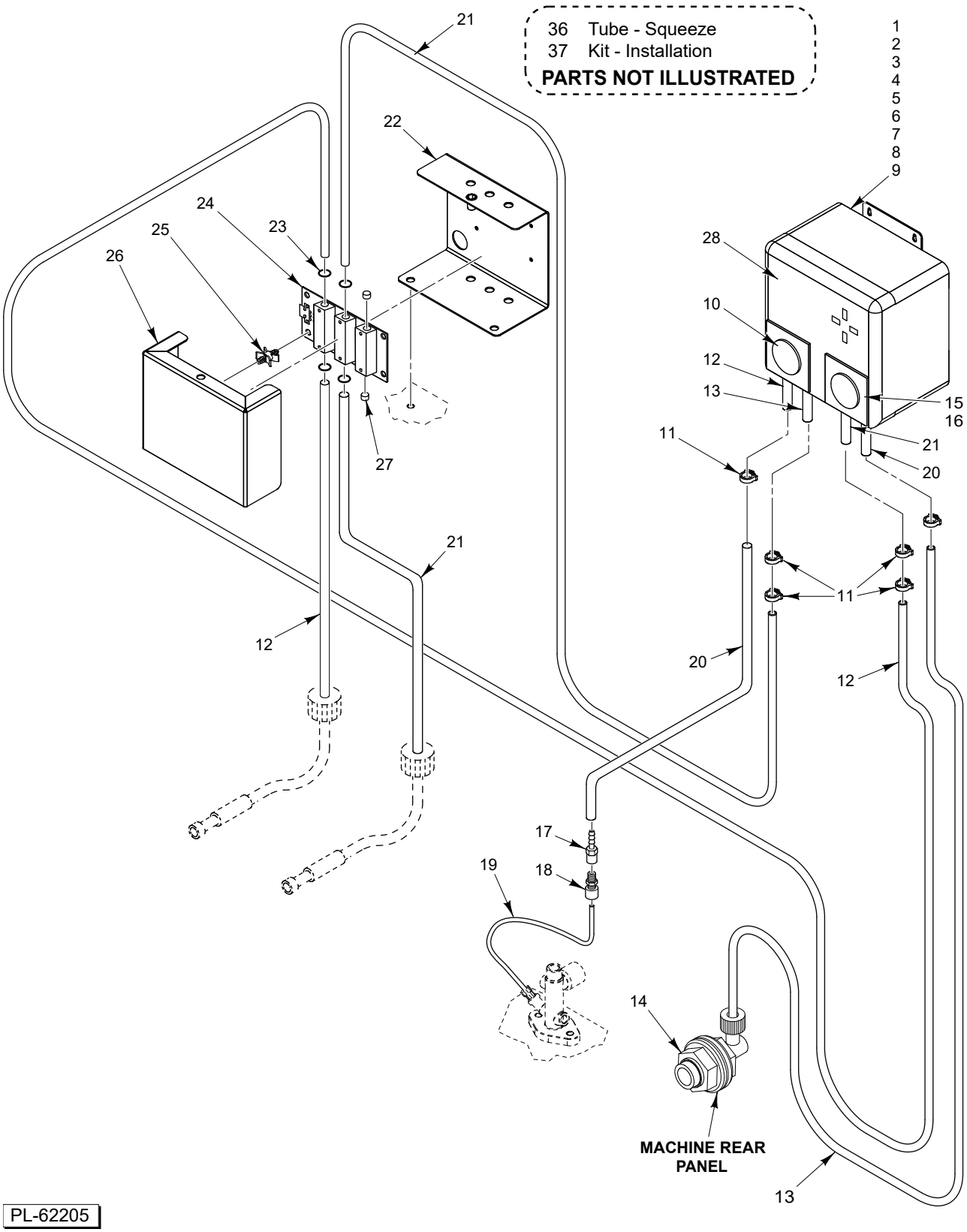

PL-62205

CHEMICAL PUMP
(AM15SVLT)
(UMP200 DIGITAL PLUS)

CHEMICAL PUMP
(AM15SVLT)
(UMP200 DIGITAL PLUS)

PL-37288

ILLUS.	PART NO.	NAME OF PART	AMT.
1	01-605437-00001	Kit - Chemical Pump Assy. (UMP200 Digital Plus)	1
2	00-975322-00003	Cover - Face Plate Chemical Pump - Roller Cover	2
3	01-605421-00002	Circuit Board (UMP Digital Plus)	1
4	00-975322-00005	Gear - 15 RPM Motor	1
5	00-975322-00006	Gear - 100 RPM Motor	1
6	01-605421-00003	Supply - Power (20 VDC., 77 W., 3.2 Amp.)	1
7	01-605421-00012	Block - Pump (UMP200 Digital Plus)	1
8	00-436202	Label - Detergent	AR
9	00-436204	Label - Rinse Aid	AR
10	00-975322-00017	Roller - Detergent (Yellow)	1
11	00-185111-00002	Clamp - Hose SNP-6	6
12	00-185105-00002	Tube - Red (1/4 O.D. x 144 Lg.) (Detergent) (Cut to Length)	AR
13	00-185105-00004	Tube - Clear (1/4 O.D. x 144 In.) (Cut to Length) (Detergent)	AR
14	00-562418	Fitting - Chemical	1
15	00-975322-00007	Roller - Rinse Aid / Sanitizer (Blue) (Used with Item 20)	1
16	00-975322-00017	Roller (Yellow) (Used with Items 17, 18, & 19)	1
17	FP-092-75	Fitting - Barb (Used with Item 16)	1
18	FP-092-76	Fitting - Reducer (Used with Item 16)	1
19	00-563074-00004	Tube (1/8 O.D) (68 In.) (Used with Item 16)	1
20	00-185105-00004	Tube - Clear (1/4 O.D. x 144 In.) (Cut to Length) (Used with Item 15)	AR
21	00-185105-00006	Tube - Blue (1/4 O.D. x 144 Lg.) (Rinse Aid) (Cut to Length)	AR
22	00-562352	Bracket - Cover	1
23	FE-026-22	Grommet	4
24	00-892715	Board - Chemical Sense	1
25	00-329056-00001	Standoff	4
26	00-562353	Bracket - Chemical Board	1
27	FE-027-22	Plug	2
28	01-605421-00014	Overlay (UMP200 Digital Plus)	1
29	00-975322-00018	Tube - Squeeze	AR
30	01-605615	Kit - Installation	1

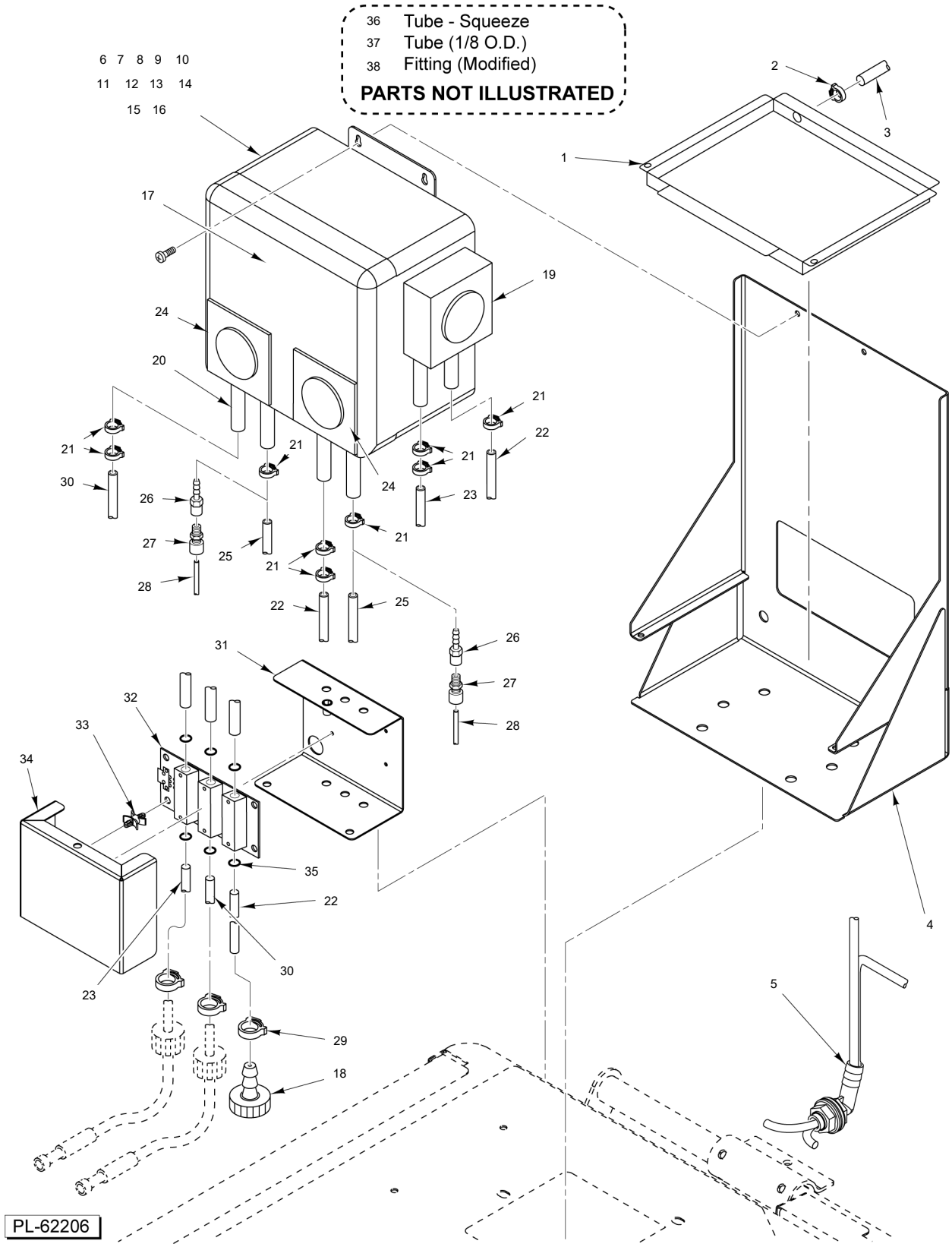

CHEMICAL PUMP
(AM15SCB)
(UMP300 DIGITAL PLUS)

CHEMICAL PUMP
(AM15SCB)
(UMP300 DIGITAL PLUS)

ILLUS.	PART NO.	NAME OF PART	AMT.
PL-37291			
1	00-975302	Tray - Chemical Catch	1
2	00-185111-00002	Clamp - Hose SNP-6	2
3	00-436293	Tube - Clear	0
4	00-975390	Bracket - Chemical Assy.	1
5	00-185104	Elbow - Feeder Tubes (Incls. Nut & Gasket)	1
6	01-605408	Chemical System Assy. (Incls. Items 7 thru 16)	1
7	00-975322-00003	Cover - Face Plate Chemical Pump - Roller Cover	3
8	01-605421-00002	Circuit Board (UMP Digital Plus)	1
9	00-975322-00005	Gear - 15 RPM Motor	1
10	00-975322-00006	Gear - 100 RPM Motor	1
11	01-605421-00004	Supply - Power	1
12	00-562418	Fitting - Chemical	1
13	01-605421-00013	Block - Pump	1
14	00-436204	Label - Rinse Aid	0
15	00-436202	Label - Detergent	0
16	00-436203	Label - Sanitizer	0
17	01-605421-00014	Overlay (UMP200 Digital Plus) (UMP300 Digital Plus)	1
18	00-562915	Kit - Bottle Cap (Sanitizer) (Incls. Quantity of 7 of Item 29)	1
19	00-975322-00017	Roller - Sanitizer (Yellow)	1
20	00-975322-00019	Tube (Squeeze) (Detergent)	1
21	00-185111-00002	Clamp - Hose SNP-6	9
22	00-185105-00004	Tube - Clear (1/4 O.D. x 144 In.) (Cut to Length) (Sanitizer)	0
23	00-185105-00002	Tube - Red (1/4 O.D. x 144 Lg.) (Sanitizer) (Cut to Length)	1
24	00-975322-00017	Roller - Rinse Aid / Detergent (Yellow) (Used with Items 27 & 28)	2
25	00-185105-00004	Tube - Clear (1/4 O.D. x 144 In.) (Cut to Length)	2
26	FP-092-75	Fitting - Barb (Used with Item 24)	2
27	FP-092-76	Fitting - Reducer (Used with Item 24)	2
28	00-563074-00001	Tube (1/8 O.D.) (Cut to Length) (Used with Item 24)	0
29	00-185111-00001	Clamp - Hose SNP-2	3
30	00-185105-00006	Tube - Blue (1/4 O.D. x 144 Lg.) (Rinse Aid) (Cut to Length)	1
31	00-562352	Bracket - Cover	1
32	00-892715	Board - Chemical Sense	1
33	00-329056-00001	Standoff	4
34	00-562353	Bracket - Chemical Board	1
35	FE-026-22	Grommet	6
36	00-975322-00018	Tube - Squeeze (Sanitizer and Rinse Aid)	0
37	00-563074-00001	Tube (1/8 O.D.)	1
38	00-563169	Fitting (Modified)	0

3	00-295288	Peg Type Tray Rack (Packaged)
4	00-892671	Rack - Bun Pan
5	00-474800	Rack (6 Pan)
6	00-975317	Saddle Table
7	00-562119	Rack Slide, Dish Table
8	00-562434	Rack - Sheet Pan
9	00-975303	Set - Leg Extensions

PARTS NOT ILLUSTRATED

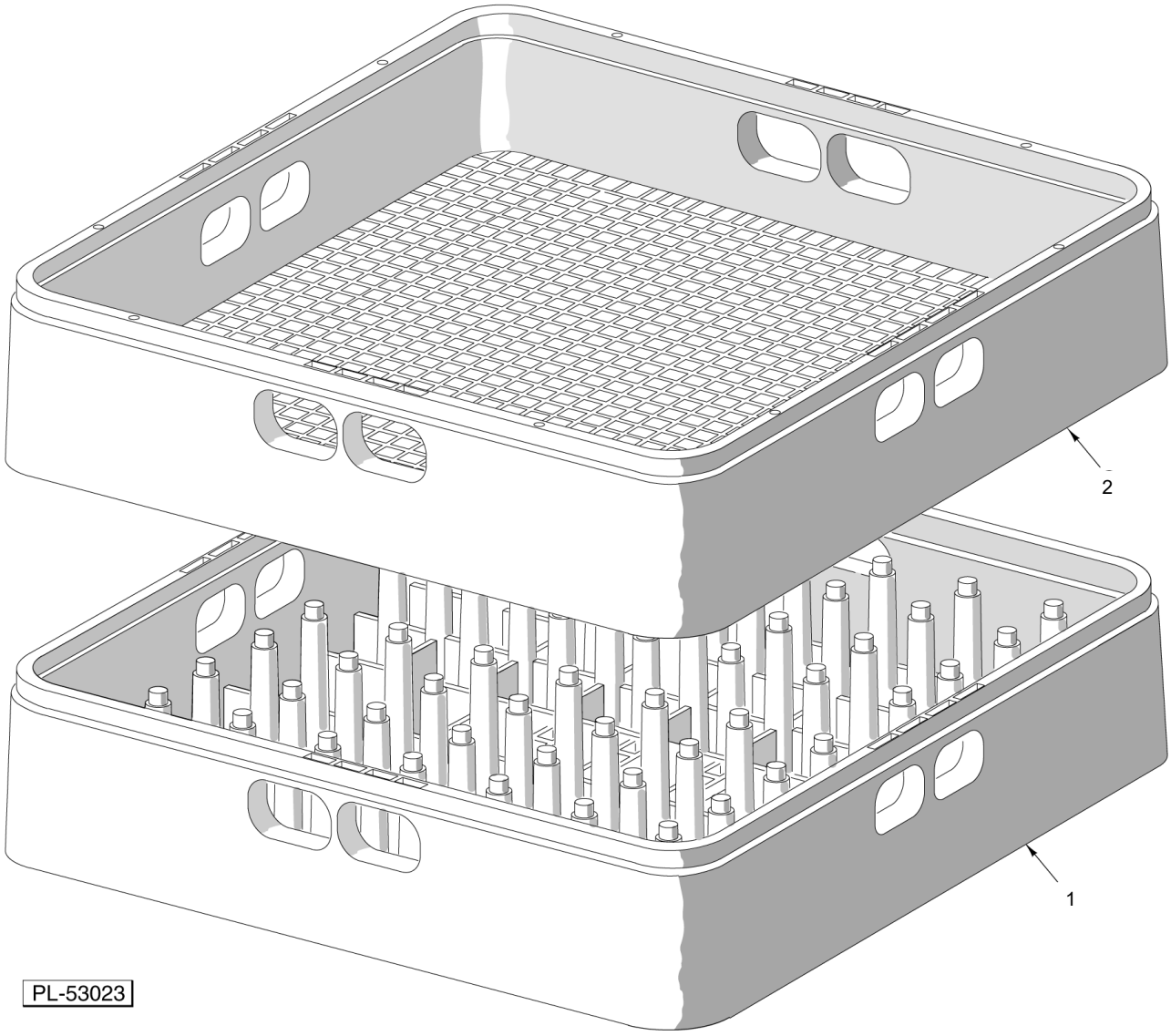

DISH RACKS AND ACCESSORIES

DISH RACKS AND ACCESSORIES

ILLUS.	PART NO.	NAME OF PART	AMT.
PL-4442			
1	00-315191	Rack - Peg (Packaged)	1
2	00-315193	Rack - Combination (Packaged)	1
3	00-295288	Peg Type Tray Rack (Packaged)	1
4	00-892671	Rack - Bun Pan	1
5	00-474800	Rack (6 Pan)	1
6	00-975317	Saddle Table	1
7	00-562119	Rack Slide, Dish Table	1
8	00-562434	Rack - Sheet Pan	1
9	00-975303	Set - Leg Extensions (Set of 4)	1