HOBART

SERVICE

CATALOG OF REPLACEMENT PARTS



AM16 SERIES DISHWASHERS

AM16-BAS
AM16T-BAS
AM16VL-BAS
AM16VLT-BAS
AM16-ASR
AM16T-ASR
AM16VL-ADV
AM16VLT-ADV
AM16-SVLT
AM16-SCB
AM16VL-SCB

A Product of Hobart Service 701 S. Ridge Ave Troy, OH 45374

FORM F43349 Rev. G (July 2026)

 © HOBART SERVICE 2026

Table of Contents

4 CONTROLS
6 ELECTRICAL COMPONENTS (208-240 V., 60 HZ.)
8 ELECTRICAL COMPONENTS
10 ELECTRICAL COMPONENTS (SCB)
12 CABLES
14 LEAD WIRE ASSEMBLIES
16 DOOR ASSEMBLY (STANDARD HEIGHT) (PREVIOUS CONSTRUCTION)
18 DOOR ASSEMBLY (STANDARD HEIGHT) (CURRENT CONSTRUCTION)
20 DOOR ASSEMBLY (HTS)
22 CHAMBER GUIDES AND TOP PANEL (HTS)
24 DOOR LOCK ASSEMBLY
26 ELECTRIC BOOSTER AND RINSE PUMP
28 ELECTRIC BOOSTER AND RINSE PUMP (AM16SCB)
30 WASH PUMP ASSEMBLY
32 WASH AND RINSE ARM ASSEMBLY
34 DRAIN AND DWER SYSTEM
36 VENTLESS RECOVERY SYSTEM
38 WATER FILL AND AIR GAP (BASE)
40 WATER FILL AND AIR GAP (VL-ADV) (STD)
42 WATER FILL AND AIR GAP (VL-ADV) (HTS)
44 WATER FILL AND AIR GAP (VENTLESS) (STD)
46 WATER FILL AND AIR GAP (VENTLESS) (HTS)
48 WATER FILL AND AIR GAP (ASR)
50 WATER FILL AND AIR GAP (VENTLESS) (SCB)
52 AUTOMATIC SOIL REMOVAL (ASR) SYSTEM (RH)
54 AUTOMATIC SOIL REMOVAL (ASR) SYSTEM (LH)
56 AUTO-DELIME
58 ELECTRIC HEAT AND SENSORS
60 CHEMICAL PUMP - HOT SANITIZING (STD)
62 CHEMICAL PUMP - HOT SANITIZING (HTS)
64 CHEMICAL PUMP (STD) (SCB)
66 FRAME AND PANELS
68 STRAINERS
70 STRAINERS (ASR)
72 RACK ASSEMBLY
74 DISH RACKS AND ACCESSORIES

16	00-563094-00001	Cable Assy. (HMI)
17	00-562889-00001	Cable (USB - Male A to Male A)

PARTS NOT ILLUSTRATED

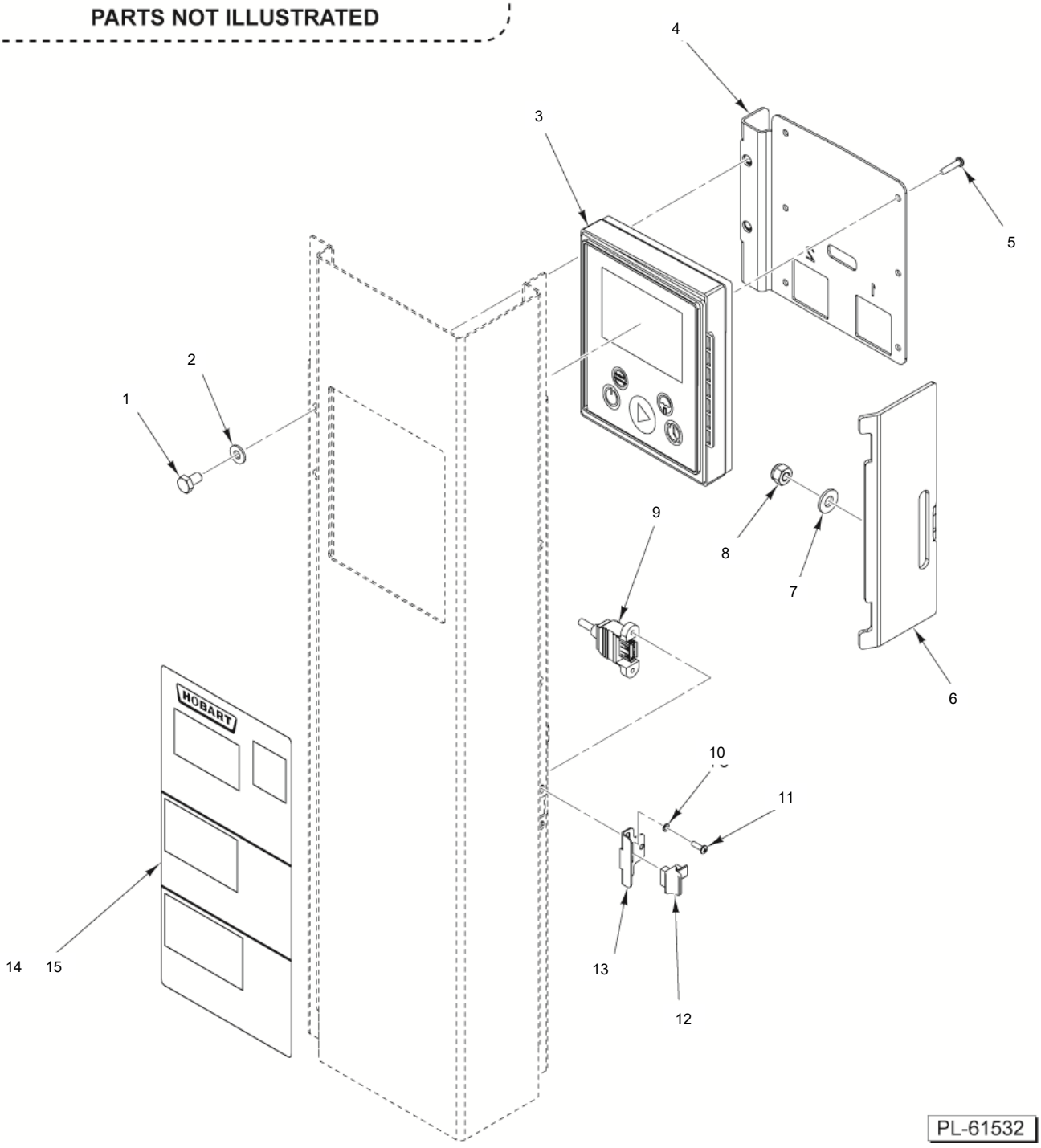

CONTROLS

CONTROLS

ILLUS. PL-61532	PART NO.	NAME OF PART	AMT.
1	SC-041-50	Cap Screw 1/4-20 x 1/2 Hex Hd. (SST)	2
2	WL-006-17	Lockwasher 1/4 Helical (SST)	2
3	00-975443-00001	Display (HMI)	1
4	00-562639-00001	Mount - Control	1
5	SD-039-98	Self-Tapping Screw #7 - M3.5 x 14 Phil. Hd. (SST)	4
6	00-562638	Pivot - Cartridge	1
7	WS-017-06	Washer .281 x .625 x .062 (SST)	2
8	NS-047-82	Stop Nut 1/4-20 Hex (SST)	2
9	00-563094-00002	Cable Assy. (USB)	1
10	WL-006-39	Lockwasher #4 Helical (SST)	2
11	SC-125-30	Mach. Screw 4-40 x 3/8 Phil. Pan Hd. (SST)	2
12	00-443581	Plug - USB Type A	1
13	00-562730	Plate - Seal (USB)	1
14	00-438131-00226	Label (Instructions) (Chemical)	1
15	00-562887	Label (Instructions) (Advansys)	1
16	00-563094-00001	Cable Assy. (HMI) (HMI)	1
17	00-562889-00001	Cable (USB - Male A to Male A)	1

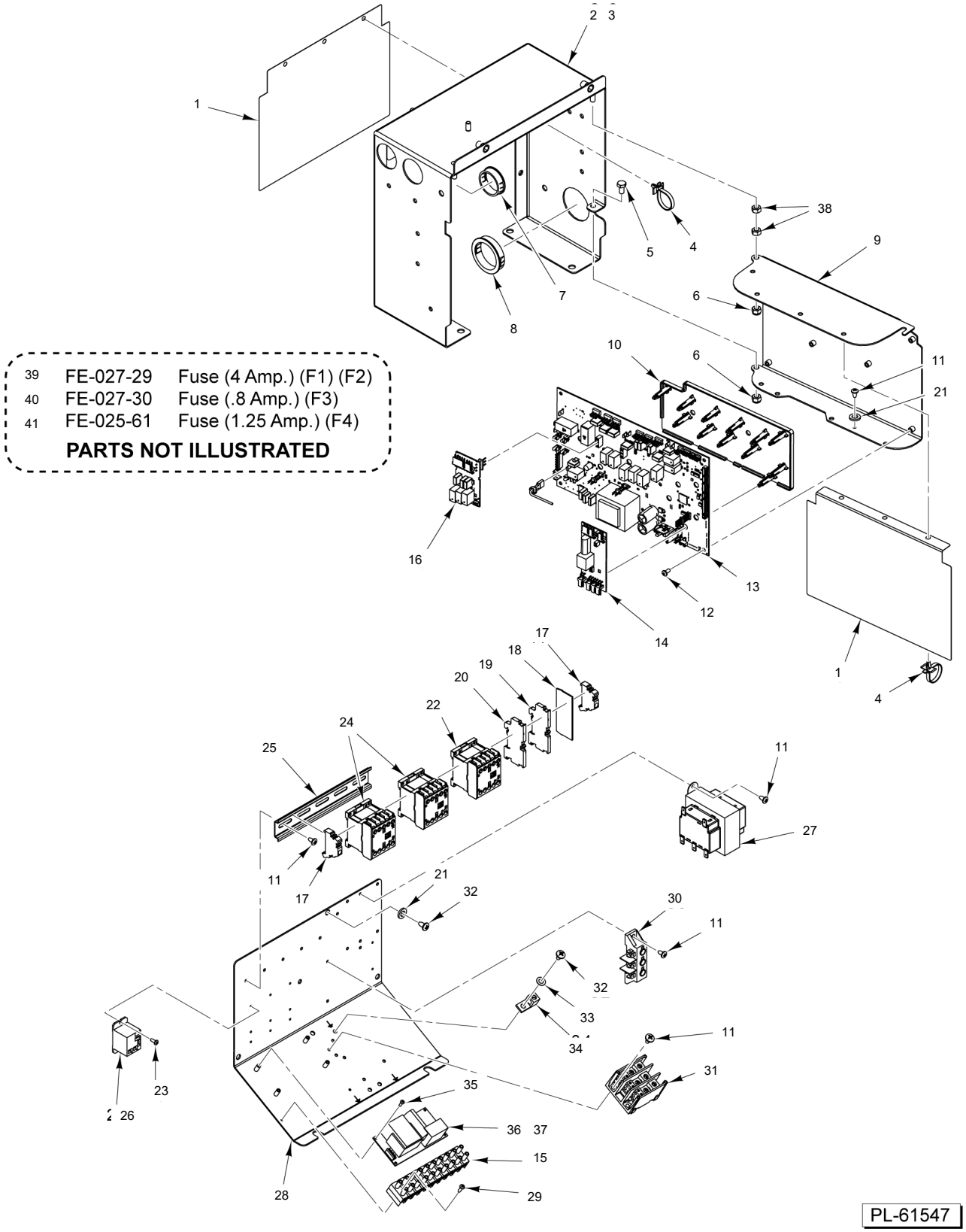

ELECTRICAL COMPONENTS
(208-240 V., 60 Hz.)

ELECTRICAL COMPONENTS
(208-240 V., 60 Hz.)

ILLUS. PL-61547	PART NO.	NAME OF PART	AMT.
1	00-562729	Mylar	2
2	00-562187	Weldment - Box	1
3	00-563089	Plate - Control Box	1
4	00-444428	Tie - Cable Releasable	AR
5	SC-041-50	Cap Screw 1/4-20 x 1/2 Hex Hd. (SST)	7
6	NS-047-82	Stop Nut 1/4-20 Hex (SST)	AR
7	FE-023-53	Bushing - Snap	AR
8	FE-027-34	Bushing - Electrical (Snap)	1
9	00-562539	Mount - Control Board	1
10	00-562526	Support - Control	1
11	SD-019-23	Self-Tapping Screw 10-16 x 3/8 Phil. Pan Hd., Type B	6
12	SC-129-33	Mach. Screw 8-32 x 3/8 Phil. Pan Hd.	6
13	00-975430-00001	Board - Control (Items 14 & 16 Not Included)	1
14	00-975433	Board (Daughter) ECA6 (Advansys) (Powers ventless, delime pump, & chemical pumps)	1
15	00-562890	Block - Terminal (20 Amp.) (10 Pole)	1
16	00-975431	Board (Daughter) ECA7 (Advansys) (Powers ASR machine)	1
17	00-949805-00002	Stop - End	2
18	00-562892	Plate - End	1
19	00-562720-00002	Block - Terminal (2 CON) (Red)	1
20	00-562720-00001	Block - Terminal (2 CON) (Black)	1
21	WL-013-11	Lockwasher #10 Internal Shakeproof (SST)	2
22	00-562597-00002	Contactor (20 Amp.) (208-240 V. Coil)	1
23	SD-015-38	Self-Tapping Screw 6-32 x 3/8 Phil. Pan Hd., Type TT	6
24	00-562597-00001	Contactor (20 Amp.) (120 V. Coil)	2
25	00-948824-00004	Rail - Din (7 In.)	1
26	00-562599-00001	Relay (1 Pole) (40 Amp.) (240V Coil) (208-240 V. Coil)	1
27	00-562609-00002	Transformer (80VA 208/240 V.)	1
28	00-562188	Plate - Mounting	1
29	SD-019-30	Self-Tapping Screw 4-24 x 5/8 Phil. Pan Hd., Type B	2
30	00-562895-00001	Block - Terminal	1
31	00-562894	Block - Terminal (3-Pole)	1
32	SD-035-77	Self-Tapping Screw 1/4-20 x 3/8 Phil. Pan Hd., Type TT	4
33	WL-007-15	Lockwasher 1/4 External Shakeproof	4
34	00-118544-00002	Lug - Grounding	3
35	SC-125-30	Mach. Screw 4-40 x 3/8 Phil. Pan Hd. (SST)	4
36	00-562538-00002	Power Supply (HTS)	1
37	00-562538-00003	Power Supply (STD)	1
38	NS-015-01	Nut 1/4-20 Hex (SST)	2
39	FE-027-29	Fuse (4 Amp.) (F1) (F2)	AR
40	FE-027-30	Fuse (.8 Amp.) (F3)	AR
41	FE-025-61	Fuse (1.25 Amp.) (250 V.) (F4)	AR

(480 V., 60 Hz.: 380-415 V., 50 Hz.: 200-240 V., 50 Hz.)

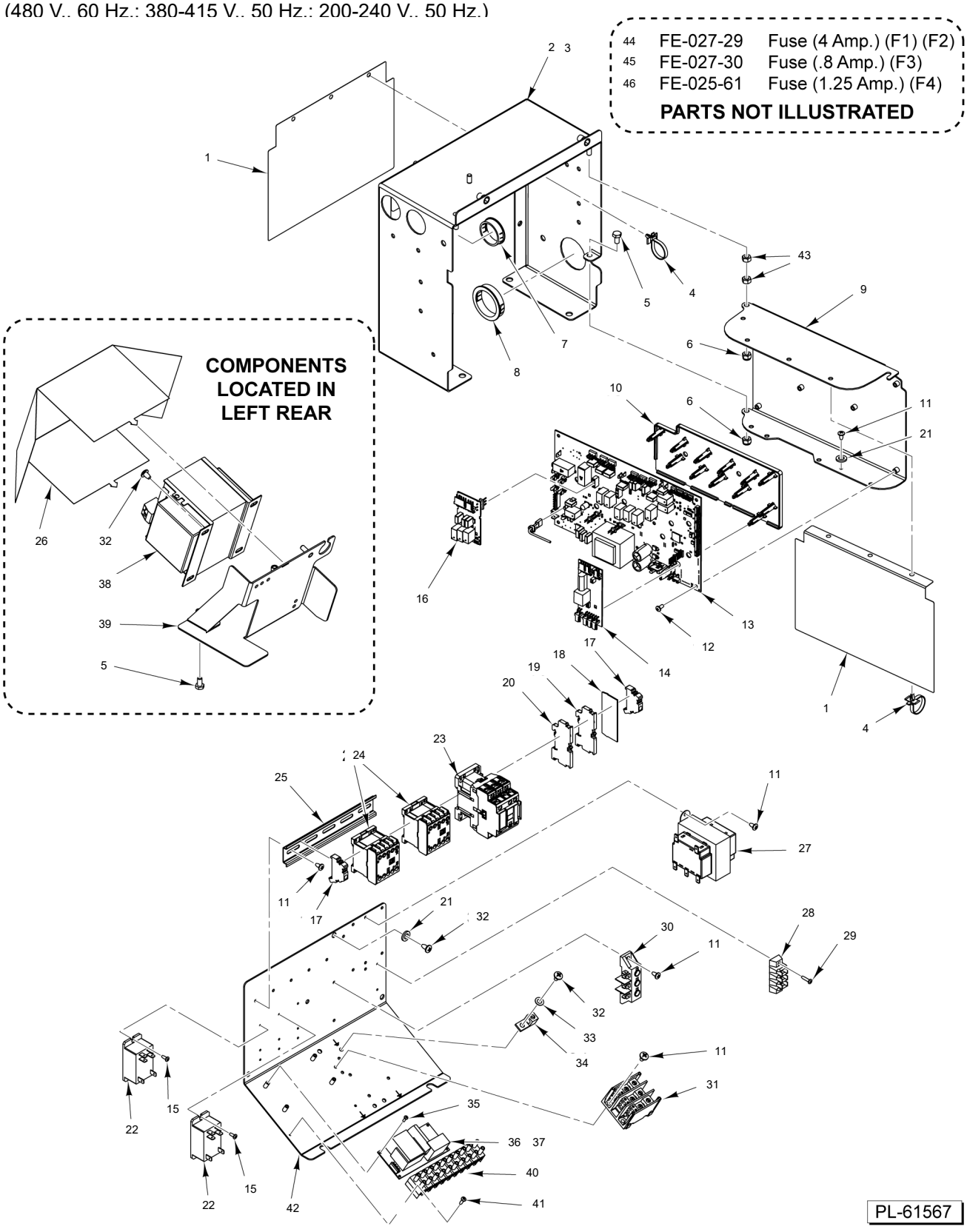

ELECTRICAL COMPONENTS

ELECTRICAL COMPONENTS

ILLUS. PL-61567	PART NO.	NAME OF PART	AMT.
1	00-562729	Mylar	2
2	00-562187	Weldment - Box	1
3	00-563089	Plate - Control Box	1
4	00-444428	Tie - Cable Releasable	AR
5	SC-041-50	Cap Screw 1/4-20 x 1/2 Hex Hd. (SST)	7
6	NS-047-82	Stop Nut 1/4-20 Hex (SST)	AR
7	FE-023-53	Bushing - Snap	AR
8	FE-027-34	Bushing - Electrical (Snap)	1
9	00-562539	Mount - Control Board	1
10	00-562526	Support - Control	1
11	SD-019-23	Self-Tapping Screw 10-16 x 3/8 Phil. Pan Hd., Type B	6
12	SC-129-33	Mach. Screw 8-32 x 3/8 Phil. Pan Hd.	6
13	00-975430-00001	Board - Control	1
14	00-975433	Board (Daughter) ECA6 (Advansys)	1
15	SD-015-38	Self-Tapping Screw 6-32 x 3/8 Phil. Pan Hd., Type TT	6
16	00-975431	Board (Daughter) ECA7 (Advansys) (Not used on 480 V. Units)	1
17	00-949805-00002	Stop - End	2
18	00-562892	Plate - End	1
19	00-562720-00002	Block - Terminal (2 CON) (Red)	1
20	00-562720-00001	Block - Terminal (2 CON) (Black)	1
21	WL-013-11	Lockwasher #10 Internal Shakeproof (SST)	2
22	00-087714-042-1	Relay (2-Pole) (120 V. Coil) (30 Amp.) (480 V. Units)	2
23	00-562597-00003	Contactor (20 Amp.) (208-240V. Coil) (480 V. Units)	1
24	00-562597-00001	Contactor (20 Amp.) (120 V. Coil)	2
25	00-948824-00004	Rail - Din (7 In.)	1
26	00-950229-00002	Cover - Mylar (480 V. Units)	1
27	00-562609-00002	Transformer (80VA 208/240 V.)	1
28	00-919742-00002	Block - Terminal (480 V. Units)	1
29	SD-038-02	Self-Tapping Screw 6-20 x 5/8 Phil. Pan Hd., Type B	2
30	00-562895-00001	Block - Terminal	1
31	00-562894	Block - Terminal (3-Pole)	1
32	SD-035-77	Self-Tapping Screw 1/4-20 x 3/8 Phil. Pan Hd., Type TT	4
33	WL-007-15	Lockwasher 1/4 External Shakeproof	4
34	00-118544-00002	Lug - Grounding	3
35	SC-125-30	Mach. Screw 4-40 x 3/8 Phil. Pan Hd. (SST)	4
36	00-562538-00002	Power Supply (HTS)	1
37	00-562538-00003	Power Supply (STD)	1
38	00-562632	Transformer (500 VA) (480 V. Units)	1
39	00-562533	Mount - Transformer (480 V. Units)	1
40	00-562890	Block - Terminal (20 Amp.) (10 Pole)	1
41	SD-019-30	Self-Tapping Screw 4-24 x 5/8 Phil. Pan Hd., Type B	2
42	00-562188	Plate - Mounting	1
43	NS-015-01	Nut 1/4-20 Hex (SST)	2
44	FE-027-29	Fuse (4 Amp.) (F1) (F2)	AR
45	FE-027-30	Fuse (.8 Amp.) (F3)	AR
46	FE-025-61	Fuse (1.25 Amp.) (250 V.) (F4)	AR

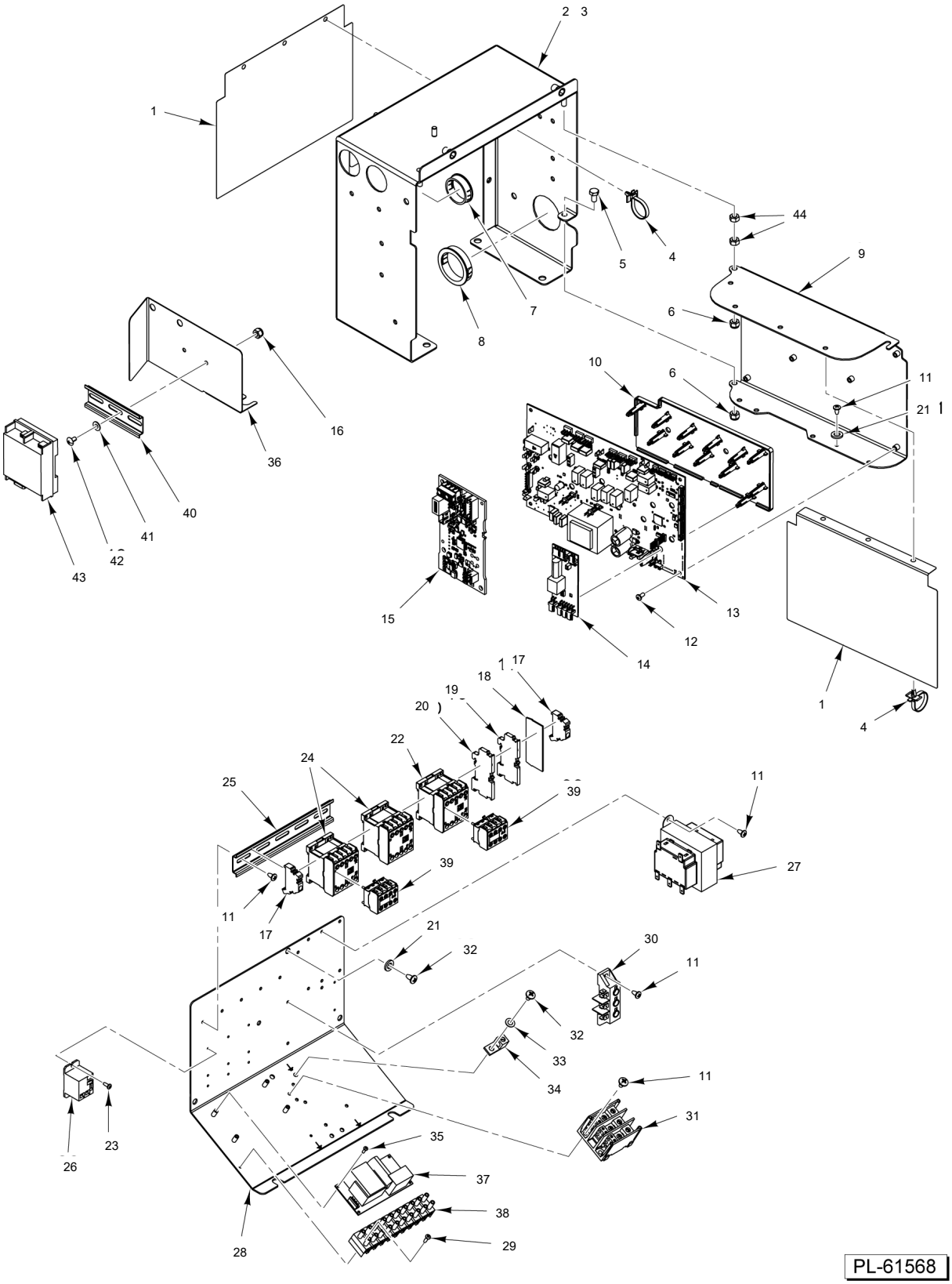

ELECTRICAL COMPONENTS (SCB)

ELECTRICAL COMPONENTS (SCB)

ILLUS. PL-61568	PART NO.	NAME OF PART	AMT.
1	00-562729	Mylar	2
2	00-562187	Weldment - Box	1
3	00-563089	Plate - Control Box	1
4	00-444428	Tie - Cable Releasable	AR
5	SC-041-50	Cap Screw 1/4-20 x 1/2 Hex Hd. (SST)	7
6	NS-047-82	Stop Nut 1/4-20 Hex (SST)	AR
7	FE-023-53	Bushing - Snap	AR
8	FE-027-34	Bushing - Electrical (Snap)	1
9	00-562539	Mount - Control Board	1
10	00-562526	Support - Control	1
11	SD-019-23	Self-Tapping Screw 10-16 x 3/8 Phil. Pan Hd., Type B	6
12	SC-129-33	Mach. Screw 8-32 x 3/8 Phil. Pan Hd.	6
13	00-975430-00001	Board - Control	1
14	00-975433	Board (Daughter) ECA6 (Advansys)	1
15	00-975434	Board (Modbus) ECA8	1
16	NS-031-15	Stop Nut 10-24 Hex (SST)	2
17	00-949805-00002	Stop - End	2
18	00-562892	Plate - End	1
19	00-562720-00002	Block - Terminal (2 CON) (Red)	1
20	00-562720-00001	Block - Terminal (2 CON) (Black)	1
21	WL-013-11	Lockwasher #10 Internal Shakeproof (SST)	2
22	00-562597-00002	Contactor (20 Amp.) (208-240 V. Coil)	1
23	SD-015-38	Self-Tapping Screw 6-32 x 3/8 Phil. Pan Hd., Type TT	6
24	00-562597-00001	Contactor (20 Amp.) (120 V. Coil)	2
25	00-948824-00004	Rail - Din (7 In.)	1
26	00-562599-00001	Relay (1 Pole) (40 Amp.) (240V Coil) (208-240 V. Coil)	1
27	00-562609-00002	Transformer (80VA 208/240 V.)	1
28	00-562188	Plate - Mounting	1
29	SD-019-30	Self-Tapping Screw 4-24 x 5/8 Phil. Pan Hd., Type B	2
30	00-562895-00001	Block - Terminal	1
31	00-562894	Block - Terminal (3-Pole)	1
32	SD-035-77	Self-Tapping Screw 1/4-20 x 3/8 Phil. Pan Hd., Type TT	4
33	WL-007-15	Lockwasher 1/4 External Shakeproof	4
34	00-118544-00002	Lug - Grounding	3
35	SC-125-30	Mach. Screw 4-40 x 3/8 Phil. Pan Hd. (SST)	4
36	00-563102	Bracket (sPOD)	1
37	00-562538-00003	Power Supply (STD)	1
38	00-562890	Block - Terminal (20 Amp.) (10 Pole)	1
39	00-562598	Switch - Auxilary	2
40	00-949145-00003	Rail - Din	1
41	WS-019-06	Washer (SST)	2
42	SC-066-05	Mach. Screw 10-24 x 3/8 Phil. Truss Hd. (SST)	2
43	00-975355	sPOD	1
44	NS-015-01	Nut 1/4-20 Hex (SST)	2

Item Number	Cable Designation	Description
1	-	Cable Assy. (480 V. Transformer)
2	-	Cable Assy. (Heaters)
3	-	Cable Assy. (BFV)
4	-	Cable Assy. (ASR Pump)
5	-	Cable Assy. (Booster)
6	-	Cable Assy. (Wash Pump)
7	-	Cable Assy. (Rinse Pump)
8	-	Cable Assy. (Drain Pump)
9	-	Cable Assy. (CU Power)
10	-	Cable Assy. (Power Supply - AC)
11	-	Cable Assy. (Power Supply - DC)
12	-	Cable Assy. (Delime)
13	-	Cable Assy. (Door Switch)
14	-	Cable Assy. (Fan - Ventless Units)
15	-	Cable Assy. (Door Lock)
16	-	Cable Assy. (Jumper - Rinse Temperature)
17	-	Cable Assy. (PSI/Temp Sensor)
18	-	Cable Assy. (Overtemp)
19	-	Cable Assy. (Control Monitor)
20	-	Cable Assy. (Strainer)
21	-	Cable Assy. (ASR Strainer/Float)
22	-	Cable Assy. (MODBUS Power)
23	-	Cable Assy. (MODBUS CAN)
24	-	Cable Assy. (TFV)
25	-	Cable Assy. (ASR Left)
26	-	Cable Assy. (HMI)
27	-	Cable Assy. (USB)
28	-	Cable Assy. (Chemical Sensor)
29	-	Cable Assy. (Chemical Box Sensor)
30	-	Cable Assy. (Chemical Pumps)
31	-	Cable Assy. (Chemical Box Pumps)
32	-	Cable (USB - Male A to Male A)

PL-61534

CABLES

CABLES

ILLUS. PL-61534	PART NO.	NAME OF PART	AMT.
1	00-562706	Cable Assy. (480 V. Transformer)	1
2	00-563091-00001	Cable Assy. (Heaters)	1
3	00-563091-00002	Cable Assy. (BFV)	1
4	00-563091-00004	Cable Assy. (ASR Pump)	1
5	00-563091-00005	Cable Assy. (Booster)	1
6	00-563092-00001	Cable Assy. (Wash Pump)	1
7	00-563092-00002	Cable Assy. (Rinse Pump)	1
8	00-563092-00003	Cable Assy. (Drain Pump)	1
9	00-563092-00004	Cable Assy. (CU Power)	1
10	00-563092-00005	Cable Assy. (Power Supply - AC)	1
11	00-563092-00006	Cable Assy. (Power Supply - DC)	1
12	00-563092-00007	Cable Assy. (Delime)	1
13	00-563093-00001	Cable Assy. (Door Switch)	1
14	00-563093-00002	Cable Assy. (Fan - Ventless Units)	1
15	00-563093-00003	Cable Assy. (Door Lock)	1
16	00-563093-00004	Cable Assy. (Jumper - Rinse Temperature)	1
17	00-563095-00001	Cable Assy. (PSI/Temperature Sensor)	1
18	00-563096-00001	Cable Assy. (Overtemp)	1
19	00-563096-00002	Cable Assy. (Control Monitor)	1
20	00-563097-00001	Cable Assy. (Strainer)	1
21	00-563097-00002	Cable Assy. (ASR Strainer/Float)	1
22	00-563097-00003	Cable Assy. (MODBUS Power)	1
23	00-563097-00004	Cable Assy. (MODBUS CAN)	1
24	00-563091-00003	Cable Assy. (TFV)	1
25	00-563093-00005	Cable Assy. (ASR Left)	1
26	00-563094-00001	Cable Assy. (HMI) (HMI)	1
27	00-563094-00002	Cable Assy. (USB)	1
28	00-563174	Chemical Sensor Cable Assy. (Chemical Sensor)	1
29	00-563175	Cable Assy. (Chemical Box Sensor)	1
30	00-563176	Cable Assy. (Chemical Pumps)	1
31	00-563177	Cable Assy. (Chemical Box Pumps)	1
32	00-562889-00001	Cable (USB - Male A to Male A) (service cockpit use only)	1

Item Number	Description
1	Lead Wire Assy. (TB1 to TB2) (L1)
2	Lead Wire Assy. (TB1 to TB2) (L2)
3	Lead Wire Assy. (TB1 to TB2) (L3)
4	Lead Wire Assy. (TB1 to Booster Contactor) (L1)
5	Lead Wire Assy. (TB1 to Booster Contactor) (L2)
6	Lead Wire Assy. (TB1 to Booster Contactor) (L3)
7	Lead Wire Assy. (TB2 to Tank Contactor) (L1)
8	Lead Wire Assy. (TB2 to Tank Contactor) (L2)
9	Lead Wire Assy. (480 V.) (TB2 to Tank Contactor) (L3)
10	Lead Wire Assy. (Wash Contactor) (L1)
11	Lead Wire Assy. (Wash Contactor) (L2)
12	Lead Wire Assy. (480 V.) (Wash Contactor) (L3)
13	Lead Wire Assy. (DPS) (L1)
14	Lead Wire Assy. (DWT CU Relay In)
15	Lead Wire Assy. (Booster Cut Out)
16	Lead Wire Assy. (Tank Cut Out)
17	Lead Wire Assy. (Transformer) (L1)
18	Lead Wire Assy. (Transformer) (L2)
19	Lead Wire Assy. (DPS) (L2)
20	Lead Wire Assy. (Ground - Door)
21	Lead Wire Assy. (Vent In)
22	Lead Wire Assy. (Vent Out)
23	Lead Wire Assy. (480 V.) (RPS to TB3) (L2)
24	Lead Wire Assy. (SCB, Wash to Booster Toggle)
25	Lead Wire Assy. (480 V.) (RPS Relay) (L2)
26	Lead Wire Assy. (Neutral)
27	Lead Wire Assy. (DWT to TB3)
28	Lead Wire Assy. (ASR Left) (L1)
29	Lead Wire Assy. (ASR Left) (L2)
30	Lead Wire Assy. (SCB, Booster Tank Toggle)
31	Lead Wire Assy. (SCB, Wash Tank Toggle)
32	Lead Wire Assy. (480 V.) (Vent Relay Coil)
33	Lead Wire Assy. (480 V.) (Neutral Relays)
34	Lead Wire Assy. (480 V.) (CU Relays In)
35	Lead Wire Assy. (480 V.) (Vent In)
36	Lead Wire Assy. (480 V.) (Vent Out)
37	Lead Wire Assy. (480 V.) (RPS to Relay Coil)
38	Lead Wire Assy. (480 V.) (RPS Relay)
39	Lead Wire Assy. (480 V.) (RPS to TB3)
40	Lead Wire Assy. (480 V.) (L1 to TB5)
41	Lead Wire Assy. (L1 to TB4)
42	Lead Wire Assy. (L2 to TB4)
43	Lead Wire Assy. (RPS CU Relay In)
44	Lead Wire Assy. (RPS L1)
45	Lead Wire Assy. (RPS L2 Relay In)
46	Lead Wire Assy. (RPS L2 Relay Out)
47	Lead Wire Assy. (DWT, 120 V. Jumper)
48	Lead Wire Assy. (DWT, Neutral Jumper)
49	Lead Wire Assy. (RPS1 from CONT)
50	Lead Wire Assy. (480 V.) (DPS from CONT)

PL-61535

LEAD WIRE ASSEMBLIES

LEAD WIRE ASSEMBLIES

ILLUS. PL-61535	PART NO.	NAME OF PART	AMT.
1	00-563090-00001	Lead Wire Assy.	1
2	00-563090-00002	Lead Wire Assy.	1
3	00-563090-00003	Lead Wire Assy.	1
4	00-563090-00004	Lead Wire Assy.	1
5	00-563090-00005	Lead Wire Assy.	1
6	00-563090-00006	Lead Wire Assy.	1
7	00-563090-00007	Lead Wire Assy.	1
8	00-563090-00008	Lead Wire Assy.	1
9	00-563090-00009	Lead Wire Assy.	1
10	00-563090-00010	Lead Wire Assy.	1
11	00-563090-00011	Lead Wire Assy.	1
12	00-563090-00012	Lead Wire Assy.	1
13	00-563090-00013	Lead Wire Assy.	1
14	00-563090-00014	Lead Wire Assy.	1
15	00-563090-00015	Lead Wire Assy.	1
16	00-563090-00016	Lead Wire Assy.	1
17	00-563090-00017	Lead Wire Assy.	1
18	00-563090-00018	Lead Wire Assy.	1
19	00-563090-00019	Lead Wire Assy.	1
20	00-563090-00020	Lead Wire Assy.	1
21	00-563090-00021	Lead Wire Assy.	1
22	00-563090-00022	Lead Wire Assy.	1
23	00-563090-00023	Lead Wire Assy.	1
24	00-563090-00024	Lead Wire Assy.	1
25	00-563090-00025	Lead Wire Assy.	1
26	00-563090-00026	Lead Wire Assy.	1
27	00-563090-00027	Lead Wire Assy.	1
28	00-563090-00028	Lead Wire Assy.	1
29	00-563090-00029	Lead Wire Assy.	1
30	00-563090-00032	Lead Wire Assy.	1
31	00-563090-00033	Lead Wire Assy.	1
32	00-563090-00034	Lead Wire Assy.	1
33	00-563090-00035	Lead Wire Assy.	1
34	00-563090-00036	Lead Wire Assy.	1
35	00-563090-00037	Lead Wire Assy.	1
36	00-563090-00038	Lead Wire Assy.	1
37	00-563090-00039	Lead Wire Assy.	1
38	00-563090-00040	Lead Wire Assy.	1
39	00-563090-00041	Lead Wire Assy.	1
40	00-563090-00042	Lead Wire Assy.	1
41	00-563090-00043	Lead Wire Assy.	1
42	00-563090-00044	Lead Wire Assy.	1
43	00-563090-00045	Lead Wire Assy.	1
44	00-563090-00046	Lead Wire Assy.	1
45	00-563090-00047	Lead Wire Assy.	1
46	00-563090-00048	Lead Wire Assy.	1
47	00-563090-00050	Lead Wire Assy.	1
48	00-563090-00051	Lead Wire Assy.	1
49	00-563090-00052	Lead Wire Assy.	1
50	00-563090-00053	Lead Wire Assy.	1

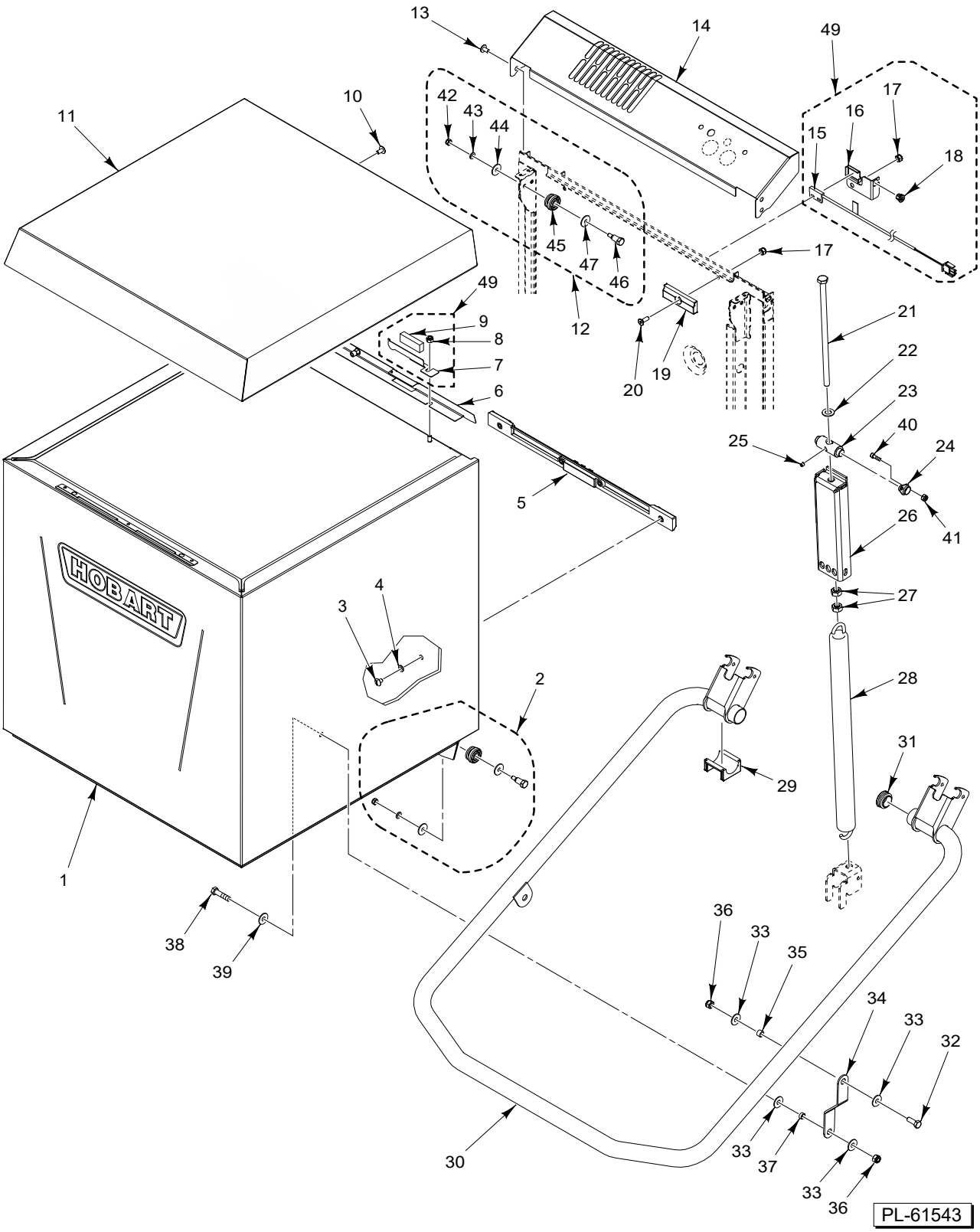

DOOR ASSEMBLY
(STANDARD HEIGHT)
(PREVIOUS CONSTRUCTION)

DOOR ASSEMBLY
(STANDARD HEIGHT)
(PREVIOUS CONSTRUCTION)

ILLUS. PL-61543	PART NO.	NAME OF PART	AMT.
1	00-974652-00002	Hood Weldment	1
2	00-974678	Roller Assy. (Incls. Items 42 thru 47)	2
3	SC-122-45	Mach. Screw 1/4-20 x 3/8 Slotted Truss Hd.	4
4	WL-006-17	Lockwasher 1/4 Helical (SST)	3
5	01-606666	Stop - Door	1
6	00-562314	Cover - Magnet	1
7	00-562129	Bracket - Magnet	1
8	NS-047-82	Stop Nut 1/4-20 Hex (SST)	2
9	00-290160	Magnet	1
10	SC-125-15	Mach. Screw 1/4-20 x 1/2 Phil. Truss Hd.	1
11	00-974682-00001	Top	1
12	00-974678	Roller Assy. (Incls. Items 42 thru 47)	2
13	SC-125-15	Mach. Screw 1/4-20 x 1/2 Phil. Truss Hd.	2
14	00-974683-00002	Cover - Top	1
15	00-941429-00002	Switch Assy. - Interlock	1
16	00-562534	Bracket - Mounting (Reed Switch)	1
17	NS-047-82	Stop Nut 1/4-20 Hex (SST)	2
18	FE-016-23	Bushing	1
19	00-562636	Stop - Door	2
20	SC-022-40	Mach. Screw 1/4-20 x 3/4 Phil. Flat Hd. (SST)	2
21	00-605253-00001	Bolt M10 x 240	2
22	WS-028-22	Washer (SST)	2
23	00-975312	Bearing - Tee Bolt	2
24	00-562726-00003	Bushing - Flanged	4
25	SC-055-02	Set Screw 1/4-20 x 1/4 Hex Hdls., Cup Pt. (SST)	2
26	00-974686-00001	Bracket - Spring Adjustment	2
27	NS-049-39	Nut M10 x 1.5 Hex	4
28	01-515929-00001	Spring	2
29	00-974689	Bushing	2
30	00-974670	Lift Arm Assy. (Incls. Items 31 thru 37)	1
31	00-918049	Plug - Lift Arm	2
32	SC-041-12	Cap Screw 5/16-18 x 7/8 Hex Hd. (SST)	2
33	WS-017-01	Washer 0.328 x 0.875 x 0.062	9
34	00-974674-00001	Linkage - Lift (Short)	2
35	00-893014-00001	Spacer Door Link (Upper)	2
36	NS-036-19	Stop Nut 5/16-18 Hex Special (SST)	4
37	00-893014-00002	Spacer - Door Link (Lower)	2
38	SC-041-12	Cap Screw 5/16-18 x 7/8 Hex Hd. (SST)	2
39	WS-017-01	Washer 0.328 x 0.875 x 0.062	2
40	SC-059-13	Cap Screw 8/32 x 1/2 Hex Socket Hd. (SST)	4
41	NS-031-08	Stop Nut 8-32 Special (SST)	4
42	NS-048-03	Stop Nut M6 (SST)	2
43	WL-006-17	Lockwasher 1/4 Helical (SST)	2
44	WS-003-45	Washer	2
45	00-562079	Roller	2
46	01-515535-00001	Shoulder Bolt 10mm x 15.7 x M6-1.0	2
47	WS-029-29	Washer (SST)	2
*48	00-918458-00001	Guide - Door	1
**49	01-606353	Kit - Door Switch Relocation	1

* Not Shown
** Use when replacing items 7, 9, 15, and 16 (If Needed)

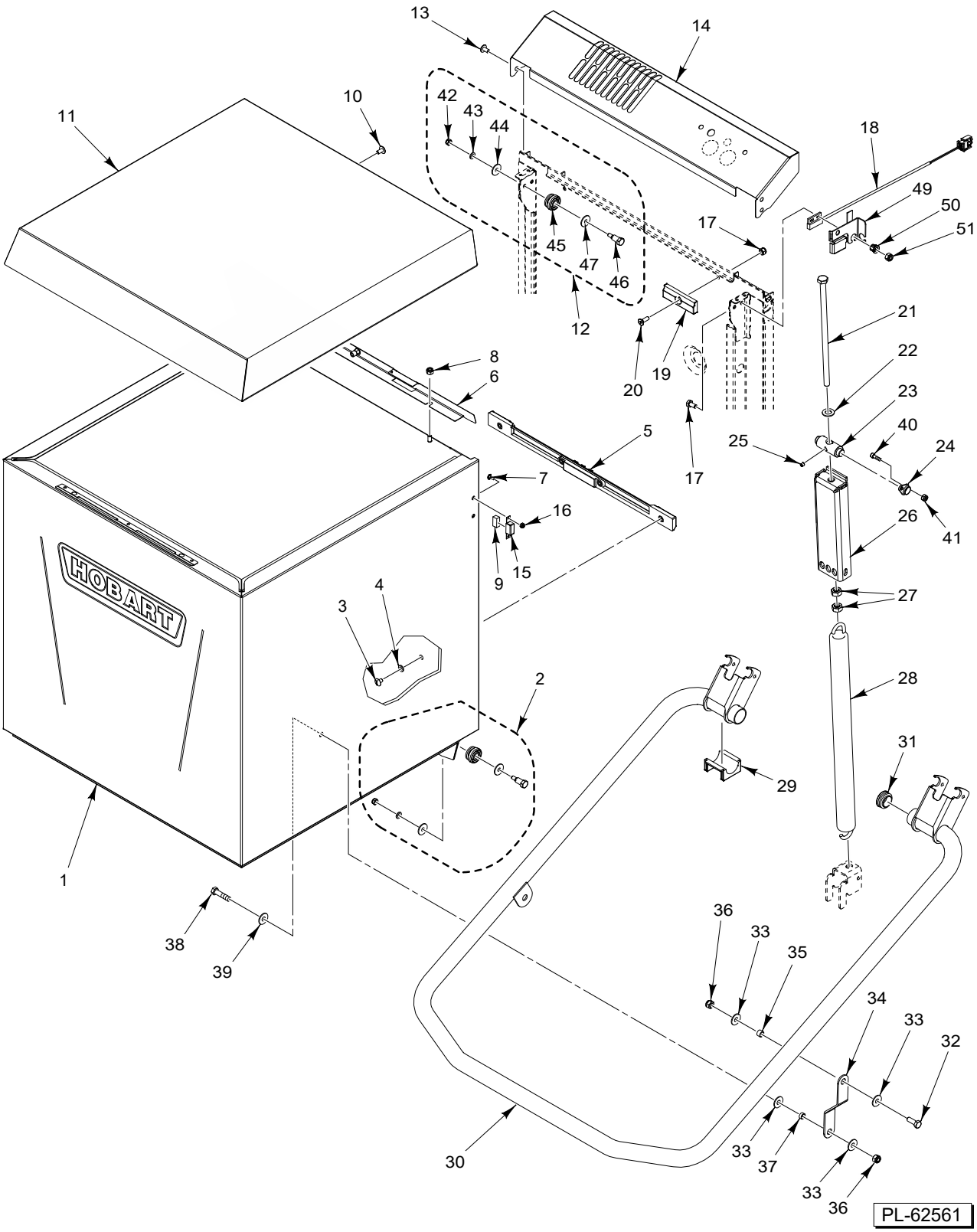

DOOR ASSEMBLY
(STANDARD HEIGHT)
(CURRENT CONSTRUCTION)

DOOR ASSEMBLY
(STANDARD HEIGHT)
(CURRENT CONSTRUCTION)

ILLUS. PL-62561	PART NO.	NAME OF PART	AMT.
1	00-974652-00002	Hood Weldment	1
2	00-974678	Roller Assy. (Incls. Items 42 thru 47)	2
3	SC-122-45	Mach. Screw 1/4-20 x 3/8 Slotted Truss Hd.	4
4	WL-006-17	Lockwasher 1/4 Helical (SST)	3
5	01-606666	Stop - Door	1
6	00-562314	Cover - Magnet	1
7	SC-066-03	Mach. Screw 6-32 x 1/2 Phil. Truss Hd. (SST)	2
8	NS-047-82	Stop Nut 1/4-20 Hex (SST)	2
9	00-111941	Magnet	1
10	SC-125-15	Mach. Screw 1/4-20 x 1/2 Phil. Truss Hd.	1
11	00-974682-00001	Top	1
12	00-974678	Roller Assy. (Incls. Items 42 thru 47)	2
13	SC-125-15	Mach. Screw 1/4-20 x 1/2 Phil. Truss Hd.	2
14	00-974683-00002	Cover - Top	1
15	00-893111	Magnet - Mount	1
16	NS-031-50	Stop Nut 6-32 Hex (SST)	2
17	SC-041-50	Cap Screw 1/4-20 x 1/2 Hex Hd. (SST)	1
18	FE-016-23	Bushing	1
19	00-941429-00002	Switch Assy. - Interlock	2
20	SC-022-40	Mach. Screw 1/4-20 x 3/4 Phil. Flat Hd. (SST)	2
21	00-605253-00001	Bolt M10 x 240	2
22	WS-028-22	Washer (SST)	2
23	00-975312	Bearing - Tee Bolt	2
24	00-562726-00003	Bushing - Flanged	4
25	SC-055-02	Set Screw 1/4-20 x 1/4 Hex Hdls., Cup Pt. (SST)	2
26	00-974686-00001	Bracket - Spring Adjustment	2
27	NS-049-39	Nut M10 x 1.5 Hex	4
28	01-515929-00001	Spring	2
29	00-974689	Bushing	2
30	00-974670	Lift Arm Assy. (Incls. Items 31 thru 37)	1
31	00-918049	Plug - Lift Arm	2
32	SC-041-12	Cap Screw 5/16-18 x 7/8 Hex Hd. (SST)	2
33	WS-017-01	Washer 0.328 x 0.875 x 0.062	9
34	00-974674-00001	Linkage - Lift (Short)	2
35	00-893014-00001	Spacer Door Link (Upper)	2
36	NS-036-19	Stop Nut 5/16-18 Hex Special (SST)	4
37	00-893014-00002	Spacer - Door Link (Lower)	2
38	SC-041-12	Cap Screw 5/16-18 x 7/8 Hex Hd. (SST)	2
39	WS-017-01	Washer 0.328 x 0.875 x 0.062	2
40	SC-059-13	Cap Screw 8/32 x 1/2 Hex Socket Hd. (SST)	4
41	NS-031-08	Stop Nut 8-32 Special (SST)	4
42	NS-048-03	Stop Nut M6 (SST)	2
43	WL-006-17	Lockwasher 1/4 Helical (SST)	2
44	WS-003-45	Washer	2
45	00-562079	Roller	2
46	01-515535-00001	Shoulder Bolt 10mm x 15.7 x M6-1.0	2
47	WS-029-29	Washer (SST)	2
48	00-918458-00001	Guide - Door	1
49	00-562534	Bracket - Mounting (Reed Switch)	1
50	FE-016-23	Bushing	1
51	NS-047-82	Stop Nut 1/4-20 Hex (SST)	1

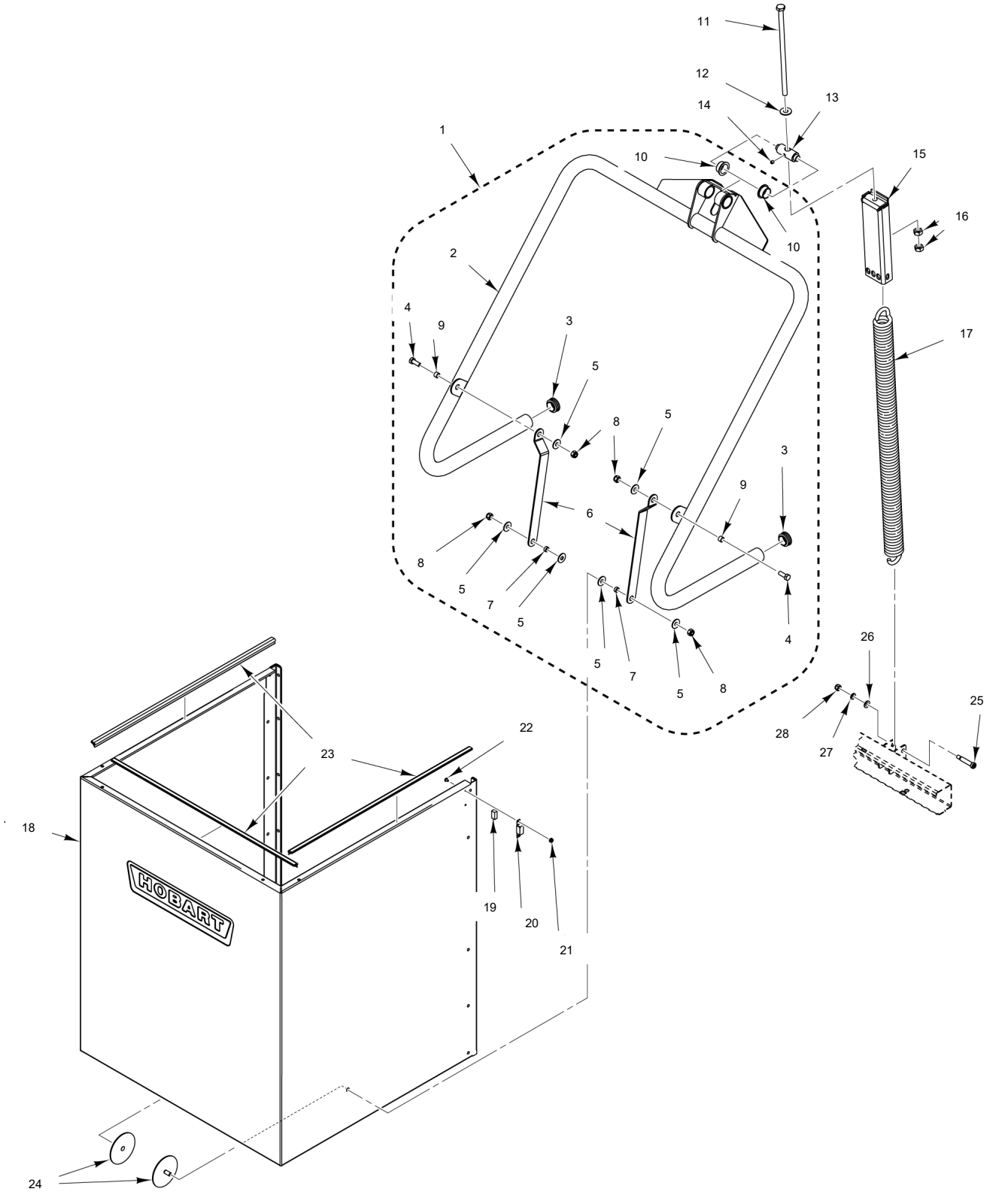

PL-61546

DOOR ASSEMBLY (HTS)

DOOR ASSEMBLY (HTS)

ILLUS. PL-61546	PART NO.	NAME OF PART	AMT.
1	01-606007	Lift Arm Assy (HTS) (Incls. Items 2 thru 10)	1
2	01-605994	Handle Lift Weldment (HTS)	AR
3	00-918049	Plug - Lift Arm	2
4	SC-041-12	Cap Screw 5/16-18 x 7/8 Hex Hd. (SST)	2
5	WS-017-01	Washer 0.328 x 0.875 x 0.062	9
6	00-974674-00002	Linkage - Lift (Long)	2
7	00-893014-00001	Spacer Door Link (Upper)	2
8	NS-036-19	Stop Nut 5/16-18 Hex Special (SST)	4
9	00-893014-00002	Spacer - Door Link (Lower)	2
10	00-562726-00001	Bushing	2
11	00-605253-00001	Bolt M10 x 240	1
12	WS-028-22	Washer (SST)	1
13	00-975312	Bearing - Tee Bolt	1
14	SC-055-02	Set Screw 1/4-20 x 1/4 Hex Hdls., Cup Pt. (SST)	1
15	00-974686-00001	Bracket - Spring Adjustment	1
16	NS-049-39	Nut M10 x 1.5 Hex	2
17	00-974688	Spring	1
18	00-975066	Door Wrap Weldment	1
19	00-111941	Magnet	1
20	00-893111	Magnet - Mount	1
21	NS-031-50	Stop Nut 6-32 Hex (SST)	2
22	SC-066-01	Mach. Screw 6-32 x 1/4 Phil. Truss Hd. (SST)	2
23	00-893834	Seal - Top Cover (Tall)	3
24	00-893226	Stiffener - Door Plate	2
25	SC-086-09	Shoulder Screw 3/8 Dia. x 1-1/2 Lg. 5/16-18 Hex Socket Hd.	1
26	WS-005-32	Washer (SST)	1
27	WL-006-23	Lockwasher 5/16 Helical (SST)	1
28	NS-036-19	Stop Nut 5/16-18 Hex Special (SST)	1

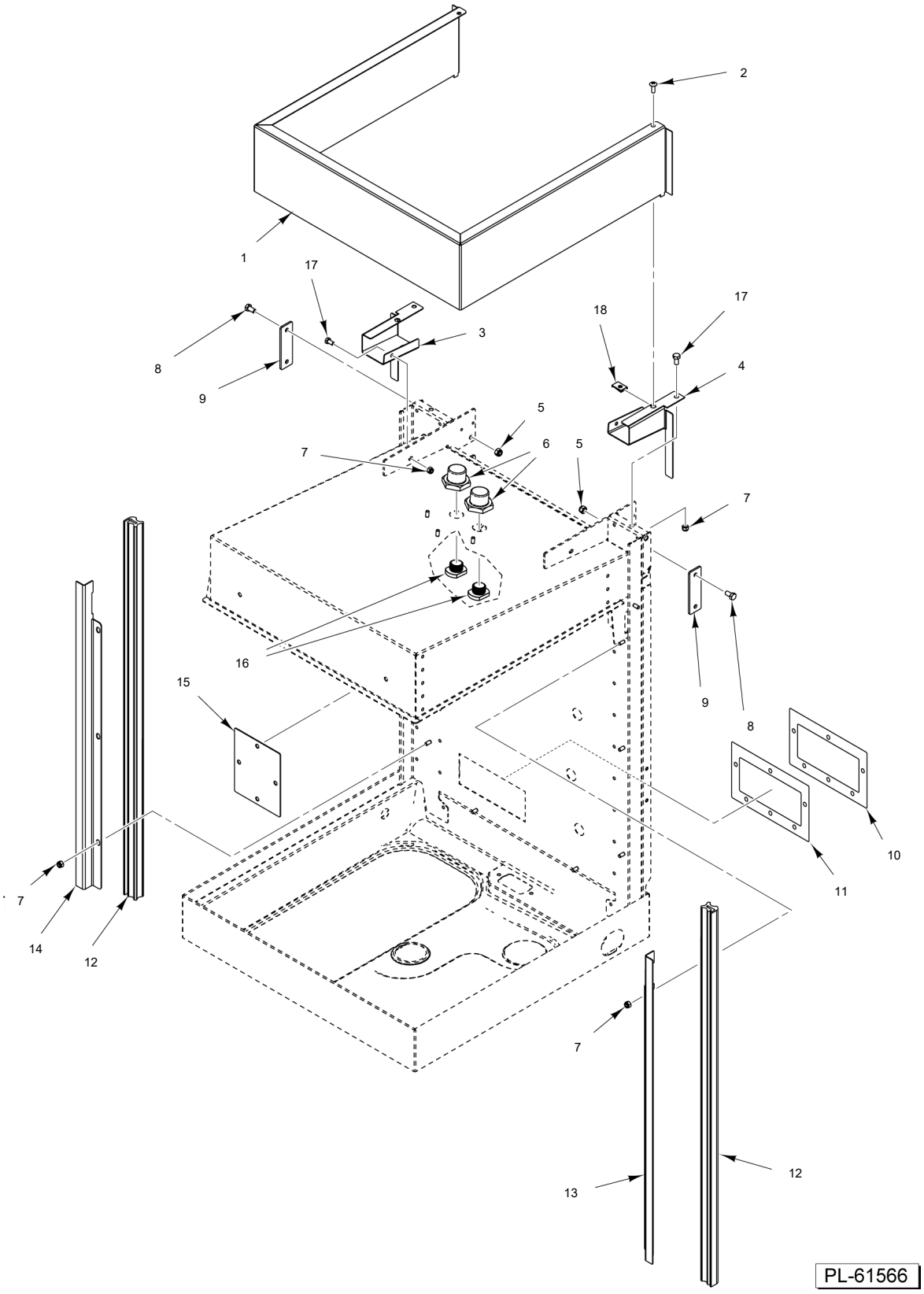

CHAMBER GUIDES AND TOP PANEL (HTS)

CHAMBER GUIDES AND TOP PANEL (HTS)

ILLUS. PL-61566	PART NO.	NAME OF PART	AMT.
1	00-975068-00001	Trim - Top	1
2	SC-131-81	Mach. Screw 1/4-20 x 3/4 Cross Truss Hd. (SST)	2
3	00-975495-00001	Bracket - Top (Left)	1
4	00-975495-00002	Bracket - Top (Right)	1
5	NS-036-19	Stop Nut 5/16-18 Hex Special (SST)	4
6	00-774670-00001	Intake	2
7	NS-047-82	Stop Nut 1/4-20 Hex (SST)	4
8	SC-041-10	Cap Screw 5/16-18 x 5/8 Hex Hd. (SST)	4
9	00-975497	Strut	2
10	00-563018	Cover (Non-Ventless)	1
11	00-562940	Gasket - Cover (Non-Ventless)	1
12	00-918458-00006	Guide - Door	2
13	00-975063-00002	Support - Guide (Right)	1
14	00-975063-00001	Support - Guide (Left)	1
15	00-562768	Cover (Non-Ventless)	1
16	01-531721-00001	Screwing R3/4	2
17	SC-041-05	Cap Screw 1/4-20 x 5/8 Hex Hd. (SST)	4
18	00-975045	Speed Nut 1/4-20 (SST)	2

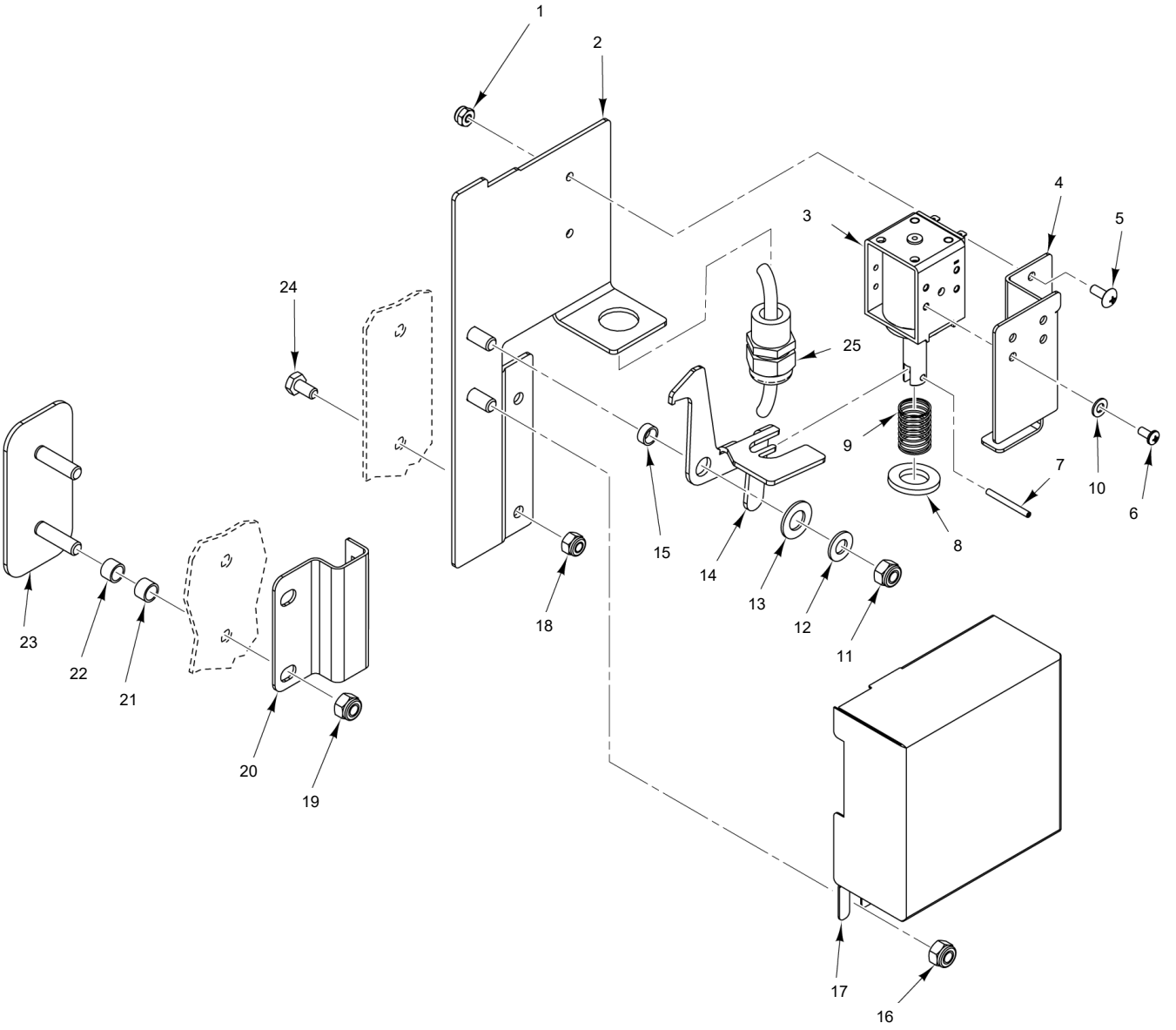

DOOR LOCK ASSEMBLY

DOOR LOCK ASSEMBLY

ILLUS. PL-61527	PART NO.	NAME OF PART	AMT.
1	NS-031-15	Stop Nut 10-24 Hex (SST)	2
2	00-562159	Plate - Solenoid	1
3	00-562710	Solenoid (24 VDC)	1
4	00-562160	Bracket - Solenoid	1
5	SC-066-06	Mach. Screw 10-24 x 1/2 Phil. Truss Hd. (SST)	2
6	SC-120-35	Mach. Screw 8-32 x 3/8 Phil. Pan Hd. (SST)	4
7	RP-003-47	Pin - Roll 1/8 In x 1-1/4 In. Lg.	1
8	WS-010-40	Washer - Thrust	1
9	00-941249	Spring	1
10	WL-006-01	Lockwasher #8 Helical (SST)	4
11	NS-036-19	Stop Nut 5/16-18 Hex Special (SST)	1
12	WS-005-32	Washer (SST)	1
13	WS-021-01	Washer (SST)	1
14	00-562162	Lock	1
15	00-893014-00002	Spacer - Bushing	1
16	NS-036-19	Stop Nut 5/16-18 Hex Special (SST)	1
17	00-562161	Cover - Receiver	1
18	NS-047-82	Stop Nut 1/4-20 Hex (SST)	2
19	NS-036-19	Stop Nut 5/16-18 Hex Special (SST)	2
20	00-941244	Receiver - Door	1
21	00-893014-00001	Spacer - Bushing (STD Only)	2
22	00-893014-00003	Spacer - Bushing	2
23	00-941247-00002	Plate - Mounting	1
24	SC-041-50	Cap Screw 1/4-20 x 1/2 Hex Hd. (SST)	2
25	00-563093-00003	Cable Assy. (Door Lock) (Incls. Strain Relief)	1

(ALL EXCEPT AM16SCB)

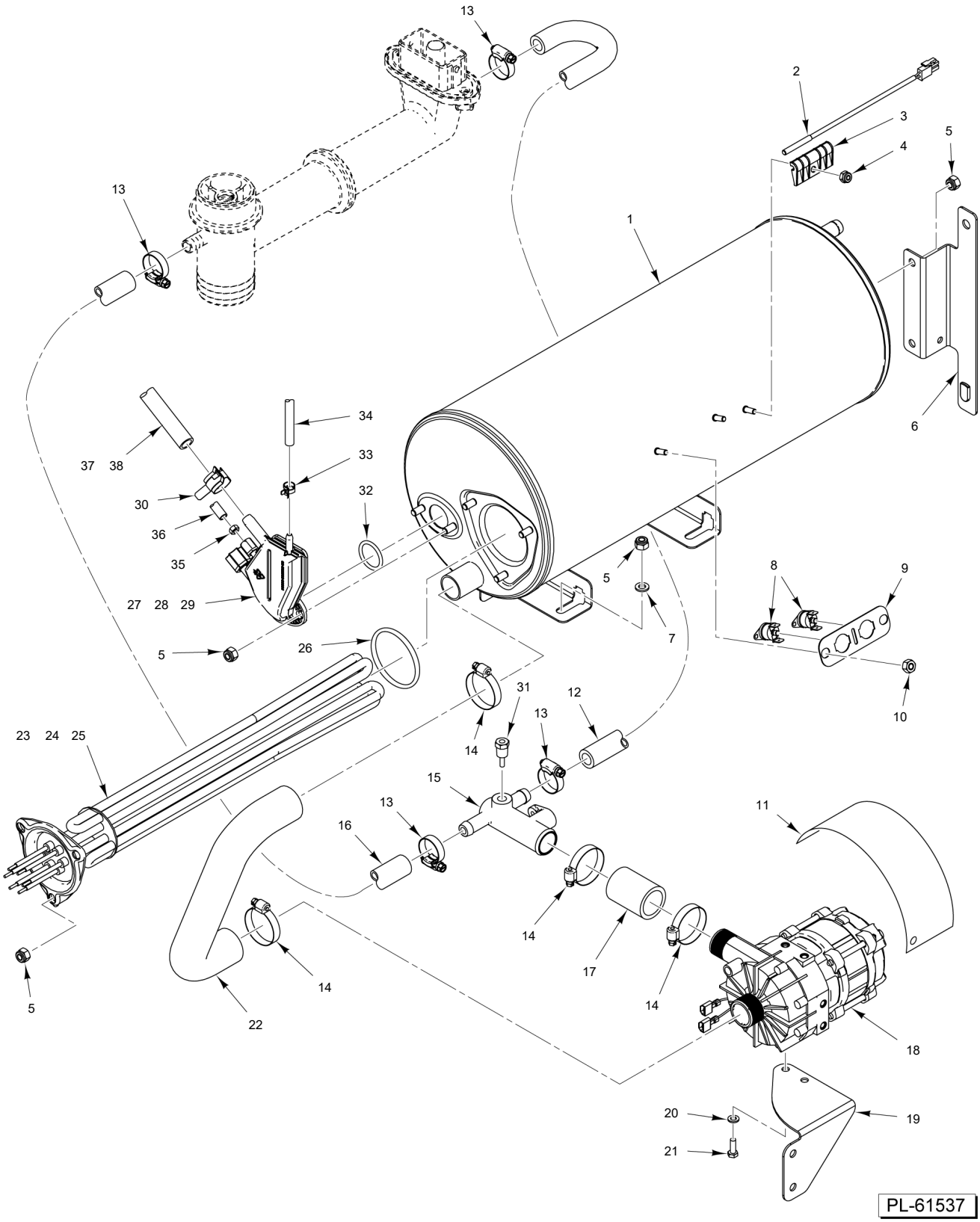

ELECTRIC BOOSTER AND RINSE PUMP

ELECTRIC BOOSTER AND RINSE PUMP

ILLUS. PL-61537	PART NO.	NAME OF PART	AMT.
1	00-950429	Booster	1
2	00-775612-00001	Sensor - Temperature	1
3	01-297719-00001	Bracket - Temp. Sensor	1
4	NS-031-15	Stop Nut 10-24 Hex (SST)	1
5	NS-047-82	Stop Nut 1/4-20 Hex (SST)	AR
6	00-947978-00001	Bracket - Booster	1
7	WS-022-01	Washer (SST)	4
8	00-942185	Protector - High Limit	2
9	00-941630	Bracket - High Limit	1
10	NS-031-15	Stop Nut 10-24 Hex (SST)	2
11	00-949691	Cover - Mylar (Rinse Pump)	1
12	00-562900	Hose	1
13	00-528499	Clamp - Hose	4
14	00-557627	Clamp - Hose	4
15	00-950546-00001	Manifold, Rinise, Hot	1
16	00-329017-00014	Hose	1
17	00-941731-00001	Hose - Outlet (1-3/4 In.)	1
18	00-942096-00007	Pump - Rinse, 208/240V 60 Hz	1
19	00-947979	Bracket - Rinse Pump	1
20	WL-006-17	Lockwasher 1/4 Helical (SST)	2
21	SC-118-47	Cap Screw M6 x 1.0 x 16mm Hex Hd.	2
22	00-950435	Hose (Rinse Pump)	1
23	00-562262-00001	Heater - Booster (208-240 V.) (9.5KW) (Incls. Wires, Terminals, and Item 26)	1
24	00-562262-00002	Heater - Booster (440-480 V.) (9.5KW) (Incls. Wires, Terminals, and Item 26)	1
25	00-562262-00003	Heater - Booster (380-415 V.) (9.5KW) (Incls. Wires, Terminals, and Item 26)	1
26	00-067500-00034	O-Ring (Included with Items 23, 24, & 25)	1
27	01-605772	Kit, Air Trap Service (Fill)	2
28	00-562608-00003	Fitting - Compression 1/4 In. (With Delime)	2
29	00-562608-00004	Fitting - Compression 1/4 In. (Blind Nut) (Without Delime)	2
30	00-558090	Clamp - Hose (17mm)	2
31	00-328994	Probe Assy. - Rinse	1
32	OR-001-21	O-Ring	1
33	01-246214-00003	Clamp	1
34	00-562965-00001	Tubing (33 In.)	1
35	00-562608-00001	Fitting - Compression 1/8 In.	1
36	00-563074-00004	Tube (1/8 O.D) (68 In.)	AR
37	00-941726-00019	Hose 3/8 (46 In. Lg.) (Base, Base Ventless, ASR)	1
38	00-941726-00025	Hose 3/8 (55 In. Lg.) (Advansys)	1

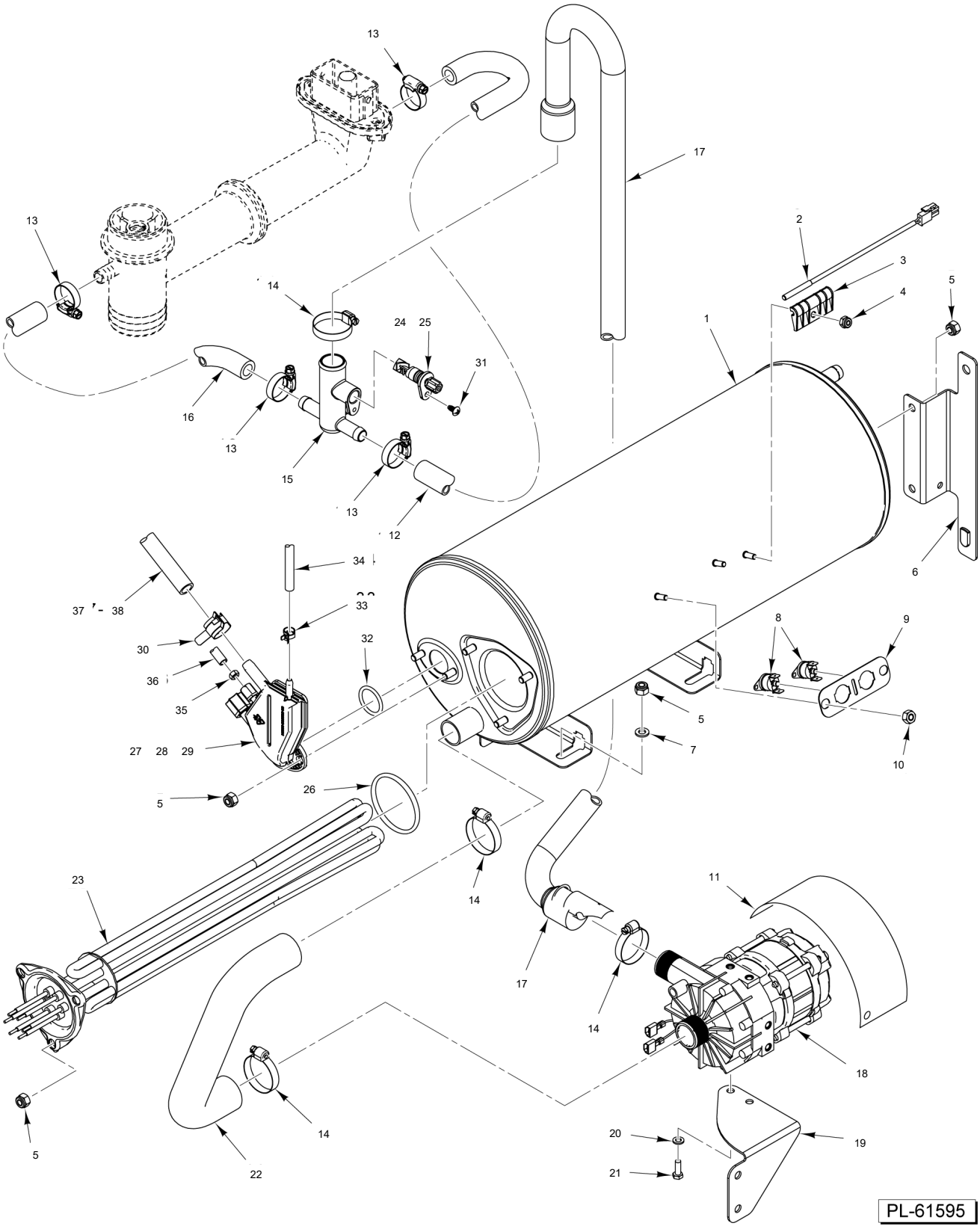

ELECTRIC BOOSTER AND RINSE PUMP (AM16SCB)

ELECTRIC BOOSTER AND RINSE PUMP (AM16SCB)

ILLUS. PL-61595	PART NO.	NAME OF PART	AMT.
1	00-950429	Booster	1
2	00-775612-00001	Sensor - Temperature	1
3	01-297719-00001	Bracket - Temp. Sensor	1
4	NS-031-15	Stop Nut 10-24 Hex (SST)	1
5	NS-047-82	Stop Nut 1/4-20 Hex (SST)	AR
6	00-947978-00001	Bracket - Booster	1
7	WS-022-01	Washer (SST)	4
8	00-942185	Protector - High Limit	2
9	00-941630	Bracket - High Limit	1
10	NS-031-15	Stop Nut 10-24 Hex (SST)	2
11	00-949691	Cover - Mylar (Rinse Pump)	1
12	00-562900	Hose	1
13	00-528499	Clamp - Hose	4
14	00-557627	Clamp - Hose	4
15	00-950546-00002	Manifold - Rinse (Chemical)	1
16	00-919977-00007	Hose - 1/2" PVC Rinse, 48"	1
17	00-562876	Hose (Rinse Pump)	1
18	00-942096-00007	Pump - Rinse, 208/240V 60 Hz	1
19	00-947979	Bracket - Rinse Pump	1
20	WL-006-17	Lockwasher 1/4 Helical (SST)	2
21	SC-118-47	Cap Screw M6 x 1.0 x 16mm Hex Hd.	2
22	00-950435	Hose (Rinse Pump)	1
23	00-562905	Heater - Booster (208-240 V.) (5.7KW) (Incls. Wires, Terminals, and Item 26)	1
24	00-950463-00004	Injector Assy. (Chemical Tee) (Incls. Item 25)	1
25		O-Ring (Included with Item 24	2
26	00-067500-00034	O-Ring (Included with Item 23)	1
27	01-605772	Kit, Air Trap Service (Fill)	2
28	00-562608-00003	Fitting - Compression 1/4 In. (With Delime)	2
29	00-562608-00004	Fitting - Compression 1/4 In. (Blind Nut) (Without Delime)	2
30	00-558090	Clamp - Hose (17mm)	2
31	SD-039-65	Self-Tapping Screw 10-16 x 3/8 Phil. Pan Hd., Type BF (SST)	1
32	OR-001-21	O-Ring	1
33	01-246214-00003	Clamp	1
34	00-562965-00001	Tubing (33 In.)	1
35	00-562608-00001	Fitting - Compression 1/8 In.	1
36	00-563074-00004	Tube (1/8 O.D) (68 In.)	AR
37	00-941726-00019	Hose 3/8 (46 In. Lg.) (Base, Base Ventless, ASR)	1
38	00-941726-00025	Hose 3/8 (55 In. Lg.) (Advansys)	1

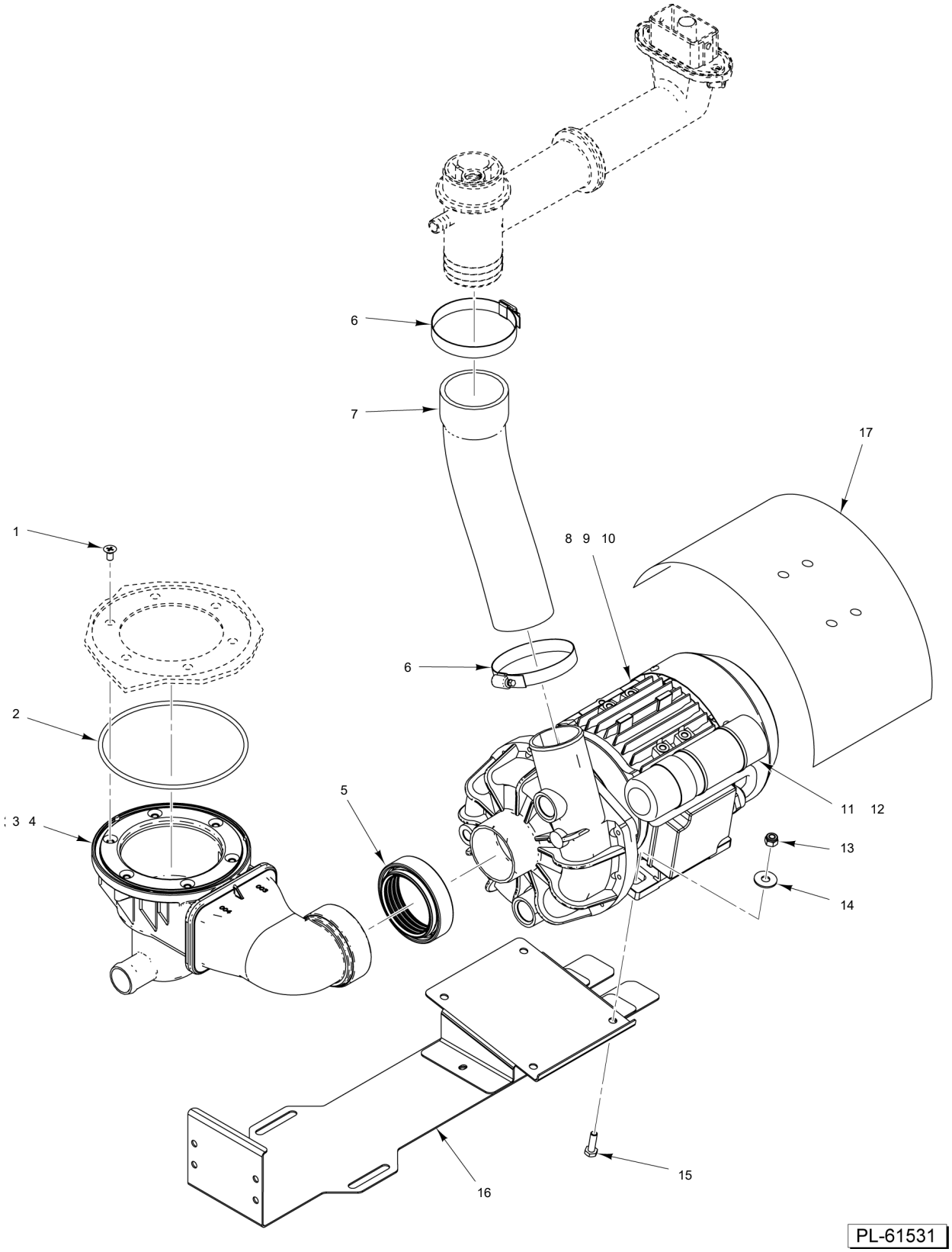

WASH PUMP ASSEMBLY

WASH PUMP ASSEMBLY

ILLUS. PL-61531	PART NO.	NAME OF PART	AMT.
1	SC-128-10	Mach. Screw M6 x 1 x 12 mm Phil. Flat Hd.	6
2	OR-001-25	O-Ring 137mm x 4mm	1
3	01-515652-00001	Flange - Tank	1
4	01-515652-00002	Flange - Tank (ASR)	1
5	01-515893-00001	Gasket (Green)	1
6	00-522162	Clamp - Hose	2
7	00-975498	Hose (Wash Output)	1
8	00-562075-00002	Motor - Pump (2 Hp.) (208-240 V. Units)	1
9	00-562075-00001	Motor - Pump (208V/240V - 480V, 3PH, 1.5HP) (380-415 V. Units)	1
10	00-562075-00001	Motor - Pump (208V/240V - 480V, 3PH, 1.5HP) (480 V. Units)	1
11	00-563017	Bracket (Used with Item 8)	1
12	00-941233-00014	Capacitor 1 Ph. (Used with Item 8)	1
13	NS-047-82	Stop Nut 1/4-20 Hex (SST)	2
14	WS-017-01	Washer 0.328 x 0.875 x 0.062	2
15	SC-109-47	Cap Screw 1/4-20 x 7/8 Hex Hd. (SST)	2
16	00-562535	Mount - Pump	1
17	00-563298	Cover - Mylar	1

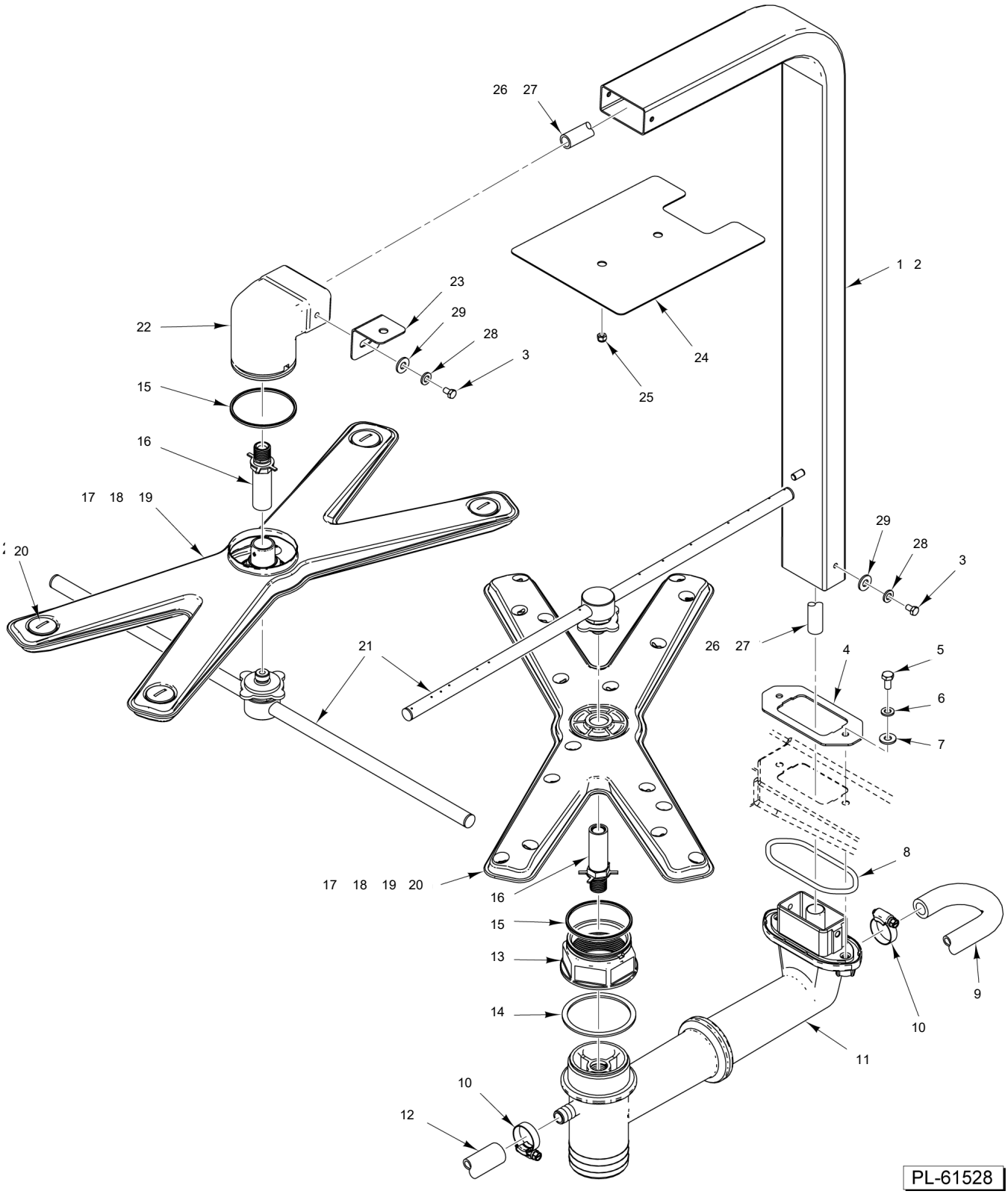

WASH AND RINSE ARM ASSEMBLY

WASH AND RINSE ARM ASSEMBLY

ILLUS. PL-61528	PART NO.	NAME OF PART	AMT.
1	00-975051-00001	Tube - Wash (STD)	1
2	00-975051-00002	Tube - Wash (HTS)	1
3	SC-131-97	Screw M5 x 12	4
4	00-562319	Plate, Manifold Reinforcement	1
5	SC-118-58	Cap Screw M6 x 1.0 x 12mm Hex Hd. (SST)	2
6	WL-006-17	Lockwasher 1/4 Helical (SST)	2
7	WS-017-06	Washer .281 x .625 x .062 (SST)	2
8	00-562320	Gasket - Manifold	1
9	00-562900	Hose	1
10	00-528499	Clamp - Hose	2
11	01-515649-00001	Manifold Assy.	1
12	00-329017-00014	Hose	1
13	00-948821-00002	Nut - Wash	1
14	00-948986-00001	Gasket - Wash Arm	1
15	00-562078	Ring - Retaining	2
16	00-562649	Shaft	2
17	00-975054	Wash Arm Assy. (Incls. Items 18, 19, & 20)	2
18	01-510678-00001	Nut - Wash Arm	2
19	00-975055	Guide - Wash Arm	2
20	01-605145	Kit - Plug & O-Ring (Wash Arm)	AR
21	01-605114	Rinse Arm Assy.	2
22	00-883466-00001	Hub, Upper Wash Arm	1
23	00-975060	Bracket - Support (HTS)	1
24	00-562318	Deflector (HTS)	1
25	NS-047-82	Stop Nut 1/4-20 Hex (SST) (HTS)	2
26	00-975052-00001	Pipe - Rinse (STD)	1
27	00-975052-00002	Pipe - Rinse (HTS)	1
28	WL-019-75	Lockwasher M10 5.1mm Helical (SST)	4
29	WS-030-64	Washer (SST)	4

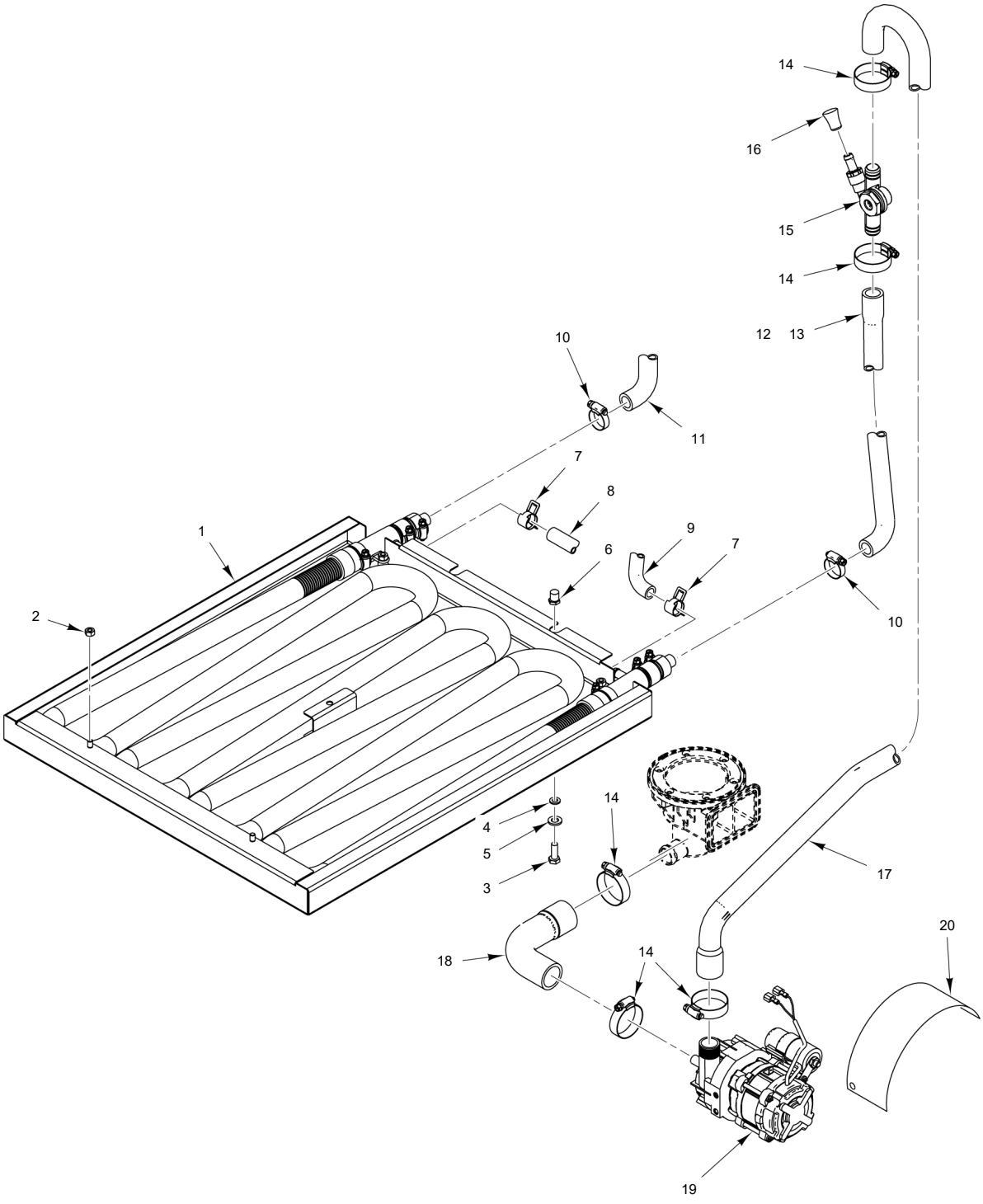

PL-61533

DRAIN AND DWER SYSTEM

DRAIN AND DWER SYSTEM

ILLUS. PL-61533	PART NO.	NAME OF PART	AMT.
1	00-562592	DWER Assy.	1
2	NS-047-82	Stop Nut 1/4-20 Hex (SST)	2
3	SC-041-05	Cap Screw 1/4-20 x 5/8 Hex Hd. (SST)	2
4	WL-006-17	Lockwasher 1/4 Helical (SST)	2
5	WS-017-06	Washer .281 x .625 x .062 (SST)	2
6	00-919364-00002	Rivnut 1/4-20	2
7	00-558090	Clamp - Hose (17mm)	2
8	00-941726-00025	Hose 3/8 (55 In. Lg.) (DWER to Booster)	1
9	00-941726-00024	Hose (DWER to Air Gap)	1
10	00-528499	Clamp - Hose	2
11	00-975240	Hose (DWER to Drain)	1
12	00-975241	Hose (Anti-Siphon to DWER) (ADV Plus, SVLT)	1
13	00-562652	Hose (Anti-Siphon to Drain) (Base, SCB, ASR)	1
14	00-558171	Clamp - Hose	5
15	01-240142-00001	Anti-Siphon	1
16	00-775531-00001	Plug	1
17	00-562176	Hose (Drain Pump to Anti-Siphon)	1
18	00-562175	Hose (Tank to Drain Pump)	1
19	00-942096-00004	Pump - Drain (208 - 240V, 60Hz)	1
20	00-949691	Cover - Mylar	1

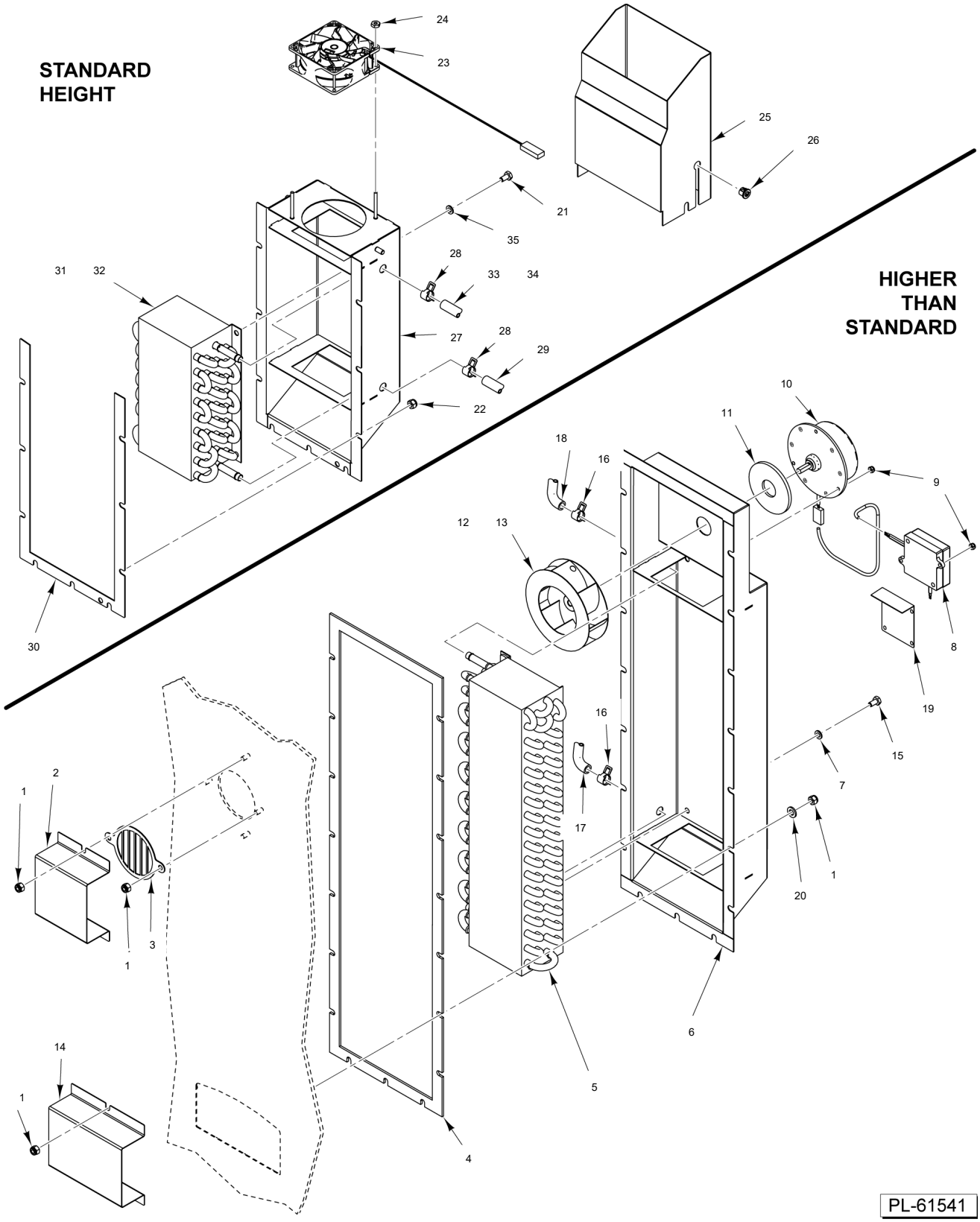

VENTLESS RECOVERY SYSTEM

VENTLESS RECOVERY SYSTEM

ILLUS. PL-61541	PART NO.	NAME OF PART	AMT.
1	NS-047-82	Stop Nut 1/4-20 Hex (SST) (HTS)	AR
2	00-562486	Cover (HTS)	1
3	00-562703	Cover - Vent (HTS)	1
4	00-562062	Gasket (HTS)	1
5	00-562702	Coil (HTS)	1
6	00-562297	Enclosure (HTS)	1
7	WL-006-17	Lockwasher 1/4 Helical (SST) (HTS)	2
8	00-562780	Controller (24VDC) (HTS)	1
9	NS-031-50	Stop Nut 6-32 Hex (SST) (HTS)	5
10	00-562180	Motor DC (HTS)	1
11	00-562228	Gasket (HTS)	1
12	00-562173	Impeller (HTS)	1
13	SC-117-84	Set Screw 1/4-20 x 5/16 Hex Hdls, Cup Pt (HTS)	1
14	00-562485	Guide (HTS)	1
15	SC-041-50	Cap Screw 1/4-20 x 1/2 Hex Hd. (SST) (HTS)	2
16	00-558090	Clamp - Hose (17mm) (HTS)	2
17	00-941726-00011	Hose 3/8 (62 In. Lg.) (HTS)	1
18	00-941726-00024	Hose (HTS)	1
19	00-563028	Bracket - Mounting (HTS)	1
20	WS-017-06	Washer .281 x .625 x .062 (SST) (HTS)	AR
21	SC-041-50	Cap Screw 1/4-20 x 1/2 Hex Hd. (SST) (STD)	2
22	NS-047-82	Stop Nut 1/4-20 Hex (SST) (STD)	AR
23	00-975453	Fan (24 V.) (STD)	1
24	NS-031-08	Stop Nut 8-32 Special (SST) (STD)	4
25	00-562698	Cover - Exhaust (STD)	1
26	FE-016-23	Bushing (STD)	1
27	00-975341	Enclosure - Coil (STD)	1
28	00-558090	Clamp - Hose (17mm) (STD)	2
29	00-941726-00011	Hose 3/8 (62 In. Lg.) (STD)	1
30	00-975457	Gasket - Housing (STD)	1
31	00-974622-00002	Coil (STD)	1
32	00-562928-00002	Coil (STD) (SCB)	1
33	00-941726-00007	Hose 3/8 (15 In. Lg.) (AM16VL) (STD)	1
34	00-941726-00018	Hose 3/8 (96 In. Lg.) (AM16SCB) (STD)	1
35	WL-006-17	Lockwasher 1/4 Helical (SST) (STD)	2

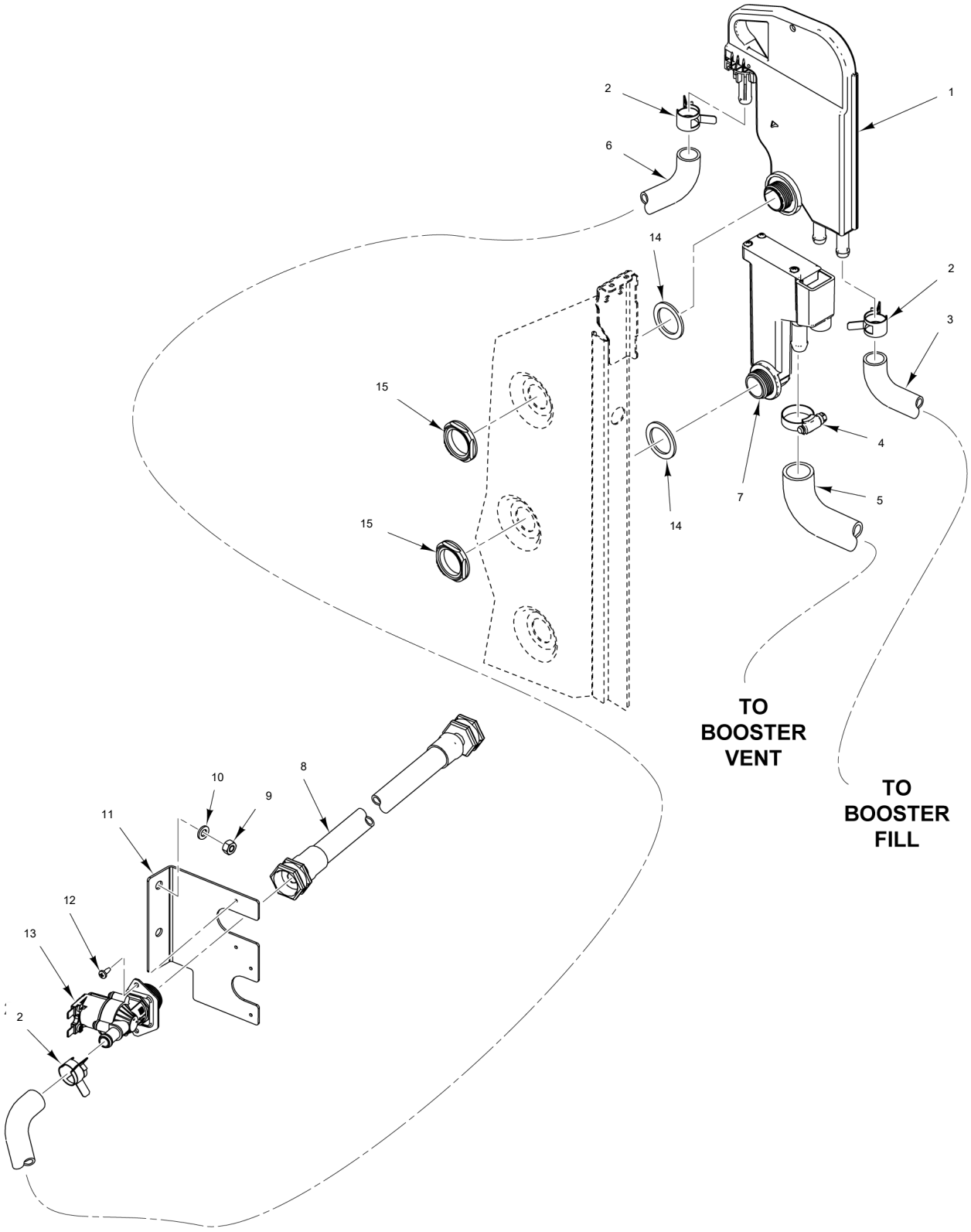

PL-61544

WATER FILL AND AIR GAP (BASE)

WATER FILL AND AIR GAP (BASE)

ILLUS. PL-61544	PART NO.	NAME OF PART	AMT.
1	01-297510-00001	Air Gap Assy.	1
2	00-558090	Clamp - Hose (17mm)	AR
3	00-941726-00019	Hose 3/8 (46 In. Lg.) (Air Gap to Booster Fill)	1
4	00-528499	Clamp - Hose	AR
5	00-329017-00003	Hose 1/2 x 19-3/8 (Manifold to Booster Vent)	1
6	00-941726-00011	Hose 3/8 (62 In. Lg.) (Air Gap to Fill Valve)	1
7	00-948624-00001	Manifold - Fill	1
8	00-293408-00002	Hose - Fill Assy.	1
9	NS-015-01	Nut 1/4-20 Hex (SST)	2
10	WL-006-17	Lockwasher 1/4 Helical (SST)	2
11	00-975300	Bracket - Fill	1
12	SC-124-99	Mach. Screw M4 x 0.7 x 6mm Phil. Truss Hd.	2
13	00-563072-00002	Valve - RPE (15 L/Min) (15 L/Min) (Green Inlet Restrictor)	1
14	00-941940	Gasket - Air Gap	2
15	00-974952	Nut - Buttress 1-14	2

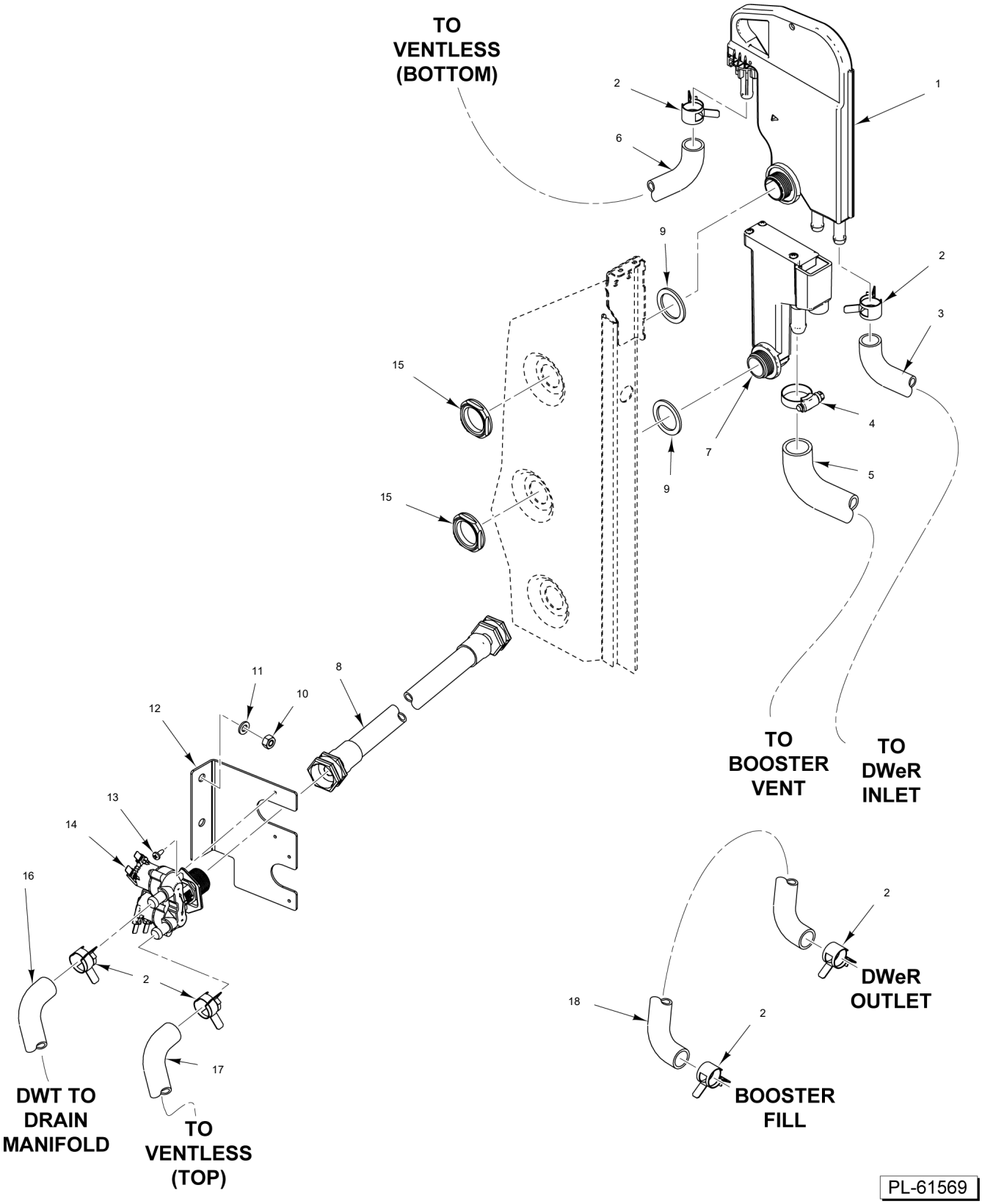

WATER FILL AND AIR GAP
(VL-ADV) (STD)

WATER FILL AND AIR GAP
(VL-ADV) (STD)

ILLUS. PL-61569	PART NO.	NAME OF PART	AMT.
1	01-297510-00001	Air Gap Assy.	1
2	00-558090	Clamp - Hose (17mm)	AR
3	00-941726-00024	Hose (Air Gap to DWeR Inlet)	1
4	00-528499	Clamp - Hose	AR
5	00-329017-00003	Hose 1/2 x 19-3/8 (Fill Manifold to Booster Vent)	1
6	00-941726-00007	Hose 3/8 (15 In. Lg.) (Air Gap to Ventless)	1
7	00-948624-00001	Manifold - Fill	1
8	00-293408-00002	Hose - Fill Assy.	1
9	00-941940	Gasket - Air Gap	2
10	NS-015-01	Nut 1/4-20 Hex (SST)	2
11	WL-006-17	Lockwasher 1/4 Helical (SST)	2
12	00-975300	Bracket - Fill	1
13	SC-124-99	Mach. Screw M4 x 0.7 x 6mm Phil. Truss Hd.	4
14	00-563073-00003	Valve - Dual RPE Valve - Dual	1
15	00-974952	Nut - Buttress 1-14	2
16	00-941726-00018	Hose 3/8 (96 In. Lg.) (DWT to Drain Manifold)	1
17	00-941726-00011	Hose 3/8 (62 In. Lg.) (Fill Valve to Ventless)	1
18	00-941726-00025	Hose 3/8 (55 In. Lg.) (DWeR Outlet to Booster Fill)	1

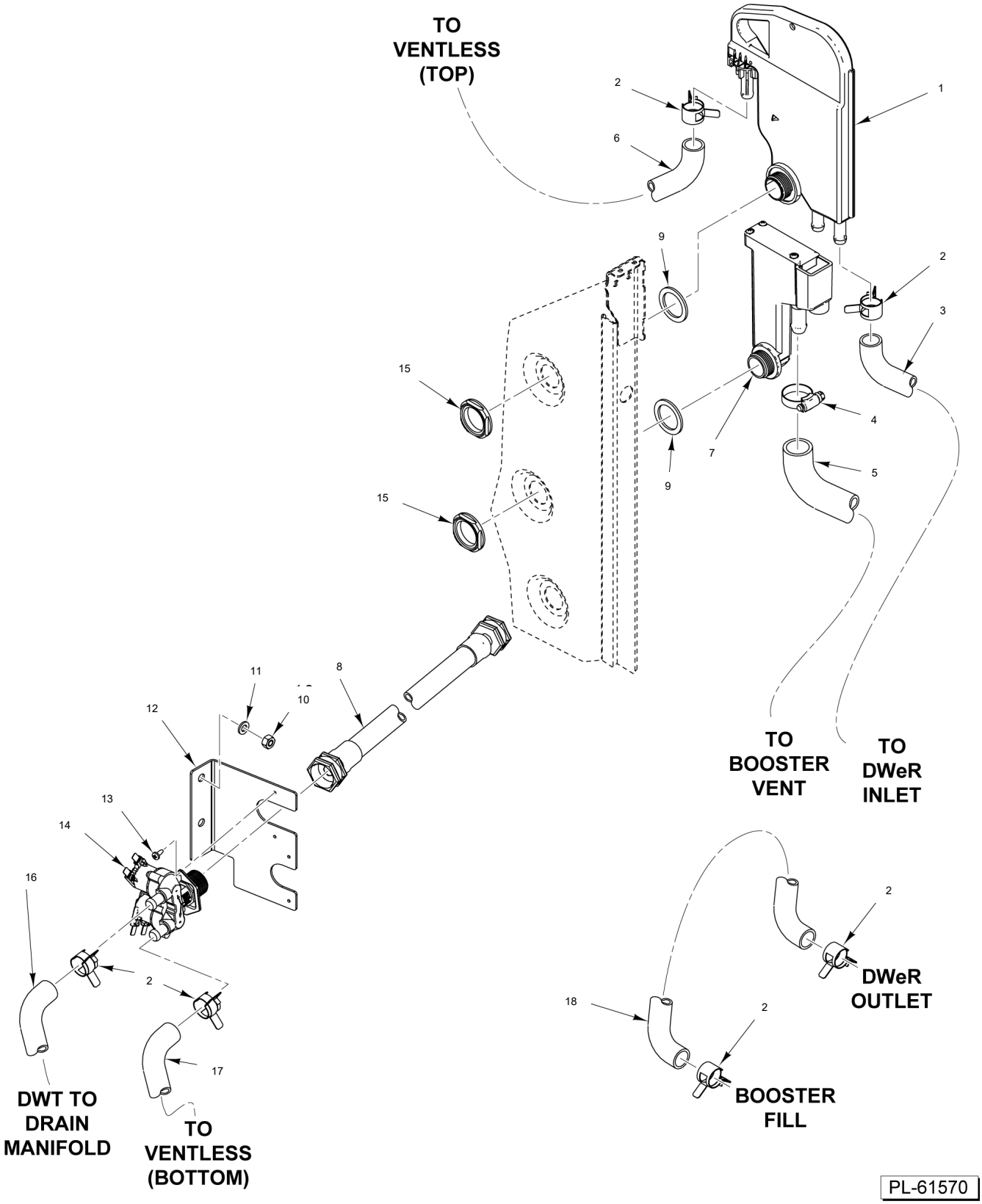

WATER FILL AND AIR GAP
(VL-ADV) (HTS)

WATER FILL AND AIR GAP
(VL-ADV) (HTS)

ILLUS. PL-61570	PART NO.	NAME OF PART	AMT.
1	01-297510-00001	Air Gap Assy.	1
2	00-558090	Clamp - Hose (17mm)	AR
3	00-941726-00024	Hose (Air Gap to DWeR Inlet)	1
4	00-528499	Clamp - Hose	AR
5	00-329017-00003	Hose 1/2 x 19-3/8 (Fill Manifold to Booster Vent)	1
6	00-941726-00024	Hose (Air Gap to Ventless)	1
7	00-948624-00001	Manifold - Fill	1
8	00-293408-00002	Hose - Fill Assy.	1
9	00-941940	Gasket - Air Gap	2
10	NS-015-01	Nut 1/4-20 Hex (SST)	2
11	WL-006-17	Lockwasher 1/4 Helical (SST)	2
12	00-975300	Bracket - Fill	1
13	SC-124-99	Mach. Screw M4 x 0.7 x 6mm Phil. Truss Hd.	4
14	00-563073-00003	Valve - Dual RPE Valve - Dual	1
15	00-974952	Nut - Buttress 1-14	2
16	00-941726-00018	Hose 3/8 (96 In. Lg.) (DWT to Drain Manifold)	1
17	00-941726-00011	Hose 3/8 (62 In. Lg.) (Fill Valve to Ventless)	1
18	00-941726-00025	Hose 3/8 (55 In. Lg.) (DWeR Outlet to Booster Fill)	1

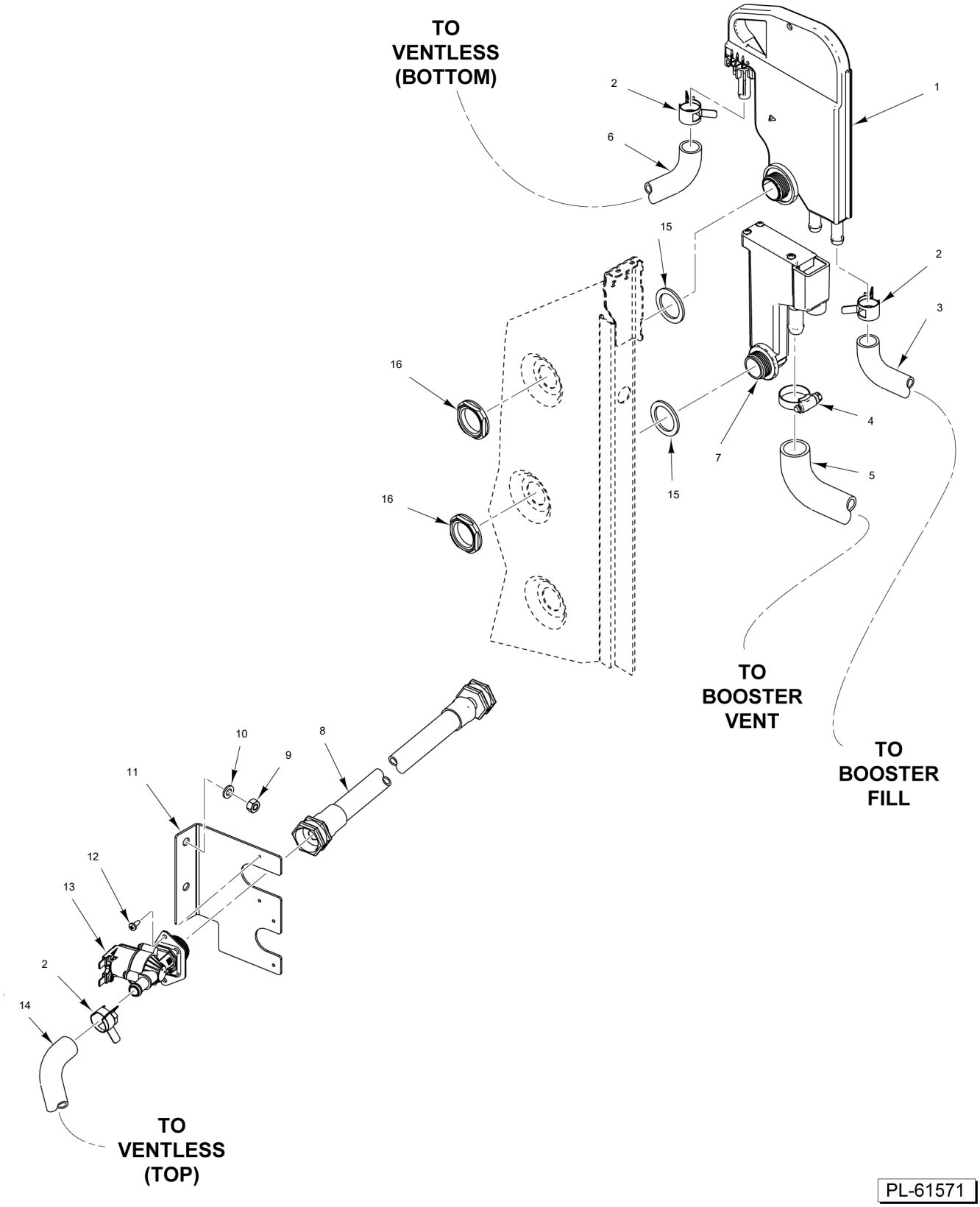

WATER FILL AND AIR GAP (VENTLESS) (STD)

WATER FILL AND AIR GAP (VENTLESS) (STD)

ILLUS. PL-61571	PART NO.	NAME OF PART	AMT.
1	01-297510-00001	Air Gap Assy.	1
2	00-558090	Clamp - Hose (17mm)	AR
3	00-941726-00019	Hose 3/8 (46 In. Lg.) (Air Gap to Booster Fill)	1
4	00-528499	Clamp - Hose	AR
5	00-329017-00003	Hose 1/2 x 19-3/8 (Fill Manifold to Booster Vent)	1
6	00-941726-00007	Hose 3/8 (15 In. Lg.) (Air Gap to Ventless)	1
7	00-948624-00001	Manifold - Fill	1
8	00-293408-00002	Hose - Fill Assy.	1
9	NS-015-01	Nut 1/4-20 Hex (SST)	2
10	WL-006-17	Lockwasher 1/4 Helical (SST)	2
11	00-975300	Bracket - Fill	1
12	SC-124-99	Mach. Screw M4 x 0.7 x 6mm Phil. Truss Hd.	2
13	00-563072-00001	Valve (5 L/Min) (Blue Inlet Restrictor)	1
14	00-941726-00011	Hose 3/8 (62 In. Lg.) (Fill Valve to Ventless)	1
15	00-941940	Gasket - Air Gap	2
16	00-974952	Nut - Buttress 1-14	2

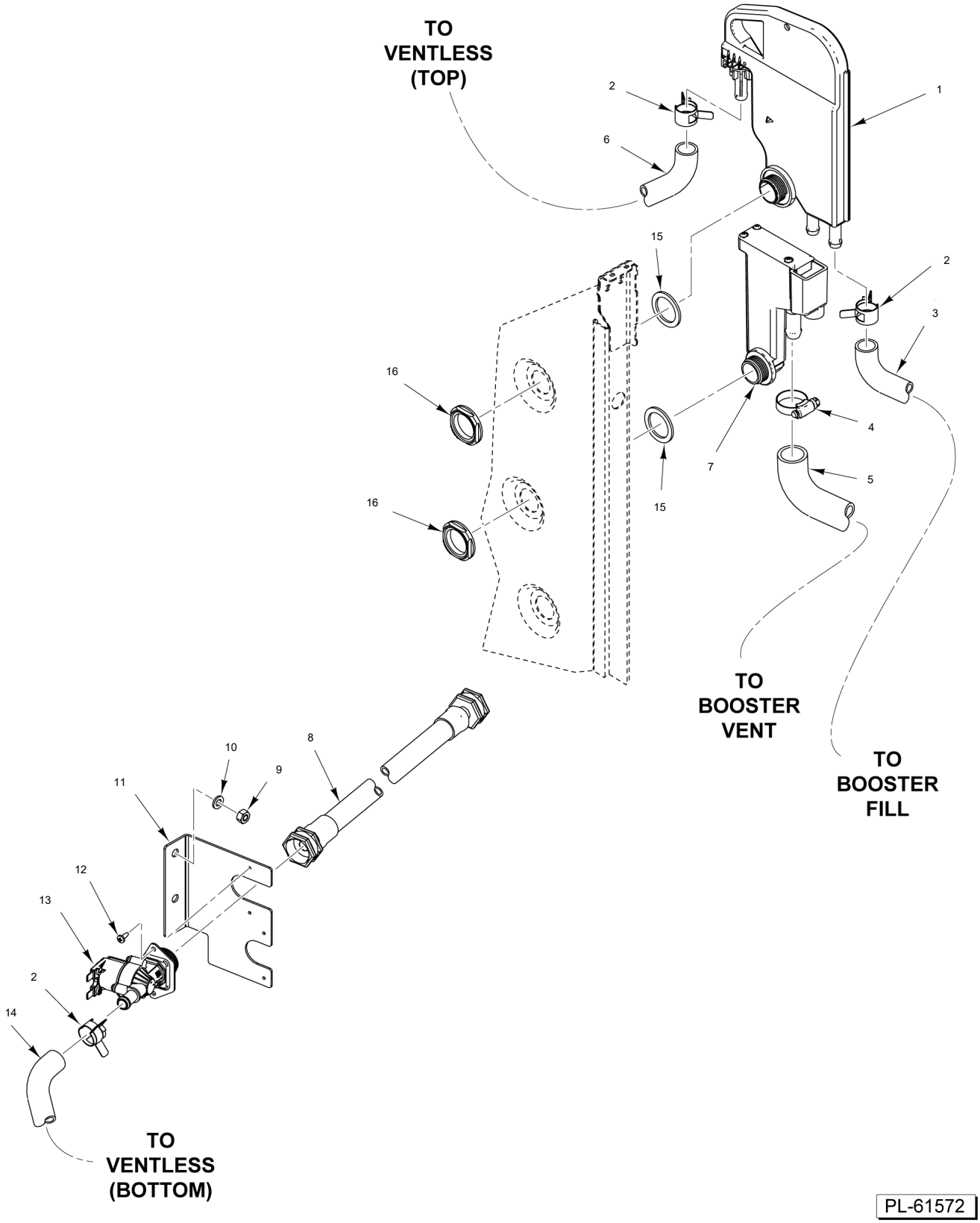

WATER FILL AND AIR GAP (VENTLESS) (HTS)

WATER FILL AND AIR GAP (VENTLESS) (HTS)

ILLUS. PL-61572	PART NO.	NAME OF PART	AMT.
1	01-297510-00001	Air Gap Assy.	1
2	00-558090	Clamp - Hose (17mm)	AR
3	00-941726-00019	Hose 3/8 (46 In. Lg.) (Air Gap to Booster Fill)	1
4	00-528499	Clamp - Hose	AR
5	00-329017-00003	Hose 1/2 x 19-3/8 (Fill Manifold to Booster Vent)	1
6	00-941726-00024	Hose (Air Gap to Ventless)	1
7	00-948624-00001	Manifold - Fill	1
8	00-293408-00002	Hose - Fill Assy.	1
9	NS-015-01	Nut 1/4-20 Hex (SST)	2
10	WL-006-17	Lockwasher 1/4 Helical (SST)	2
11	00-975300	Bracket - Fill	1
12	SC-124-99	Mach. Screw M4 x 0.7 x 6mm Phil. Truss Hd.	2
13	00-563072-00001	Valve (5 L/Min) (Blue Inlet Restrictor)	1
14	00-941726-00011	Hose 3/8 (62 In. Lg.) (Fill Valve to Ventless)	1
15	00-941940	Gasket - Air Gap	2
16	00-974952	Nut - Buttress 1-14	2

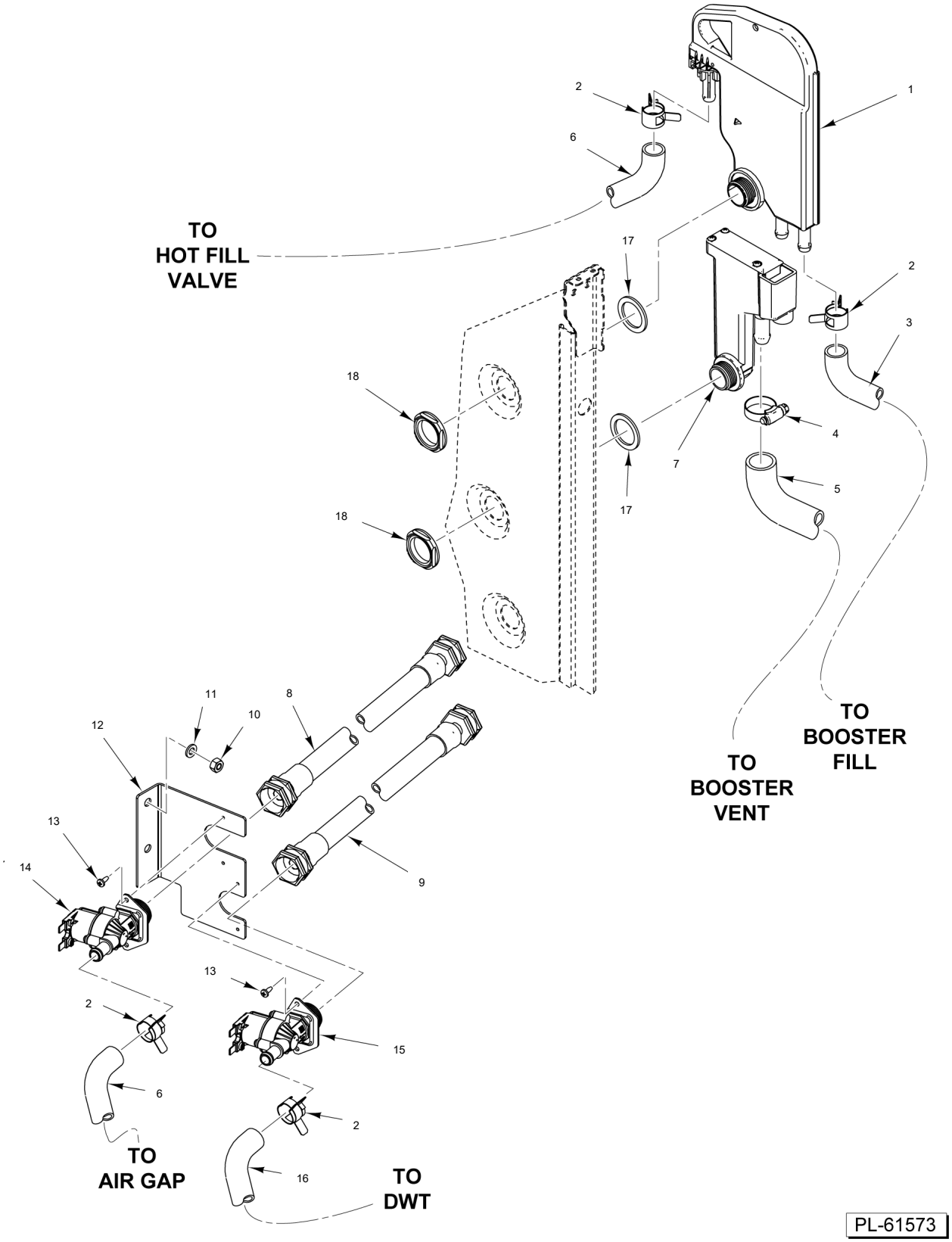

WATER FILL AND AIR GAP (ASR)

WATER FILL AND AIR GAP (ASR)

ILLUS. PL-61573	PART NO.	NAME OF PART	AMT.
1	01-297510-00001	Air Gap Assy.	1
2	00-558090	Clamp - Hose (17mm)	AR
3	00-941726-00019	Hose 3/8 (46 In. Lg.) (Air Gap to Booster Fill)	1
4	00-528499	Clamp - Hose	AR
5	00-329017-00003	Hose 1/2 x 19-3/8 (Fill Manifold to Booster Vent)	1
6	00-941726-00011	Hose 3/8 (62 In. Lg.) (Air Cap to Hot Fill Valve)	1
7	00-948624-00001	Manifold - Fill	1
8	00-293408-00002	Hose - Fill Assy.	1
9	00-293408-00002	Hose - Fill Assy.	1
10	NS-015-01	Nut 1/4-20 Hex (SST)	2
11	WL-006-17	Lockwasher 1/4 Helical (SST)	2
12	00-975300	Bracket - Fill	1
13	SC-124-99	Mach. Screw M4 x 0.7 x 6mm Phil. Truss Hd.	2
14	00-563072-00002	Valve - RPE (15 L/Min) (15 L/Min) (Green Inlet Restrictor)	1
15	00-563072-00002	Valve - RPE (15 L/Min) (15 L/Min) (Green Inlet Restrictor)	1
16	00-941726-00018	Hose 3/8 (96 In. Lg.) (Cold Fill Valve to DWT)	1
17	00-941940	Gasket - Air Gap	2
18	00-974952	Nut - Buttress 1-14	2

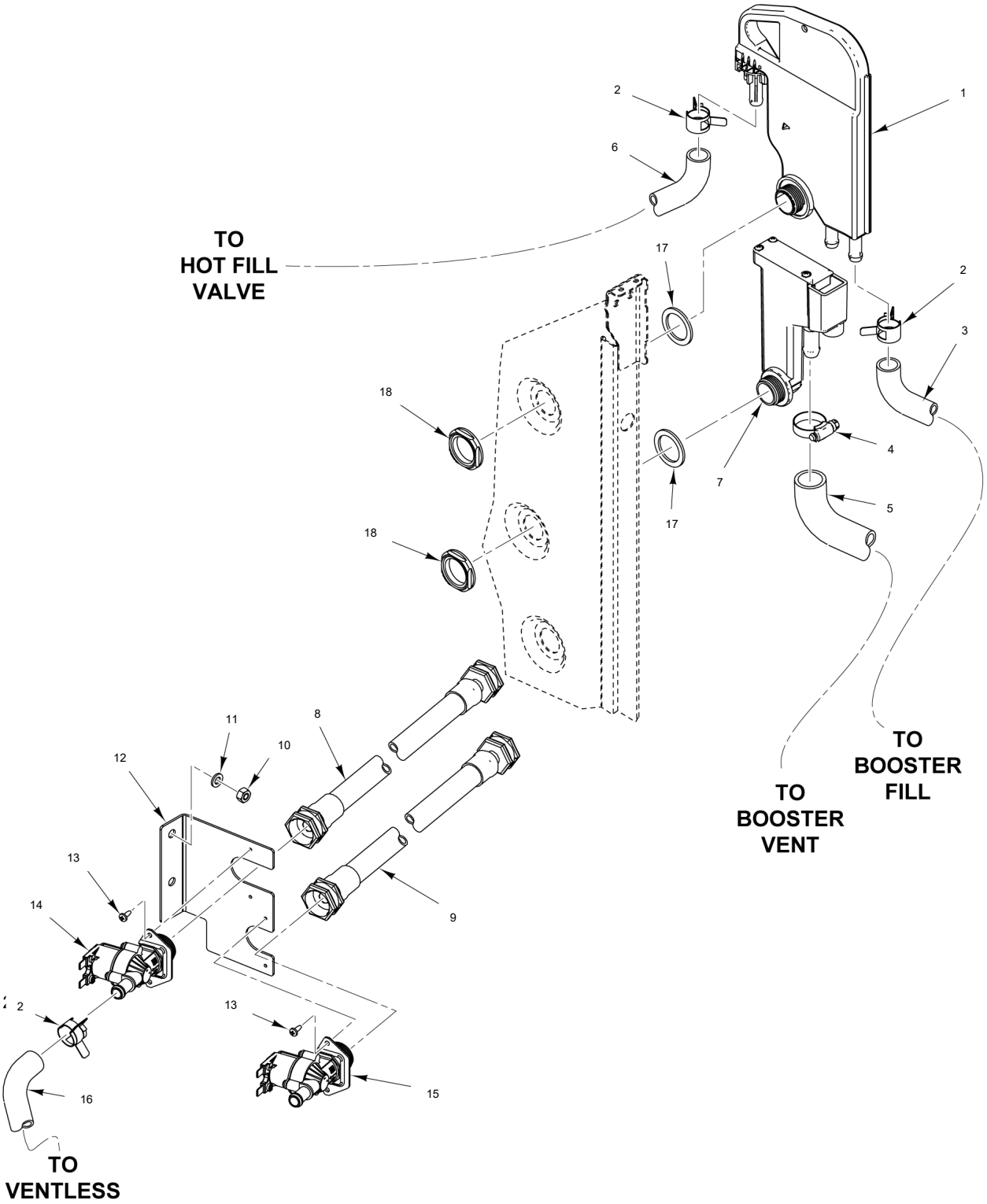

PL-61574

WATER FILL AND AIR GAP
(VENTLESS) (SCB)

WATER FILL AND AIR GAP (VENTLESS) (SCB)

ILLUS. PL-61574	PART NO.	NAME OF PART	AMT.
1	01-297510-00001	Air Gap Assy.	1
2	00-558090	Clamp - Hose (17mm)	AR
3	00-941726-00019	Hose 3/8 (46 In. Lg.) (Air Gap to Booster Fill)	1
4	00-528499	Clamp - Hose	AR
5	00-329017-00003	Hose 1/2 x 19-3/8 (Fill Manifold to Booster Vent)	1
6	00-941726-00011	Hose 3/8 (62 In. Lg.) (Air Gap to Hot Fill Valve)	1
7	00-948624-00001	Manifold - Fill	1
8	00-293408-00002	Hose - Fill Assy.	1
9	00-293408-00002	Hose - Fill Assy.	1
10	NS-015-01	Nut 1/4-20 Hex (SST)	2
11	WL-006-17	Lockwasher 1/4 Helical (SST)	2
12	00-975300	Bracket - Fill	1
13	SC-124-99	Mach. Screw M4 x 0.7 x 6mm Phil. Truss Hd.	4
14	00-563072-00001	Valve (5 L/Min) (Blue Inlet Restrictor)	1
15	00-563072-00002	Valve - RPE (15 L/Min) (15 L/Min) (Green Inlet Restrictor)	1
16	00-941726-00011	Hose 3/8 (62 In. Lg.) (Cold Fill Valve to Ventless)	1
17	00-941940	Gasket - Air Gap	2
18	00-974952	Nut - Buttress 1-14	2

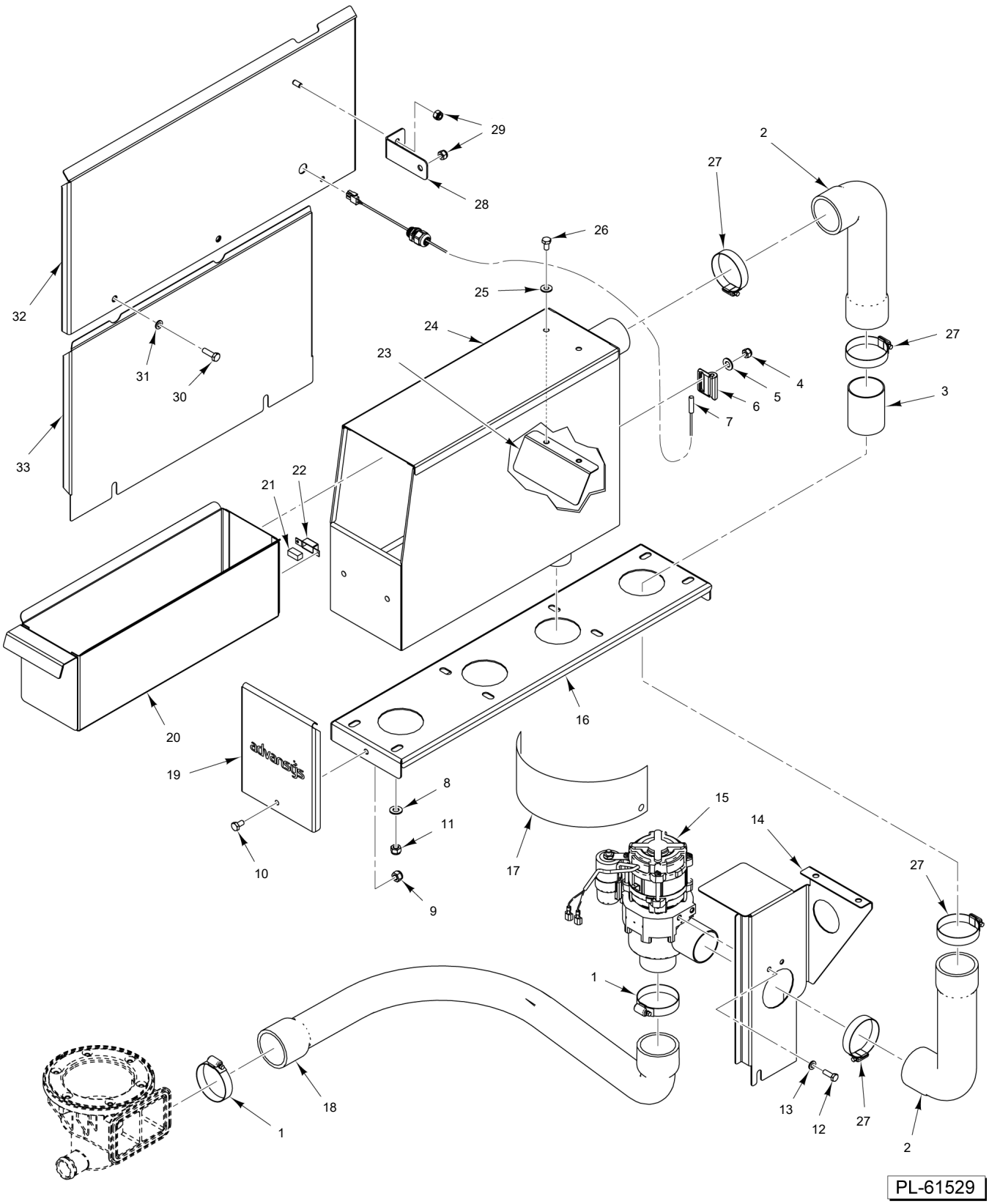

AUTOMATIC SOIL REMOVAL (ASR) SYSTEM (RH)

AUTOMATIC SOIL REMOVAL (ASR) SYSTEM (RH)

ILLUS. PL-61529	PART NO.	NAME OF PART	AMT.
1	00-558197	Clamp #36	2
2	00-975221-00001	Hose (Pump to Box)	2
3	00-975209	Tube	2
4	NS-031-15	Stop Nut 10-24 Hex (SST)	1
5	WS-019-06	Washer (SST)	1
6	01-515259-00001	Bracket - Switch	1
7	00-950437	Reed Switch Assy. (Incls. Strain Relief)	1
8	WS-005-32	Washer (SST)	4
9	NS-047-82	Stop Nut 1/4-20 Hex (SST)	1
10	SC-041-50	Cap Screw 1/4-20 x 1/2 Hex Hd. (SST)	1
11	NS-036-19	Stop Nut 5/16-18 Hex Special (SST)	4
12	SC-120-48	Cap Screw M6 x 1.0 x 18mm Hex Hd. (SST)	3
13	WL-006-17	Lockwasher 1/4 Helical (SST)	3
14	00-947975-00001	Brace - ASR (RH)	1
15	00-942096-00006	Pump - Soil (ASR) (208-240 V., 60 Hz.)	1
16	00-975225	Support	1
17	00-949691	Cover - Mylar	1
18	00-975226	Hose (Drain to Pump)	1
19	00-562631	Cover	1
20	00-975200	Basket (Incls. Items 21 & 22)	1
21	00-775860-00001	Magnet	1
22	01-240828-00001	Holder - Magnet	1
23	00-975211-00001	Guard - Splash	1
24	00-975206	Box	1
25	WS-017-06	Washer .281 x .625 x .062 (SST)	2
26	SC-041-50	Cap Screw 1/4-20 x 1/2 Hex Hd. (SST)	2
27	00-542337	Clamp - Hose	4
28	00-947974	Bracket	1
29	NS-047-82	Stop Nut 1/4-20 Hex (SST)	2
30	SC-109-47	Cap Screw 1/4-20 x 7/8 Hex Hd. (SST)	3
31	WL-006-17	Lockwasher 1/4 Helical (SST)	3
32	00-975224-00001	Brace	1
33	00-975284-00001	Panel - Trim	1

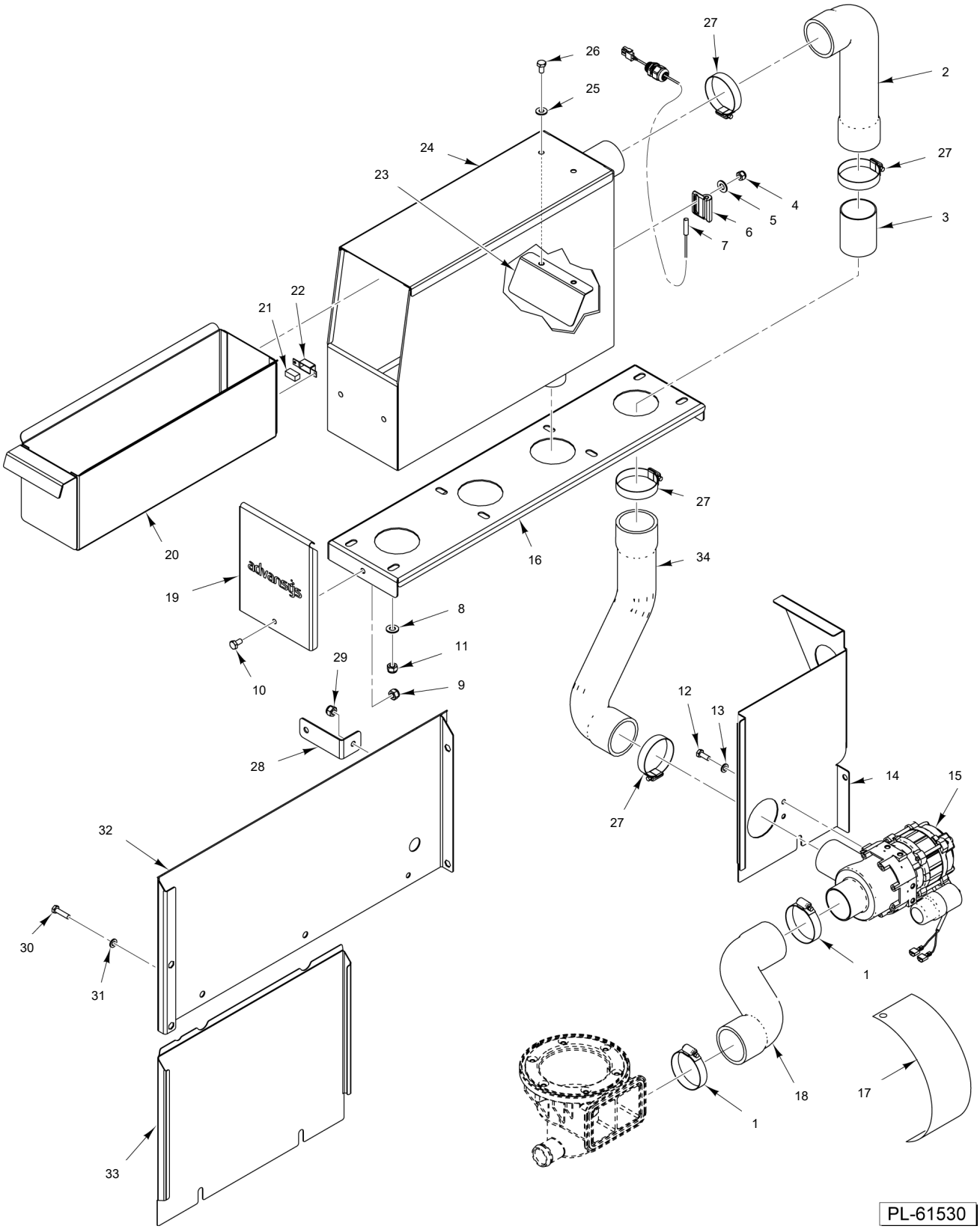

AUTOMATIC SOIL REMOVAL (ASR) SYSTEM (LH)

AUTOMATIC SOIL REMOVAL (ASR) SYSTEM (LH)

ILLUS. PL-61530	PART NO.	NAME OF PART	AMT.
1	00-558197	Clamp #36	2
2	00-975221-00001	Hose (Pump to Box)	1
3	00-975209	Tube	2
4	NS-031-15	Stop Nut 10-24 Hex (SST)	1
5	WS-019-06	Washer (SST)	1
6	01-515259-00001	Bracket - Switch	1
7	00-950437	Reed Switch Assy. (Incls. Strain Relief)	1
8	WS-005-32	Washer (SST)	4
9	NS-047-82	Stop Nut 1/4-20 Hex (SST)	1
10	SC-041-50	Cap Screw 1/4-20 x 1/2 Hex Hd. (SST)	1
11	NS-036-19	Stop Nut 5/16-18 Hex Special (SST)	4
12	SC-120-48	Cap Screw M6 x 1.0 x 18mm Hex Hd. (SST)	3
13	WL-006-17	Lockwasher 1/4 Helical (SST)	3
14	00-947975-00002	Brace (LH)	1
15	00-942096-00006	Pump - Soil (ASR) (208-240 V., 60 Hz.)	1
16	00-975225	Support	1
17	00-949691	Cover - Mylar	1
18	00-975227	Hose (Drain to Pump)	1
19	00-562631	Cover	1
20	00-975200	Basket (Incls. Items 21 & 22)	1
21	00-775860-00001	Magnet	1
22	01-240828-00001	Holder - Magnet	1
23	00-975211-00001	Guard - Splash	1
24	00-975206	Box	1
25	WS-017-06	Washer .281 x .625 x .062 (SST)	2
26	SC-041-50	Cap Screw 1/4-20 x 1/2 Hex Hd. (SST)	2
27	00-542337	Clamp - Hose	4
28	00-947974	Bracket	1
29	NS-047-82	Stop Nut 1/4-20 Hex (SST)	2
30	SC-109-47	Cap Screw 1/4-20 x 7/8 Hex Hd. (SST)	3
31	WL-006-17	Lockwasher 1/4 Helical (SST)	3
32	00-975224-00002	Brace	1
33	00-975284-00002	Panel - Side (Trim)	1
34	00-975228	Hose (Pump to Box)	1

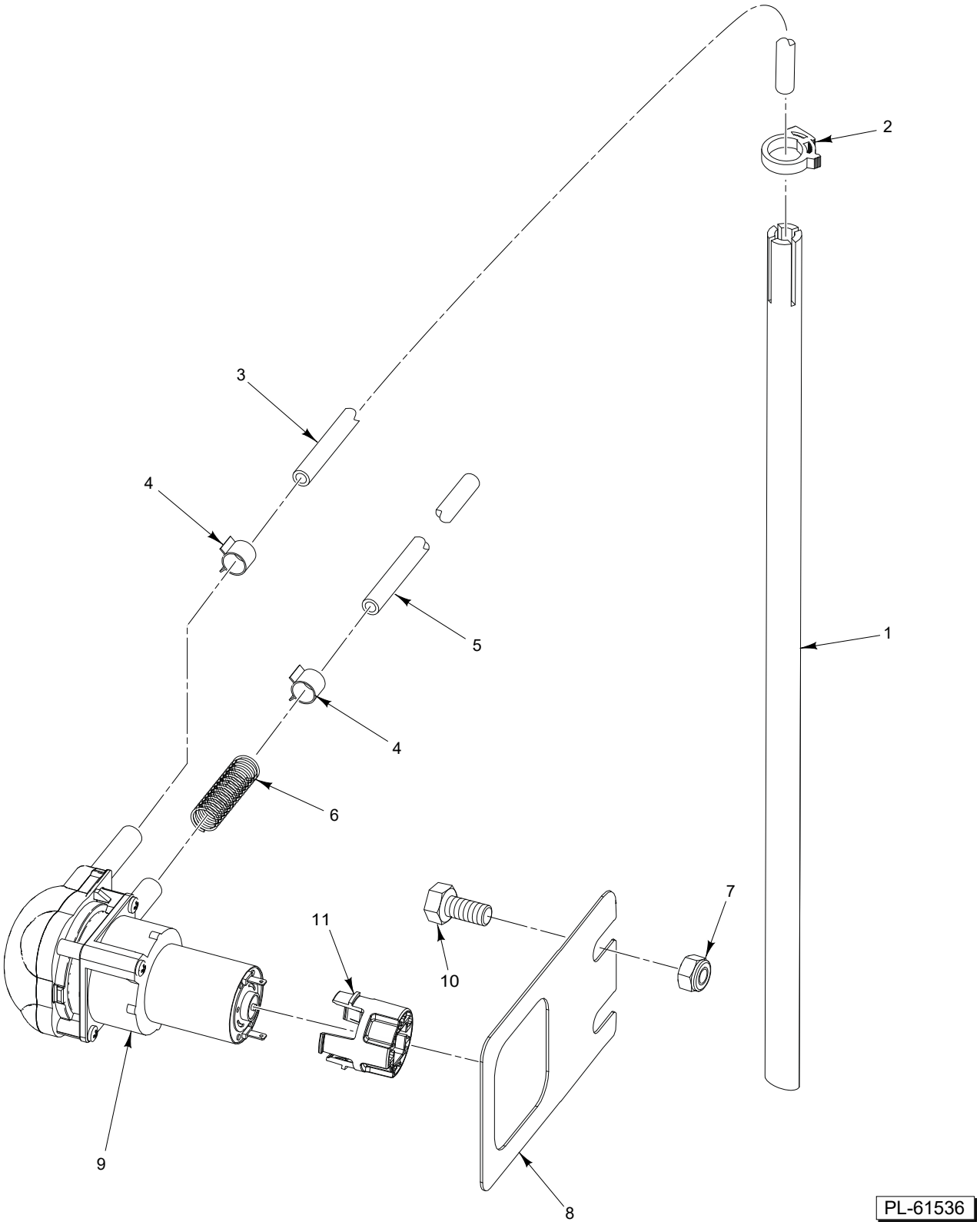

AUTO-DELIME

AUTO-DELIME

ILLUS. PL-61536	PART NO.	NAME OF PART	AMT.
1	00-185112	Stand Pipe 20-1/2 Lg.	1
2	00-185111-00002	Clamp - Hose 7/16	1
3	00-185105-00029	Tubing (Black) (144 In.) (Supply to Delime Pump)	1
4	00-113156-00001	Clamp - Spring Action Hose	2
5	01-606098-00025	Tube (36 In.) - High Temperature Tubing (Clear) (Pump to Delime)	1
6	00-974868	Coil	1
7	NS-047-82	Stop Nut 1/4-20 Hex (SST)	1
8	00-562497	Bracket - Chemical Pump	1
9	01-606272-00002	Kit - Welco Pump Service (Delime)	1
10	SC-041-50	Cap Screw 1/4-20 x 1/2 Hex Hd. (SST)	2
11	01-605650	Protector - Terminal (Welco Pump)	1

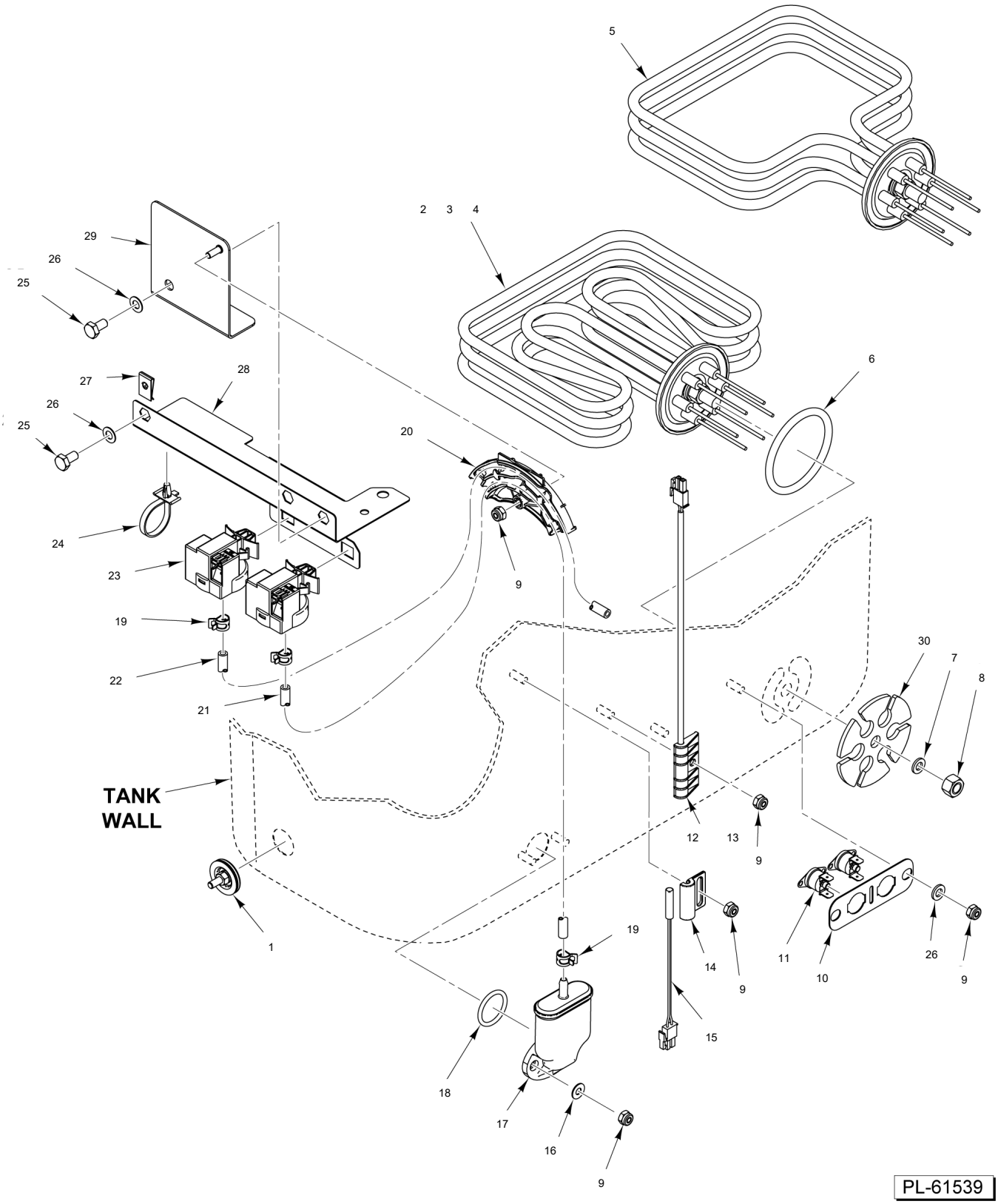

ELECTRIC HEAT AND SENSORS

ELECTRIC HEAT AND SENSORS

ILLUS. PL-61539	PART NO.	NAME OF PART	AMT.
1	00-913102-00437	Kit - Cap & Stud Assy. (Incls. Nut, Lockwasher, & O-Ring)	AR
2	00-562182-00001	Heater (200-240 V.) (Incls. Items 6, 7, & 8)	1
3	00-562182-00002	Heater (440-480 V.) (Incls. Items 6, 7, & 8)	1
4	00-562182-00003	Heater (380-415 V.) (Incls. Items 6, 7, & 8)	1
5	00-562904	Heater (Incls. Items 6, 7, & 8) (AM16SCB)	1
6	00-067500-00034	O-Ring	1
7	WL-006-27	Lockwasher 3/8 Helical (SST)	3
8	NS-014-15	Nut 3/8-16 (Brass) (Supplied With Heater)	1
9	NS-031-15	Stop Nut 10-24 Hex (SST)	1
10	00-941630	Bracket - High Limit	1
11	00-942185	Protector - High Limit	2
12	01-297719-00001	Bracket - Temp. Sensor	1
13	00-775612-00001	Sensor - Temperature	1
14	01-515259-00001	Bracket - Switch	1
15	01-515276-00001	Switch - Reed	1
16	WS-019-06	Washer (SST)	2
17	00-942151-00001	Trap - Air	1
18	OR-001-21	O-Ring	1
19	01-246214-00003	Clamp	4
20	01-515897-00001	Guide - Hose	1
21	00-562965-00001	Tubing	AR
22	00-562965-00001	Tubing	AR
23	01-539157-00001	Sensor - Pressure	2
24	00-444428	Tie - Cable Releasable	AR
25	SC-041-50	Cap Screw 1/4-20 x 1/2 Hex Hd. (SST)	2
26	WL-006-17	Lockwasher 1/4 Helical (SST)	2
27	00-975045	Speed Nut 1/4-20 (SST)	3
28	00-562128	Bracket	1
29	00-562290	Guide - Hose	1
30	00-950267	Reinforcement - Heater	1

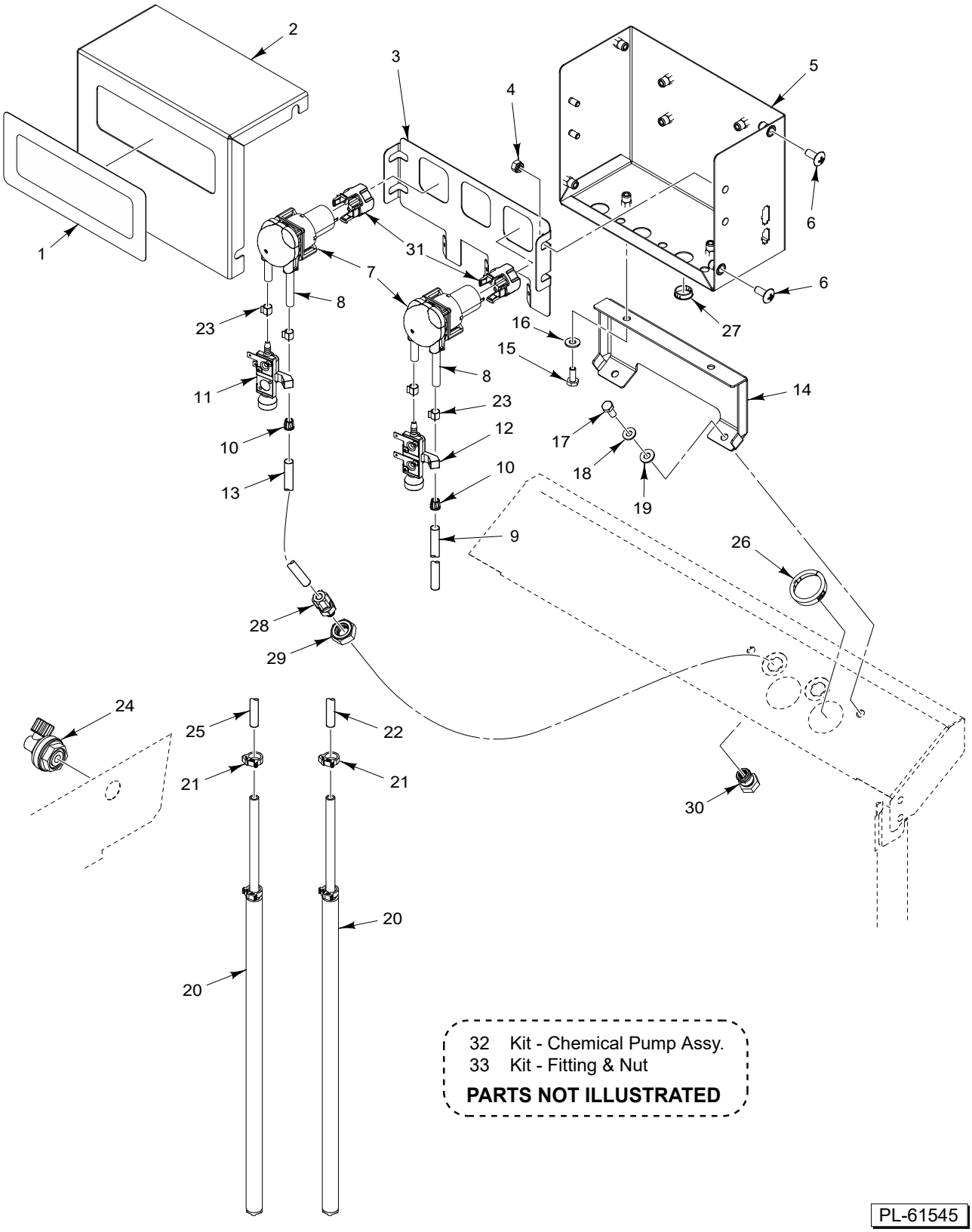

32 Kit - Chemical Pump Assy.
33 Kit - Fitting & Nut

PARTS NOT ILLUSTRATED

PL-61545

CHEMICAL PUMP - HOT SANITIZING (STD)

CHEMICAL PUMP - HOT SANITIZING (STD)

ILLUS. PL-61545	PART NO.	NAME OF PART	AMT.
1	00-563016	Window	1
2	00-562590	Cover	1
3	00-562580	Bracket - Chemical Pump	1
4	NS-047-82	Stop Nut 1/4-20 Hex (SST)	4
5	00-562589	Box - Chemical	1
6	SC-125-85	Mach. Screw 1/4-20 x 5/8 Phil. Truss Hd. (SST)	4
7	01-606272-00001	Kit - Welco Pump Service	2
8	00-949651-00001	Tubing Kit (Includes Spring, Clamp, & Tube)	2
9	01-606098-00023	Tubing (94 In.) - High Temperature (Pump to Detergent)	AR
10	FE-026-23	Bushing - Electric	3
11	00-950372-00003	Sensor for the Rinse Aid chemical.	1
12	00-950372-00002	Sensor	1
13	01-606098-00023	Tubing (94 In.) - High Temperature (Pump to R/A)	AR
14	00-562977	Bracket - Chemical Box Mounting	1
15	SC-041-05	Cap Screw 1/4-20 x 5/8 Hex Hd. (SST)	2
16	WS-017-06	Washer .281 x .625 x .062 (SST)	2
17	SC-041-05	Cap Screw 1/4-20 x 5/8 Hex Hd. (SST)	2
18	WL-007-15	Lockwasher 1/4 External Shakeproof	2
19	WS-017-06	Washer .281 x .625 x .062 (SST)	2
20	00-975024	Assy. - Suction Strainer	2
21	00-185111	Clamp - Hose	AR
22	00-185105-00002	Tube - Red (1/4 O.D. x 144 Lg.) (Supply to Detergent Pump)	AR
23	00-113156-00001	Clamp - Spring Action Hose	AR
24	00-562418	Fitting - Chemical	1
25	00-185105-00006	Tube - Blue (1/4 O.D. x 144 Lg.) (Supply to R/A Pump)	AR
26	FE-025-65	Bushing - Electrical	2
27	FE-022-95	Bushing - Snap	AR
28	FP-092-29	Fitting 1/4 Comp. x 1/8 NPT	1
29	NS-049-61	Nut	1
30	00-562596	Fitting	1
31	01-605650	Protector - Terminal (Welco Pump)	2
32	00-563068-00002	Kit - Chemical Pump Assy. (Incls. Items 1 thru 28)	1
33	00-913102-00485	Kit - Fitting & Nut (Incls. Items 28, 29, & 30)	1

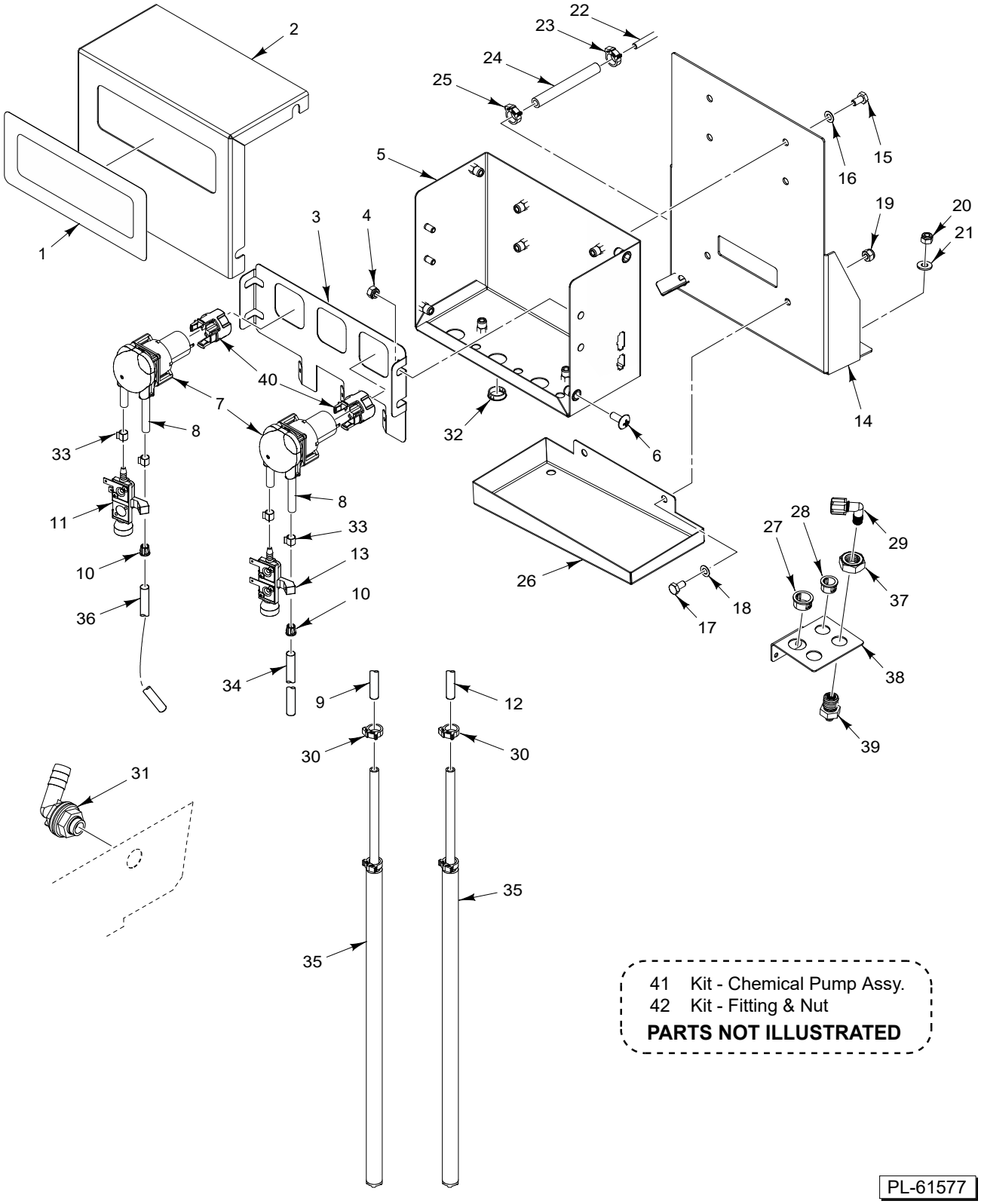

41 Kit - Chemical Pump Assy.
42 Kit - Fitting & Nut
PARTS NOT ILLUSTRATED

PL-61577

CHEMICAL PUMP - HOT SANITIZING (HTS)

CHEMICAL PUMP - HOT SANITIZING (HTS)

ILLUS. PL-61577	PART NO.	NAME OF PART	AMT.
1	00-563016	Window	1
2	00-562590	Cover	1
3	00-562580	Bracket - Chemical Pump	1
4	NS-047-82	Stop Nut 1/4-20 Hex (SST)	4
5	00-562589	Box - Chemical	1
6	SC-125-85	Mach. Screw 1/4-20 x 5/8 Phil. Truss Hd. (SST)	4
7	01-606272-00001	Kit - Welco Pump Service	2
8	00-949651-00001	Tubing Kit (Includes Spring, Clamp, & Tube)	2
9	00-185105-00006	Tube - Blue (1/4 O.D. x 144 Lg.) (Supply to R/A Pump)	AR
10	FE-026-23	Bushing - Electric	3
11	00-950372-00003	Sensor for the Rinse Aid chemical.	1
12	00-185105-00002	Tube - Red (1/4 O.D. x 144 Lg.) (Supply to Detergent Pump)	AR
13	00-950372-00002	Sensor	1
14	00-563071	Bracket - Chemical Box Weldment	1
15	SC-041-50	Cap Screw 1/4-20 x 1/2 Hex Hd. (SST)	4
16	WL-007-15	Lockwasher 1/4 External Shakeproof	4
17	SC-041-50	Cap Screw 1/4-20 x 1/2 Hex Hd. (SST)	2
18	WL-007-15	Lockwasher 1/4 External Shakeproof	4
19	NS-047-82	Stop Nut 1/4-20 Hex (SST)	2
20	NS-047-82	Stop Nut 1/4-20 Hex (SST)	3
21	WS-017-06	Washer .281 x .625 x .062 (SST)	3
22	00-185105-00024	Tubing	AR
23	00-185111	Clamp - Hose	AR
24	00-463293	Tube - Sight	1
25	00-185111-00002	Clamp - Hose 7/16	1
26	00-563070	Tray - Catch	1
27	FE-016-32	Bushing - Snap (Electrical)	1
28	FE-019-01	Bushing - Electrical Snap	1
29	FP-087-46	Fitting - Tube 1/4	1
30	00-185111	Clamp - Hose	AR
31	00-185104	Elbow - Feeder Tubes (Incls. Nut & Gasket)	1
32	FE-022-95	Bushing - Snap	AR
33	00-113156-00001	Clamp - Spring Action Hose	AR
34	01-606098-00023	Tubing (94 In.) - High Temperature (Pump to Detergent)	AR
35	00-975024	Assy. - Suction Strainer	2
36	01-606098-00023	Tubing (94 In.) - High Temperature (Pump to R/A)	AR
37	NS-049-61	Nut	1
38	00-563033	Bracket	1
39	00-562596	Fitting	1
40	01-605650	Protector - Terminal (Welco Pump)	2
41	00-563069	Kit - Chemical Pump Assy. (Incls. Items 1 thru 36)	1
42	00-913102-00486	Kit - Fitting & Nut (Incls. Items 29, 37, & 39)	1

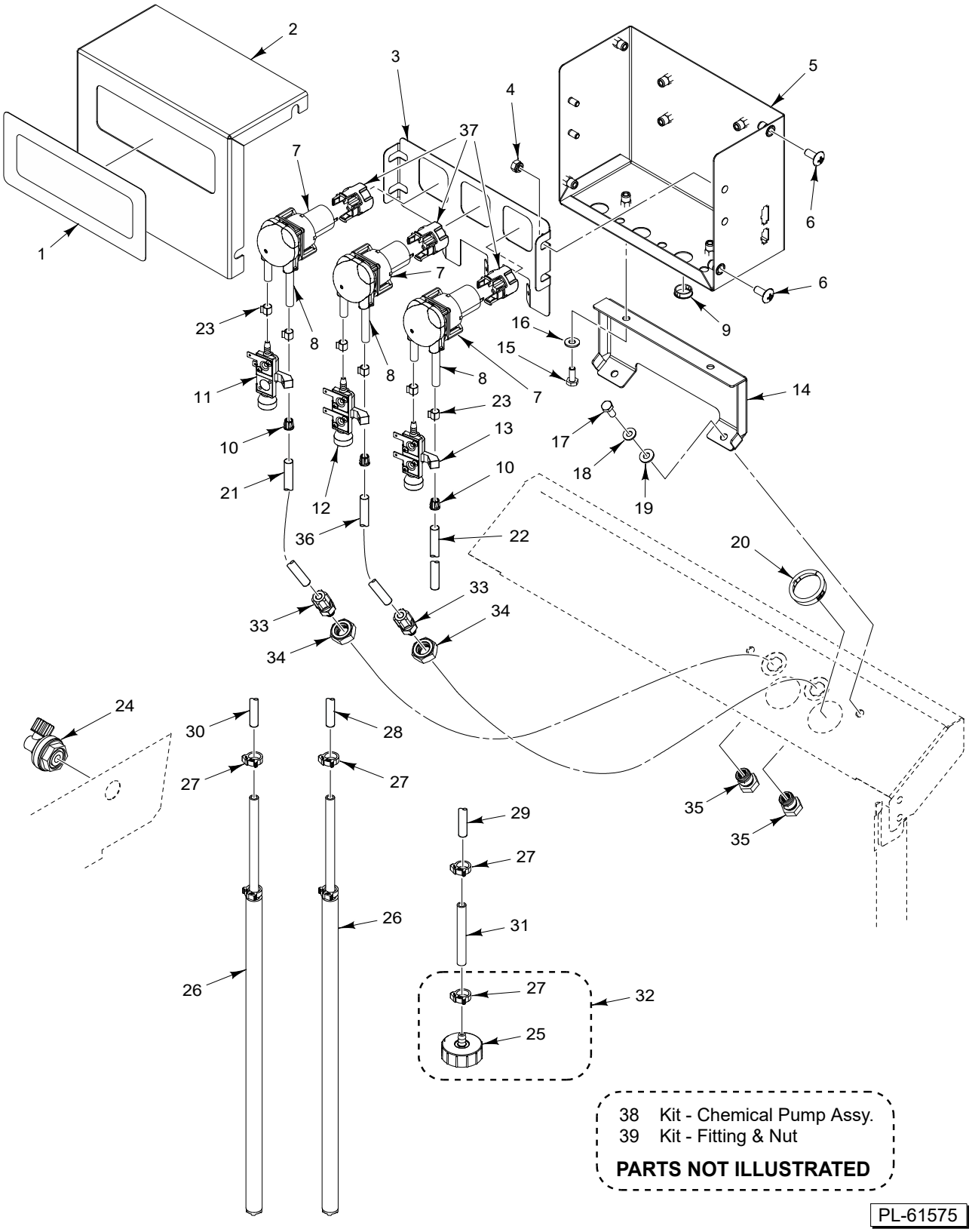

38 Kit - Chemical Pump Assy.
39 Kit - Fitting & Nut

PARTS NOT ILLUSTRATED

PL-61575

CHEMICAL PUMP
(STD) (SCB)

CHEMICAL PUMP
(STD) (SCB)

ILLUS. PL-61575	PART NO.	NAME OF PART	AMT.
1	00-563016	Window	1
2	00-562590	Cover	1
3	00-562580	Bracket - Chemical Pump	1
4	NS-047-82	Stop Nut 1/4-20 Hex (SST)	4
5	00-562589	Box - Chemical	1
6	SC-125-85	Mach. Screw 1/4-20 x 5/8 Phil. Truss Hd. (SST)	4
7	01-606272-00001	Kit - Welco Pump Service	3
8	00-949651-00001	Tubing Kit (Includes Spring, Clamp, & Tube)	3
9	FE-022-95	Bushing - Snap	AR
10	FE-026-23	Bushing - Electric	3
11	00-950372-00003	Sensor for the Rinse Aid chemical.	1
12	00-950372-00002	Sensor	1
13	00-950372-00002	Sensor	1
14	00-562977	Bracket - Chemical Box Mounting	1
15	SC-041-05	Cap Screw 1/4-20 x 5/8 Hex Hd. (SST)	2
16	WS-017-06	Washer .281 x .625 x .062 (SST)	2
17	SC-041-05	Cap Screw 1/4-20 x 5/8 Hex Hd. (SST)	2
18	WL-007-15	Lockwasher 1/4 External Shakeproof	2
19	WS-017-06	Washer .281 x .625 x .062 (SST)	2
20	FE-025-65	Bushing - Electrical	2
21	01-606098-00023	Tubing (94 In.) - High Temperature (Pump to R/A)	AR
22	01-606098-00023	Tubing (94 In.) - High Temperature (Pump to Sanitizer)	AR
23	00-113156-00001	Clamp - Spring Action Hose	AR
24	00-562418	Fitting - Chemical	1
25	00-562693	Bottle Cap & Coupling Assy.	1
26	00-975024	Assy. - Suction Strainer	2
27	00-185111-00001	Clamp - Hose (Plastic)	AR
28	00-185105-00002	Tube - Red (1/4 O.D. x 144 Lg.) (Supply to Detergent Pump)	AR
29	00-185105-00004	Tube - Clear (Supply to Pump) (1/4 O.D. x 144 Lg.) (Supply to Sanitizer Pump)	AR
30	00-185105-00006	Tube - Blue (1/4 O.D. x 144 Lg.) (Supply to R/A Pump)	AR
31	00-436293	Tube - Clear	AR
32	00-562915	Cap - Bottle (Incls. Items 25 & 27)	1
33	FP-092-29	Fitting 1/4 Comp. x 1/8 NPT	2
34	NS-049-61	Nut	2
35	00-562596	Fitting	2
36	01-606098-00023	Tubing (94 In.) - High Temperature (Pump to Detergent)	AR
37	01-605650	Protector - Terminal (Welco Pump)	3
38	00-563068	Kit - Chemical Pump Assy. (Incls. Items 1 thru 33)	AR
39	00-913102-00485	Kit - Fitting & Nut (Incls. Items 33, 34, & 35)	1

23	00-562939	Gasket - Cover (Std)
24	00-562940	Gasket - Cover (HTS)
25	00-561771	Cover - Exhaust (HTS)

PARTS NOT ILLUSTRATED

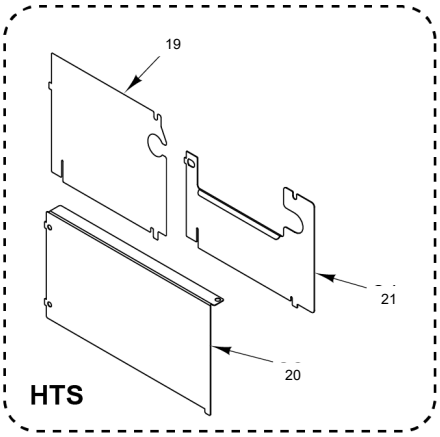

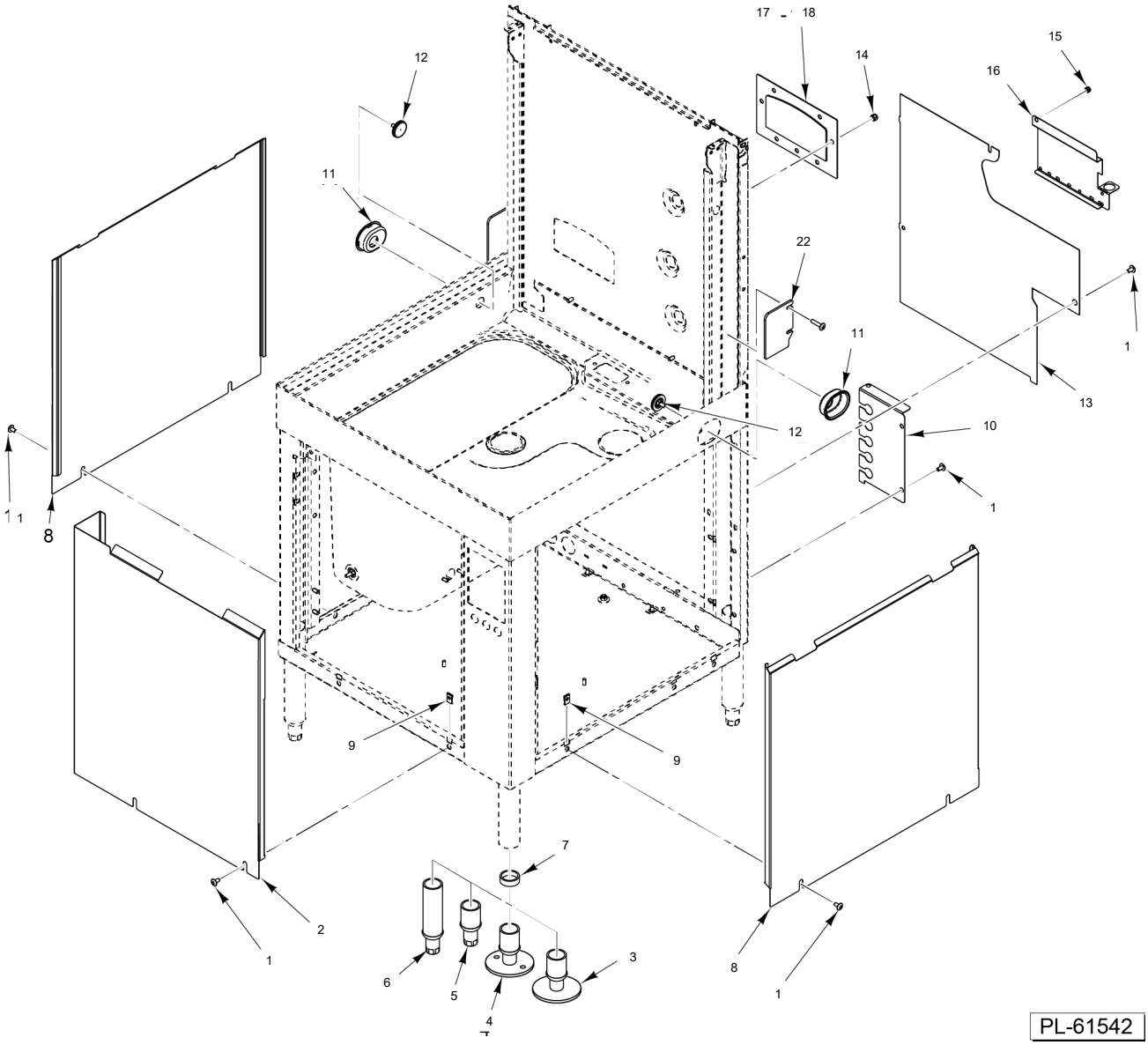

PL-61542

FRAME AND PANELS

FRAME AND PANELS

ILLUS. PL-61542	PART NO.	NAME OF PART	AMT.
1	SC-125-15	Mach. Screw 1/4-20 x 1/2 Phil. Truss Hd.	8
2	00-975395	Panel - Front	1
3	00-563006-00001	Kit - Foot (Flanged) (Set of 4) (Incls. Item 7)	1
4	00-563006-00002	Kit - Foot (Flanged W/Holes) (Set of 4) (Incls. Item 7)	1
5	00-288946-00002	Foot - Adjustable (1-5/8) (SST) (Incls. Item 7)	1
6	00-563006-00004	Kit - Foot (Adjustable) (Set of 4) (3 In. Taller Foot) (Incls. Item 7)	1
7	00-563006-00005	Ring - Locking	4
8	00-975394	Panel - Side	2
9	00-975045	Speed Nut 1/4-20 (SST)	AR
10	00-562150	Panel - Electrical Connection	1
11	00-562537	Grommet	2
12	00-913102-00437	Kit - Cap & Stud Assy. (Incls. Nut, Lockwaser, & O-Ring)	2
13	00-562155	Panel - Rear (STD)	1
14	NS-047-82	Stop Nut 1/4-20 Hex (SST)	2
15	NS-031-15	Stop Nut 10-24 Hex (SST)	1
16	00-562532	Guide - Hose	1
17	00-562936	Cover (STD) (Non-Ventless)	1
18	00-563018	Cover (AM16T) (Non-Ventless)	1
19	00-562151	Panel - Rear (Trim) (HTS)	1
20	00-562154	Panel - Trim (Rear) (HTS)	1
21	00-562289	Panel - Trim (Upper Rear) (HTS)	1
22	00-563447	Bracket - Table Corner (AM16-SCB)	1
23	00-562939	Gasket - Cover (STD)	1
24	00-562940	Gasket - Cover (HTS)	1
25	00-562771	Weldment - Cover (HTS)	1

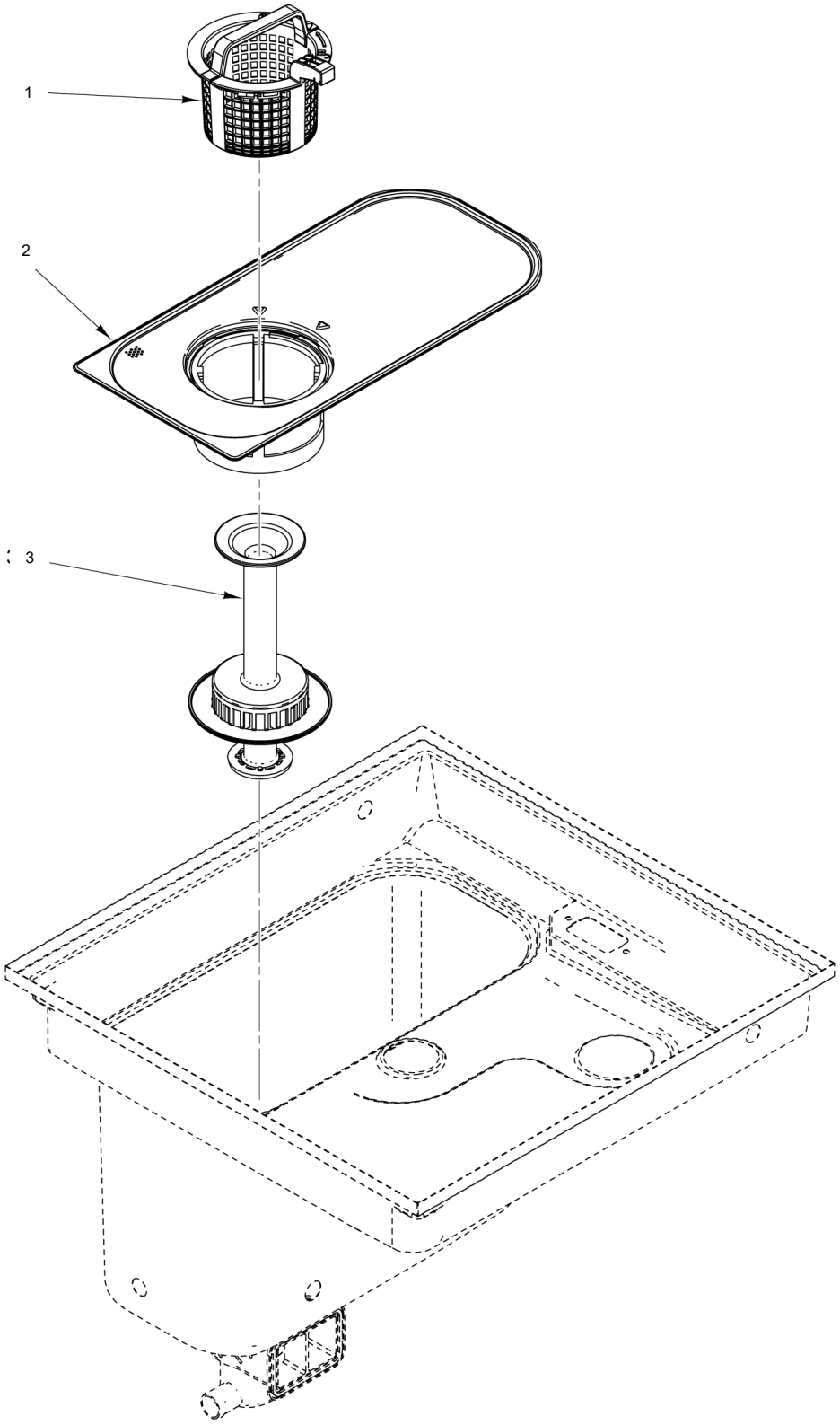

PL-61540

STRAINERS

STRAINERS

ILLUS. PL-61540	PART NO.	NAME OF PART	AMT.
1	01-515594-00001	Strainer Basket Assy.	1
2	01-515598-00001	Strainer Assy.	1
3	00-883550-00001	Standpipe Assy.	1

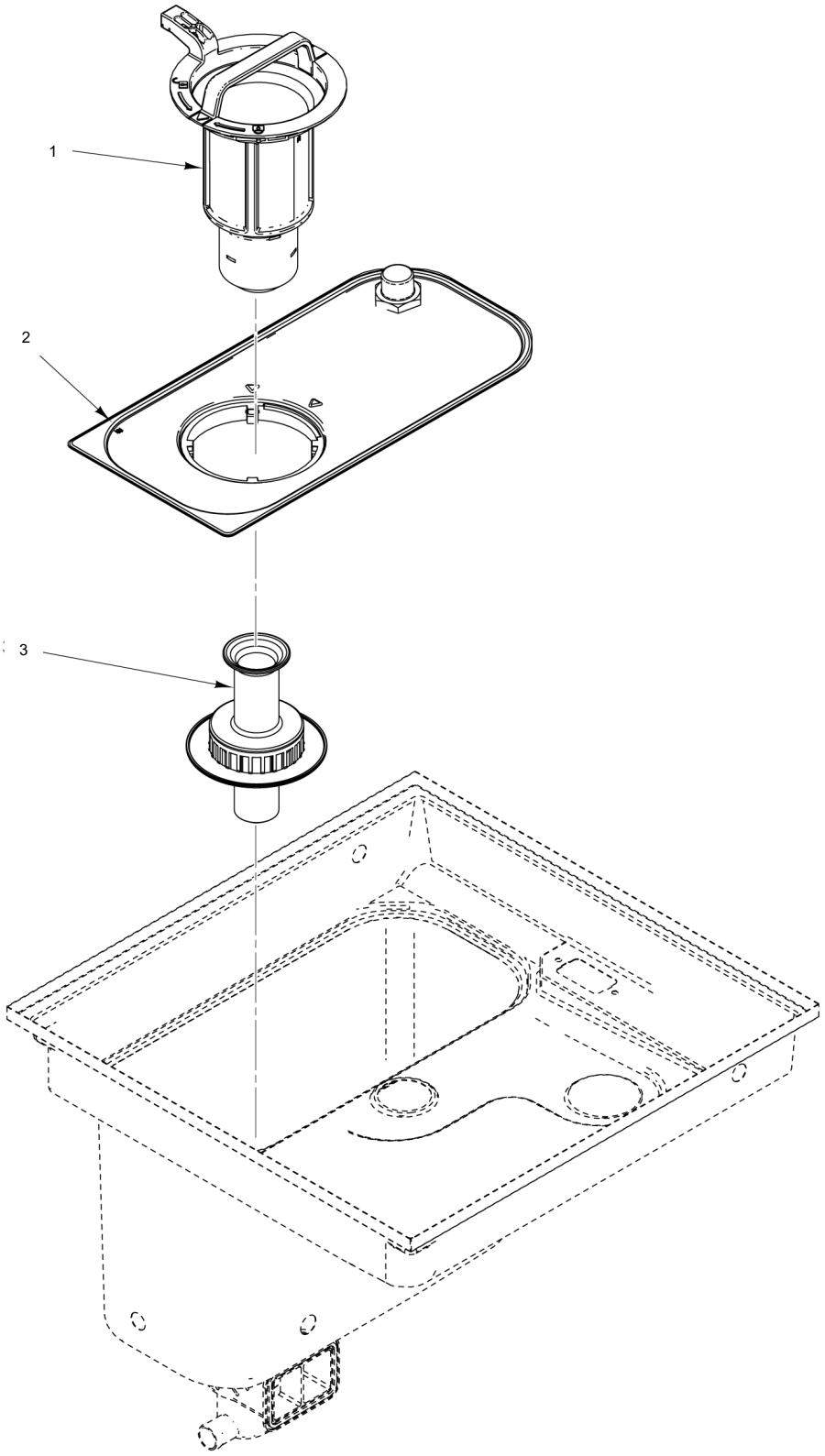

PL-61578

STRAINERS (ASR)

STRAINERS (ASR)

ILLUS. PL-61578	PART NO.	NAME OF PART	AMT.
1	01-515782-00001	Basket - Strainer (ASR)	1
2	01-515598-00002	Strainer Assy. (ASR)	1
3	01-515780-00001	Standpipe (ASR)	1

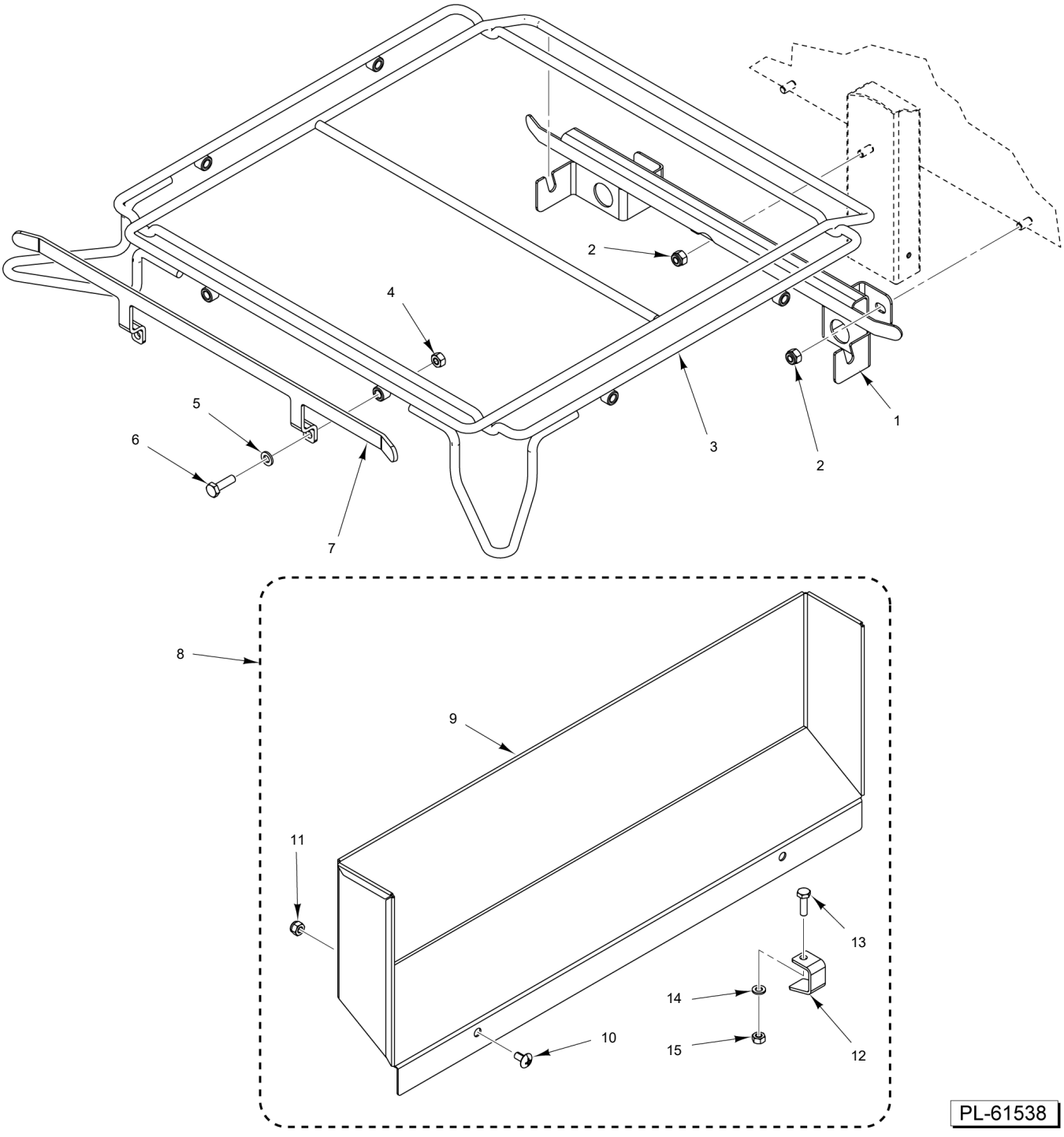

RACK ASSEMBLY

RACK ASSEMBLY

ILLUS. PL-61538	PART NO.	NAME OF PART	AMT.
1	00-562057	Bracket - Rack Mount	1
2	NS-047-82	Stop Nut 1/4-20 Hex (SST)	AR
3	00-562190	Rack	1
4	NS-015-01	Nut 1/4-20 Hex (SST)	2
5	WL-006-17	Lockwasher 1/4 Helical (SST)	2
6	SC-109-47	Cap Screw 1/4-20 x 7/8 Hex Hd. (SST)	2
7	00-975472	Bracket - Guide	1
8	00-562156-00001	Kit (Incls. Items 9 thru 15)	1
9	00-562156-00002	Panel	1
10	SC-125-15	Mach. Screw 1/4-20 x 1/2 Phil. Truss Hd.	2
11	NS-047-82	Stop Nut 1/4-20 Hex (SST)	2
12	00-562272	Clip	2
13	SC-109-47	Cap Screw 1/4-20 x 7/8 Hex Hd. (SST)	2
14	WL-006-17	Lockwasher 1/4 Helical (SST)	2
15	NS-015-01	Nut 1/4-20 Hex (SST)	2

3	00-295288 Peg Type Tray Rack (Packaged)
4	00-892671 Rack - Bun Pan
5	00-474800 Rack (6 Pan)
6	00-562434 Rack - Sheet Pan

PARTS NOT ILLUSTRATED

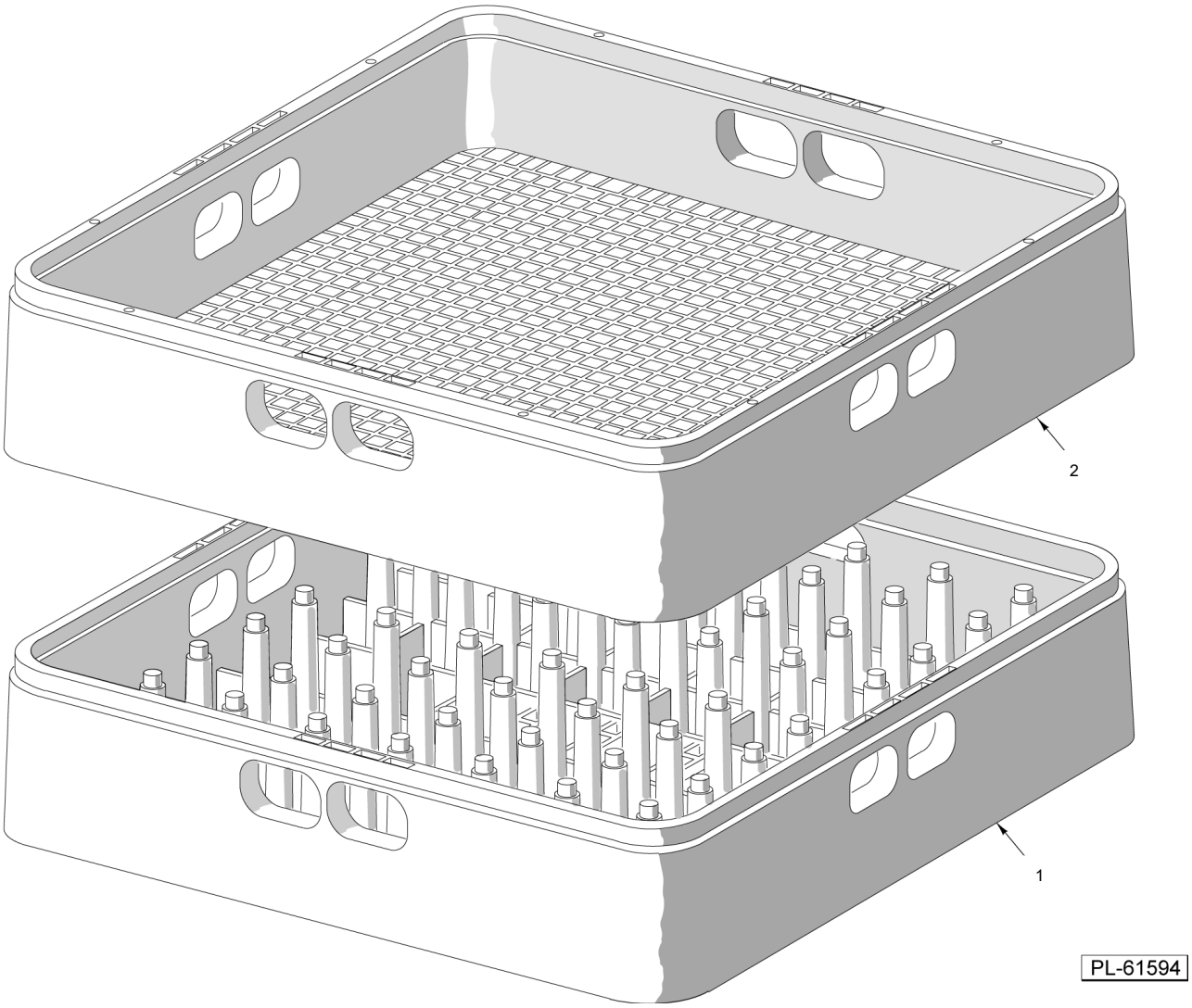

DISH RACKS AND ACCESSORIES

DISH RACKS AND ACCESSORIES

ILLUS. PL-61594	PART NO.	NAME OF PART	AMT.
1	00-315191	Rack - Peg (Packaged)	1
2	00-315193	Rack - Combination (Packaged)	1
3	00-295288	Peg Type Tray Rack (Packaged)	1
4	00-892671	Rack - Bun Pan	1
5	00-474800	Rack (6 Pan)	1
6	00-562434	Rack - Sheet Pan	1