CUSTOMER SUPPORT

AM16-SERIES DISHWASHERS

MODELS
AM16-BAS
AM16T-BAS

AM16VL-BAS
AM16VLT-BAS

AM16-ASR
AM16T-ASR

AM16VL-ADV
AM16VLT-ADV

AM16SVL
AM16SVLT

AM16SCB
AM16TSCB

AM16VLSCB
AM16VLTSCB



HOBART
701 S. RIDGE AVENUE
TROY, OHIO 45374-0001
937 332-3000
https://www.hobartcorp.com/am16training

FORM 41339 (April 2026)

IMPORTANT FOR YOUR SAFETY

THIS MANUAL WAS PREPARED FOR EXPERIENCED, TRAINED PROFESSIONALS AND SHOULD NOT BE USED BY ANYONE ELSE. BEFORE SERVICING EQUIPMENT OR USING THIS MANUAL, YOU MUST FULLY REVIEW YOUR PRODUCT'S SAFETY AND INSTRUCTION MANUAL, WHICH MUST BE FOLLOWED IN ALL RESPECTS. ALL EQUIPMENT REFERENCED HEREIN SHOULD ONLY BE OPERATED, MAINTAINED, AND/OR SERVICED BY EXPERIENCED, TRAINED PROFESSIONALS. PLEASE REVIEW YOUR PRODUCT'S WARRANTY STATEMENT PRIOR TO ANY SERVICE OR REPAIRS BEING PERFORMED, AS IMPROPER REPAIRS MAY VOID THE WARRANTY.

THIS MANUAL HAS BEEN PREPARED FOR PERSONNEL QUALIFIED TO INSTALL GAS EQUIPMENT, WHO SHOULD PERFORM THE INITIAL FIELD START-UP AND ADJUSTMENTS OF THE EQUIPMENT COVERED BY THIS MANUAL.

POST IN A PROMINENT LOCATION THE INSTRUCTIONS TO BE FOLLOWED IN THE EVENT THE SMELL OF GAS IS DETECTED. THIS INFORMATION CAN BE OBTAINED FROM THE LOCAL GAS SUPPLIER.

IMPORTANT

IN THE EVENT A GAS ODOR IS DETECTED, SHUT DOWN UNITS AT MAIN SHUTOFF VALVE AND CONTACT THE LOCAL GAS COMPANY OR GAS SUPPLIER FOR SERVICE.

FOR YOUR SAFETY

DO NOT STORE OR USE GASOLINE OR OTHER FLAMMABLE VAPORS OR LIQUIDS IN THE VICINITY OF THIS OR ANY OTHER APPLIANCE.

FOR YOUR SAFETY
READ BEFORE OPERATING

DO NOT USE THIS APPLIANCE IF ANY PART HAS BEEN UNDER WATER. IMMEDIATELY CALL A QUALIFIED SERVICE TECHNICIAN TO INSPECT THE APPLIANCE AND TO REPLACE ANY PART OF THE CONTROL SYSTEM AND ANY GAS CONTROL WHICH HAS BEEN UNDER WATER.

IN THE EVENT OF A POWER FAILURE, DO NOT ATTEMPT TO OPERATE THIS DEVICE.



⚠ WARNING

DISCONNECT THE ELECTRICAL POWER TO THE MACHINE AND FOLLOW LOCKOUT / TAGOUT PROCEDURES. THERE MAY BE MULTIPLE CIRCUITS. BE SURE ALL CIRCUITS ARE DISCONNECTED.

© HOBART CORPORATION, 2026

TABLE OF CONTENTS

OPERATION 4
INTERNAL DISH MACHINE COMPONENTS 4
HMI AND DISPLAY 5
COMMON INSPECTION INQUIRIES 6
Checking Dish Machine Temperature 6
Pumped Final Rinse System – Pressure Gauge Not Required 7
Backflow Prevention 7
DELIMING 9
Delime Notification Setup 9
Manual Delime Procedure (Models AM16-BAS, AM16T-BAS, AM16VL-BAS, AM16VLT-BAS, AM16SCB, AM16VLSCB and AM16VLTSCB) 9
Auto Delime Procedure (Models AM16-ASR, AM16T-ASR, AM16VL-ADV, AM16VLT-ADV, AM16SVL and AM16SVLT) 10
CHEMICAL PUMP PRIMING 11
HOBART SMARTCONNECT APP 12

SERVICE 14
COMPONENT LAYOUT 14
WIRING DIAGRAMS 26
SEQUENCE OF OPERATIONS 28
Machine Off Display Not Lit 28
On Key Pressed 28
Fill / Preheat Cycle (Empty Tank) 28
Fill Cycle – Full Tank Hot Water 29
Fill Cycle – Full Tank Cold Water 30
Booster Temp Reaches Set-Point 30
Tank Temp Reaches Set-Point 31
Cycle Selection 31
Wash Cycle 31
ASR Cycle 32
Rinse Cycle Begins 32
Rinse Cycle Completed 32
Condense Cycle (Ventless Models Only) 33
Drain Cycle (Powered Down) 33
Drain Cycle (Manual Drain) 33
Delime Cycle – Manual 34
Delime Cycle – Automatic 35
TROUBLESHOOTING CHART 38
TROUBLESHOOTING ERROR CODES 42
COMPONENT OPERATING VALUES 60
PROGRAMMING 62
Manager Menu 62
Manager Menu Parameters 63
Service Menu 66
Parameters Menu 66
HMI Firmware Update 67
PREVENTATIVE MAINTENANCE CHECKLIST 74
RECOMMENDED SPARE PARTS 76

OPERATION

INTERNAL DISH MACHINE COMPONENTS

Ensure all internal dish machine components shown below are properly installed. If components are not properly installed, issues such as splash out, poor wash results, or improper operation may occur.

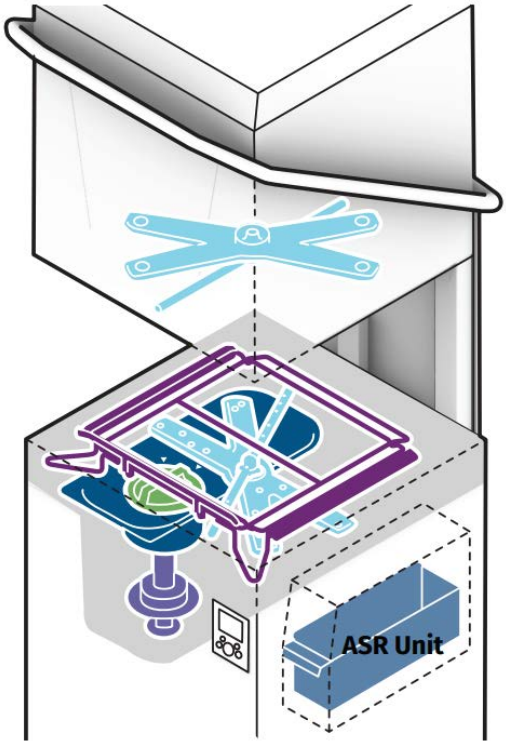

1. Ensure the standpipe and drain are free of food soils and that the standpipe is seated properly in the drain.
2. Ensure the strainer pan and strainer basket are clean and properly installed in the machine. When installing the strainer basket, ensure the basket is in the 'locked' position by rotating the basket clockwise.
3. Ensure both upper and lower wash and rinse arms rotate freely and are free of any obstructions.
4. If the machine is equipped with the automatic soil removal (ASR) feature, ensure the external scrap basket is properly installed in the ASR housing.

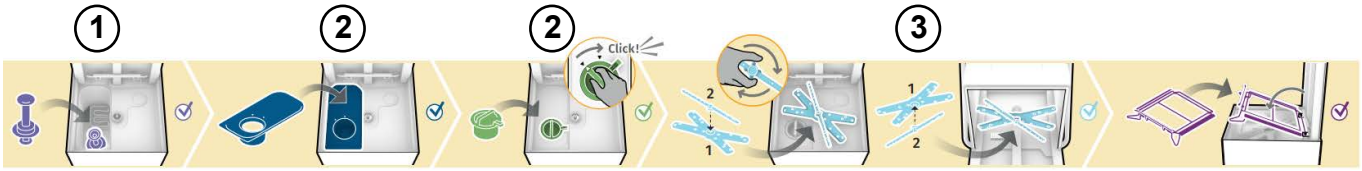

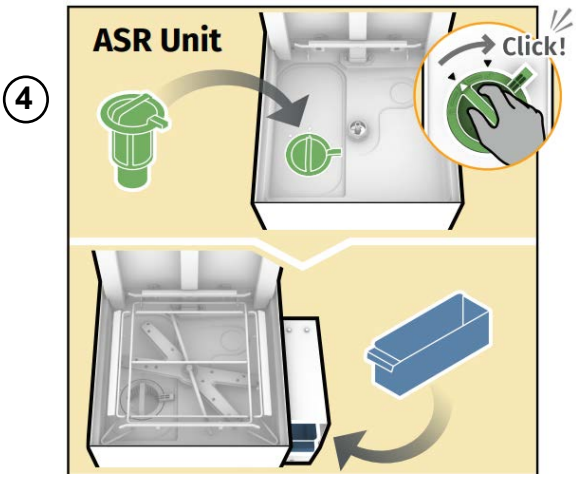

HMI AND DISPLAY

The controls are mounted on the front of the machine.

NOTE: To enter the Manager Menu, enter code 1001. Refer to the Programming section on page 62 for more information.

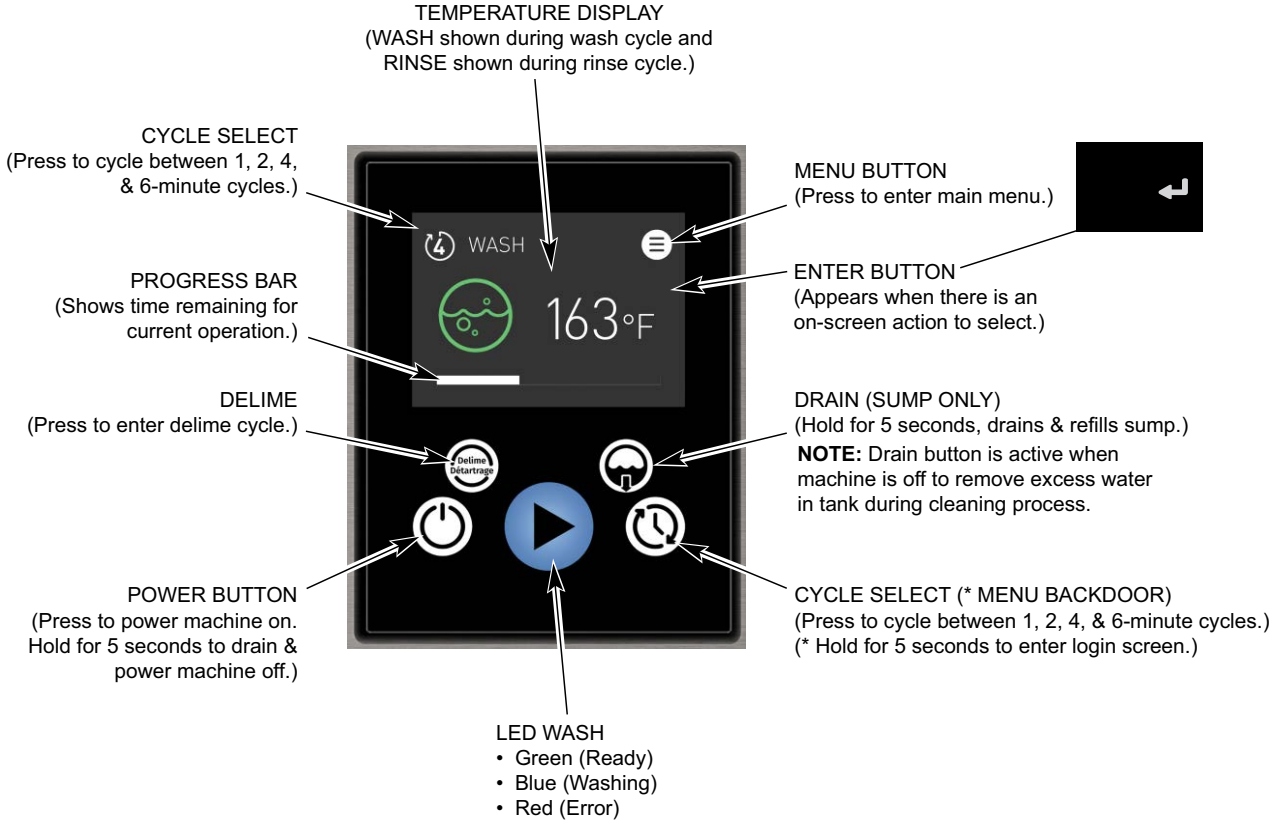

COMMON INSPECTION INQUIRIES

Below are common inquiries that arise regarding code compliance from health and plumbing inspectors pertaining to dish machines.

Checking Dish Machine Temperature

Refer to the data label located on the lower front panel for minimum temperature requirements for the wash and final rinse temperatures. Below are the NSF guidelines for checking temperatures in dishwashing machines taken from the NSF Recommended Field Evaluation Procedures for Commercial Warewashing Machines document.

1. Heat accumulation on dishes over a period of time in hot water sanitizing machines, not merely a single temperature, achieves proper sanitization. Therefore, each of the wash, power rinse (on some machines), and final rinse cycles must be operating at its proper temperature. For hot water sanitizing machines, the following should be determined:
   a. No deposits (e.g., lime, napkins, etc.) on the heating elements.
   b. On gas-heated machines, tank gas heater jets are not obstructed.
   c. No excessive ventilation in the removal of steam and condensation.

2. Unless the machine has been used just prior to testing, it should be run through at least two complete wash and final rinse cycles before temperature readings are taken. On conveyor machines, this is done by running a rack through the machine twice.

3. The temperatures of wash water and pumped rinse water are taken directly from the tanks of the machines. As standard practice, the temperature of the water during the final rinse cycle should be taken at the inlet manifold.

4. Maximum-registering thermometers or thermo-labels (paper thermometers that change color when reaching specified temperatures) may be used to confirm the effectiveness of heat sanitization. **For hot water sanitizing machines, a reading of 160° F at the dish level, measured using a maximum registering or paper thermometer, is an indication of satisfactory sanitization.**

5. To give an accurate reading, the maximum registering thermometer should be attached in a vertical position to the machine. Rubber bands or clips may be used to hold the thermometer in place. The thermometer should also be removed from any case or guard when used. Thermo-labels are attached by pressure-sensitive adhesive tape to a clean, dry china plate.

6. Although absolute accuracy cannot be expected from thermometers, a variation of 1 to 2° F in either direction is acceptable.

Pumped Final Rinse System – Pressure Gauge Not Required

The FDA Food Code and NSF/ANSI Standard 3 for Commercial Warewashing Equipment require pressure gauges for machines that utilize line pressure sanitizing rinses. However, NSF/ANSI 3 goes on to state, “A pressure gauge is not required for non-recirculating pumped sanitizing rinses, recirculated sanitizing rinses, post-sanitizing rinses, or auxiliary rinses.”

In addition, the 2022 FDA Food Code includes the following wording:

4-204.118 Warewashing Machines, Flow Pressure Device

(A) WAREWASHING machines that provide a fresh hot water SANITIZING rinse shall be equipped with a pressure gauge or similar device such as a transducer that measures and displays the water pressure in the supply line immediately before entering the WAREWASHING machine; and

(B) If the flow pressure measuring device is upstream of the fresh hot water SANITIZING rinse control valve, the device shall be mounted in a 6.4 millimeter or one-fourth inch Iron Pipe Size (IPS) valve.

(C) Paragraphs (A) and (B) of this section do not apply to a machine that uses only a pumped or recirculated SANITIZING rinse.

All Hobart AM16 commercial dish machines utilize a pumped final sanitizing rinse and produce a uniform spray pattern regardless of the incoming water pressure. For that reason, they are not required to have a pressure gauge.

Backflow Prevention

The Hobart AM16 series commercial dishwashers are NSF Certified and meet the requirements of NSF 3 for Commercial Warewashing Equipment. NSF 3 requires backflow protection as follows:

Water Supply Protection

5.9.2 Water inlets intended to be connected to a water supply system under pressure shall be equipped with at least one of the following backflow prevention devices:

- an air gap that is:
  - installed in accordance with ANSI/ASSE 1004: *Commercial Dishwashing Machines*;
  - located on the outside of the machine wash and rinse chamers;
  - positioned above the overflow rim;
  - protected against suds, spray, splash and flooding; and
  - sized at least twice the diameter of the water supply inlet, but not < 1.0 in (25 mm).

  NOTE — Air gap need not be readily visible from the outside of the machine.

or

- a vacuum breaker that complies with ANSI/ASSE 1001, *Atmospheric Type Vacuum Breakers* (for intermittent pressure conditions), and is installed in accordance with ANSI/ASSE 1004: *Performance Requirements for Commercial Dishwashing Machines*.

The AM16 series dish machines are provided with an air gap mounted on the rear of the chamber where the water fills the tank. An illustration of this component is shown below. This air gap fixture has been tested and approved by NSF International as evidenced by the Certification Mark on the machines. Therefore, additional backflow protection is not required for the AM16 series dish machines.

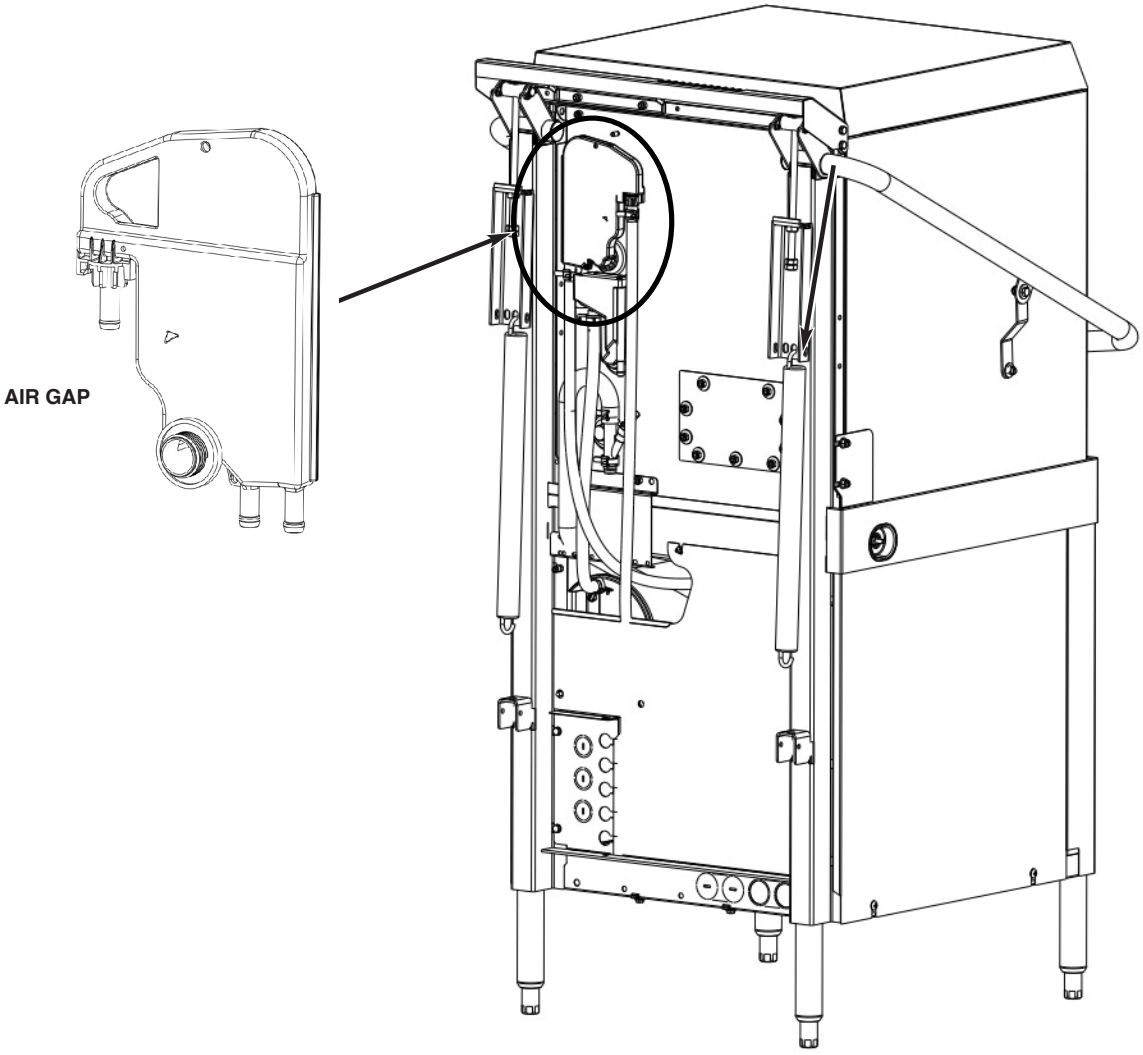
AIR GAP

DELIMING

Delime Notification Setup

The AM16-BAS, AM16T-BAS, AM16VL-BAS, AM16VLT-BAS, AM16SCB, AM16VLSCB and AM16VLTSCB models have the ability to notify the operator when to delime based on a set number of cycles ran. The factory default for the number of delime cycles until the delime reminder notification is displayed is 2000. Refer to the PROGRAMMING section of this manual on page 62 to set the number of cycles until the delime notification is displayed.

The AM16-ASR, AM16T-ASR, AM16VL-ADV, AM16VLT-ADV, AM16SVL and AM16SVLT models have the ability to notify the operator when to delime based on the incoming water hardness and dish machine usage. The factory default for water hardness is 7 grains per gallon. Refer to the PROGRAMMING section of this manual on page 62 to set the water hardness based on actual water conditions.

Manual Delime Procedure (Models AM16-BAS, AM16T-BAS, AM16VL-BAS, AM16VLT-BAS, AM16SCB, AM16VLSCB and AM16VLTSCB)

To enter a delime cycle without the notification, press the DELIME button on the HMI. The delime button is active even while the machine is shut down.

Machine will prompt operator when to delime based on a set number of cycles ran. When prompted, display will read 'Delime required. Start Delime Cycle?' If ready to delime, press either arrow button to highlight 'yes' and press the 'Enter' button. Press 'Enter' button on 'no' to delime machine later. If 'yes' is selected, proceed to Step 3 below. Start process at Step 1 if initiating manual delime process without the prompt.

1. Press the 'Delime' button.

2. Display will prompt 'Start Delime Cycle?'. Press either arrow button to highlight 'yes' and press the 'Enter' button.

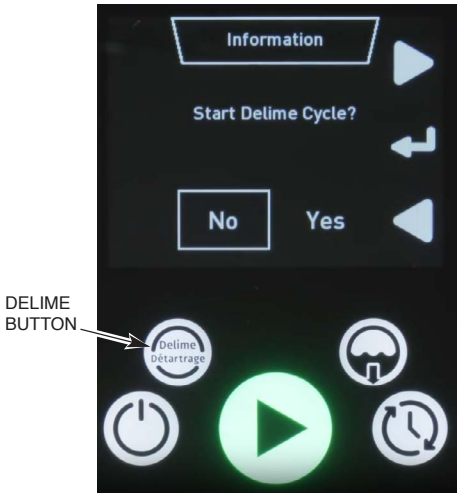

3. Display will prompt 'Please Clean strainer'. Open machine door and remove strainer basket and strainer pan. Clean basket and pan in a sink with a mild detergent and rinse.

4. Replace strainer pan and strainer basket in machine and ensure basket is in the locked position.

5. Close machine door and press the 'Enter' button. Machine will drain. Once machine has drained, the display will prompt 'Please insert delime'. Open machine door and pour required amount of delime chemical into wash tank according to chemical suppliers' recommendation for 10.5-gallon wash tank and close door.

6. Once door is closed, press the ‘Enter’ button. Tank will fill with fresh water. Once filled, the unit will begin a 10-minute wash cycle. Note: ‘Enter’ button will not appear on display until door is opened and closed.

7. After 10-minute wash cycle, machine will drain and re-fill with fresh water. Once filled, the unit will begin a 1-minute wash cycle to flush any remaining delime chemical residue.

8. After 1-minute wash cycle, the machine will drain and power down.

Auto Delime Procedure (Models AM16-ASR, AM16T-ASR, AM16VL-ADV, AM16VLT-ADV, AM16SVL and AM16SVLT)

To enter a delime cycle without the notification, press the DELIME button on the HMI. The delime button is active even while the machine is shut down.

Machine will prompt operator when to delime based on water hardness and machine usage. When prompted, display will read ‘Delime required. Start Delime Cycle?’ If ready to delime, press either arrow button to highlight ‘yes’ and press the ‘Enter’ button. Press ‘Enter’ button on ‘no’ to delime machine later. If ‘yes’ is selected, proceed to Step 3 below. Start process at Step 1 if initiating auto delime process without the prompt.

NOTE: Machine will automatically pump delime solution into dish machine during auto delime cycle. Ensure sufficient chemical is present in bottle and standpipe is fully inserted into bottle.

1. Press the ‘Delime’ button.

2. Display will prompt ‘Start Delime Cycle?’. Press either arrow button to highlight ‘yes’ and press the ‘Enter’ button.

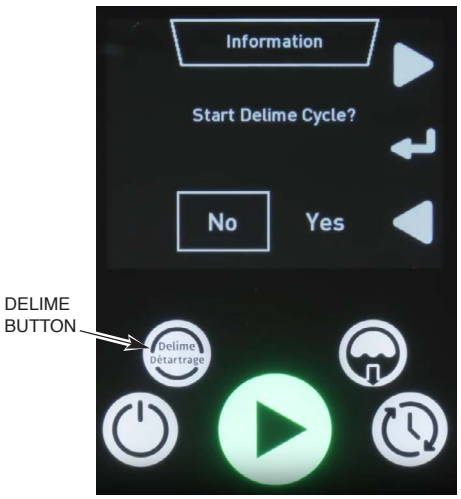

3. Display will prompt ‘Please Clean strainer’. Open machine door and remove strainer basket and strainer pan. Clean basket and pan in a sink with a mild detergent and rinse.

4. Replace strainer pan and strainer basket in machine and ensure basket is in the locked position.

5. Close machine door and press the ‘Enter’ button. Machine will drain. Once machine has drained, machine will begin to re-fill with fresh water and automatically add delime solution as the unit fills.

6. Once unit has filled and delime solution has been added, the unit will begin a 10-minute wash cycle.

7. After 10-minute wash cycle, machine will drain and re-fill with fresh water. Once filled, the unit will begin a 1-minute wash cycle to flush any remaining delime chemical residue.

8. After 1-minute wash cycle, the machine will drain and power down.

CHEMICAL PUMP PRIMING

All machines equipped with Hobart chemical pumps will prime automatically. If manual priming is required, follow the steps below.

1. Power on dishwasher. Display shows ready screen when fill cycle has completed.
2. Press ‘Menu’ button.
3. With ‘Manager Login’ highlighted, press the ‘Enter’ button. The ‘enter PIN’ screen will be displayed.
4. The default manager code is 1001. Use the arrow buttons to change the value and then press the ‘Enter’ button to select the value and toggle to the next digit until the code is entered.
5. After pressing ‘Enter’ for the last digit, use the down arrow and scroll until ‘chemical menu’ is outlined. Press Enter.
6. Scroll down until ‘Prime Chemical Pumps’ is outlined. Press Enter.
7. ‘Prime Detergent Pump’ is displayed. Use the arrow keys to select yes or no to prime the detergent pump. Press Enter button.
8. ‘Prime Rinse Aid Pump’ is displayed. Use the arrow keys to select yes or no to prime the rinse aid pump. Press Enter button.
9. ‘Priming Sanitizer Pump’ is displayed. Use the arrow keys to select yes or no to prime the sanitizer pump. Press Enter button.
10. ‘filling chemical hoses’ is displayed and the appropriate chemical pump(s) set to ‘yes’ in Steps 7 - 9 will prime for 20 seconds and display will revert back to the ‘chemical menu’.
11. To exit the menu, use the Up and Down Arrows to scroll thru the parameters until ‘back’ is outlined and press the ‘Enter’ button. Repeat this procedure until the Ready screen is displayed.

HOBART SMARTCONNECT APP

The AM16 control includes built-in Wi-Fi, which allows you to connect your AM16 commercial dishwasher to our easy to-use smart phone app. With the free Hobart SmartConnect app, you can receive email alerts and details for any machine errors and view machine configuration, consumption and usage information. **NOTE:** For 240-volt, 380-volt and 440-volt supplies, contact Hobart Service to adjust the power value in the service settings for accurate energy consumption values.

Scan the QR Code to download the app:

Download on the App Store

GET IT ON Google Play

Getting Connected

Registering an Account

1. Open the app and tap on Register.
2. Enter your email and tap Send Verification Code. Then enter the code you receive in your email.
3. Provide the remaining information, including a password.
4. Tap Create.
5. Read and agree to the End User License Agreement and Privacy Policy. Tap Confirm when you are done.

   You can now use the app to connect to WiFi and pair your machine.

Connecting the AM16 to WiFi from the SmartConnect App

1. Tap on the Menu button, then tap on the Wi-Fi button.
2. Tap on Connect for Hobart.
3. Follow the guide in the app to prepare the machine for connection.
4. Tap on Confirm Instructions and tap Yes if the machine is ready for connection.
5. The machine will generate a code; enter this into the app and it will connect with the machine.
6. A list of available networks will be displayed. Select the network you want to connect with and enter the network password if necessary.
7. When the Wi-Fi connection is successful, the machine will indicate success and display an access code to pair with the app.
8. From the main screen of the app, tap on the Menu button, then tap on the + button and enter the access code to pair with the machine.

Connecting the AM16 to Wi-Fi from the Machine

1. Tap on the Menu button, select Manager Menu, enter pin 1001 and press Enter.

2. Scroll to Wi-Fi and press Enter.
3. Scroll and select Connection Assistant.
4. Scroll and select Search Network.
5. Scroll and select the available network you wish to connect to.
6. Enter the password for your network, then tap OK.
7. The machine will connect to your network, transfer data to the SmartConnect Cloud and display a connection code for the app.

If your machine won't connect to the Wi-Fi, go to our FAQs at **www.itwfoodequipment.com/smartconnect365/help** to troubleshoot your connection.

To Pair and Add your AM16 to the App

Before pairing, make sure your machine is connected to WiFi using the previous steps. To pair your Hobart AM16 to the SmartConnect App:

From the Dishmachine

1. Tap on the Menu button to enter the manager menu on your dish machine.
2. Select Manager Menu, enter pin 1001 and press Enter.
3. Scroll and select Wi-Fi.
4. Scroll and select Access Code.
5. An activation code will be generated and displayed. This code is valid for 48 hours.

From the App

1. Tap on the + button at the bottom of the machine list.
2. Enter the activation code found in the manager menu of the machine's touchscreen, then tap Submit.
3. Select your service provider from the drop-down menu.
4. Tap Finish. Your machine will now appear in the machine list on the home screen of the app.

For more information about SmartConnect, including usage instructions, troubleshooting for your WiFi connection and other general questions, visit the SmartConnect Help and FAQ guide at **www.itwfoodequipment.com/smartconnect365/help**.

NOTE: Errors will only be visible for viewing and troubleshooting if there is an active error for a paired machine. If the machine is in normal operational state, the error page will not be available to view for the machine.

SERVICE

COMPONENT LAYOUT

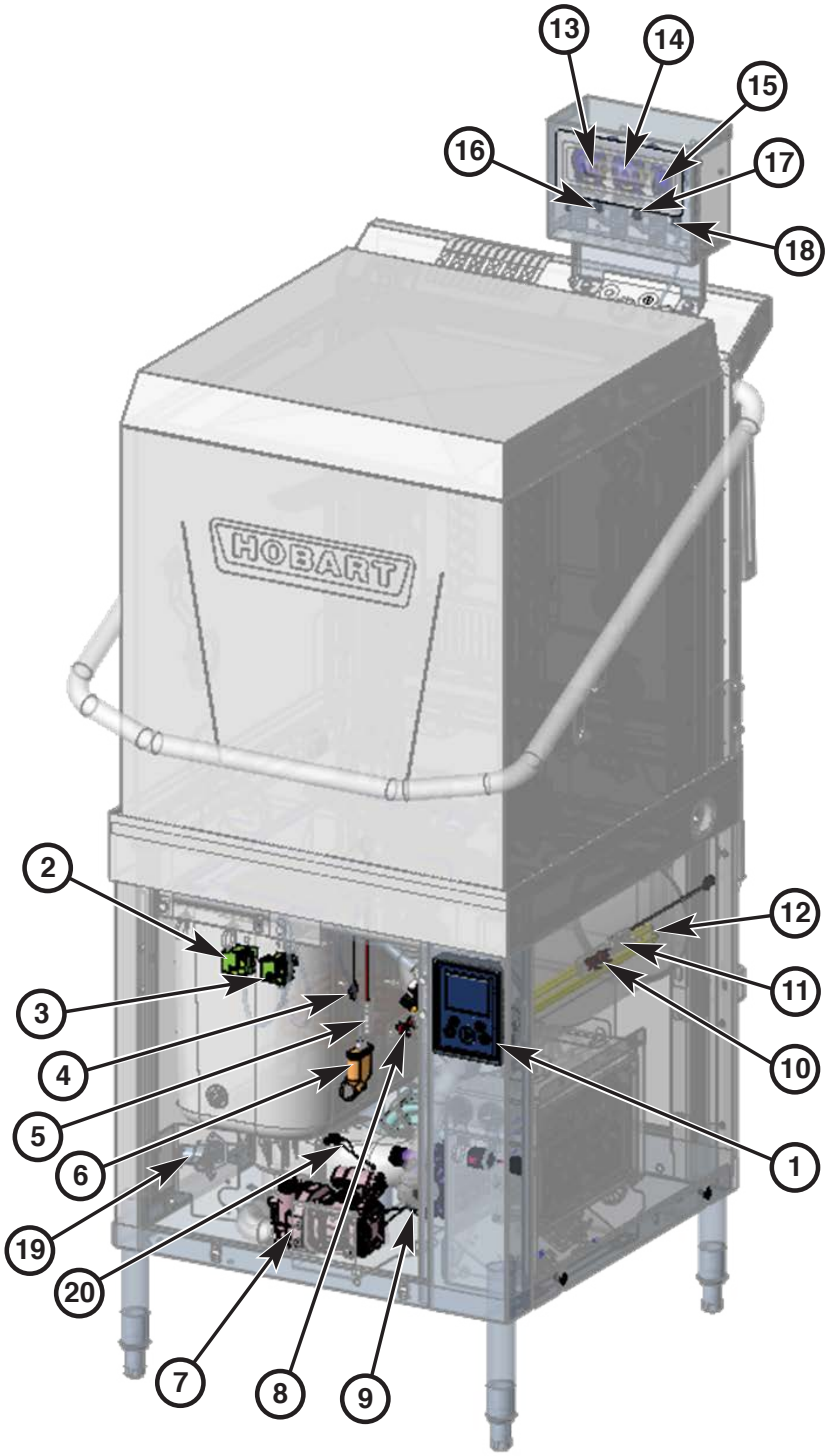

Number	Name/ Electrical Callout	Function
1	HMI (Display)	Visual display and interface that shows machine operation and programming.
2	Booster Heater Pressure Sensor (PRS2)	Supplies millivolt reading for water level in booster tank.
3	Wash Tank Pressure Sensor (PRS1)	Supplies millivolt reading for water level in wash tank.
4	Wash Tank Strainer Basket Reed Switch (LS2)	Detects if wash tank strainer basket is missing or improperly installed.
5	Wash Tank Thermistor (QTM1)	Monitors temperature in wash tank.
6	Wash Tank Air Trap	Provides input to pressure sensor for wash tank water level.
7	Drain Pump (MTR3)	Pumps the wash water out of the tank.
8	Wash Tank Overtemps (TAS2/ TAS3)	Wash tank high temperature protection.
9	Rinse Pump (MTR2)	Pumps water from the booster heater through the final rinse system.
10	Booster Heater Overtemps (TAS1/TAS4)	Booster heater high temperature protection.
11	Booster Heater Thermistor (QTM2)	Monitors temperature in booster tank.
12	Booster Heater (HTR2)	Heats water in booster tank for final rinse cycle.
13	Rinse Aid Pump (MTR8)	Pumps rinse aid into machine.
14	Sanitizer Pump (MTR9)	Pumps sanitizer into machine. (SCB models only.)
15	Detergent Pump (MTR7)	Pumps detergent into machine.
16	Rinse Aid Chemical Sensor (CHS1)	Detects if rinse aid is present.
17	Sanitizer Chemical Sensor (CHS3)	Detects if sanitizer is present. (SCB models only.)
18	Detergent Chemical Sensor (CHS2)	Detects if detergent is present.
19	Fill Valve (SOL1)	Supplies water to booster tank.
20	Final Rinse Thermistor (QTM3)	Monitors final rinse temperature. (High temp machine location shown. SCB models are located on the back center of the chamber.)

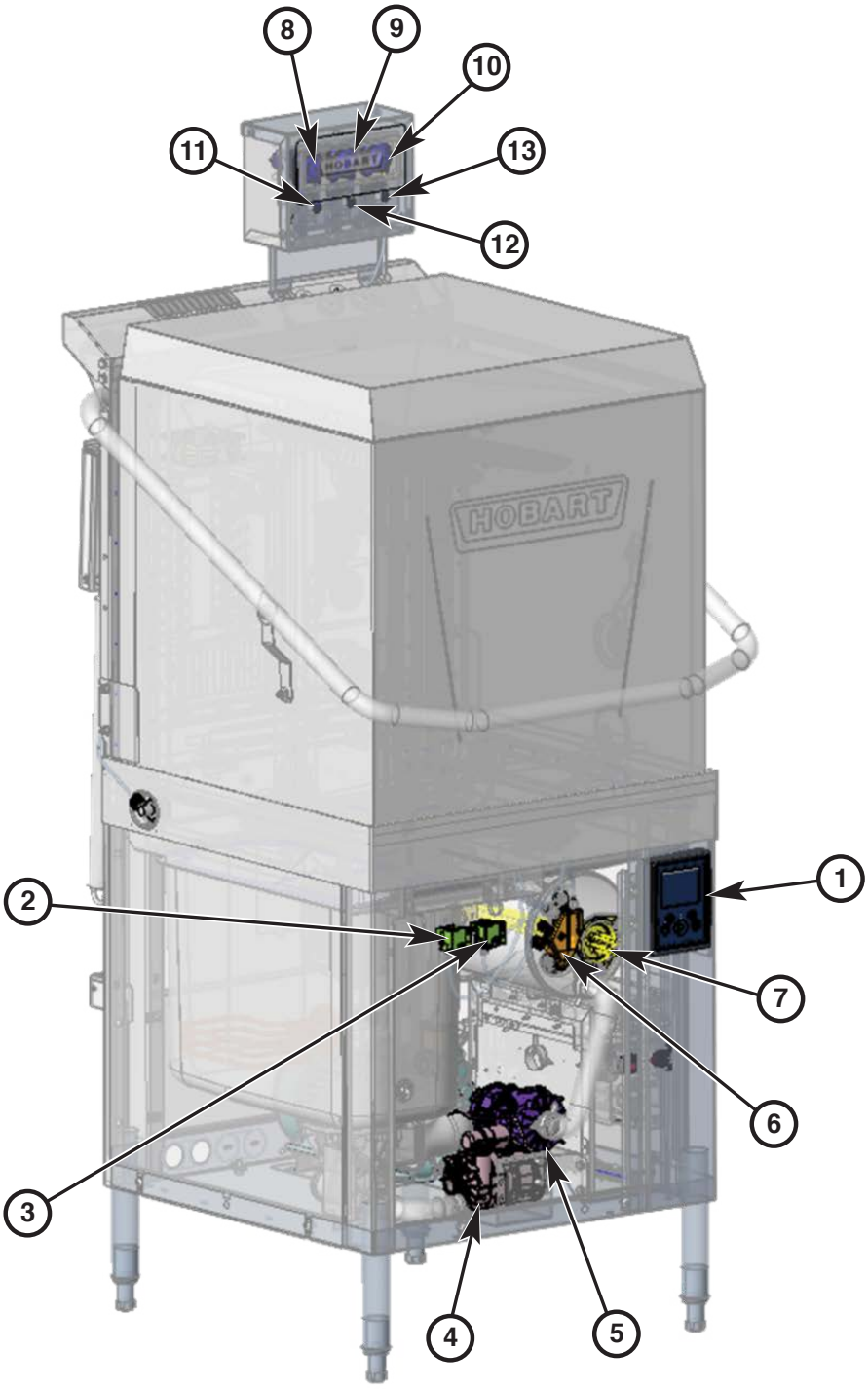
8
9
10
11
13
12
HOBART
1
2
7
6
3
4
5

Number	Name/ Electrical Callout	Function
1	HMI (Display)	Visual display and interface that shows machine operation and programming.
2	Booster Heater Pressure Sensor (PRS2)	Supplies millivolt reading for water level in booster tank.
3	Wash Tank Pressure Sensor (PRS1)	Supplies millivolt reading for water level in wash tank.
4	Drain Pump (MTR3)	Pumps the wash water out of the tank.
5	Rinse Pump (MTR2)	Pumps water from the booster heater through the final rinse system.
6	Booster Tank Air Trap	Provides input to pressure sensor for booster tank water level.
7	Booster Heater (HTR2)	Heats water in booster tank for final rinse cycle.
8	Rinse Aid Pump (MTR8)	Pumps rinse aid into machine.
9	Sanitizer Pump (MTR9)	Pumps sanitizer into machine. (SCB models only.)
10	Detergent Pump (MTR7)	Pumps detergent into machine.
11	Rinse Aid Chemical Sensor (CHS1)	Detects if rinse aid is present.
12	Sanitizer Chemical Sensor (CHS3)	Detects if sanitizer is present. (SCB models only.)
13	Detergent Chemical Sensor (CHS2)	Detects if detergent is present.

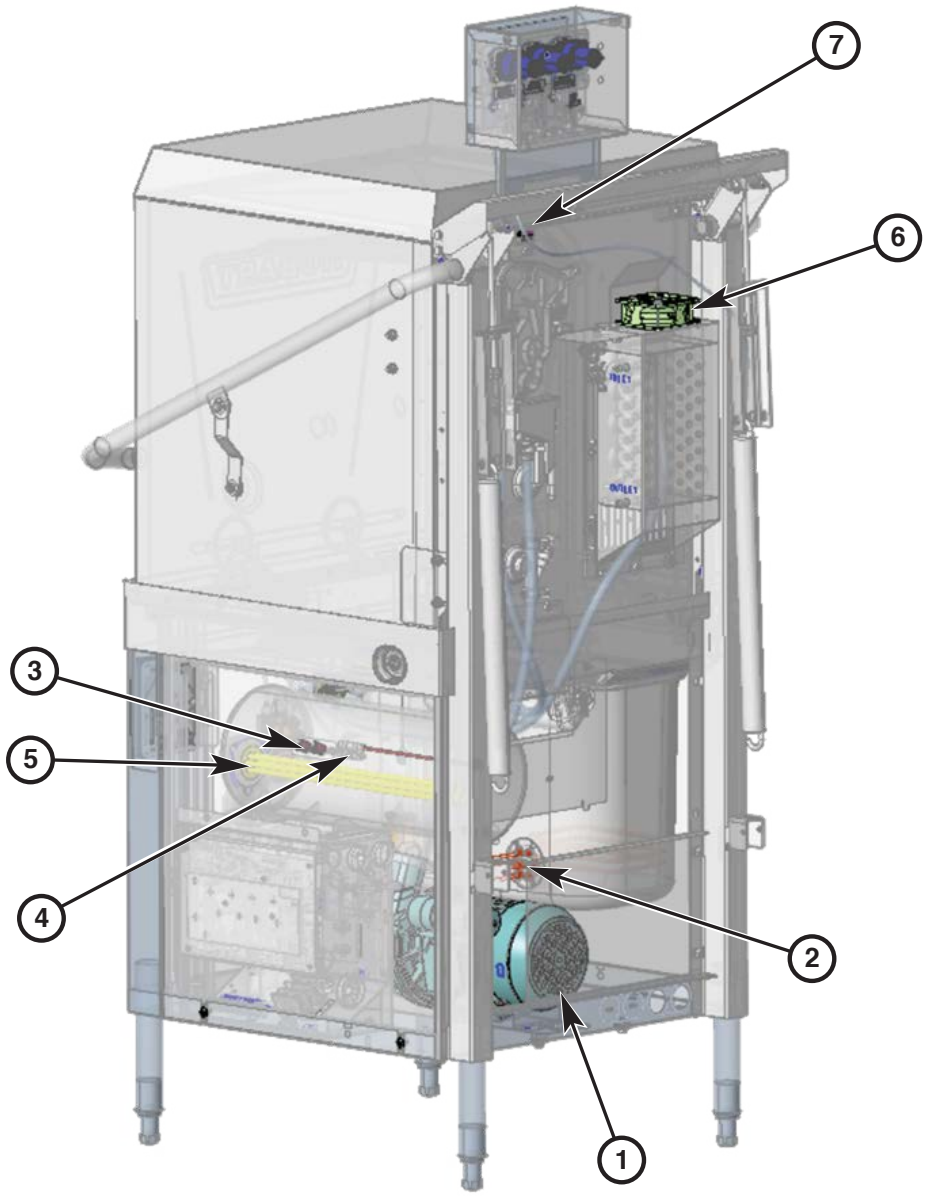
7
6
3
5
4
2
1

Number	Name/ Electrical Callout	Function
1	Wash Pump Motor (MTR1)	Recirculates wash water in wash tank.
2	Wash Tank Heater (HTR1)	Heats water in wash tank.
3	Booster Heater Overtemps (TAS1/TAS4)	Booster heater high temperature protection.
4	Booster Heater Thermistor (QTM2)	Monitors temperature in booster tank.
5	Booster Heater (HTR2)	Heats water in booster tank for final rinse cycle.
6	Ventless Fan (MTR5)	Pulls hot air/steam from wash chamber after rinse cycle. (Standard height ventless models only.)
7	Door Switch (LS1)	Detects door open or closed and prevents machine from running if door is opened.

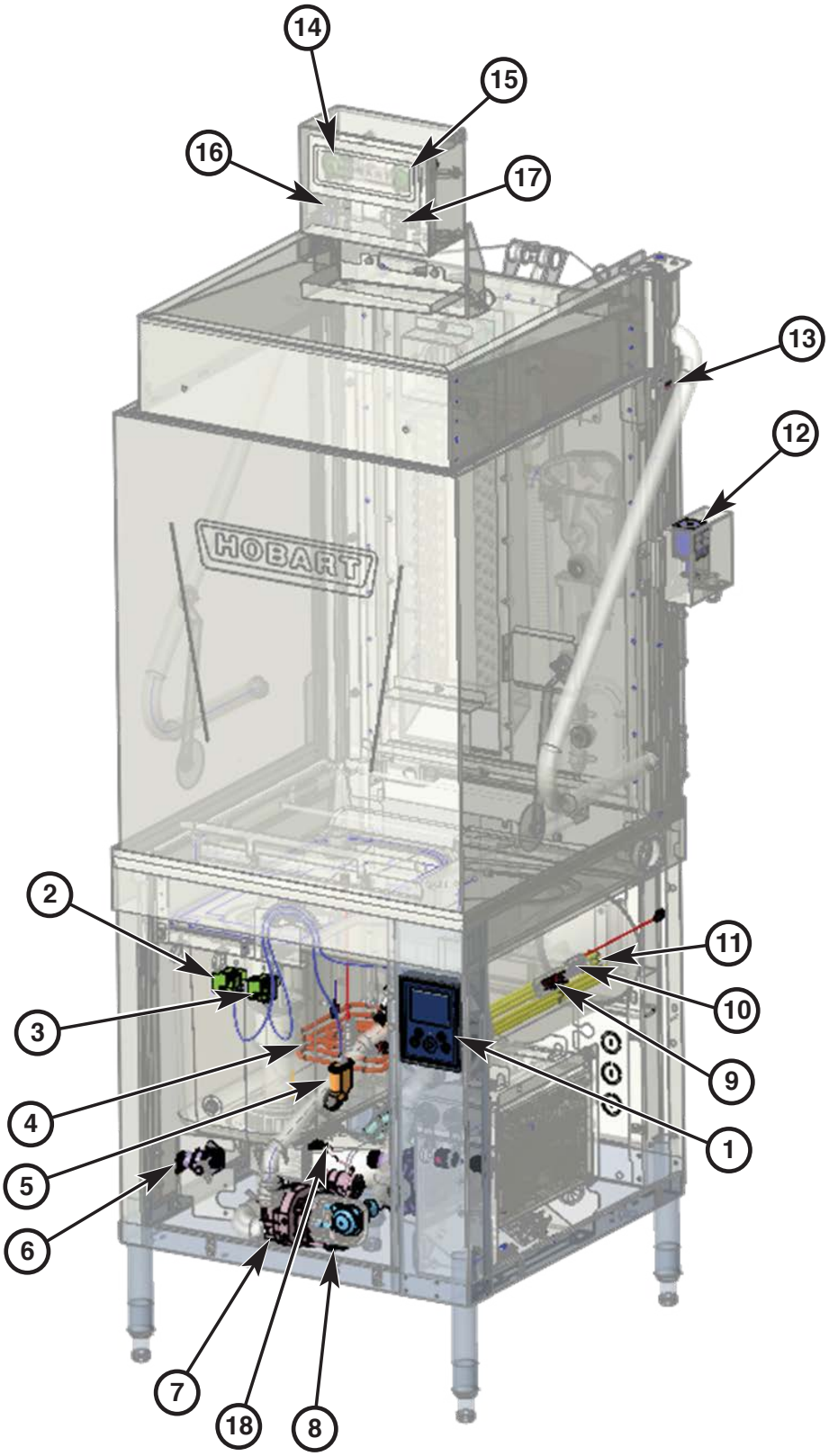
14
15
16
17
13
12
HOBART
2
11
3
10
9
4
1
5
6
7
18
8

Number	Name/ Electrical Callout	Function
1	HMI (Display)	Visual display and interface that shows machine operation and programming.
2	Booster Heater Pressure Sensor (PRS2)	Supplies millivolt reading for water level in booster tank.
3	Wash Tank Pressure Sensor (PRS1)	Supplies millivolt reading for water level in wash tank.
4	Wash Tank Heater (HTR1)	Heats water in wash tank.
5	Wash Tank Air Trap	Provides input to pressure sensor for wash tank water level.
6	Fill Valve (SOL1)	Supplies water to booster tank.
7	Drain Pump (MTR3)	Pumps the wash water out of the tank.
8	Delime Pump (MTR6)	Pumps delime solution into machine.
9	Booster Heater Overtemps (TAS1/TAS4)	Booster heater high temperature protection.
10	Booster Heater Thermistor (QTM2)	Monitors temperature in booster tank.
11	Booster Heater (HTR2)	Heats water in booster tank for final rinse cycle.
12	Door Lock Solenoid (SOL4)	Engages door lock during cycle. (Ventless models only.)
13	Door Switch (LS1)	Detects door open or closed and prevents machine from running if door is opened.
14	Rinse Aid Pump (MTR8)	Pumps rinse aid into machine.
15	Detergent Pump (MTR7)	Pumps detergent into machine.
16	Rinse Aid Chemical Sensor (CHS1)	Detects if rinse aid is present.
17	Detergent Chemical Sensor (CHS2)	Detects if detergent is present.
18	Final Rinse Thermistor (QTM3)	Monitors final rinse temperature. (High temp machine location shown. SCB models are located on the back center of the chamber.)

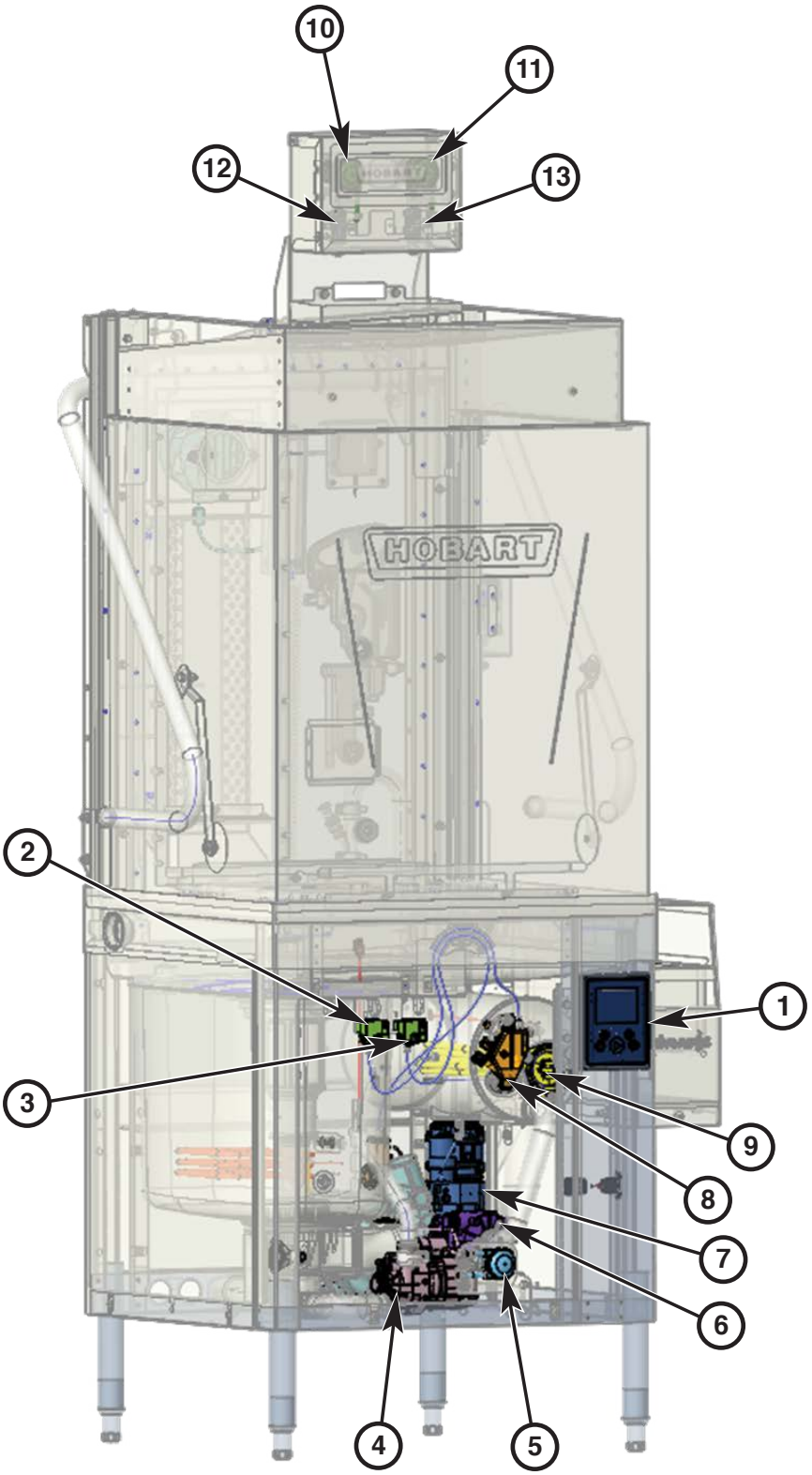
10
11
12
13
HOBART
2
1
3
9
8
7
6
4
5

Number	Name/ Electrical Callout	Function
1	HMI (Display)	Visual display and interface that shows machine operation and programming.
2	Booster Heater Pressure Sensor (PRS2)	Supplies millivolt reading for water level in booster tank.
3	Wash Tank Pressure Sensor (PRS1)	Supplies millivolt reading for water level in wash tank.
4	Drain Pump (MTR3)	Pumps the wash water out of the tank.
5	Delime Pump (MTR6)	Pumps delime solution into machine.
6	Rinse Pump (MTR2)	Pumps water from the booster heater through the final rinse system.
7	ASR Pump (MTR4)	Pumps soil from wash tank to external scrap basket. (ASR models only.)
8	Booster Tank Air Trap	Provides input to pressure sensor for booster tank water level.
9	Booster Heater (HTR2)	Heats water in booster tank for final rinse cycle.
10	Rinse Aid Pump (MTR8)	Pumps rinse aid into machine.
11	Detergent Pump (MTR7)	Pumps detergent into machine.
12	Rinse Aid Chemical Sensor (CHS1)	Detects if rinse aid is present.
13	Detergent Chemical Sensor (CHS2)	Detects if detergent is present.

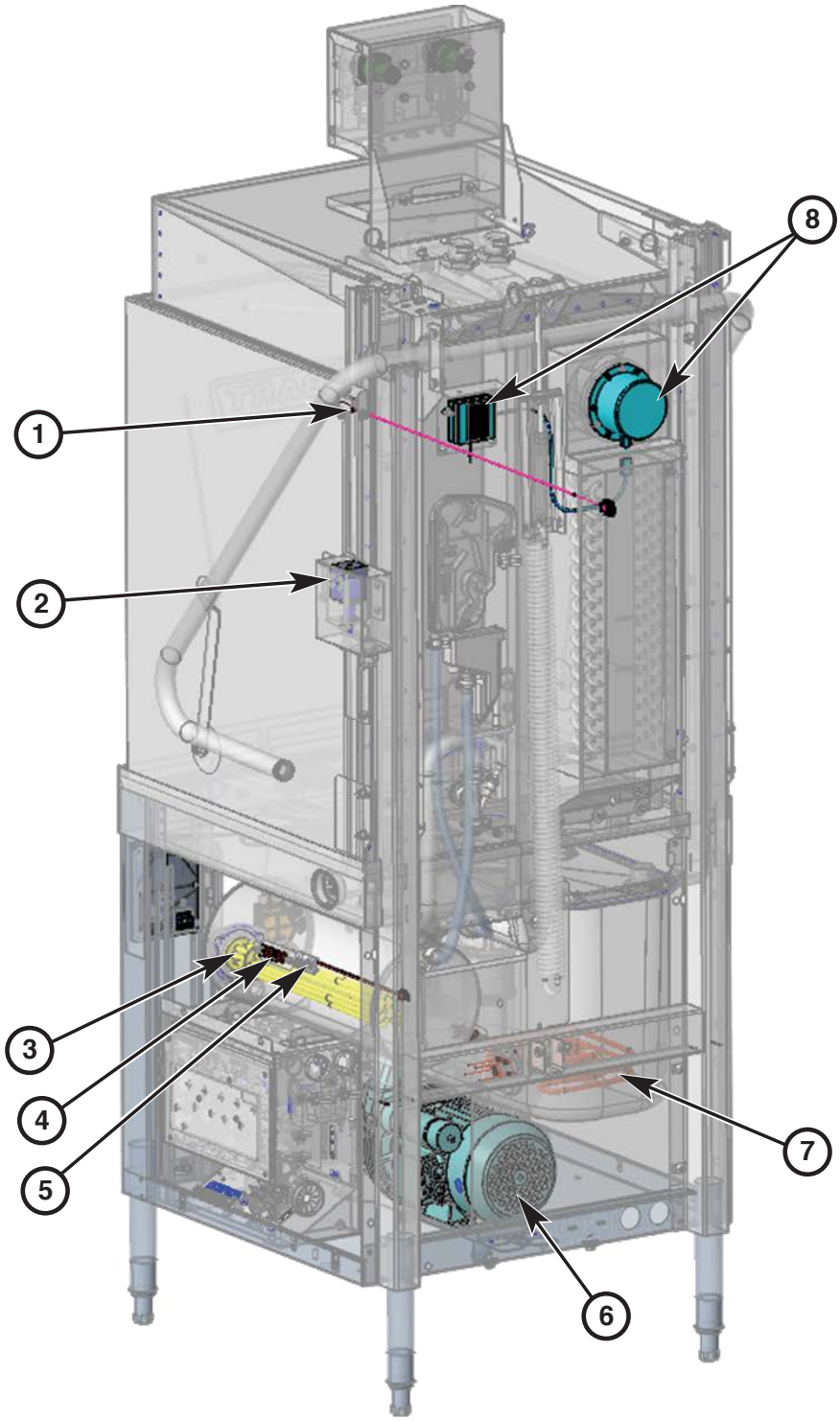
1
2
3
4
5
6
7
8

Number	Name/ Electrical Callout	Function
1	Door Switch (LS1)	Detects door open or closed and prevents machine from running if door is opened.
2	Door Lock Solenoid (SOL4)	Engages door lock during cycle. (Ventless models only.)
3	Booster Heater (HTR2)	Heats water in booster tank for final rinse cycle.
4	Booster Heater Overtemps (TAS1/TAS4)	Booster heater high temperature protection.
5	Booster Heater Thermistor (QTM2)	Monitors temperature in booster tank.
6	Wash Pump Motor (MTR1)	Recirculates wash water in wash tank.
7	Wash Tank Heater (HTR1)	Heats water in wash tank.
8	Ventless Fan & Controller (MTR5)	Pulls hot air/steam from wash chamber after rinse cycle. (Tall ventless models only.)

WIRING DIAGRAMS

The AM16 dish machine wiring diagrams are located behind the right side panel inside the machine.

For .PDF files of all AM16 wiring diagrams, scan the below QR code or visit **https://warewash.hobartcorp.com/am16wiringdiagrams**.



SEQUENCE OF OPERATIONS

Machine Off Display Not Lit

NOTE: Refer to wiring diagram when reviewing sequence of operations.

Initial Conditions

- Doors up (Door interlock LS1 open)
- Wash tank empty (pressure sensor at 0.5 V)
- Water supply requirements:
  - Non-Ventless models (110° F @ 15-65 PSI)
  - Ventless models (55° F @ 15-65 PSI)
  - SCB models (90° F @ 15-65 PSI)
- Voltage supplied to machine is correct.
- High limits are closed.

1. Line voltage present at the following components:
   a. Primary windings of transformer T1.
   b. J3.1 to F1.
   c. J3.3 to F2.
2. 120VAC from transformer T1 present at the following components:
   a. Neutral at TB5.5 and J3.5 of the control board.
   b. 120V present at J3.7, F3 fuse.
3. 9VAC from F4 fuse to neutral.
   a. 5VDC and 12VDC present at test points.
4. LED25 will be flashing and LED26 will always be on.

On Key Pressed

NOTE: Refer to wiring diagram when reviewing sequence of operations.

1. Display will be lit.
   a. Machine will begin fill cycle when tank fill is lower than lower float and door closed.
2. Control Board K11 energizes operating K11 N.O. contacts for VFC TB3.7 and TB3.8.
   NOTE: For Ventless models, K11 does not energize.

Fill / Preheat Cycle (Empty Tank)

NOTE: Refer to wiring diagram for model when reviewing sequence of operations.

NOTE: This is the fill cycle for when the machine has little to no water inside the sump.

1. Fill displayed with door closed.
   a. LS1 door interlock closed.
   b. Tank strainer interlock LS2 closed.
   c. ASR strainer interlock LS3 closed (if applicable).
2. Control board energizes K7 which energizes drain pump MTR3 for a 5-second pulse.
   a. Control board de-energizes K7 which de-energizes rinse pump MTR3 for a 5-second dwell.
   b. The control board re-energizes K7 which energizes drain pump MTR3 for a 5-second pulse.
   c. The control board de-energizes K7 which de-energizes drain pump MTR3.
3. Control board energizes K5 which energizes solenoid SOL1.
   a. For rapid fill kit, control board energizes K6 which energizes solenoid SOL2.
4. Booster tank begins to fill.
   a. Once booster reaches .74 V, control board energizes K8 which energizes CON1, energizing booster heating element HTR2.
      1) For rapid fill kit once tank reaches 0.72 V, control board energizes K9 which energizes CON2, energizing booster heating element HTR1.
   b. Booster will fill until 0.95 V.

c. Control board de-energizes K5 which de-energizes solenoid SOL1 once 0.95 V setting is reached.
d. Booster will continue heating until it reaches 100° F (38° C).
   1) For rapid fill, tank will continue heating until reaches 154° F (68° C).
e. Control board de-energizes K8 which de-energizes CON1, de-energizing HTR2.

5. Control board energizes K2 rinse pumps MTR2.
   a. MTR2 runs for 35 seconds.
      1) At this point, the sump tank is being filled through the booster.
   b. Control board de-energizes K3 which de-energizes rinse pump MTR2.
6. Steps 3 – 5 is repeated 5 times until tank has reached 1.9 V.
7. Once tank has reached 0.72 V, control energizes K9 which energizes contactor CON2 which energizes sump heater HTR1.
8. Tank will continue heating until 154° F (68° C).
   NOTE: For SCB machines, the tank will continue heating until 130° F (54° C).
9. Fill is now complete; wash temperature will be displayed, "Ready" will display when tank is above 151° F (66° C).
   NOTE: For SCB machines, the tank will display ready at 120° F (49° C).
   NOTE: HTR1 will continue to stay on, even after machine is ready. The tank will heat to 154° F (68° C) for SCB machines even though it says ready.
   NOTE: If tank or booster fail to reach ready temperature or water level set points, a FILL ERROR will occur.
   NOTE: A wash cycle ay be started once display bar on HMI is full.
   NOTE: For a rapid fill kit, if the sump has not finished filling, the sump will fill through the booster as well.

Fill Cycle – Full Tank Hot Water

NOTE: Refer to wiring diagram for model when reviewing sequence of operations.

NOTE: This is the fill cycle for when the machine detects water in the tank and the water is at a hot temperature.

1. Fill displayed with door closed.
   a. LS1 door interlock closed.
   b. Tank strainer interlock LS2 closed.
   c. ASR strainer interlock LS3 Closed (if applicable).
2. Control board energizes K5 which energizes solenoid SOL1.
3. Booster tank begins to fill.
   a. Once booster reaches 0.74 V, control board energizes K8 which energizes CON1, energizing booster heating element HTR2.
   b. Booster will fill until 0.95 V.
   c. Control board de-energizes K5 which de-energizes SOL1 once 0.95 V setting is reached.
   d. Booster will continue heating until it reaches 181° F (83° C).
   NOTE: For SCB machines the booster will continue heating until it reaches 130° F (54° C).
   e. Control board de-energizes K8 which de-energizes CON1, de-energizing HTR2.
4. Tank will continue heating until 154° F (68° C)
   NOTE: For SCB machines, tank will continue heating until 130° F (54° C).
5. Fill is now complete, wash temperature will be displayed, "Ready" will display when tank is above 151° F (66° C).
   NOTE: For SCB machines, tank will display ready at 120° F (49° C).
   NOTE: HTR1 will continue to stay on, even after machine is ready. The tank will heat until 154° F (68° C) for non-SCB machines and 130° F (54° C) for SCB machines even though it says ready.
   NOTE: If tank or booster fail to reach ready temperature or water level set points, a FILL ERROR will occur.
   NOTE: A wash cycle may be started once display bar on HMI is full.

Fill Cycle – Full Tank Cold Water

NOTE: Refer to wiring diagram for model when reviewing sequence of operations.

NOTE: This is the cycle for when the machine detects water in the tank and the water is at a hot temperature.

1. Fill displayed with door closed.
   a. LS1 door interlock closed.
   b. Tank strainer interlock LS2 closed.
   c. ASR strainer interlock LS3 Closed (if applicable).
2. Control board energizes K3 which energizes rinse pump MTR2 for 35 seconds.
3. Control board de-energizes K3, de-energizing rinse pump MTR2.
4. Control board energizes K7 which energizes drain pump motor MTR3 for 60 seconds.
5. Control board de-energizes K7 which de-energizes drain pump motor MTR3.
6. Control board energizes K5 which energizes solenoid SOL1.
   NOTE: For rapid fill kit, control board energizes K6 which energizes solenoid SOL2
7. Booster tank begins to fill.
   a. Once booster reaches 0.74 V, control board energizes K8 which energizes CON1, energizing booster heating element HTR1.
      NOTE: For rapid fill kit once tank reaches 0.72 V, control board energizes K9 wich energizes CON1, energizing booster heating element HTR1.
   b. Booster will fill until 0.95 V.
   c. Control board de-energizes K5 which de-energizes SOL1 once 0.95 V setting is reached.
   d. Booster will continue heating until it reaches 100° F (38° C).
      NOTE: For rapid fill kit, tank will continue heating until it reaches 154° F (68° C).
   e. Control board de-energizes K8 which de-energizes CON1, de-energizing HTR2.
8. Control board energizes K3 which energizes rinse pump MTR2.
   a. MTR2 furns for 35 seconds.
   b. Control board de-energizes K3, de-energizing rinse pump MTR2.
9. Steps 6 – 8 are repeated 5 times until tank has reached 1.9 V.
   NOTE: For rapid fill kit, control board de-energizes K6 wich de-energizes SOL2, once 1.9 V setting is reached.
10. Once tank has reahed 0.72 V, control board energizes K9 wich energizes CON2, energizing sump heater HTR1.
11. Tank will continue heating until 154° F (68° C).
    NOTE: For rapid fill kit, tank will continue heating until it reaches 154° F (68° C).
12. Fill is now complete, wash temperature will be displayed, "Ready" will display when tank is above 151° F (66° C).
    NOTE: For SCB machines, tank will display ready at 120° F (49° C).
    NOTE: HTR1 will continue to stay on, even after machine is ready. The tank will heat until 154° F (68° C) for non-SCB machines and 130° F (54° C) for SCB machines even though it says ready.
    NOTE: If tank or booster fail to reach ready temperature or water level set points, a FILL ERROR will occur.
    NOTE: A wash cycle may be started once display bar on HMI is full.
    NOTE: For a rapid fill kit, if the sump has not finished filling, the sump will fill through the booster as well.

Booster Temp Reaches Set-Point

NOTE: Refer to wiring diagram for model when reviewing sequence of operations.

1. Control board K8 de-energizes CON1 coil through the relay board. CON1 contacts open de-energizing booster heater HTR2.
   a. Booster heat LED 11 on relay board turns on.

Tank Temp Reaches Set-Point

NOTE: Refer to wiring diagram for model when reviewing sequence of operations.

1. Control board K9 de-energizes CON2 coil through the relay board. CON2 contacts open de-energizing booster heater HTR1.
   a. Booster heat LED 12 on relay board turns on.

Cycle Selection

NOTE: Refer to wiring diagram for model when reviewing sequence of operations.

Choosing a Cycle

1. The AM16 allows for 1-minute, 2-minute, 4-minute, and 6-minute cycles.
   a. Cycles can be selected by either pressing the “Cycle Select” touch button or the “Cycle Select” icon in the top left corner of the screen.

Wash Cycle

NOTE: Refer to wiring diagram for model when reviewing sequence of operations.

1. To begin a wash cycle, first open the hood.
   a. Door interlock LS1 will be open.
   b. Tank strainer LS2 is closed.
   c. ASR strainer interlock LS3 closed (if applicable).
2. Close the upper hood which will begin the cycle.
   a. Door interlock LS1 will be closed.
   b. WASH LED on relay board turns on.
3. The WASH icon and water temperature are displayed. Progress bar resets.
4. Wash cycle continues for time selected.
   a. Control board energizes K1 energizing wash pump contactor CON3, allowing wash pump MTR1 to run for the selected time.
      NOTE: For BAS, ASR, and ADV machines, machine line voltage added to DPS terminals TB3.3 and TB3.4.
   b. For SCB unites, when C3 energizes, C3 AUX contacts close.
      NOTE: This will energize only 2 of the 3 heating elements from the active heater.
   c. For base(vl) and SCB machines, 8 seconds into the cycle control board K7 energizes drain pump MTR3 will run for 1.8 seconds.
   d. For SCB and SVLT machines, control board energizes FET5 on extension card A6, energizing detergent pump MTR7.
      NOTE: After specified duration, control board de-energizes FET5 on extension card A6, de-energizing detergent pump MTR7.
5. Wash cycle completed.
   a. Control board de-energized K1, de-energizing wash pump contactor CON3 which stops wash pump MTR1.
      NOTE: WASH LED on relay board turns off.
   b. For BAS, ASR and ADV machines, machine line voltage removed from DPS terminals TB3.3 and TB 3.4.
   c. Dishwasher enters a 5 second dwell cycle.
      NOTE: Water level is monitored for 3 seconds followed by control board energizing K7 which energizes drain pump MTR3 for minimum 2 seconds or until specified water level 1.82 V is reahed.
      NOTE: If DWT is on machine, control board K10 energizes TB3.5 and TB3.6 will have 120V present. SOL3 will energize for the same duration as the drain pump.
      NOTE: Progress bar will be filled 3/4 after wash cycle is completed.
      NOTE: When Drain pump is energized, the DWT valve might have a delay before energizing.

ASR Cycle

NOTE: Refer to wiring diagram for model when reviewing sequence of operations.

NOTE: This feature is on ASR, ADV and SVLT machines. It will occur 8 seconds into each wash cycle to remove food soil from the machine.

1. Control board de-energizes K1 which de-energizes wash pump contactor CON3, de-energizing wash pump motor MTR1.
2. Water level is monitored for 6 seconds before the machine decides how long to run ASR pump MTR4.
3. Control board denergizes K1 on extension card ECA7, energizing ASR pump motor MTR4.
   NOTE: For normal operation, MTR4 will run for 0.3 seconds for 5 cycles, followed by 1 cycle of 1.9 seconds.
4. Control board de-energizes K1 on extension card ECA7, de-energizing ASR pump motor MTR4.
5. Control board energizes K1 which energizes wash pump contactor CON3, re-energizing wash pump MTR1.
   NOTE: If excess soil is detected, the ASR cycle can be extended. Refer to service manual.

Rinse Cycle Begins

NOTE: Refer to wiring diagram for model when reviewing sequence of operations.

1. Control board energizes K3 which energizes rinse pump MTR2.
2. The RINSE icon and final rinse temperature are displayed.
3. For BAS, ASR and ADV machines, machine line voltage present at RPS terminals TB3.1 and TB3.2.
4. For SCB machines, control board energizes FET2 on extension card A6, energizing sanitizer motor MTR9.
5. Rinse cycle continues for the programmed time. Default is 10 seconds.
6. Control board de-energizes K3, de-energizing rinse pump MTR2.

Rinse Cycle Completed

NOTE: Refer to wiring diagram for model when reviewing sequence of operations.

1. Control board enters 10 second sani-dwell. RINSE iconis displayed until sani-dwell cycle is complete.
2. Progress bar will be full after sani-dwell is complete.
   NOTE: On Ventless models, the progress bar will reset to become a ventless fan progress bar.
3. For BAS, ASR and ADV machines, machine line voltage removed from terminals RPS1 and RPS2.
4. For SCB machines, control board de-energizes FET2 on extension card A6, de-energizing sanitizer motor MTR9.
5. Control board energizes K5 which energizes solenoid SOL1 to refill booster.
6. For SCB and SVLT machines, control board energizes FET3 on extension card A6, energizing rinse aid pump MTR8.
   NOTE: After specified duration, control board de-energizes FET3 on extension card A6, de-energizing rinse aid pump MTR8.
7. Once booster has reached full set point, control board de-energizes K5 which de-energizes solenoid SOL1 to refill booster.
8. Tank heat and Booster temperatures continue to be monitored and maintained by the control board through the relay board.
   a. Once booster reaches .95 V, control board energizes K8 which energizes contactor CON1, energizing booster heater HTR2.

Condense Cycle (Ventless Models Only)

NOTE: Refer to wiring diagram for model when reviewing sequence of operations.

1. Progress bar will reset for ventless cycle duration.
   NOTE: Display will change to show ventless fan.
2. Control board energizes K5 which energizes solenoid SOL1 to refill booster.
3. Control board energizes FET4 on extension card A6, energizing fan motor MTR5.
   NOTE: Fan motor will operate 20 seconds for standard height models and 30 seconds for HTS models.
4. After motor is done running, control board d-energizes FET4 on extension card A6, de-energizing fan motor MTR5.
5. Once booster has reached full set point, control board de-energizes K5 which will de-energize solenoid SOL1.
6. Ventless progress bar will be full at the end of the condensing cycle.
7. Tank temperature is displayed.

Drain Cycle (Powered Down)

NOTE: Refer to wiring diagram for model when reviewing sequence of operations.

1. Press and hold power button for 5 seconds.
   a. Progress bar will fill up while holding power button.
   b. Drain visual will be displayed on the HMI once progress bar is full.
2. Heating elements shut off.
   a. Control board de-energizes K8 which will de-energize CON1, de-energizing booster heating element HTR2.
   b. Control board de-energizes K9 which will de-energize CON2, de-energizing tank heating element HTR1.
3. On ASR, ADV and SVLT machines.
   a. Control board energizes K1 on extension card ECA7, energizing ASR pump MTR4 for 2 seconds.
   b. Control board de-energizes K1 on extension card ECA7, de-energizing ASR pump MTR4.
4. Control board K7 energizes drain pump MTR3 which will run for 90 seconds.
5. Control board K7 de-energizes drain pump MTR3.
6. Control board energizes K3 which energizes rinse pump MTR2 for 35 seconds.
7. Control board de-energizes K3 which will de-energize rinse pump MTR2.
8. Control board K7 energizes drain pump MTR3 for an additional 30 seconds.
9. Control board K7 de-energizes drain pump MTR3.
10. Drain pump will begin pulsing.
    a. Control board energizes K7 which energizes drain pump MTR3 for 3 seconds.
    b. Control board de-energizes K7 which de-energizes drain pump MTR3 for 3 seconds
    c. This will repeat 2 times.
11. Machine will now be shut off.
    NOTE: For machines with a DWT, control board k10 energizes TB3.5 and TB3.6 will have 120V present.

Drain Cycle (Manual Drain)

NOTE: Refer to wiring diagram for model when reviewing sequence of operations.

1. Press and hold power button for 5 seconds.
   a. Progress bar will fill up while holding power button.
   b. Drain visual will be displayed on the HMI once progress bar is full.
2. Heating elements shut off.
   a. Control board de-energizes K8 which will de-energize CON1, de-energizing booster heating element HTR2.

b. Control board de-energizes K9 which will de-energize CON2, de-energizing tank heating element HTR1.

3. On ASR, ADV and SVLT machines.
   a. Control board energizes K1 on extension card ECA7, energizing ASR pump MTR4 for 2 seconds.
   b. Control board de-energizes K1 on extension card ECA7, de-energizing ASR pump MTR4.
4. Control board K7 energizes drain pump MTR3 which will run for 90 seconds.
5. Control board K7 de-energizes drain pump MTR3.
6. Drain pump will begin pulsing.
   a. Control board energizes K7 which energizes drain pump MTR3 for 3 seconds.
   b. Control board de-energizes K7 which de-energizes drain pump MTR3 for 3 seconds
   c. This will repeat 2 times.
7. Machine will now go into a fill cycle.
   a. Please refer to 'fill cycle'.
   b. Cycle will start with emptying the booster.

   NOTE: For machines with a DWT, control board k10 energizes TB3.5 and TB3.6 will have 120V present.

Delime Cycle – Manual

NOTE: Refer to wiring diagram for model when reviewing sequence of operations.

1. Press the delime symbol located on the HMI display to start a delime cycle.
2. Use the arrows to select yes when prompted.
3. Open the door and remove the strainer.
   a. Door interlock LS1 will now be open.
   b. Tank interlock LS2 will now be open.
4. Once strainer has been cleaned place the strainer back into the machine.
   a. Tank strainer interlock LS2 will be closed.
5. Close the door.
   a. Door interlock LS1 will now be closed.
6. Press the selection arrow on the display.
7. Machine will go int a drain cycle.
   a. Machine is only emptying the sump.
   b. Refer to 'drain cycle' steps 2 through 5.

   NOTE: Drain pump will run for 90 seconds.
8. Machine will prompt user to insert delime into machine.
   a. Open the lower door and insert the recommended delime dosage.

   NOTE: Door interlock LS1 will be open.

   b. After delime is used,d close the lower door.

   NOTE: Door interlock LS1 will be closed.

   c. Press the selection arrow.

   NOTE: Door must be closed before selection arrow will appear on HMI.
9. Machine will go into a fill cycle.

   NOTE: Refer to 'fill cycle' for procedure.

   NOTE: Process will start with emptying the booster sinde it is already full.
10. Machine will go into the delime wash cycle.

    NOTE: Refer to 'wash cycle' for procedure.

    a. Cycle length will be 600 seconds.
11. Machine will go into drain cycle.

    NOTE: Refer to 'drain cycle' steps 2 through 7.
12. Machine will go into fill cycle.

    NOTE: Refer to 'fill cycle'.

13. Machine will go into drain cycle.
    NOTE: Refer to 'drain cycle' steps 2 through 9.
    NOTE: During the delime cycle, voltage will not be present at DPS and RPS terminals.

Delime Cycle – Automatic

NOTE: Refer to wiring diagram for model when reviewing sequence of operations.

1. Press the delime symbol located on the HMI display to start a delime cycle.
2. Use the arrows to select yes when prompted.
3. Open the door and remove the strainer.
   a. Door interlock LS1 will now be open.
   b. Tank interlock LS2 will now be open.
4. Once strainer has been cleaned place the strainer back into the machine.
   a. Tank strainer interlock LS2 will be closed.
5. Close the door.
   a. Door interlock LS1 will now be closed.
6. Press the selection arrow on the display.
7. Machine will go int a drain cycle.
   a. Machine is only emptying the sump.
   b. Refer to 'drain cycle' steps 2 through 5.
   NOTE: Drain pump will run for 90 seconds.
8. Control board energizes FET1 on extension card A6, energizing delime pump MTR6.
   a. Delime pump will run for 40, 60 or 120 seconds depending on concentrations.
9. Control board de-energizes FET1 on extension card A6, de-energizing delime pump MTR6.
10. Control board energizes K3 which energizes rinse pump MTR2.
    a. Rinse pump will run for 35 seconds.
11. Control board de-energizes K3 which cd-energizes rinse pump MTR2.
12. Control board energizes FET1 on extension card A6, energizing delime pump MTR6.
    a. Delime pump will run for 40, 60 or 120 seconds depending on concentrations.
13. Control board de-energizes FET1 on extension card A6, de-energizing delime pump MTR6.
14. Control board energizes K5 which energizes booster fill valve SOL1.
15. Booster tank begins to fill.
    a. Once booster reaches 0.74 V, control board energizes K8 which energizes CON1, energizing booster heating element HTR2.
    b. Booster will fill until 0.95 V.
    c. Control board de-energizes K5 which de-energizes SOL1 once 0.95 V setting is reached.
    d. Booster will continue heating until it reaches 100° F (38° C).
    e. Control board de-energizes K8 which de-energizes CON1, de-energizing HTR2.
16. Control board energizes K3 which energizes rinse pump MTR2.
    a. Rinse pump MTR2 will run for 35 seconds.
    NOTE: At this point, the sump tank is being filled through the booster.
    b. Control board de-energizes K3 which de-energizes rinse pump MTR2.
17. Steps 12 through 16 are repeated 5 times until tank has reached 1.9 V.
    a. Once tank reaches 0.72 V, control board energizes K9 which energizes CON2, energizing sump heater heating HTR1.
    NOTE: Once tank temperature reaches 115° F (46° C) control board de-energizes K9 which de-energizes CON2, de-energizing sump heater HTR1.
18. Machine will go into the delime wash cycle.
    a. Refer to 'wash cycle' for procedure.
    NOTE: Cycle length will be 600 seconds.
19. Control board energizes K5 which energizes booster fill valve SOL1.
    a. Booster will fill until 0.95 V.
    b. Control board de-energizes K5 which de-energizes SOL1 once 0.95 V setting is reached.

20. Control board energizes K7 which energizes drain pump MTR3.
    a. Drain pump will run for 90 seconds.
    b. 2 seconds into the drain cycle, control board energizes K3 which energizes rinse pump MTR2.
    c. Rinse pump MTR2 will run for 35 seconds.
    d. Control board de-energizes K3 which de-energizes rinse pump MTR2.
21. Machine will go into a fill cycle.
    Refer to 'fill cycle'.
22. Machine will go into a wash cycle.
    a. Refer to 'wash cycle' for procedure.
    NOTE: Cycle length will be 60 seconds.
23. Machine enters drain cycle.
    a. Refer to 'drain cycle' steps 2 through 9.
    NOTE: During the delime cycle, voltage will not be present at DPS and RPS terminals.

TROUBLESHOOTING CHART

NOTE: Refer to Troubleshooting Error Codes on page 42 when the machine displays an error code.

SYMPTOM	POSSIBLE CAUSE
No machine operation.	1. Machine off. Turn the machine on. 2. Blown fuse or tripped circuit breaker at power supply. 3. Fuse F3 or F4 on control board open.
No display.	1. No power to the machine. Fuse blown or circuit breaker tripped. 2. Fuse F3 or F4 on control board open. 3. Missing 120VAC from T1 transformer. 4. HMI Module (display) unplugged or crossed plugs from control board or display board malfunction.
Machine will not fill.	**NOTE:** Fill time and warm up could be as high as 25 minutes. 1. Water supply may be off; make sure water supply valve is open. 2. Dirty strainer at fill hose connection causing reduced water flow. Turn off hot and/or cold-water supply(s), remove fill hose and clean strainer. Reassemble. 3. Fill valve strainer clogged. Clean as required. 4. Building supply regulator, backflow preventer, etc. causing reduced water flow. 5. Signal voltage, 120VAC, is not present at outputs J14-1 & J14-3 (fill valve). 6. Fill valve plumbed incorrectly. Verify water line from booster fill valve (SOL1) to air gap. 7. Strainer interlock switch (LS2) malfunction.
Repeatedly blows fuse or trips circuit breaker(s).	1. Undersized fuse or circuit breaker. 2. Short circuit in internal wiring or electrical component. 3. Incorrect voltage or heater. 4. If GFCI breaker, ensure installed and wired properly.
Machine will not drain.	1. Drain height over 40” above finished floor.
Door lock will not engage.	1. Bad door lock solenoid. 2. Bad wire connections. 3. Broken, bent or jammed door lock actuator lever. 4. Door lock receiver not aligned. 5. Malfunctioning extension card (A6) and/or power supply.
Wash pump will not run.	1. Obstruction in pump. 2. Wash pump motor malfunction. 3. No 208 or 240VAC at wash pump contactor (CON3) or no voltage on control board at TP DO1. 4. Pump motor capacitor malfunction. 5. Loose wire connection(s).
Low / no wash tank heat or booster heat.	1. Ensure sufficient water level in tank. 2. Ensure heating element is clean and free of excessive lime scale and/or debris. 3. Check wire connections, contactor, voltage and heater current.
Leaking at DWER coil assembly.	1. Check hose connections. 2. Damaged coil.
ASR overflowing (if machine is equipped with ASR)	1. Ensure drain line is not clogged. 2. Ensure ASR basket is clean and properly installed.

SYMPTOM	POSSIBLE CAUSE
ASR not functioning (if machine is equipped with ASR)	1. ASR pump obstruction. 2. ASR motor malfunction. 3. No voltage to ASR pump.
Leaking valve.	1. Hose connection at valve is leaking. Ensure hose gasket is seated properly and not worn or cut. 2. Malfunctioning solenoid valve.
Rinse water does not reach 180°F during rinse cycle.	1. Rinse pump malfunction. 2. Defective final rinse thermistor. 3. Voltage to booster heater circuit not correct. 4. Booster heating element malfunction. 5. Excessive lime scale. Booster heating element coated with lime scale. 6. Check for restrictions in final rinse line. Kinked hose. 7. Incorrect booster heater element installed. 8. Booster heater contactor (CON1) malfunction. 9. Loose wire connections.
No final rinse.	1. Rinse pump motor malfunction. 2. Clogged final rinse arms. 3. Excessive lime scale buildup in rinse system. 4. Loose wire connections.
Booster heater does not heat at all.	1. No power to booster circuit. 2. Defective contactor (CON1). 3. Loose wire connections. 4. Defective thermistor. 5. Defective booster heating element. 6. 120VAC not present at booster contactor (CON1). Check voltage on control board at TP DO8. 7. Excessive lime scale buildup on booster heating element.
Booster heating element burns out repeatedly.	1. Element powered with low or no water in booster. 2. Incorrect booster heater element and/or voltage. Verify with machine data plate. 3. Contactor malfunction (CON1). 4. Improper pressure switch connections (PRS2). 5. Excessive lime scale buildup on booster heating element. 6. Kinked booster vent hose.
Hobart supplied chemical pumps not energizing.	1. Fuse F1 on relay board open. 2. Loose connection(s) at chemical pump(s). 3. Chemical pump malfunction. 4. Extension card (A6) malfunction. 5. Power supply (PS1) lost 24VDC output. 6. Incorrect machine type selected. 7. Incorrect chemical pump parameter setting.
Not injecting delime chemical (machines equipped with Auto Delime)	1. Insufficient chemical supply in bottle. 2. Worn chemical tube or roller. 3. Standpipe is not all the way inserted into bottle. 4. Air bubbles in chemical tubing. 5. Chemical pump malfunction. 6. Loose clamp(s) connections at chemical fittings. 7. Hole in chemical tube causing bubbles. 8. Chemical line clogged.

SYMPTOM	POSSIBLE CAUSE
Excessive steam or water vapor after cycle is complete (Ventless models only)	1. Incoming cold-water supply is too warm. 2. Cold water line strainer clogged causing low flow. 3. Blower motor malfunction.
Ware / pans not clean.	1. Strainers clogged causing inadequate water supply to pump. 2. Loss of water pressure due to pump obstruction. Check pump and drain intake for obstruction. 3. Obstructions in wash and/or rinse arms causing them to not rotate properly. 4. Excessive soil in machine – scrap ware before loading into machine. 5. Improper rack loading. 6. Wash tank water temperature too low. Wash temperature on display during WASH cycle should be 150°F minimum for high temperature sanitizing machines; 120°F minimum for chemical sanitizing machines. 7. Excessive lime scale throughout wash and rinse system. Delime machine as required. 8. Ensure chemical dispenser is operating properly.
Spotting on ware.	1. Improperly loaded racks. 2. Rinse water temperature too low. 3. Improper type or concentration of detergent and/or rinse aid – contact chemical supplier. 4. Hard water – excessive lime scale in machine. 3 grains of hardness or less recommended. 5. Excessive soil in machine; scrap ware before loading in machine. Ensure wash tank is drained and cleaned as required. 6. Loss of water pressure due to pump obstruction. Check for obstruction at the pump intake.

TROUBLESHOOTING ERROR CODES

Refer to the Component Layout diagrams section (page 14) for component locations.

For all Analog Inputs (AI), Digital Inputs (DI) and Digital Outputs (DO) shown in the following error code chart, refer to the Programming section on page 62 of this manual to access Diagnostics to see these values.

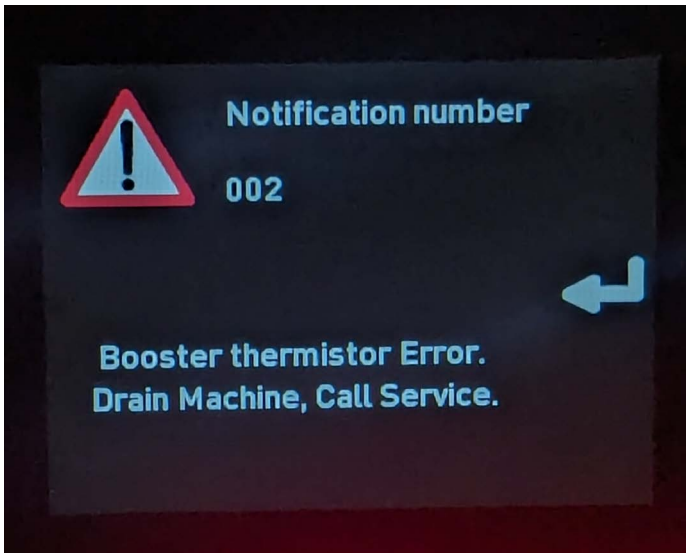

Error Code Example

Error Number	Message in Display	Description
001	**Message in Display**	**Booster thermistor Error. Drain Machine, Call Service.**
	Software	• Temperature at the booster sensor QTM2 (AI1) is greater than or equal to 239°F. • Short circuit of sensor QTM2 (AI1).
	Machine States	Fill program / Ready / Wash program.
	Start Key / Beeper	Permanent red light when machine "ON". / One-time actuation of 5 s.
	Machine Reaction	Machine is switched off / display remains switched on.
	Locked Programs	Fill program / Wash program / Ready
	Enabled Programs	Drain program / Power Down
	Acknowledgment	Acknowledge the message by pressing the Enter button on the touch screen if the temperature at QTM2 (AI1) is <239°F. The machine remains in the current mode. The display will turn off.
	Possible Problems	1. Check booster thermistor. 2. Check connections and wiring back to board. 3. Check for leaks onto wiring and connectors.
	Tech Tips	1. Monitor in Analog Inputs display mode while troubleshooting - actual value is shown while unit is in operation. Refer to the Programming section for accessing the Analogue Inputs display mode in the Parameters menu. 2. Unplugging thermistor should result in Error 002. 3. If water is getting into connector, add dielectric grease to area to protect.

Error Number	Message in Display	Description
002	**Message in Display**	**Booster thermistor Error. Drain Machine, Call Service.**
	Software	• The temperature sensor of the booster QTM2 (AI1) is ≤ 32°F. • Wire interruption (open circuit) of the sensor QTM2 (AI1).
	Machine States	Fill program/ Ready / Wash program
	Start Key / Beeper	Permanent red light when machine "ON". / One-time actuation of 5 s.
	Machine Reaction	Machine is switched off / display remains switched on.
	Locked Programs	Fill program / Wash program / Ready
	Enabled Programs	Drain program / Power Down
	Acknowledgment	Acknowledge the message by pressing the Enter button on the touch screen if the temperature at QTM2 (AI1) is >32°F. The machine remains in the current running mode. The display will turn off.
	Possible Problems	1. Check booster thermistor. 2. Check connections and wiring back to board. 3. Check for leaks onto wiring and connectors.
	Tech Tips	1. Monitor in Analog Inputs display mode while troubleshooting - actual value is shown while unit is in operation. Refer to the Programming section for accessing the Analogue Inputs display mode in the Parameters menu. 2. Unplugging thermistor should result in Error 002. 3. If water is getting into connector, add dielectric grease to area to protect.
003	**Message in Display**	**Booster temperature not reached during fill cycle.**
	Software	The set-point temperature on the temperature sensor booster QTM2 (AI1) was not reached within the time out setting. The timer starts when the booster heater comes on.
	Machine States	Fill program
	Start Key / Beeper	Green - red alternating flashing if machine is ready for operation.
	Machine Reaction	Fill program is continued. Monitoring of booster heating continues. The fault is only triggered once. Further triggering only takes place after the message has been acknowledged.
	Locked Programs	Wash program
	Enabled Programs	Fill program / Drain program
	Acknowledgment	Acknowledge the message by pressing the Enter button on the touch screen. The machine remains in the current mode.
	Possible Problems	1. Check High limit. 2. Check booster thermistor for proper response in service diagnostics menu - check for damage and tightness. 3. Check booster heater, wiring and contactor. 4. Check incoming water temperature. 5. Ensure thermal paste between thermistor and booster.
	Tech Tips	1. Use service diagnostics menu to verify water levels, heater energizing, temperature response, thermistors, high limits, fill rates. 2. If water is getting into connector, add dielectric grease to area to protect.

Error Number	Message in Display	Description
004	**Message in Display**	**Booster temperature not reached during wash cycle.**
	Software	The set-point temperature on the booster temperature sensor QTM2 (AI1) was not reached within the time out setting.
	Machine States	Wash program
	Start Key / Beeper	Green - red alternating flashing if machine is ready for operation/ control twice briefly on off (1 second after program end).
	Machine Reaction	A Wash program is continued after the expiration of the timer.
	Locked Programs	Wash program
	Enabled Programs	Drain program
	Acknowledgment	Acknowledge the message by pressing the Enter button on the touch screen. The machine remains in the current mode.
	Possible Problems	1. Check high limit. 2. Check booster thermistor for proper response in service diagnostics menu - check for damage and tightness. 3. Check booster heater, wiring and contactor. 4. Check incoming water temperature. 5. Ensure thermal paste between thermistor and booster.
	Tech Tips	1. Use service diagnostics menu to verify water levels, heater energizing, temperature response, thermistors, high limits, fill rates. 2. If water is getting into connector, add dielectric grease to area to protect.
006	**Message in Display**	**Sump thermistor Error. Drain Machine, Call Service.**
	Software	• The temperature at the temperature sensor tank QTM1 (AI2) is ≥ 239°F. • Short circuit in the sensor QTM1 (AI2).
	Machine States	Fill program/ Ready / Wash program
	Start Key / Beeper	Permanent red light when machine "ON" / One-time actuation of 5 s.
	Machine Reaction	Machine is switched off; Display remains switched on.
	Locked Programs	Fill program / Wash program / Ready
	Enabled Programs	Drain program / Power Down
	Acknowledgment	Acknowledge the message by pressing the Enter button on the touch screen if the temperature at QTM1 (AI2) is <239°F. The machine remains in the current running mode.
	Possible Problems	1. Check tank thermistor. 2. Check connections and wiring back to board. 3. Check for leaks onto wiring and connectors.
	Tech Tips	1. Monitor in Analog Inputs display mode while troubleshooting - actual value is shown while unit is in operation. Refer to the Programming section for accessing the Analogue Inputs display mode in the Parameters menu. 2. Unplugging thermistor should result in Error 007. 3. If water is getting into connector, add dielectric grease to area to protect.

Error Number	Message in Display	Description
007	**Message in Display**	**Sump thermistor Error. Drain Machine, Call Service.**
	Software	• The temperature at the temperature sensor tank QTM1 (AI2) is ≤ 32°F. • Wire break (open circuit) of the sensor QTM1 (AI2).
	Machine States	Fill program / Ready / Wash program
	Start Key / Beeper	Permanent red light when machine "ON" / One-time actuation of 5 s.
	Machine Reaction	Machine is switched off; Display remains switched on.
	Locked Programs	Fill program / Wash program / Ready
	Enabled Programs	Drain program / Power Down
	Acknowledgment	Acknowledge the message by pressing the Enter button on the touch screen if the temperature at QTM1 (AI2) is >32°F. The machine remains in the current running mode.
	Possible Problems	1. Check tank thermistor. 2. Check connections and wiring back to board. 3. Check for leaks onto wiring and connectors.
	Tech Tips	1. Monitor in Analog Inputs display mode while troubleshooting - actual value is shown while unit is in operation. Refer to the Programming section for accessing the Analogue Inputs display mode in the Parameters menu. 2. Unplugging thermistor should result in Error 007. 3. If water is getting into connector, add dielectric grease to area to protect.
008	**Message in Display**	**Wash tank temperature not reached during fill cycle.**
	Software	During the Fill program, the set-point temperature at the wash tank temperature sensor QTM1 (AI2) was not reached within the time out setting.
	Machine States	Fill program
	Start Key / Beeper	Green - red alternating flashing if machine is ready for operation/ control twice briefly on off (1 second after program end).
	Machine Reaction	Fill program is aborted. The machine goes into stand-by mode.
	Locked Programs	Wash program
	Enabled Programs	Fill program / Drain program
	Acknowledgment	Acknowledge the message by pressing the Enter button on the touch screen. The machine remains in the current mode.
	Possible Problems	1. Check High limit. 2. Check tank thermistor for proper response in service diagnostics menu - check for damage and tightness. 3. Check wash tank heater, wiring and contactor. 4. Ensure thermal paste between thermistor and tank.
	Tech Tips	Use service diagnostics to verify water levels, heater energizing, temperature response, thermistors, high limits, fill rates.

Error Number	Message in Display	Description
014	**Message in Display**	**Booster Pressure Error, Drain Machine, Call Service.**
	Software	• The voltage at the booster pressure sensor PRS2 (AI3) is ≥ 4.5V. • Short circuit at the booster pressure sensor PRS2 (AI3).
	Machine States	Fill program/ Ready / Wash program
	Start Key / Beeper	Permanent red light when machine "ON". / One-time actuation of 5 s.
	Machine Reaction	Machine is switched off; Display remains switched on.
	Locked Programs	Fill program / Wash program
	Enabled Programs	Drain program / switching off via Off-button
	Acknowledgment	Acknowledge the message by pressing the Enter button on the touch screen. If the voltage value on PRS2 (AI3) is ≥ 4.5V, no arrow will appear. If it is in the normal range.
	Possible Problems	1. Damaged, pinched or corroded wire for sensor. 2. Tubing leak, kink or tubing full of water. 3. Check booster vent for blockage. 4. If booster spikes when wash pump runs, check rinse connection in wash tube for proper seating. 5. Faulty sensor.
	Tech Tips	1. Reseat connector. 2. Monitor service diagnostics screen for real time values as you troubleshoot. 3. Swap booster and sump sensor wires to see if the failure is resolved or follows the wiring, sensor or tubing. 4. Never remove or reconnect tubing connection with water in the tank.
015	**Message in Display**	**Booster Pressure Error, Drain Machine, Call Service.**
	Software	• The voltage at the booster pressure sensor PRS2 (AI3) is ≤ 0.30 V. • Wire interruption (open circuit) at the booster pressure sensor PRS2 (AI3).
	Machine States	Fill program/ Ready / Wash program
	Start Key / Beeper	Permanent red light when machine "ON". / One-time actuation of 5 s.
	Machine Reaction	Machine is switched off; Display remains switched on.
	Locked Programs	Fill program / Wash program
	Enabled Programs	Drain program / switching off by means of Off button.
	Acknowledgment	Acknowledge the message by pressing the Enter button on the touch screen.if the voltage value at the PRS2 (AI3) is >0.3V. The machine remains in the current running mode.
	Possible Problems	1. Damaged, pinched or corroded sensor wire. 2. Tubing leak, kink or tubing full of water. 3. Check booster vent for blockage. 4. Faulty sensor. 5. Loose connections.
	Tech Tips	1. Re-seat pressure sensor connector. 2. Monitor service diagnostics screen for real time values as you troubleshoot. 3. Swap booster and sump sensor wires to see if the failure is resolved or follows the wiring, sensor or tubing. 4. Never remove or reconnect tubing connection with water in the tank.

Error Number	Message in Display	Description
016	**Message in Display**	**Wash Tank Pressure Error, Drain Machine, Call Servicee.**
	Software	• The voltage at the wash tank pressure sensor PRS1 (AI4) is ≥ 4.5V. • hort circuit at wash tank pressure sensor PRS1 (AI4).
	Machine States	Fill program/ Ready / Wash program
	Start Key / Beeper	Permanent red light when machine "ON". / One-time actuation of 5 s.
	Machine Reaction	Machine is switched off; Display remains switched on.
	Locked Programs	Fill program / Wash program
	Enabled Programs	Drain program / switching off via Off-button
	Acknowledgment	Acknowledge the message by pressing the Enter button on the touch screen.if the voltage value at the PRS1 (AI4) is <4.5V.The machine remains in the current running mode.
	Possible Problems	1. Damaged, pinched or corroded sensor wire. 2. Tubing leak, kink or tubing full of water. 3. Faulty sensor. 4. Loose connections.
	Tech Tips	1. Reseat pressure sensor connector. 2. Monitor service diagnostics screen for real time values as you troubleshoot. 3. Swap booster and sump sensor wires to see if the failure is resolved or follows the wiring, sensor or tubing. 4. Never remove or reconnect tubing connection with water in the reservoir.
017	**Message in Display**	**Wash Tank Pressure Error, Drain Machine, Call Service.**
	Software	• The voltage on the wash tank pressure sensor PRS1 (AI4) is ≤ 0.30 V. • Wire interruption on the pressure sensor PRS1 (AI4).
	Machine States	Fill program / Ready / Wash program
	Start Key / Beeper	Permanent red light when machine "ON". / One-time actuation of 5 s.
	Machine Reaction	Machine is switched off; Display remains switched on.
	Locked Programs	Fill program / Wash program
	Enabled Programs	Drain program / switching off by means of Off button.
	Acknowledgment	Acknowledge the message by pressing the Enter button on the touch screen if the voltage value at PRS1 (AI4) is >0.3V. The machine remains in the current running mode.
	Possible Problems	1. Damaged, pinched or corroded wire for sensor. 2. Tubing leak, kink or tubing full water. 3. Faulty sensor. 4. Loose connections.
	Tech Tips	1. Re-seat pressure sensor connector. 2. Monitor service diagnostics screen for real time values as you troubleshoot. 3. Swap booster and sump sensor wires to see if the failure is resolved or follows the wiring, sensor or tubing. 4. Never remove or reconnect tubing connection with water in the reservoir.

Error Number	Message in Display	Description
018 (Firmware version 003.0107.000 and earlier)	**Message in Display**	**Wash tank water level is too high. Machine draining.**
	Software	The voltage on the pressure sensor tank PRS1 (AI4) is ≥ 2.3V.
	Machine States	Machine off / Fill program / Ready / Wash program
	Start Key / Beeper	Green - red alternating flashing when machine OFF / activate twice briefly on and off (1 sec after end of program).
	Machine Reaction	1. Machine automatically attempts to drain the extra water. 2. The drain pump MTR3 (DO6) is switched on until the voltage at PRS1 (AI4) is ≤ 1.9V. 3. If machine drains to the appropriate level (1.9V), the screen will display the ENTER button. 4. After hitting ENTER, the display will remove the error and power off the machine. Press power button to resume.
	Locked Programs	Fill program / Wash program / switching off via the Off button
	Enabled Programs	Drain program
	Acknowledgment	• Acknowledge the message by pressing the Enter button on the touch screen if the voltage value at PRS1 (AI4) is <=1.9V. • Start of a drain program; The machine remains in the current running mode.
	Possible Problems	1. Excessive water from outside source (sprayer, tabling water flow, upside down tub, detergent feeder, etc.). 2. Drain pump malfunction. Refer to Service Programming diagnostic menu to toggle the drain pump output and check operation. 3. Drain anti-siphon malfunction (clear device of debris). 4. Drain hose kinked or drain needs cleared. 5. Fill valve malfunction / stuck on.
	Tech Tips	1. Verify water level is above the strainer. 2. Check drain pump and drain hose for debris/kinking. 3. If the water is not drained in approximately 2 minutes, error 52 (drain hose is clogged) will appear. There is no enter button to clear the error because the issue is not fixed. If you hold the power button for 5 seconds the machine will attempt to drain. If the machine still does not drain, you will get error 21 and 18 repeatedly. The machine will not run until these issues are resolved.
018 (Firmware version 003.0201.000 and newer)	**Message in Display**	**Wash tank water level is too high. Machine draining.**
	Software	The voltage on the pressure sensor tank PRS1 (AI4) is ≥ 2.3V for more than 120 seconds.
	Machine States	Initial startup / Machine off / Stand-by / Fill program / Ready / Wash program
	Start Key / Beeper	Permanent red light when machine “ON”. / One time actuation of 5 s.
	Machine Reaction	1. Machine automatically attempts to drain the extra water. 2. The drain pump MTR3 (DO6) is switched on until the voltage at PRS1 (AI4) is ≤ 1.9V. 3. If the machine drains to the appropriate level (1.9V) within 120 seconds, the error will not appear on the screen. 4. If the machine fails to drain to the appropriate level (1.9V) within 120 seconds, then the error will appear 5. The ENTER button will appear once the water level is lowered to the appropriate level (1.9V).
	Locked Programs	Fill program / Wash program / switching off via the Off button
	Enabled Programs	Drain program
	Acknowledgment	• Acknowledge the message by pressing the Enter button on the touch screen if the voltage value at PRS1 (AI4) is ≤1.9V. • Start of a drain program; The machine remains in the current running mode.
	Possible Problems	1. Excessive water from outside source (sprayer, tabling water flow, upside down tub, detergent feeder, etc.). 2. Drain pump malfunction. Refer to Service Programming diagnostic menu to toggle the drain pump output and check operation. 3. Drain anti-siphon malfunction (clear device of debris). 4. Drain hose kinked or drain needs cleared.
	Tech Tips	1. Verify water level is above the strainer. 2. Check drain pump and drain hose for debris/kinking.

Error Number	Message in Display	Description
020	**Message in Display**	**Rinse System Error, Check and Clean Rinse Arms.**
	Software	The wash tank water level did not increase enough while the rinse pump was on during the fill.
	Machine States	Fill program
	Start Key / Beeper	Permanent red light when machine "ON". / One-time actuation of 5 s.
	Machine Reaction	Machine is switched off; Display remains switched on.
	Locked Programs	Fill program / Wash program
	Enabled Programs	Drain program
	Acknowledgment	Acknowledge the message by pressing the Enter button on the touch screen, the drain program will start.
	Possible Problems	1. Check if rinse arm clogged. 2. Check rinse pump (Check capacitor, Check resistance). 3. Check booster for excessive limescale.
	Tech Tips	1. Remove rinse arm to determine if it fills better. 2. Actuate rinse pump in service diagnostics to see if booster level drops - troubleshoot. 3. Inspect both rinse arms, booster, tee and all rinse system for clogging. 4. There is likely NO FAULT with pressure sensor.
021	**Message in Display**	**Drain hose is clogged. Clean drain hose and drain machine again.**
	Software	At the end of the drain program, the voltage at the pressure sensor tank PRS1 (AI4) is ≥ A93 (0.58V).
	Machine States	Drain program
	Start Key / Beeper	Green - red alternating flashing when machine OFF / activate twice briefly on and off (1 sec after end of program).
	Machine Reaction	Machine is switched off, (off mode) display remains switched on.
	Locked Programs	Fill program / Wash program
	Enabled Programs	Drain program
	Acknowledgment	• The customer can not hit enter to clear the error or run the machine until the water is drained from the sump. • Once the water is drained, the enter button appears. The customer can hit enter to clear the error and the display will go blank. They can then hit power and begin filling the machine.
	Possible Problems	1. Drain hose is clogged. 2. Drain hose is kinked. 3. Drain strainer (drain body and standpipe) is clogged. 4. Drain pump malfunction. 5. Drain anti-siphon clogged (clear debris).
	Tech Tips	Ensure power to the machine is off and wash water has cooled. Verify standpipe and bottom of wash tank are free of debris. Clean the drain hose and drain the machine. Ensure drain hose is not kinked and installed properly. If error remains on screen, press and hold power button for 5 seconds to clear the error. Machine will drain and power down.

Error Number	Message in Display	Description
022	**Message in Display**	**Drain System Error during Wash Program.**
	Software	In the Wash program, the specified voltage value A84 (1.82V) at the pressure sensor tank PRS1 (AI4) is not reached within 5 minutes during the intermediate drain - activation of the drain pump MTR3.
	Machine States	Wash program
	Start Key / Beeper	Green - red alternating flashing if machine is ready for operation/ control twice briefly on off (1 second after program end).
	Machine Reaction	Machine is switched off; Display remains switched on.
	Locked Programs	Fill program / Wash program
	Enabled Programs	Drain program
	Acknowledgment	Acknowledge the message by pressing the Enter button on the touch screen. The machine remains in the current running mode.
	Possible Problems	1. Drain hose is clogged. 2. Drain hose is kinked. 3. Drain strainer (drain body and standpipe) is clogged. 4. Drain pump malfunction. 5. Drain anti-siphon clogged (clear debris).
	Tech Tips	Ensure power to the machine is off and wash water has cooled. Verify standpipe and bottom of wash tank are free of debris. Clean the drain hose and drain the machine. Ensure drain hose is not kinked and installed properly. If error remains on screen, press and hold power button for 5 seconds to clear the error. Machine will drain and power down.
023	**Message in Display**	**Rapid Fill Timeout, Inspect Incoming Water Line.**
	Software	THIS ERROR ONLY APPLIES TO UNITS WITH RAPID FILLS KITS PROPERLY INSTALLED. During the fill, the tank water level did not increase by 0.1V within 150 seconds.
	Machine States	Fill program
	Start Key / Beeper	Permanent red light when machine "ON". / One-time actuation of 5 s.
	Machine Reaction	Filling valve SOL2 (DO14) remains actuated.
	Locked Programs	- - -
	Enabled Programs	No restrictions
	Acknowledgment	Press the Enter button on the touchscreen and the screen will turn off. Power the machine back on and attempt to fill again.
	Possible Problems	THIS ERROR ONLY APPLIES TO UNITS WITH RAPID FILLS KITS PROPERLY INSTALLED. 1. Ensure incoming water supply is turned on and that the hose is not kinked. Verify water pressure is 15-65 psi. Press the ENTER button to clear the error. 2. Separate water valve for rapid fill or wiring is faulty. 3. Check parameters are correct for machine configuration (Rapid fill turned on and kit installed). 4. If rapid fill is ON and no kit installed, this error will appear and it not valid. Rapid fill should be turned off in the manager/ service mode. (non-warranty).
	Tech Tips	Ensure incoming water supply is turned on and that the hose is not kinked. Verify water pressure is 15-65 psi. Press the ENTER button to clear the error.

Error Number	Message in Display	Description
029	**Message in Display**	**Program interrupted. Close door.**
	Software	Interruption of a running program by opening the door LS1 door switch.
	Machine States	Wash program
	Start Key / Beeper	Green - red alternating flashing in the Wash program / activate twice briefly on off (1 sec after program end).
	Machine Reaction	Wash is paused.
	Locked Programs	—
	Enabled Programs	No restrictions
	Acknowledgment	Close the door to clear the error.
	Related Parameters	**Input door switch LS1 (DI1).**
	Possible Problems	1. Check the door switch. 2. Check the magnet position. 3. Ensure door spring is not too tight, causing door to open slightly during cycle.
	Tech Tips	1. Touchscreen power/drain will not respond if door is open or door switch is open, door switch must be closed. 2. If water is getting into connector, add dielectric grease to area to protect.
032	**Message in Display**	**Fill error, inspect incoming water line.**
	Software	During the fill, the booster water level did not increase by 0.05V within 240 seconds.
	Machine States	Fill program/ Ready / Wash program
	Start Key / Beeper	Permanent red light when machine "ON". / One-time actuation of 5 s.
	Machine Reaction	Filling valve SOL1 (DO5) remains actuated.
	Locked Programs	- - -
	Enabled Programs	No restrictions
	Acknowledgment	Pressing the Enter button on the touch screen acknowledges the message; The machine remains in the current running mode.
	Possible Problems	1. Check incoming water supply 15-65 psi flowing is recommended. 2. Check hose for kink/clog. 3. Inspect the valve, wiring (verify voltage at valve) and inlet screen. 4. Check for debris in water inlet break (air gap).
	Tech Tips	1. The 240 seconds begins when the fill valve turns on. 2. If a clog in the water break is suspected, replacing outlet hose with spare hose and running to drain is a good way to test if the valve is flowing. 3. Old PRVs or hose vacuum breakers have been known to cause this error, remove from system if suspect.

Error Number	Message in Display	Description
033	**Message in Display**	**Booster Fill Error, Check Incoming Water Line and Shut Off Valve.**
	Software	Booster did not reach .95V set point within 420 seconds.
	Machine States	Fill program / Ready / Wash program
	Start Key / Beeper	Permanent red light when machine "ON". / One-time actuation of 5 s.
	Machine Reaction	Machine is switched off; Display remains switched on.
	Locked Programs	Fill program / Wash program
	Enabled Programs	Drain program
	Acknowledgment	Acknowledge the message by pressing the Enter button on the touch screen. The machine remains in the current running mode.
	Possible Problems	1. Check incoming water supply 15-65 psi flowing is recommended. 2. Check hose for kink/clog. 3. Inspect the valve, wiring (verify voltage at valve) and inlet screen. 4. Check for debris in water inlet break (air gap).
	Tech Tips	1. The 240 seconds begins when the fill valve turns on. 2. If a clog in the water break is suspected, replacing outlet hose with spare hose and running to drain is a good way to test if the valve is flowing. 3. Old PRVs or hose vacuum breakers have been known to cause this error, remove from system if suspect.
035	**Message in Display**	**Ensure tank strainer is locked in place.**
	Software	The strainer basket is not being sensed.
	Machine States	Fill program / Ready / Wash program / Drain program
	Start Key / Beeper	Permanent red light when machine "ON". / One-time actuation of 5 s.
	Machine Reaction	A Filling, Drain, Wash program is aborted. The display remains switched on. An entry in the fault memory is made only if: • When the door is closed, switch LS2 (DI3) is 0 for ≥ 5 seconds and a filling, drain, Wash program is active.
	Locked Programs	Fill program / Wash program / Drain program
	Enabled Programs	Switch off via the OFF button.
	Acknowledgment	Strainer switch S3 input DI3 = 1 for ≥1 seconds. S68 = 0 will bypass this function. • When the strainer is locked into place the error will clear. There is no enter button for this error. Message clears when the strainer is sensed.
	Possible Problems	1. Reed sensor LS2 (DI3) damaged or wiring. 2. Magnet on strainer damaged. 3. Strainer bent or misaligned.
	Tech Tips	Can be enable or disabled in the manager menu.

Error Number	Message in Display	Description
038	**Message in Display**	**Incoming power to machine is too high. Machine has powered down.**
	Software	Incoming power too high (greater than 280V).
	Machine States	Initial startup, machine off, stand-by, Fill program, ready for use, Wash program, Drain program.
	Start Key / Beeper	- - -
	Machine Reaction	Machine is switched off.
	Locked Programs	Everything
	Enabled Programs	- - -
	Acknowledgment	Mains off.
	Possible Problems	The incoming voltage must be at or below the required machine voltage (see machine data plate). Turn circuit breaker supply off and ensure unit is connected with proper voltage supply.
039	**Message in Display**	**Fill cycle interrupted. Close door.**
	Software	The door is open, or something is wrong with the reed switch (LS1).
	Machine States	Fill program
	Start Key / Beeper	Green - red alternating flashing in Fill program / control twice briefly on off (1 second after program end).
	Machine Reaction	The Fill program is interrupted as long as the door is open.
	Locked Programs	- - -
	Enabled Programs	No restrictions.
	Acknowledgment	Close door switch LS1 (DI1). The Fill program is afterwards continued.
	Possible Problems	1. Door switch or magnet damaged. 2. Door switch wire or connector damaged / corroded. 3. Door spring out of adjustment.
	Tech Tips	1. Touchscreen power/drain will not respond if door is open or door switch is open, door switch must be closed. 2. If water is getting into connector, add dielectric grease to area to protect.
049	**Message in Display**	**Communication between the controls has been interrupted.**
	Software	Interruption of communication between HMI and the CU board.
	Machine States	Initial startup, machine off, Fill program, Ready, Wash program, Drain program.
	Start Key / Beeper	Permanent red light when machine "ON". / One-time actuation of 5 s.
	Machine Reaction	Machine is switched off; Display remains switched on; Outputs are switched off immediately.
	Locked Programs	- - -
	Enabled Programs	No restrictions
	Acknowledgment	Communication between control panel and control has been restored Machine remains in current running mode.
	Possible Problems	1. Check connection - cable and pin connectors between controls and HMI. 2. Check MODBUS and connections.
	Tech Tips	The error will not clear until the problem is fixed.

Error Number	Message in Display	Description
052	**Message in Display**	**Drain System Error. Check Drain Pump and Hose.**
	Software	The wash tank water level was too high. Machine attempted to drain to 1.9V for 120 seconds.
	Machine States	Initial startup, machine off, stand-by, Fill program, Ready, Wash program.
	Start Key / Beeper	Permanent red light when machine "ON". / One-time actuation of 5 s.
	Machine Reaction	1. Machine is switched off. 2. The display remains ON (also after the shutdown time T112). 3. The drain pump MTR3 (D06) is switched on until the voltage at the pressure sensor tank is PRS1 (AI4) <= A91 (<=1.9V).
	Locked Programs	Fill program / Wash program / switching off via the off-button.
	Enabled Programs	Drain program
	Acknowledgment	1. Pressing the Enter button on the touch screen acknowledges the message if the voltage value at the pressure sensor tank PRS1 (AI4) is ≤ A91 (≤ 1.9V). 2. Start of a drain program; Machine remains in current running mode.
	Possible Problems	1. Check drain hose for kink/clog. 2. Check drain pump. 3. Check drain anti-siphon for clogging (clean out). 4. Check tank pressure sensor/harness for proper response to water level.
	Tech Tips	1. The 120 seconds starts when the drain pump turns on. 2. Check tank pressure sensor - Level matches water level in tank.
054	**Message in Display**	**ASR strainer basket not detected. Place ASR strainer basket in ASR box.**
	Software	ASR Strainer basket is missing or is not being sensed.
	Machine States	Wash program
	Start Key / Beeper	- - -
	Machine Reaction	Machine will function, ASR will not run until resolved.
	Locked Programs	ASR function
	Acknowledgment	Pressing the Enter button on the touch screen acknowledges the message and cycles will continue, without ASR function. ASR function will return once strainer is replaced and working.
	Possible Problems	1. Check magnet in strainer basket. 2. Check reed switch and wiring harness LS3 (DI13).
057	**Fault Description**	**Wash tank is filling. Cycle will begin when water is replenished.**
	Software	The wash tank water level went below 1.6V.
	Machine States	Wash Program (start)
	Start Key / Beeper	The start button is blue during this time (Wash program active).
	Machine Reaction	The Wash program is stopped. It is followed by a Fill program. When the water level in the wash tank PRS1 (AI4) >1.9V, the filling process is terminated and the Wash program is resumed.
	Locked Programs	Switching off via the OFF button. Start of a filling or Drain program.
	Enabled Programs	Water level wash tank too low. Adjustment running.
	Acknowledgment	By machine OFF or when water level >A78 is reached.
	Possible Problems	1. Check drain anti-siphon for clogging. 2. If the error persists, check incoming waterline and fill valve. 3. Check Rinse Arms for scale build up and rinse pump. 4. Check Strainer for clogging or scaling.
	Tech Tips	1. Possible that upside down containers are collecting water and keeping it from getting to the sump. 2. When this error appears the machine will attempt to refill the water automatically.

Error Number	Message in Display	Description
075	**Message in Display**	**Rinse aid empty. Refill Rinse Aid.**
	Software	Rinse aid is not being sensed.
	Machine States	Wash program
	Start Key / Beeper	Blinking red light
	Machine Reaction	Display error message.
	Locked Programs	None
	Enabled Programs	All
	Acknowledgment	Pressing the Enter button on the touch screen acknowledges the message and will attempt to reprime the pumps to the sensor.
	Possible Problems	1. Chemical bottle empty or standpipe not in the bottle correctly. 2. Chemical squeeze tube worn. 3. Chemical adapter clamp loose (must be snapped tightly - zip ties and slip joints are unreliable). 4. Chemical delivery tube damaged. 5. Chemical screen on bottom standpipe clogged or ball valve defective. 6. Chemical pump wire loose or motor not turning. 7. Roller assembly bracket/worn or lack of lubrication. 8. Chemical adapter cap damaged (non-warranty). 9. Check sensor for leaks/function - adjust sensor threshold if needed.
	Tech Tips	1. Clamps must be snapped tightly - zip ties and slip joints are unreliable, air entering and bubbles can help identify leakage areas. 2. Pinch tubing is a wear/PM part, should be replaced regularly, if replacing one tube, replace all tubes. (PM not warranty) 3. Pumped rinse machines have rinse aid dispensed into booster, so the pump runs during the wash cycle and not during the rinse.
077	**Fault Description**	**Detergent empty. Machine locked.**
	Software	The machine did not sense detergent for 3 consecutive cycles.
	Machine States	Wash program
	Start Key / Beeper	Blinking red light
	Machine Reaction	Machine is locked until detergent is replenished and confirmed.
	Locked Programs	Wash program
	Enabled Programs	Drain program
	Acknowledgment	Pressing the Enter button on the touch screen acknowledges the message and will attempt to reprime the pumps to the sensor.
	Possible Problems	1. Chemical bottle empty or standpipe not in the bottle correctly. 2. Chemical squeeze tube worn. 3. Chemical adapter clamp loose (must be snapped tightly - zip ties and slip joints are unreliable). 4. Chemical delivery tube damaged. 5. Chemical screen on bottom standpipe clogged or ball valve defective. 6. Chemical pump wire loose or motor not turning. 7. Roller assembly bracket/worn or lack of lubrication. 8. Chemical adapter cap damaged (non-warranty). 9. Check sensor for leaks/function - adjust sensor threshold if needed.
	Tech Tips	1. Clamps must be snapped tightly - zip ties and slip joints are unreliable, air entering and bubbles can help identify leakage areas. 2. Pinch tubing is a wear/PM part, should be replaced regularly, if replacing one tube, replace all tubes. (PM not warranty).

Error Number	Message in Display	Description
079	**Message in Display**	**Sanitizer empty. Machine locked.**
	Software	The machine did not sense sanitizer for 3 consecutive cycles.
	Machine States	Wash program
	Start Key / Beeper	Blinking red light
	Machine Reaction	Machine is locked until sanitizer is replenished and confirmed.
	Locked Programs	Wash program
	Enabled Programs	Drain program
	Acknowledgment	Pressing the Enter button on the touch screen acknowledges the message and will attempt to reprime the pumps to the sensor.
	Possible Problems	1. Chemical bottle empty or sanitizer cap broken (Hobart replacement 00-562963 for Ecolab screw on cap, non- warranty). 2. Chemical squeeze tube worn. 3. Chemical adapter clamp loose (must be snapped tightly - zip ties and slip joints are unreliable). 4. Chemical delivery tube damaged. 5. Chemical screen on bottom standpipe clogged or ball valve defective. 6. Chemical pump wire loose or motor not turning. 7. Roller assembly bracket/worn or lack of lubrication. 8. Chemical adapter cap damaged (non-warranty). 9. Check sensor for leaks / function - adjust sensor threshold if needed.
	Tech Tips	1. Clamps must be snapped tightly - zip ties and slip joints are unreliable, air entering and bubbles can help identify leakage areas. 2. Pinch tubing is a wear / PM part, should be replaced regularly, if replacing one tube, replace all tubes. (PM not warranty).
081	**Message in Display**	**Final Rinse Thermistor Error.**
	Software	• Final rinse temperature QTM3 (AI10) >239° F • Short circuit of the sensor QTM3.
	Machine States	Fill program / Ready / Wash program
	Start Key / Beeper	Permanent red light when machine "ON" / One-time actuation of 5 s.
	Machine Reaction	Machine is switched off; Display remains switched on.
	Locked Programs	Fill program / Wash program
	Enabled Programs	Drain program / Power Down
	Acknowledgment	Pressing the Enter button on the touch screen acknowledges the message. If the temperature at QTM3 (AI10) is <239°F, the machine remains in the current running mode.
	Possible Problems	1. Check final rinse thermistor. 2. Check connections and wiring back to board. 3. Check for leaks onto wiring and connectors.
	Tech Tips	1. Monitor in Analog Inputs display mode while troubleshooting - actual value is shown while unit is in operation. Refer to the Programming section for accessing the Analogue Inputs display mode in the Parameters menu. 2. Unplugging thermistor should result in Error 082. 3. If water is getting into connector, add dielectric grease to area to protect.

Error Number	Message in Display	Description
082	**Message in Display**	**Final Rinse Thermistor Error.**
	Software	• Final rinse temperature QTM3 (AI10) is ≤ 32°F. • Wire break (open circuit) of the sensor QTM3 (AI10).
	Machine States	Fill program / Ready / Wash program
	Start Key / Beeper	Permanent red light when machine "ON". / One-time actuation of 5 s.
	Machine Reaction	Machine is switched off; Display remains switched on.
	Locked Programs	Fill program / Wash program
	Enabled Programs	Drain program / Power Down
	Acknowledgment	Pressing the Enter button on the touch screen acknowledges the message. If the temperature on QTM3 (AI10) is >32°F, the machine remains in the current running mode.
	Possible Problems	1. Check final rinse thermistor. 2. Check connections and wiring back to board. 3. Check for leaks onto wiring and connectors.
	Tech Tips	1. Monitor in Analog Inputs display mode while troubleshooting - actual value is shown while unit is in operation. Refer to the Programming section for accessing the Analogue Inputs display mode in the Parameters menu. 2. Unplugging thermistor should result in Error 082. 3. If water is getting into connector, add dielectric grease to area to protect.
084	**Message in Display**	**Minimum final rinse temperature not reached. Machine locked.**
	Software	**THIS IS FOR SCB MACHINES ONLY.** The minimum final rinse temperature (120 °F) was not reached within 3 cycles.
	Machine States	Wash program
	Start Key / Beeper	Red blinking LED
	Machine Reaction	Display error message and lock wash program.
	Locked Programs	Wash program
	Enabled Programs	Drain program / Power Down
	Acknowledgment	Press and hold the power button for 5 seconds to clear the error. The machine will drain and power off. Power back on and try again.
	Possible Problems	1. Check High limit. 2. Check booster thermistor for damage and tightness. 3. Check booster heater, wiring and contactor. 4. Check incoming water temperature. 5. Ensure thermal paste between thermistor and booster. 6. Verify water is flowing through rinse arms into machine. Arms and nozzles should be clean and free of lime scale. 7. Check for loose or damaged wires. 8. Check for slow fill into booster, low pressure or restricted flow from clogged fill or valve strainer. Remove pressure regulator if under 65 psi and any in-line backflow preventer.
	Tech Tips	If water is getting into connector, add dielectric grease to area to protect.

Error Number	Message in Display	Description
085	**Message in Display**	**Wash tank overtemp tripped.**
	Software	Open circuit on wash tank high limit TAS3 (DI21).
	Machine States	All
	Start Key / Beeper	Solid red light
	Machine Reaction	Error state, will not run.
	Locked Programs	All
	Enabled Programs	None
	Acknowledgment	When problem is corrected, pressing the Enter button on the touch screen acknowledges the message and will proceed with cycle.
	Possible Problems	1. Check wash tank heater and reset overtemps. 2. Check contactor. 3. Check contactor wiring. 4. Check for loose wire connection to high limit. 5. Verify tank set points. 6. Ensure thermal paste between thermistor and tank.
086	**Message in Display**	**Booster overtemp tripped.**
	Software	Open circuit on booster tank high limit TAS4 or TAS6 (DI22).
	Machine States	All
	Start Key / Beeper	Solid red light
	Machine Reaction	Error state, will not run.
	Locked Programs	All
	Enabled Programs	None
	Acknowledgment	When problem is corrected, pressing the Enter button on the touch screen acknowledges the message and will proceed with cycle.
	Possible Problems	1. Check booster tank heater and reset overtemps. 2. Check contactor. 3. Check contactor wiring. 4. Check for loose wire connection to high limit. 5. Verify tank set points. 6. Ensure thermal paste between thermistor and booster.
087	**Message in Display**	**Minimum final rinse temperature not reached after repeating cycle.**
	Software	The minimum final rinse temperature (180 °F) was not reached after repeating cycles.
	Machine States	Wash program
	Start Key / Beeper	Red blinking LED
	Machine Reaction	Display error message and lock wash program.
	Locked Programs	Wash program
	Enabled Programs	Drain program / Power Down
	Acknowledgment	Press and hold the power button for 5 seconds to clear the error. The machine will drain and power off. Power back on and try again.
	Possible Problems	1. Check High limit. 2. Check booster and final rinse thermistor for damage and tightness. 3. Check booster heater (amps on each leg), wiring and contactor. 4. Check incoming water temperature. 5. Ensure thermal paste between thermistor and tank. 6. Verify water is flowing through rinse arms into machine. Arms and nozzles should be clean and free of lime scale. 7. Check for loose or damaged wires. 8. Check for slow fill into booster, low pressure or restricted flow from clogged fill or valve strainer. Remove pressure regulator if under 65 psi and any in-line backflow preventer.
	Tech Tips	If water is getting into connectors, add dielectric grease to area to protect.

Error Number	Message in Display	Description
088	**Message in Display**	**Alert: Wash Tank Contactor Fault. Pull Circuit Breaker(s) and Contact Service.**
	Software	Wash tank contactor was stuck when the machine was not calling for heat.
	Machine States	All
	Start Key / Beeper	Red blinking LED
	Machine Reaction	Display error message and automatically add water through the fill valve to prevent overheating, drain pump will activate if necessary.
	Locked Programs	All
	Enabled Programs	Drain program / Power Down
	Acknowledgment	Press and hold the power button for 5 seconds to clear the error. The machine will drain and power off. Power back on and try again.
	Possible Problems	1. Check contactor CON2 (DI12) for proper function (first turn circuit breaker off). 2. Check contactor side switch for proper function. 3. Check contactor side switch and contactor wiring/ connections. 4. Check cable at the J19 connection.
089	**Message in Display**	**Alert: Booster Contactor Fault. Pull Circuit Breaker(s) and Contact Service.**
	Software	Booster contactor stuck.
	Machine States	All
	Start Key / Beeper	Red blinking LED
	Machine Reaction	Display error message and automatically add water through the fill valve to prevent overheating, drain pump will activate if necessary.
	Locked Programs	All
	Enabled Programs	Drain program / Power Down
	Acknowledgment	Press and hold the power button for 5 seconds to clear the error. The machine will drain and power off. Power back on and try again.
	Tech Tips	1. Check contactor CON1 (DI11) for proper function (first turn circuit breaker off). 2. Check contactor side switch for proper function. 3. Check contactor side switch and contactor wiring/ connections. 4. Check cable at the J19 connection.
090	**Message in Display**	**Wash Temperature not reached. Drain and restart Machine. If necessary, contact Service technician.**
	Software	The minimum wash tank temp did not reach 153 °F within 20 minutes.
	Machine States	Wash program
	Start Key / Beeper	Red blinking LED
	Machine Reaction	Display error message and lock wash program.
	Locked Programs	Wash program
	Enabled Programs	Drain program / Power Down
	Acknowledgment	Press and hold the power button for 5 seconds to clear the error. The machine will drain and power off. Power back on and try again.
	Possible Problems	1. Check wash temp thermistor - QTM1 - for damage and tightness. 2. Check tank heater (amps on each leg), wiring and contactor. 3. Check high limits. 4. Look for damaged wires in control box. 5. Check incoming water temperature. 6. Ensure thermal paste between thermistor and tank.
	Tech Tips	1. If water is getting into connector, add dielectric grease to area to protect. 2. The 20 minutes starts when “Heating” appears on the screen.

COMPONENT OPERATING VALUES

Pressure Sensor Values

Pressure Sensor Values			
	Empty	Full	Heat On
Wash Tank	0.500 V	1.90 V	0.72 V
Electric Booster	0.500 V	0.95 V	0.74 V

Thermistor Charts

Tank & Electric Booster Temperature Sensor (Part Number 00-775612-00001)	
Degree (°F)	**Resistance (Ω)**
32°F	36,496
86°F	9,928
104°F	6,749
122°F	4,674
140°F	3,290
158°F	2,366
203°F	1,109

Final Rinse Temperature Probe (Part Number 00-328994)	
Degree (°F)	**Resistance (Ω)**
95°F	63,480
105.8°F	48,905
114.8°F	39,605
125.6°F	30,976
134.6°F	25,390
145.4°F	20,136
156.2°F	16,083
165.2°F	13,405
176.0°F	10,837
185.0°F	9,121
195.8°F	7,456
204.8°F	6,331
212°F	5,569

Tank Heater Values

7.2KW Wash Tank Heater Current Per Heater Element					
Model	**Hobart Part Number**	**Voltage**	**Watts**	**Amps / Element**	**Resistance Ω**
AM16-BAS/AM16T-BAS AM16VL-BAS/AM16VLT-BAS AM16-ASR/AM16T-ASR AM16VL-ADV/AM16VLT-ADV AM16SVL/AM16SVLT	00-562182-00001	240	2,400	10	22.9 - 25.3
		208	1,802	8.7	
	00-562182-00002	480	1,983	4.1	110 - 121.6
		440	1,667	3.8	
	00-562182-00003	415	1,988	4.8	82.1 - 87.6
		380	1,667	4.4	

5.7KW Wash Tank Heater Current Per Heater Element					
Model	**Hobart Part Number**	**Voltage**	**Watts**	**Amps / Element**	**Resistance Ω**
AM16SCB AM16VLSCB AM16VLTSCB	00-562904	240	1,900	7.9	28.6 - 31.6
		208	1,427	6.9	

Booster Heater Values

9.5KW Booster Heater Current Per Heater Element					
Model	**Hobart Part Number**	**Voltage**	**Watts**	**Amps / Element**	**Resistance Ω**
AM16-BAS/AM16T-BAS AM16VL-BAS/AM16VLT-BAS AM16-ASR/AM16T-ASR AM16VL-ADV/AM16VLT-ADV AM16SVL/AM16SVLT	00-562262-00001	240	3,166.7	13.2	17.3 - 19.1
		208	2,377.7	11.4	
	00-562262-00002	480	3,166.7	6.6	69.6 - 77.0
		440	2,661	6	
	00-562262-00003	415	3,166.7	7.6	51.8 - 57.0
		380	2,655	7	

5.7KW Booster Heater Current Per Heater Element					
Model	**Hobart Part Number**	**Voltage**	**Watts**	**Amps / Element**	**Resistance Ω**
AM16SCB AM16VLSCB AM16VLTSCB	00-562905	240	1,900	7.9	28.6 - 31.6
		208	1,427	6.9	

Motor Values

Wash Pump Motor				
Hobart Part Number	**Voltage**	**PH**	**Hz**	**Amps**
00-562075-00002	208-240	1	60	9.6
00-562075-00001	380-480	3	60	2.8

Rinse Pump Motor				
Hobart Part Number	**Voltage**	**PH**	**Hz**	**Amps**
00-942096-00007	240	1	60	0.8

Drain Pump Motor				
Hobart Part Number	**Voltage**	**PH**	**Hz**	**Amps**
00-942096-00004	240	1	60	0.8

ASR Pump Motor				
Hobart Part Number	**Voltage**	**PH**	**Hz**	**Amps**
00-942096-00006	240	1	60	0.8

Fan (Standard Height Models)		
Hobart Part Number	**Voltage**	**Amps**
00-975453	24 VDC	1.0

Fan (Tall Models)		
Hobart Part Number	**Voltage**	**Amps**
00-913102-00507	24 VDC	2.2

PROGRAMMING

Manager Menu

The AM16 dish machines allow customization options for machine operation. To activate or change these features, enter the Manager Menu using the following procedure.

1. Press the POWER button to turn the dishwasher on. Display shows ready screen when fill cycle has completed.
2. Press the MENU button in the upper-right hand corner of the display.
3. With 'Manager Menu' highlighted, press the ENTER button. The 'Enter PIN' screen will be displayed.
4. The default manager code is 1001. Use the ARROW buttons to change the value and then press the ENTER button to select the value and toggle to the next digit until the code is entered.
5. Use the ARROW buttons to toggle through the Manager Menu.
   a. Once the desired selection is highlighted, press the ENTER button.
   b. For selections that are editable, use the ARROW buttons to change the value.
   c. Once the required value is displayed, press the ENTER button to save the selection.
6. To exit the programming, use the ARROW buttons to scroll and highlight 'Back' and then press the ENTER button. Repeat this procedure until the ready screen is displayed.

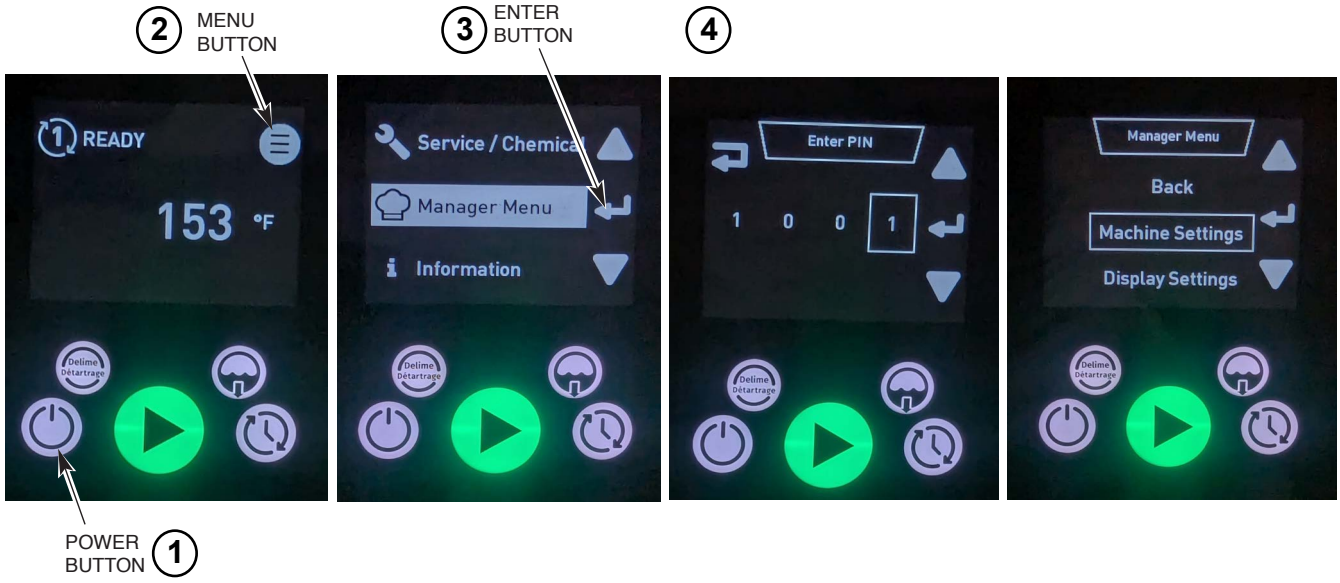

Manager Menu Parameters

NOTE: The internal clock to the dishwasher may have up to 5 minutes per year deviation. Over time, this may affect time-based features such as Automatic Start program. Be sure to double-check the machine clock setting in the Manager Menu when enabling these parameters.

Parameter Name	Description	Possible Values	Default Value
MACHINE SETTINGS			
Language	Sets the language for machine display.	English, French, Spanish, etc.	English
Date	Sets the current day, month, year.		
Time	Selects the current time (hours & minutes). Time can also be updated to 24h format.		
Temperature Units	Sets the temperature displays to Fahrenheit or Celsius.	Fahrenheit or Celsius	Fahrenheit
DISPLAY SETTINGS			
Brightness	Increases or decreases the brightness of the machine display screen.		
MACHINE ALARM			
Machine Alarm	Enables or disables an end of cycle audible alarm.	Enable or Disable	Enable
CHEMICAL MENU			
Rinse Aid Concentration	Sets the rinse aid chemical concentration level.	0.0 ml/L - 2.0 ml/L	1.1 ml/L
Detergent Concentration	Sets the detergent chemical concentration level.	0.0 ml/L - 9.5 ml/L	2.5 ml/L
Prime Chemical Pumps	Refer to Chemical Pump Priming, page 11.		
Sanitizer Dosing	Sets the sanitizer chemical concentration level.	0% - 100%	11%
Delime Concentration	Sets the delime chemical concentration level based on % delimer in solution with sump & booster tank water.	Low (1.25%) Medium (1.89%) High (3.77%)	Low (1.25%)
WATER HARDNESS			
Water Hardness	Sets the water supply water hardness.	0 gr/gal - 250 gr/gal	7 gr/gal
MACHINE CYCLE LOG			
Show Cycle Information	Displays date and time of previous cycles.		

Parameter Name	Description	Possible Values	Default Value
AUTOMATIC START *			
Enable/Disable	Allows the automatic start feature to be disabled or enabled.	Enable or Disable	Disable
Settings	Sets the automatic start day of week and time. If feature is enabled, machine will automatically power on and fill at day and time set.		
WiFi			
Enable/Disable	Enables or disables WiFi connectivity.	Enable or Disable	Disable
Status	Displays the current WiFi connection status of the machine.		
Connection Assistant	Guided connection to WiFi network.	• Search Network • WPS • Add Network	
Access Code	Generates an access code that can be used to pair the machine to the SmartConnect App.		
CYCLES UNTIL DELIME NOTIFICATION (ONLY APPLIES TO AM16(T)-BAS, AM16VL(T)-BAS, AM16SCB & AM16VLSCB MODELS)			
Cycles Until Delime Notification	Displays remaining cycles until delime reminder notification is displayed.		
Set Counter	Sets the number of cycles until the delime reminder notification is displayed.	0-999999	2000
DELAY WASH PROGRAM			
Enable/Disable	Enables or disables wash tank temperature delay. If enabled, wash cycle will be delayed until minimum wash temperature is reached. Display will show 'Heating' until temperature is reached.	Enable or Disable	Disable (Enable for SVLT & SCB models)

*** NOTE:** When enabling Automatic Start feature, the machine will power on and fill while unattended. Prior to using this feature, ensure all machine panels are in place and that all facility connections to the machine (i.e.: water, drain, electric) are in working order.

Parameter Name	Description	Possible Values	Default Value
RINSE TEMPERATURE ALERT			
Disabled	Disables low rinse temperature alert.		
Notification	Enables low rinse temperature alert. After set number of cycles (default 3) below minimum rinse temperature requirement, display will show rinse temperature alert warning. Machine will continue to function as normal.		
Lockout Machine	Enables low rinse temperature lockout. After set number of cycles (default 3) below minimum rinse temperature requirement, display will show rinse temperature alert warning. Machine will lockout and unit will be inoperable.		
Repeat Cycle	After set number of cycles (default 3) below minimum rinse temperature requirement, machine will automatically repeat wash and rinse cycles.		
STRAINER MONITORING			
Strainer Monitoring	Detects if sump strainer is in place through error or warning. If set to Error Message, unit is inoperable until strainer is properly installed. If set to Warning, press Enter to continue with normal machine operation.	Error Message Or Warning	Error Message

Service Menu

Follow the below procedure to access the Service Programming Menu.

NOTE: Altering parameters from machine cofiguration as shipped may cause operation issues. Resetting parameters back to factory default settings is not covered under warranty.

1. Press the POWER button to turn the dishwasher on. Display shows ready screen when fill cycle has completed.
2. Press the MENU button in the upper-right hand corner of the display.
3. With 'Service / Chemical' highlighted, press the ENTER button. The 'Enter PIN' screen will be displayed.
4. The service programming code is 8934. Use the ARROW buttons to change the value and then press the ENTER button to select the value and toggle to the next digit until the code is entered.
5. Once the service code has been entered, Use the ARROW buttons to toggle through the menu and access the below service menus.
6. To exit the programming, use the ARROW buttons to scroll and highlight 'Back' and then press the ENTER button. Repeat this procedure until the ready screen is displayed.

Parameter Name	Description	Possible Values	Default Value
DIAGNOSTICS			
Inputs/Outputs	Shows the values for the Digital Inputs, Analog Inputs and Digital Outputs. Also allows the component outputs to be energized by highlighting the appropriate component and pressing and holding the 0/1 button. The output will be energized until the 0/1 button is released.		
Error Log	Shows all the errors and how many times they have been triggered and when.		
CLEAR ERROR LOG			
Reset Error Log	Clears which errors have been triggered and when.	Yes or No	No

Parameters Menu

To access the Analogue Inputs display mode in the Parameters menu, follow the below steps.

1. Use the arrow buttons to navigate to parameter S51 and press the ENTER button.
2. Press the + button to change the 0 to 1 and press the ENTER button.
3. Highlight Exit Menu and press the ENTER button.
4. To exit the Parameters menu, use the ARROW buttons to scroll and highlight 'Back' and then press the ENTER button. Repeat this procedure until the Analogue Inputs mode is displayed.
5. After troubleshooting, access the Parameters menu and change parameter S51 back to 0.

HMI Firmware Update

AM16 Firmware Download Procedure

1. Scan the below QR code or visit **https://warewash.hobartcorp.com/am16wiringdiagrams** and download the two firmware files (.hob and .bin). **NOTE: When downloading the files, ensure the file names remain the same once downloaded.**

2. On a blank USB drive, load the .bin file onto the main directory.

3. On the same USB drive, create a folder named “04-006025”.

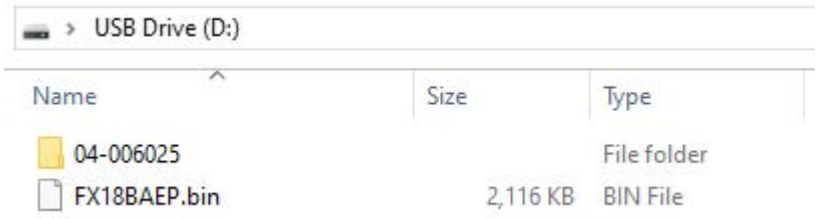

4. Load the firmware (.hob file) in the 04-006025 folder.

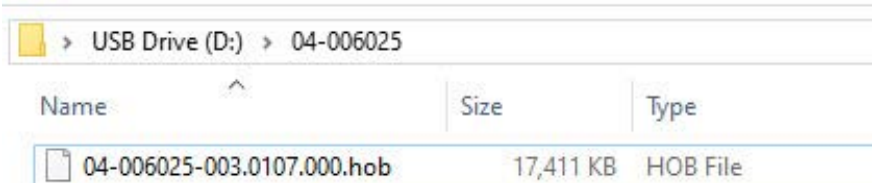

Updating Firmware on HMI

1. For a new HMI, the display prior to loading firmware will default to the below display.



2. Before proceeding, ensure the unit is powered off at the circuit breaker supply.

3. With the unit powered off, remove the right side panel and insert the USB drive, which was previously loaded with the files, into the USB port.

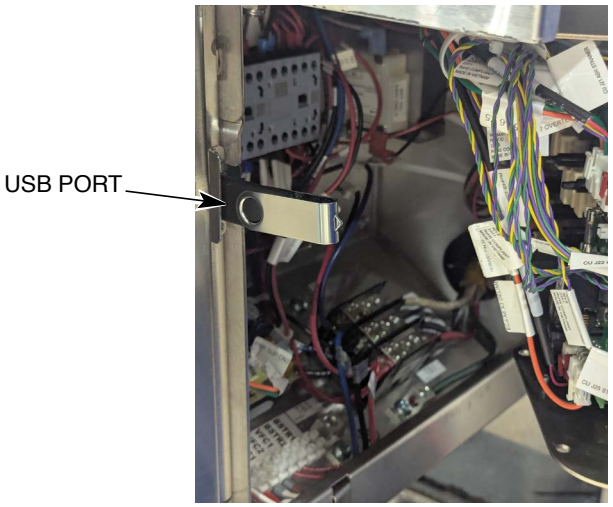

4. Turn the circuit breaker on and press the checkmark when displayed.



5. Press the checkmark to confirm the firmware version.



6. Press the checkmark to initiate the firmware update.

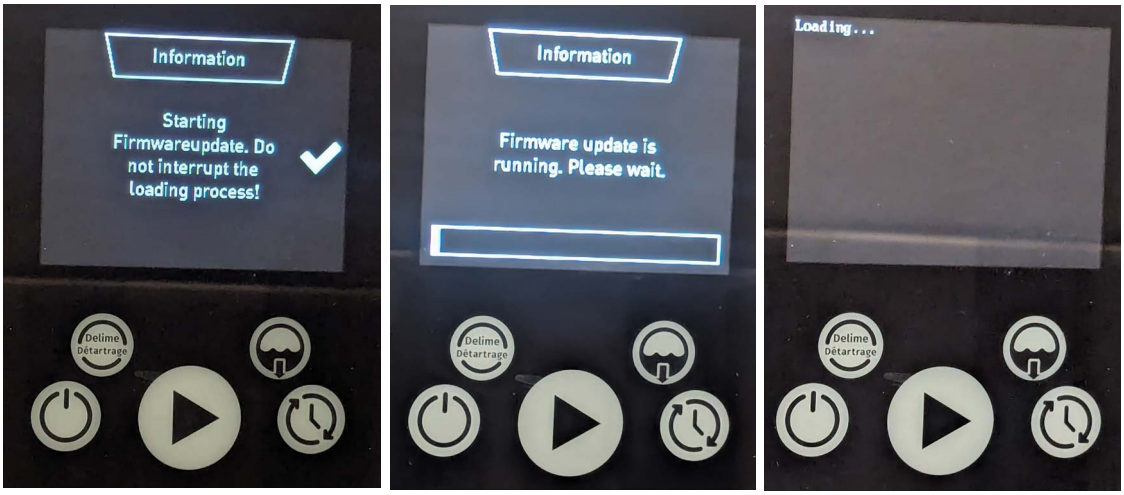

7. Once the firmware update has completed, press the Enter button.



8. Press the down arrow to highlight “Set Machine Type” and press the Enter button.



9. Using the below chart, set the Program Number for the Device Code based on the dish machine configuration. Use the arrow buttons to highlight the appropriate Program Number and press the Enter button.

Program Number	Device Code
102	AM16-BAS-2
104	AM16-BAS-4
106	AM16-BAS-8
110	AM16-BAS-10
102	AM16T-BAS-2
104	AM16T-BAS-4
106	AM16T-BAS-8
110	AM16T-BAS-10
302	AM16VL-BAS-2
304	AM16VL-BAS-4
306	AM16VLT-BAS-2
308	AM16VLT-BAS-4
502	AM16-ASR-2
502	AM16T-ASR-2
200	AM16VL-ADV-2
204	AM16VL-ADV-4
202	AM16VLT-ADV-2
206	AM16VLT-ADV-4
614	AM16SVL-2
601	AM16SVLT-1
602	AM16SVLT-2
603	AM16SVLT-3
604	AM16SCB-12
606	AM16SCB-14
608	AM16SCB-16
608	AM16TSCB-16
610	AM16VLSCB-12
612	AM16VLTSCB-18



10. Once the loading process has completed, press the Enter button.

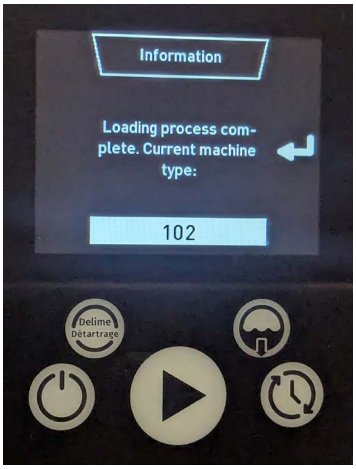

11. Scroll down and highlight “Back” to exit the programming. Repeat this procedure until the display powers off.



12. Press the Power button to turn the unit on.

13. Highlight the appropriate language selection and press the Enter button.



14. Set the current date and press the Enter button.



15. Set the current time and press the Enter button.

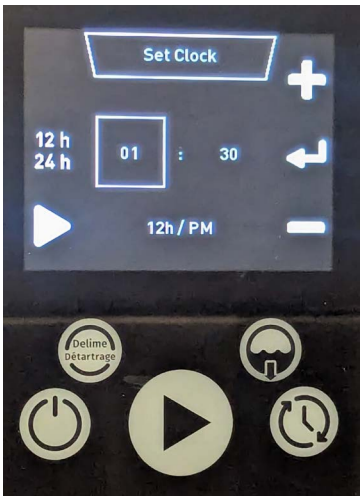

16. Select the water hardness value based on the water supply hardness to the dish machine and press the Enter button (default is 3 grains per gallon).



17. If the door is open, display will prompt to Close Hood. Close the door to proceed..



18. With “Machine On” highlighted, press the Enter button to start the fill process or highlight “Machine Off” and press the Enter button to turn the machine off.



19. Remove the USB drive and replace the right side panel. The machine is now ready for normal operation.

PREVENTATIVE MAINTENANCE CHECKLIST

The following items should be checked on a routine basis to ensure proper dish machine operation and prolong the life of the dish machine and its components. It is recommended that these items be checked every six months or as required based on machine usage.

CONTROL BOX / ELECTRICAL COMPONENTS

- ☐ Check operation of all HMI buttons and functions.
- ☐ Check all reed switches (door, wash tank strainer basket & ASR basket (if equipped)) and test operation. Adjust or replace if faulty.
- ☐ Check for moisture in controls area; dry and repair as needed.
- ☐ Check for tightness on all lead wires, terminal blocks and contactors.

FILL / FINAL RINSE SYSTEM

- ☐ Clean upper and lower final rinse arms and nozzles.
- ☐ Ensure no excessive lime scale build up inside the rinse arms.
- ☐ Ensure condensing coil is free of debris and clean as required (Ventless models only.).
- ☐ Fill machine and check for proper water level. Refer to Component Operating Values (page 60) and check V reading.
- ☐ Check all hoses and piping for leaks.
- ☐ Ensure fill air gap nuts are tight inside wash chamber.
- ☐ Verify final rinse temperature. If incorrect, check the thermistor resistance (see chart below) and replace if required.

Final Rinse Temperature Probe (Part Number 00-328994)	
Degree (°F)	**Resistance (Ω)**
95°F	63,480
105.8°F	48,905
114.8°F	39,605
125.6°F	30,976
134.6°F	25,390
145.4°F	20,136
156.2°F	16,083
165.2°F	13,405
176.0°F	10,837
185.0°F	9,121
195.8°F	7,456
204.8°F	6,331
212°F	5,569

TABLES / DOORS / PANELS

- ☐ Check for leaks at table connections. Reseal as required.
- ☐ Check to ensure unit is level. Adjust as required.
- ☐ Check both side and front panels for damage.
- ☐ Check for proper operation of the door assembly and ensure it closes properly.

DRAIN SYSTEM

- [ ] Drain unit – check for leaks and proper drain pump operation.
- [ ] Clean tank bottom, standpipe and drain hub and check for debris.
- [ ] Clean wash tank air trap port.

WASH TANK SYSTEM

- [ ] Clean upper and lower wash arms.
- [ ] Clean strainer basket and strainer pan.
- [ ] Ensure wash tank heater is clean and free of soil and lime scale build up. If excessive lime scale is present, run delime cycle.
- [ ] Verify wash tank temperature meets the minimum requirement as shown on the data label.

CHEMICAL SYSTEM (MACHINES EQUIPPED WITH HOBART CHEMICAL PUMP SYSTEM)

- [ ] Replace chemical pump squeeze/pinch tubes. Hobart part number 00-949651-00004.
- [ ] Check all connections and fittings for leaks.
- [ ] Check tubing from chemical bottle to machine for kinks, holes and leaks.
- [ ] Ensure standpipe strainers are clean and free of debris.
- [ ] Ensure standpipes are properly inserted into chemical containers.
- [ ] Ensure chemical cap is secured properly and not cracked or broken. Replace as required. Hobart part number 00-562915. (SCB models only).

NOTE: Reassemble any panels / covers or components that were removed.

RECOMMENDED SPARE PARTS

Below is a list of recommended spare parts. For the complete AM16 parts manual, visit **www.hobartparts.com**.

Qty.	Part Number	Description
1	00-975443-00001	HMI (Display)
1	00-975430-00001	Control Board
1	00-975433	Extension Board Assy. (EC A6)
1	00-975431	Extension Board Assy. (EC A7)
1	00-562597-00002	Contactor (20 Amp) (208-240V Coil)
1	00-562597-00001	Contactor (20 Amp) (120V Coil)
1	00-562599-00001	Relay (1-Pole) (40 Amp) (240V)
1	00-562609-00002	Transformer (80VA, 120V)
1	00-562895-00001	Terminal Block (3-Pole, 40 Amp)
1	00-562894	Terminal Block (3-Pole, 115A, 600V)
1	00-562538-00002	Power Supply, 24V, 120W (Tall Models)
1	00-562538-00003	Power Supply, 24V, 65W (Standard Height Models)
10	FE-027-29	Fuse (4 Amp) (F1/F2)
5	FE-027-30	Fuse (0.8 Amp) (F3)
5	FE-025-61	Fuse (1.25 Amp, 250V) (F4)
1	00-87714-042-1	Relay (2-Pole, 120V Coil, 30 Amp) (480V Units)
1	00-562597-00003	Contactor (20 Amp) (208-240V Coil) (480V Units)
1	00-919742-00002	Terminal Block (480V Units)
1	00-562632	Transformer (500VA) (480V Units)
1	00-562598	Auxilary Switch (SCB Models)
1	00-941429-00002	Interlock Switch Assy. (Door Switch)
1	00-562710	Solenoid (24VDC) (Door Lock)
1	01-650033	Temperature Sensor Kit
1	01-297719-00001	Temperature Sensor Bracket
1	00-942185	High Limit Protector
1	01-605644-00001	Rinse Manifold, SST, High Temp
1	01-605881	Rinse Tee Service Kit, Chemical (SCB Models)
1	00-942096-00007	Rinse Pump (208-240V, 60Hz)
1	00-562262-00001	Booster Heater (208-240V) (9.5KW) (Includes Wires, Terminals & O-Ring)
1	00-562262-00002	Booster Heater (440-480V) (9.5KW) (Includes Wires, Terminals & O-Ring)
1	00-562262-00003	Booster Heater (380-415V) (9.5KW) (Includes Wires, Terminals & O-Ring)
1	00-562905	Booster Heater (208-240V) (5.7KW) (Includes Wires, Terminals & O-Ring) (SCB Models)
1	01-605772	Air Trap Service Kit (Booster) (Includes Air Trap, O-Ring, Fittings, Clamp, Tube)
1	00-328994	Rinse Probe Assy.
1	01-605881	Rinse Tee Service Kit (Chemical Tee) (Includes O-Ring) (SCB Models)
1	01-515893-00001	Gasket (Wash Pump Motor)
1	00-562075-00002	Wash Pump Motor (2 HP) (208-240V, 1-Phase)

Qty.	Part Number	Description
1	00-562075-00001	Wash Pump Motor (1.5 HP) (208-240V - 480V, 3-Phase) (380-415V, 480V Units)
1	00-941233-00014	Capacitor (1-Phase)
1	01-605145	Wash Arm Plug & O-Ring Kit
1	00-942096-00004	Drain Pump (208-240V, 60Hz)
1	00-975453	Fan (24V) (Standard Height Ventless Units)
1	00-913102-00507	Motor Controller & Gasket Assy. (24VDC) (Tall Ventless Units)
1	00-563072-00002	Valve (15 L/Min) (AM16-BAS/AM16T-BAS/AM16VL-BAS/AM16VLT-BAS/AM16-ASR/AM16T-ASR/AM16SCB/AM16VLSCB/AM16VLTSCB)
1	00-563073-00003	Dual Valve (AM16VL-ADV/AM16VLT-ADV/AM16SVL/AM16SVLT Models)
1	00-950437	Reed Switch Assy. (ASR Basket)
1	00-942096-00006	ASR Soil Pump (208-240V, 60Hz)
1	00-562182-00001	Wash Tank Heater (200-240V) (Includes O-Ring)
1	00-562182-00002	Wash Tank Heater (440-480V) (Includes O-Ring)
1	00-562182-00003	Wash Tank Heater (380-415V) (Includes O-Ring)
1	00-562904	Wash Tank Heater (Includes O-Ring) (AM16SCB)
1	00-942185	High Limit Protector
1	01-650033	Temperature Sensor Kit
1	01-515276-00001	Reed Switch (Wash Tank Strainer Basket)
1	00-563609	Pressure Sensor Kit (Includes Pressure Transducer, Air Trap, O-Ring, Clamps & Tube)
1	00-941638-00005	Chemical Pump (Green)
1	00-949651-00004	Tubing Kit (Includes Spring, Clamp & Tube)
1	00-950372-00002	Chemical Sensor Assy. (Detergent/Sanitizer)
1	00-950372-00003	Chemical Sensor Assy. (Rinse Aid)
1	00-562915	Replacement Chemical Cap Kit (Includes Cap & Clamp) (SCB Models)