CATALOG OF REPLACEMENT PARTS



C64A SERIES DISHWASHERS

MODEL 64A SERIES DISWASHER

ML- 103908 (R-L)
ML- 103909 (L-R)

A product of HOBART 701 S. RIDGE AVENUE TROY, OHIO 45374-0001

FORM 18366 Rev. D (May 2023)

 © HOBART 2023

Table of Contents

5 CONTROL BOX
7 COMPONENT PANEL (CONTROL BOX)
11 WASH MOTOR & PUMP UNITS(2 UNITS REQD)
13 UNIT / CONVEYOR DRIVE
17 TRACK & CRADLE (WASH/RINSE SECTION)
19 WASH ARMS & TUBES (WASH/RINSE SECTION)
21 FILL & OUTSIDE RINSE PIPING
25 INSIDE METALLIC RINSE PIPING
27 INSIDE RINSE PIPING (NON METALLIC)
29 ACTUATOR MECHANISM & RINSE DRAIN OFF PAN
31 DRAIN UNIT (WASH/RINSE SECTION)
33 DOORS, CURTAINS, BAFFLES, & STRAINERS
35 VENT HOOD
37 EXTENDED HOOD
39 MISCELLANEOUS (WASH/RINSE SECTION)
43 LOW WATER PROTECTION (STEAM HEAT/WASH & RINSE TANK)
45 ELECTRIC HEAT
47 GAS HEAT BURNERS, FLUES, & WIREWAYS
51 GAS HEAT COMPONENTS
55 STEAM COILS (2 UNITS REQD)
57 STEAM COIL PIPING
61 STEAM INJECTOR & PREVIOUS CONSTRUCTION STEAM COIL PIPING
65 STEAM INJECTOR HEAT (2 UNITS REQUIRED)
67 DISH RACKS
69 TABLE LIMIT SWITCH

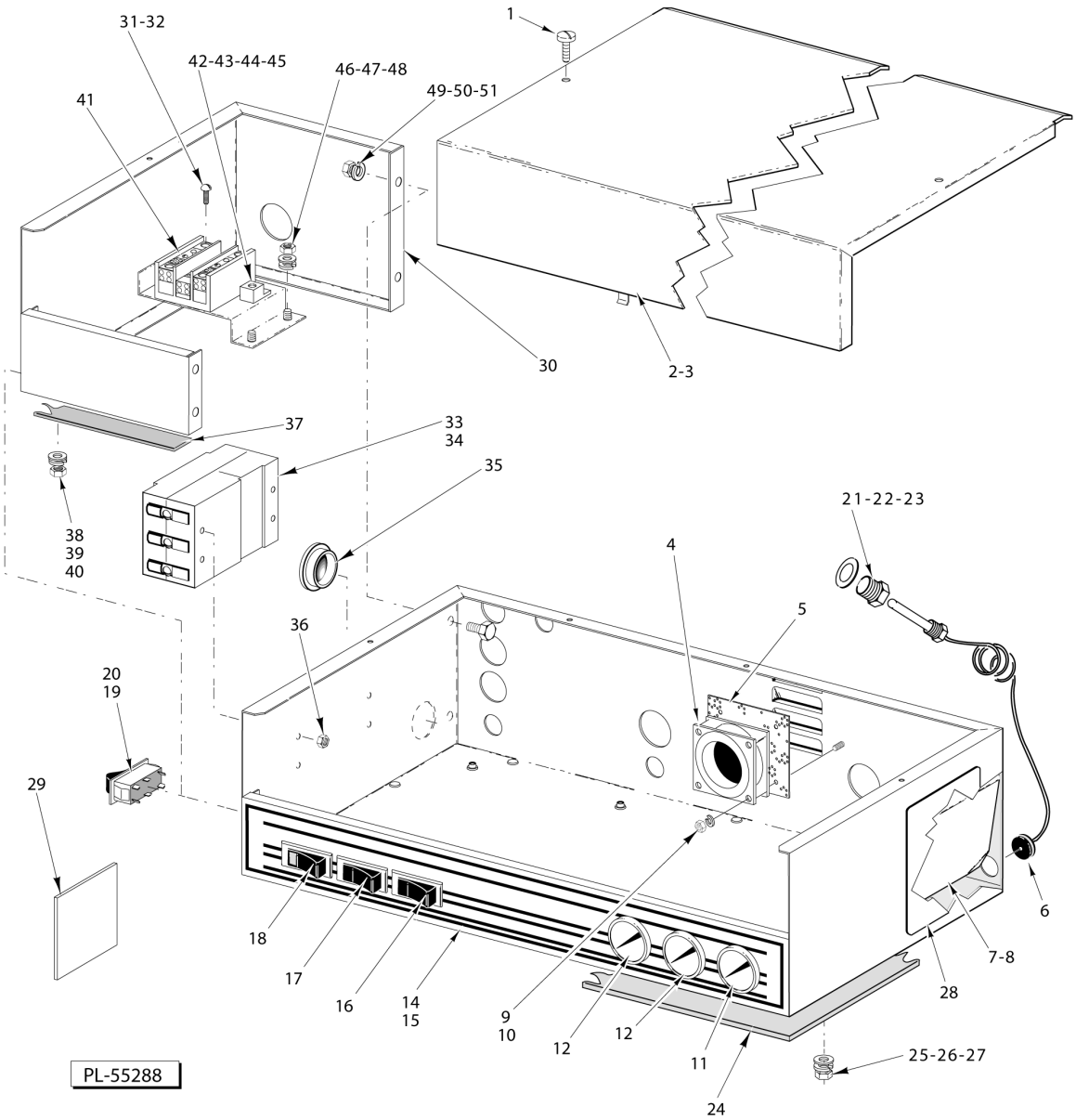
1
31-32
42-43-44-45
46-47-48
49-50-51
41
30
2-3
37
33
34
35
38
39
40
21-22-23
4
5
36
20
19
29
6
7-8
28
18
17
16
14
15
9
10
12
12
11
24
25-26-27
PL-55288

CONTROL BOX

CONTROL BOX

ILLUS. PL-55288	PART NO.	NAME OF PART	AMT.
1	SC-053-05	Mach Screw 10-24 x 3/8 Truss Hd, Slotted	2
2	00-436755-1	Cover - Control Box (W/O Single Point Electrical Connection)	1
3	00-437073-1	Cover - Control Box (W/Single Point Electrical Connection)	1
4	00-355504-1	Fan (115 V)	1
5	00-274884	Guard - Fan	1
6	00-274947	Grommet	1
7	00-328137	Shield	1
8	NS-031-15	Stop Nut 10-24 Hex (SST)	2
9	WL-006-42	Lockwasher #6 Medium (SST)	3
10	NS-011-07	Mach Nut 6-32 Hex	3
11	00-437041-00003	Thermometer (8 Ft.) (Final Rinse) Thermometer (8 Ft) (Final Rinse)	1
12	00-437041-00004	Thermometer (11 Ft.) (Wash / Rinse)	2
14	00-812854	Label - Control Box (W/O Conveyor Dwell)	AR
15	00-812848	Label - Control Box (Conveyor Dwell)	AR
16	00-087711-241-2	Switch - Rocker (DPDT) (Conveyor Dwell)	1
17	00-087711-228-1	Switch - Rocker (Motor On/Off)	1
18	00-087711-198-2	Switch - Rocker (Power On/Off)	1
19	00-087711-241-2	Switch - Rocker (DPDT) (Timer)	1
20	00-271840	Label - Timer	1
21	00-107218	Coupling - Thermometer Bulb	3
22	WS-012-40	Washer (SST)	4
23	FP-053-05	Pipe Locknut 1/2 NPSL (SST)	3
24	00-435072	Gasket	1
25	WS-022-01	Washer (SST)	6
26	WL-006-17	Lockwasher 1/4 Helical (SST)	6
27	NS-015-01	Nut 1/4 -20 Hex (SST)	6
28	00-814161	Label - Instruction	1
29	00-329408	Label - Instruction (Gas Heat)	1
30	00-437068	Control Box (Single Point Electrical Connection, Elec Heat Only)	1
31	SC-021-24	Mach Screw 10-24 x 5/8 Rd Hd	4
32	NS-031-16	Stop Nut 10-24 "Elastic" (SST)	4
33	00-276259-2	Circuit Breaker (20 Amp) (Used on 2240 V Machines)	1
34	00-276259-4	Circuit Breaker (40 Amp) (Used on 380-480 V Machines)	1
35	FE-024-13	Bushing - Electrical 2-1/2	1
36	NS-031-08	Stop Nut 8-32 "Special"	4
37	00-526408	Tape - Foam	AR
38	WL-006-17	Lockwasher 1/4 Helical (SST)	2
39	WS-017-06	Washer (SST)	2
40	NS-015-01	Nut 1/4 -20 Hex (SST)	2
41	00-119031	Block - Terminal	1
42	00-118544-2	Lug - Grounding	1
43	SC-021-23	Mach Screw 10-24 x 1/2 Rd Hd	1
44	WL-007-12	Lockwasher #10 External Shakeproof	1
45	NS-031-16	Stop Nut 10-24 "Elastic" (SST)	1
46	WL-006-17	Lockwasher 1/4 Helical (SST)	2
47	WS-022-01	Washer (SST)	2
48	NS-015-01	Nut 1/4 -20 Hex (SST)	2
49	NS-015-01	Nut 1/4 -20 Hex (SST)	4
50	WL-006-17	Lockwasher 1/4 Helical (SST)	4
51	SC-041-05	Cap Screw 1/4-20 x 5/8 Hex Hd	4
	FE-021-12	Plug - 1/2 Knockout (Plastic)	AR
	FE-023-26	Plug - 1 Knockout (Plastic)	AR

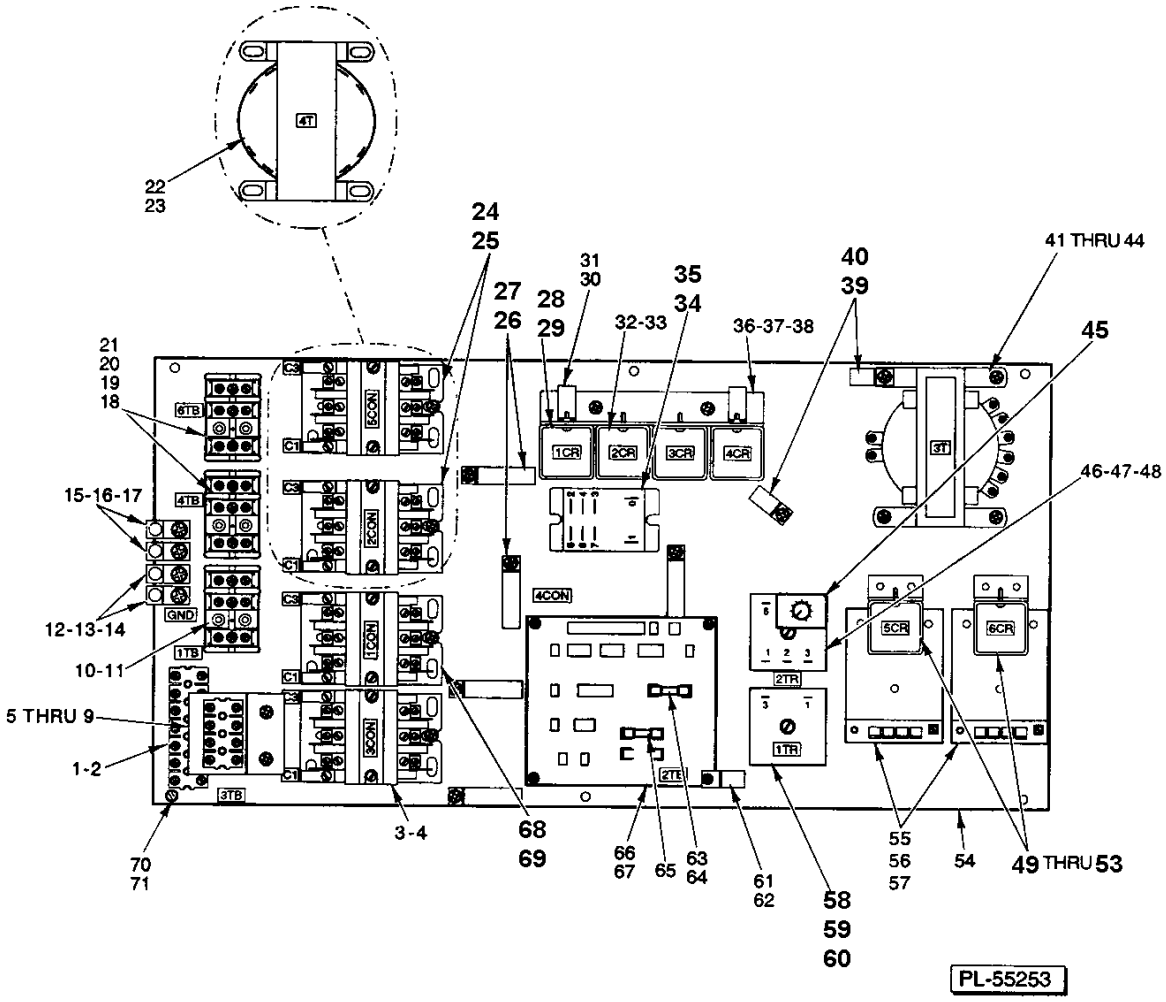

COMPONENT PANEL
(CONTROL BOX)

COMPONENT PANEL (CONTROL BOX)

ILLUS. PL-55253	PART NO.	NAME OF PART	AMT.
1	00-294325-013-5	Block - Terminal	1
2	SD-019-29	Self-Tapping Screw 6-20 x 1/2 Phil. Pan Hd., Type B	2
3	00-918322	Contactor (40 Amp., 3-Pole) Contactor (40 Amp.) (3 Pole) (Machines W/Conveyor Dwell)	1
4	SD-008-25	Self-Tapping Screw 10-16 x 3/8 Phil. Bind Hd., Type B	2
5	00-294325-013-4	Block - Terminal (Machines W/Vent Fan Control)	1
6	00-437101	Bracket - Vent Fan Control	1
7	SD-008-25	Self-Tapping Screw 10-16 x 3/8 Phil. Bind Hd., Type B	2
8	WL-014-07	Lockwasher #10 External Shakeproof (SST)	2
9	SD-019-29	Self-Tapping Screw 6-20 x 1/2 Phil. Pan Hd., Type B	2
10	00-294325-015-1	Block - Terminal	1
11	SD-037-21	Self-Tapping Screw 8-32 x 1 Phil. Fil. Hd., Type F	2
12	00-118544-2	Lug - Grounding	2
13	SD-035-77	Self-Tapping Screw 1/4 -20 x 3/8 Phil. Pan Hd., Type TT	2
14	WL-007-15	Lockwasher 1/4 External Shakeproof	2
15	00-118544-2	Lug - Grounding (Electric Heat)	2
16	SD-035-77	Self-Tapping Screw 1/4 -20 x 3/8 Phil. Pan Hd., Type TT	2
17	WL-007-15	Lockwasher 1/4 External Shakeproof	2
18	00-294325-015-1	Block - Terminal (200-240 V., 380-480 V., 3 Ph.) (Electric Heat)	2
19	00-294325-004-1	Block - Terminal (Not Shown) (200-240 V., 1 Ph.) (Electric Heat)	2
20	SD-037-21	Self-Tapping Screw 8-32 x 1 Phil. Fil Hd., Type F (Use with Item 18)	4
21	SD-008-36	Self-Tapping Screw 8-18 x 7/8 Phil. Rd. Hd., Type B (Use with Item 19)	4
22	00-294500-026-1	Transformer (75 VA) (Gas Heat)	1
23	SD-008-25	Self-Tapping Screw 10-16 x 3/8 Phil. Bind Hd., Type B	4
24	00-918322	Contactor (40 Amp., 3-Pole)	2
25	SD-008-25	Self-Tapping Screw 10-16 x 3/8 Phil. Bind Hd., Type B	4
26	00-294677-5	Clamp - Wire (1-1/2 I.D.)	5
27	SD-008-25	Self-Tapping Screw 10-16 x 3/8 Phil. Bind Hd., Type B	5
28	00-205113-1	Relay 3 P.D.T. (1CR, 3CR, & 4CR)	3
29	SD-019-29	Self-Tapping Screw 6-20 x 1/2 Phil. Pan Hd., Type B	6
30	00-294677-4	Clamp - Wire (1 I.D.)	2
31	SD-008-25	Self-Tapping Screw 10-16 x 3/8 Phil. Bind Hd., Type B	2
32	00-205113-00001	Relay (3.P.D.T.)	1
33	SD-019-29	Self-Tapping Screw 6-20 x 1/2 Phil. Pan Hd., Type B	2
34	00-087714-046-1	Contactor (Machines W/Vent Fan Control)	1
35	SD-008-18	Self-Tapping Screw 8-18 x 3/8 Phil. Bind Hd., Type B	2
36	00-437103	Bracket	1
37	SD-008-25	Self-Tapping Screw 10-16 x 3/8 Phil. Bind Hd., Type B	2
38	WL-014-07	Lockwasher #10 External Shakeproof (SST)	2
39	00-294677-4	Clamp - Wire (1 I.D.)	3
40	SD-008-25	Self-Tapping Screw 10-16 x 3/8 Phil. Bind Hd., Type B	3
41	00-294500-046-1	Transformer (150 VA, 50/60 Hz.) Pilot Control	1
42	00-294500-046-2	Transformer (300 VA) Pilot Control	1
43	SD-008-25	Self-Tapping Screw 10-16 x 3/8 Phil. Bind Hd., Type B	4
44	WL-014-07	Lockwasher #10 External Shakeproof (SST)	4
45	00-437070-1	Plug-On Module	1
46	00-087714-36	Relay Time Delay (Variable)	1
47	SD-036-13	Self-Tapping Screw 1/4 -20 x 1-1/4 Slotted Hex Washer Hd., Type T	1
48	WL-007-15	Lockwasher 1/4 External Shakeproof	1
49	00-205113-1	Relay (3 P.D.T.)	2
50	SD-019-29	Self-Tapping Screw 6-20 x 1/2 Phil. Pan Hd., Type B	4
51	00-437102	Bracket - Relay Mounting	2
52	SD-008-18	Self-Tapping Screw 10-16 x 3/8 Phil. Bind Hd., Type B	4
53	WL-014-05	Lockwasher #8 External Shakeproof (SST)	4
54	00-435508	Base Plate	1
55	00-475458-00001	Thermostat - Solid State (120 V.)	2

COMPONENT PANEL (CONTROL BOX)

ILLUS. PL-55253	PART NO.	NAME OF PART	AMT.
56	SC-098-07	Mach. Screw 4-40 x 1-3/4 Rd. Hd. (SST)	6
57	WS-028-12	Washer (Fiber)	2
58	00-087714-031-2	Relay Time Delay (5 Sec.)	1
59	SD-036-13	Self-Tapping Screw 1/4 -20 x 1-1/4 Slotted Hex Washer Hd., Type T	1
60	WL-007-15	Lockwasher 1/4 External Shakeproof	1
61	00-294677-3	Clamp - Wire	1
62	SD-019-31	Self-Tapping Screw 8-18 x 1/2 Phil. Pan Hd., Type B	1
63	FE-022-39	Fuse (1.5 Amp.) (250 V.)	1
64	FE-021-19	Fuse (3.2 Amp.) (250 V.) (50 Hz. & 50/60 Hz. Machines W/Blower Dryer &/or Condenser)	1
65	FE-023-80	Fuse (3.0 Amp.) (250 V.) (Gas Heat)	1
66	00-294676	P.C.B. - Terminal & Fuse	1
67	SD-008-18	Self-Tapping Screw 8-18 x 3/8 Phil. Bind Hd., Type B	3
68	00-087713-041-2	Contactor (40 Amp.) (3 Pole)	1
69	SD-008-25	Self-Tapping Screw 10-16 x 3/8 Phil. Bind Hd., Type B	2
70	SC-053-05	Mach. Screw 10-24 x 3/8 Slotted Truss Hd. (SST)	6
71	WL-007-12	Lockwasher #10 External Shakeproof	6

NOTES

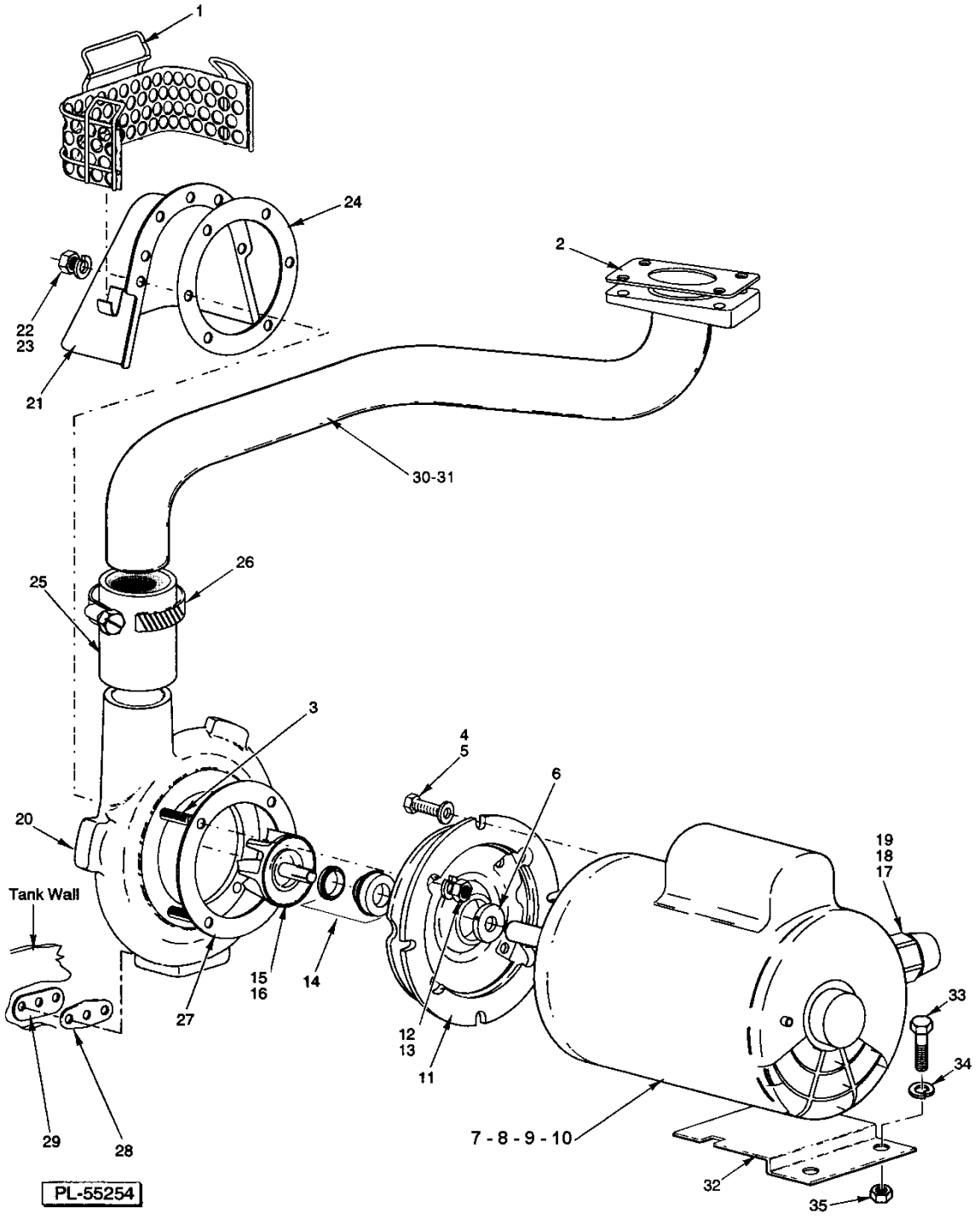

WASH MOTOR & PUMP UNITS(2 UNITS REQD)

WASH MOTOR & PUMP UNITS(2 UNITS REQD)

ILLUS. PL-55254	PART NO.	NAME OF PART	AMT.
1	00-328362	Strainer - Pump	1
2	00-270968	Gasket - Wash Pipe	1
3	00-274227-5	Stud	AR
4	SC-041-29	Cap Screw 3/8 -16 x 7/8 Hex Hd. (SST)	4
5	WS-006-44	Washer (SST)	4
6	00-274227-2	Clamp	1
7	00-274230-1	Motor (1 Ph., 60 Hz.) (2 HP)	1
8	00-274230-2	Motor (3 Ph., 60 Hz.) (2 HP)	1
9	00-274230-3	Motor (1 Ph., 50 Hz.) (2 HP)	1
10	00-274230-4	Motor (3 Ph., 50 Hz.) (2 HP)	1
11	00-274227-3	Adapter	1
12	WL-006-22	Lockwasher 5/16 Light (SST)	4
13	NS-015-11	Nut 5/16 -18 Hex	4
14	00-274227-6	Seal - Shaft	1
15	00-274227-12	Impeller & Sleeve (60 Hz.)	1
16	00-274227-7	Impeller & Sleeve (50 Hz.)	1
17	FE-024-61	Connector 45 Deg. (Non Metallic) "Sealtite" (1/2 Male Thd. x 1/2 Flex. Cnd.)	AR
18	FE-024-57	Connector Straight (Non Metallic) "Sealtite" (1/2 Male Thd. x 1/2 Flex. Cnd.)	AR
19	FE-008-10	1/2 Gasket Assy	1
20	00-274227-1	Pump Shell (Incls. Item 3)	1
21	00-274246	Shroud	1
22	WL-006-23	Lockwasher 5/16 Helical (SST)	10
23	NS-015-11	Nut 5/16 -18 Hex	10
24	00-119050	Gasket	1
25	00-749586	Hose - Discharge	1
26	00-542337	Clamp - Hose	2
27	00-274227-4	Gasket	1
28	00-119051	Gasket	2
29	00-812776	Support Plate	2
30	00-328411	Tube - Discharge (RH) (Shown)	1
31	00-328409	Tube - Discharge (LH)	1
32	00-812069	Bracket - Motor Support	1
33	SC-041-05	Cap Screw 1/4 -20 x 5/8 Hex Hd. (SST)	2
34	WL-006-17	Lockwasher 1/4 Helical (SST)	2
35	NS-015-01	Nut 1/4 -20 Hex (SST)	2

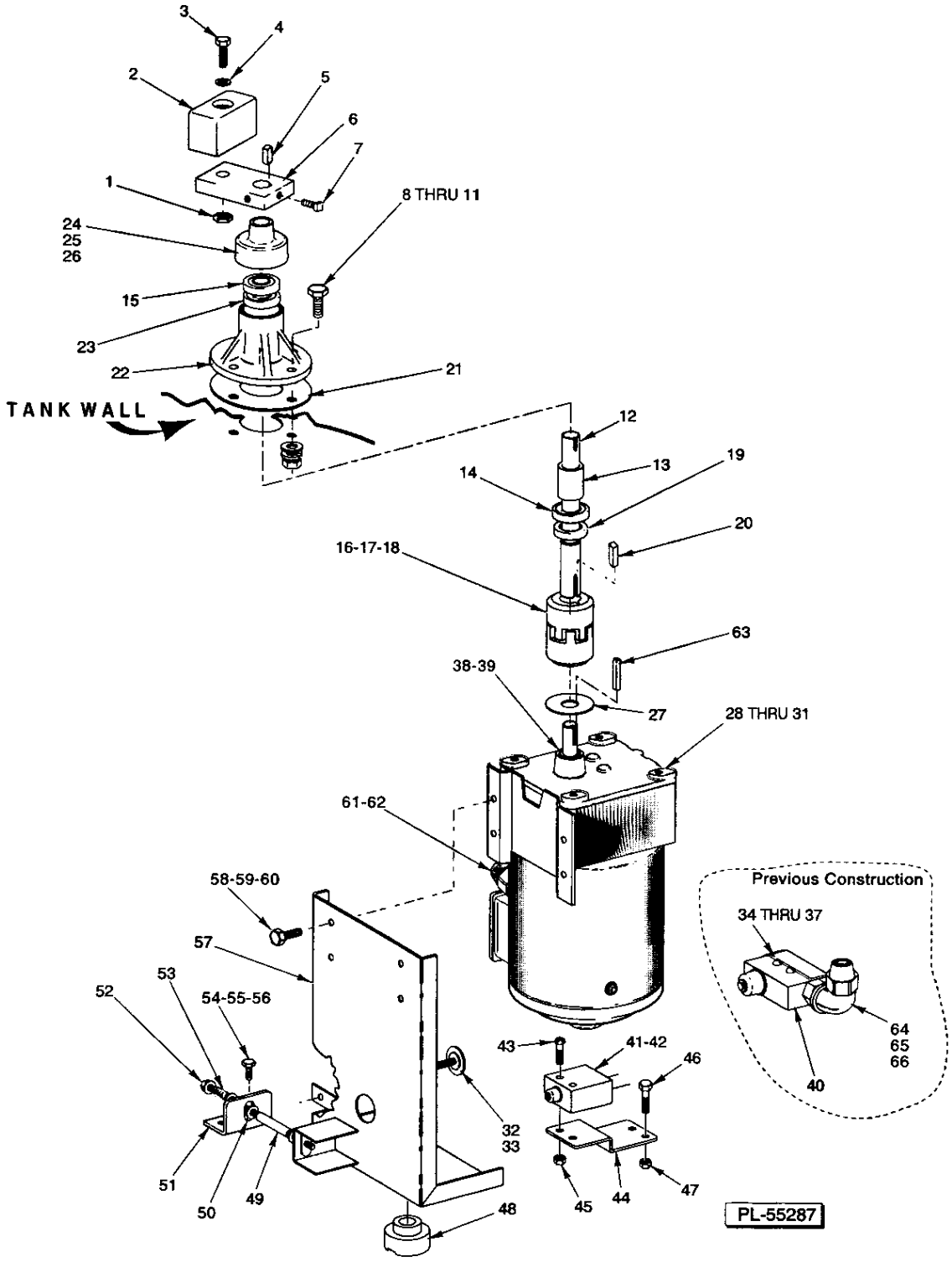

UNIT / CONVEYOR DRIVE

UNIT / CONVEYOR DRIVE

ILLUS. PL-55287	PART NO.	NAME OF PART	AMT.
1	NS-032-35	Stop Nut 5/16 -18 "Flexloc"	1
2	00-474660	Slider - Crank Arm	1
3	SC-041-20	Mach. Screw 5/16 -18 x 2-1/8 Truss Hd	1
4	WS-005-32	Washer (SST)	1
5	00-012430-39	Key 3/16 Sq. x 3/8 Lg	1
6	00-270943	Arm - Crank	1
7	SC-050-01	Set Screw 1/4 -20 x 1/2 Square Hd. Cup Pt	2
8	SC-041-13	Cap Screw 5/16 -18 x Hex Hd. (SST)	4
9	WS-017-18	Washer (Lead)	4
10	WL-006-23	Lockwasher 5/16 Helical (SST)	4
11	NS-015-11	Nut 5/16 -18 Hex	4
12	00-270937	Shaft - Crank	1
13	00-436879	Spacer - Bearing	1
14	BB-021-19	Ball Bearing - Hoover NSK 6003	1
15	00-270940	Seal - Upper Housing	1
16	00-328083	Coupling - Motor	1
*17	00-274228-2	Insert - Coupling Service (Lovejoy)	AR
*18	00-274228-1	Insert - Coupling Service (Browning)	AR
19	00-270939	Seal - Lower Housing	1
20	00-012430-40	Key 3/16 Sq. x 3/4 Lg	1
21	00-270942	Gasket	1
22	00-274749	Housing Assy. (Incls. Items 12 thru 15,19,23,& 24)	1
23	BB-021-19	Ball Bearing - Hoover NSK 6003	1
24	00-274748	Seal - Labyrinth	1
25	00-527042	Adhesive	AR
26	00-522696	Solvent	AR
27	00-474423	Flinger	1
28	00-437044-6	Motor - Conveyor Drive (200-230/460 V., 60 Hz.) (3 Ph.)(Incls. Items 38, 39, & 63)	1
29	00-437044-7	Motor - Conveyor Drive (200-240 V., 60 Hz., 1 Ph.) (Incls. Items 38, 39, & 63)	1
30	00-437044-8	Motor - Conveyor Drive (200-240 V., 50 Hz., 1 Ph.) (Incls. Items 38, 39, & 63)	1
31	00-437044-9	Motor - Conveyor Drive (220-240/380-415 V., 50 Hz., 3 Ph.)(Incls. Items 38, 39, & 63)	1
32	00-289256	Actuator - Switch	1
33	NS-032-33	Stop Nut 1/4 -28 "Flexloc"	1
34	SC-027-24	Mach. Screw 6-32 x 1-1/2 Rd. Hd	2
35	WL-010-22	Lockwasher #6 External Shakeproof	2
36	WS-002-06	Washer (Brass)	4
37	NS-010-06	Nut 6-32 Hex (Brass)	2
38	00-328379-1	Seal - Oil (Output Shaft-Shown)	1
39	00-328379-2	Seal - Oil (Motor Drive Shaft)	1
40	00-087711-60-1	Switch - Interlock (Incls. Items 34 thru 37)	1
41	00-087711-260	Switch - Interlock (Incls. Items 42 thru 46)	1
42	FE-022-84	Strain Relief	1
43	SC-127-89	Mach. Screw 10-24 x 3/4 Phil. Rd. Hd. (SST)	2
44	00-474488	Bracket - Switch	1
45	NS-031-16	Stop Nut 10-24 "Elastic" (SST)	2
46	SC-067-05	Mach. Screw 8-32 x 1/2 Hex Hd. (SST)	2
47	NS-031-08	Stop Nut 8-32 Hex (SST)	2
48	00-270927	Pilot Bearing	1
49	00-271083	Spacer - Overload	1
50	WS-029-5	Washer	4
51	00-436017	Bracket - Overload	1
52	SC-120-72	Cap Screw 5/16 -18 x 4-1/2 Hex Hd	1
53	00-436952	Spring - Overload	1
54	SC-041-11	Cap Screw 5/16 -18 x 3/4 Hex Hd. (SST)	2
55	WL-006-23	Lockwasher 5/16 Helical (SST)	2

UNIT / CONVEYOR DRIVE

ILLUS. PL-55287	PART NO.	NAME OF PART	AMT.
56	NS-015-11	Nut 5/16 -18 Hex	2
57	00-328027	Bracket - Motor	1
58	SC-041-31	Cap Screw 3/8 -16 x 1-1/4 Hex Hd	4
59	WL-006-29	Lockwasher 3/8 Hi-Collar (SST)	4
60	NS-015-13	Nut 3/8 -16 Hex (SST)	4
61	FE-024-61	Connector 45 Deg. (Non Metallic) "Sealtite" (1/2 Male Thd. x 1/2 Flex. Cnd.)	1
62	FE-024-65	Connector 90 Deg. (Non Metallic) "Sealtite" (1/2 Male Thd. x 1/2 Flex. Cnd.)	1
63	00-274231-57	Key - 3/16 x 3/16 x 1-1/8 Lg	1
64	FE-024-57	Connector Straight (Non Metallic) "Sealtite" (1/2 Male Thd. x 1/2 Flex. Cnd.)	1
65	FE-024-61	Connector 45 Deg. (Non Metallic) "Sealtite" (1/2 Male Thd. x 1/2 Flex. Cnd.)	1
66	FE-008-10	1/2 Gasket Assy	1

* Parts must be matched with same vendor coupling.

NOTES

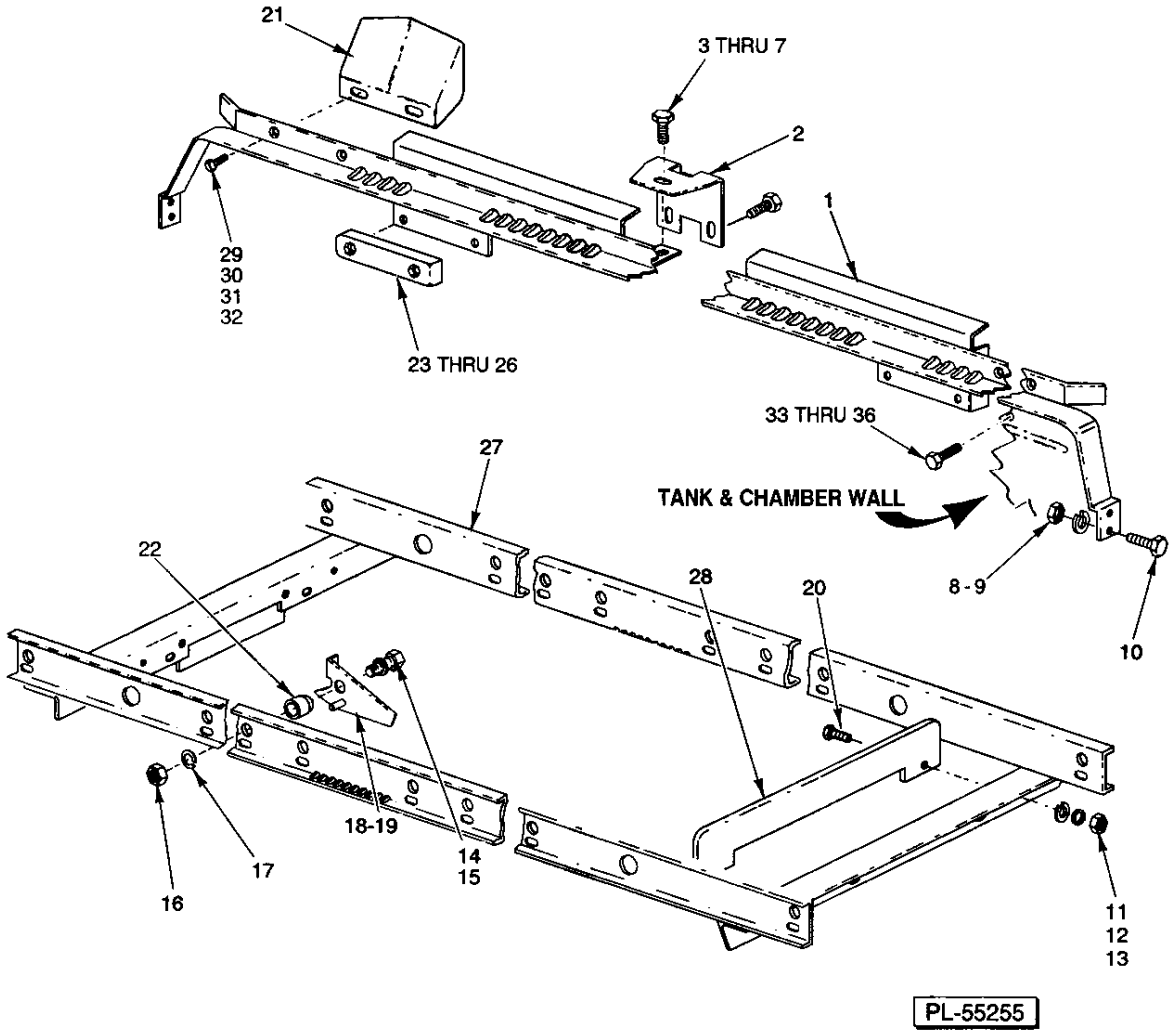

TRACK & CRADLE
(WASH/RINSE SECTION)

TRACK & CRADLE
(WASH/RINSE SECTION)

ILLUS. PL-55255	PART NO.	NAME OF PART	AMT.
1	00-435935-1	Rack Track	2
2	00-435975	Bracket - Track	2
3	SC-041-12	Cap Screw 5/16 -18 x 7/8 Hex Hd	6
4	WS-017-08	Washer (0.328 x 0.625 x 0.062) (SST)	4
5	WS-017-01	Washer 0.328 x 0.875 x 0.062 (SST)	4
6	WL-006-23	Lockwasher 5/16 Helical (SST)	6
7	NS-015-11	Nut 5/16 -18 Hex	6
8	NS-015-11	Nut 5/16 -18 Hex	8
9	WL-006-23	Lockwasher 5/16 Helical (SST)	8
10	SC-041-11	Cap Screw 5/16 -18 x 3/4 Hex Hd (SST)	8
11	NS-015-11	Nut 5/16 -18 Hex	AR
12	WS-017-08	Washer (0.328 x 0.625 x 0.062) (SST)	AR
13	WL-006-23	Lockwasher 5/16 Helical (SST)	AR
*14	WS-018-04	Washer (SST)	8
*15	SC-041-31	Cap Screw 3/8 -16 x 1-1/4 Hex Hd	8
*16	NS-046-09	Nut 3/8 -16 Hex (SST)	8
*17	WL-006-28	Lockwasher 3/8 Helical (SST)	8
*18	00-436704-1	Dog (Front, R-L) (Rear, L-R)	4
*19	00-436704-2	Dog - Not Shown (Front, L-R) (Rear, R-L)	4
20	SC-041-10	Cap Screw 5/16 -18 x 5/8 Hex Hd	AR
21	00-437047	Deflector - Silverware	AR
*22	00-270983	Spacer	8
23	00-473231	Slider - Large	4
24	SC-041-15	Cap Screw 5/16 -18 x 1-1/4 Hex Hd	8
25	WL-006-23	Lockwasher 5/16 Helical (SST)	8
26	NS-015-11	Nut 5/16 -18 Hex	8
27	00-435938	Cradle	1
28	00-271012	Baffle - Cradle Upper	AR
29	SC-127-91	Mach Screw 1/4 -20 x 5/8 Flat Hd (SST)	AR
30	WS-003-47	Washer (SST)	AR
31	WL-006-17	Lockwasher 1/4 Helical (SST)	AR
32	NS-015-01	Nut 1/4 -20 Hex (SST)	AR
33	SC-041-11	Cap Screw 5/16 -18 x 3/4 Hex Hd (SST)	14
34	WS-017-01	Washer 0.328 x 0.875 x 0.062 (SST)	18
35	WL-006-23	Lockwasher 5/16 Helical (SST)	18
36	NS-015-11	Nut 5/16 -18 Hex	18
	00-435937-1	Cradle & Dog Assy L-R (Standard Racks Only)(Incls Items 14 thru 19, 22, & 27)	1
	00-435937-3	Cradle & Dog Assy R-L (Standard Racks Only)(Incls Items 14 thru 19, 22, & 27)	1
	00-437057-1	Rack Track Assy (Incls Items 1 & 23 thru 26)	2

* Quantities listed are for 20 x 20 racks

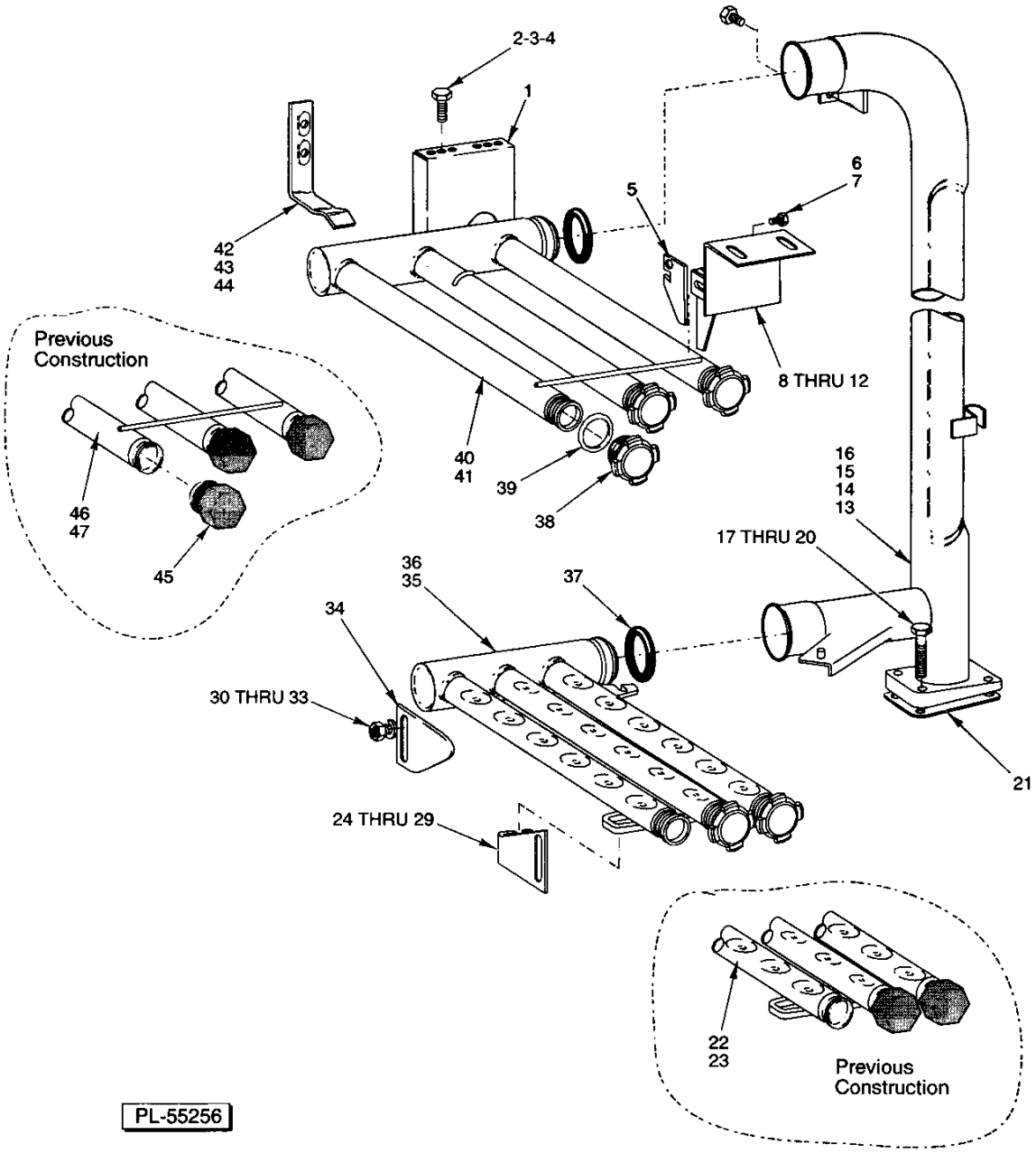

WASH ARMS & TUBES
(WASH/RINSE SECTION)

WASH ARMS & TUBES
(WASH/RINSE SECTION)

ILLUS. PL-55256	PART NO.	NAME OF PART	AMT.
1	00-436007	Guide - Upper Wash Arm	2
2	SC-125-27	Mach Screw 5/16 -18 x 3/4 Truss Hd (SST)	4
3	WS-017-01	Washer 0.328 x 0.875 x 0.062 (SST)	4
4	NS-036-19	Stop Nut 5/16 -18 Hex	4
5	00-289760	Latch	2
6	SC-041-01	Cap Screw 1/4 -20 x 3/4 Hex Hd	4
7	NS-031-19	Stop Nut 1/4 -20 "Elastic" (SST)	4
8	00-812819	Bracket	2
9	SC-053-17	Mach Screw 5/16 -18 x 3/4 Truss Hd (SST)	4
10	WS-017-08	Washer (0.328 x 0.625 x 0.062) (SST)	4
11	WL-006-23	Lockwasher 5/16 Helical (SST)	4
12	NS-015-11	Nut 5/16 -18 Hex	4
13	00-435999	Wash Pipe (26-1/8 Door Height) (RH)	1
14	00-435987	Wash Pipe (26-1/8 Door Height) (LH)	1
15	00-437134	Wash Pipe (32-1/8 Door Height) (RH)	1
16	00-437136	Wash Pipe (32-1/8 Door Height) (LH)	1
17	SC-041-18	Cap Screw 5/16 -18 x 1-3/4 Hex Hd (SST)	8
18	WS-017-08	Washer (0.328 x 0.625 x 0.062) (SST)	16
19	WL-006-23	Lockwasher 5/16 Helical (SST)	8
20	NS-015-11	Nut 5/16 -18 Hex	8
21	00-270968	Gasket - Wash Pipe	2
*22	00-436002	NLA - Obsolete--Wash Arm - Lower (RH) (Shown)	1
*23	00-436000	Wash Arm - Lower (LH)	1
24	00-436939-2	Catch - Adjustable (RH) (Shown)	1
25	00-436939-1	Catch - Adjustable (LH)	1
26	NS-015-11	Nut 5/16 -18 Hex	4
27	WL-006-23	Lockwasher 5/16 Helical (SST)	4
28	WS-017-8	Washer	4
29	SC-041-11	Cap Screw 5/16 -18 x 3/4 Hex Hd (SST)	4
30	SC-041-11	Cap Screw 5/16 -18 x 3/4 Hex Hd (SST)	4
31	WL-006-23	Lockwasher 5/16 Helical (SST)	4
32	WS-017-08	Washer (0.328 x 0.625 x 0.062) (SST)	4
33	NS-015-11	Nut 5/16 -18 Hex	4
34	00-274222	Support - Adjustable	2
35	00-749416	Wash Arm - Lower (RH) (Shown)	1
36	00-749415	Wash Arm - Lower (LH)	1
37	00-067500-110	"O" Ring	4
38	00-475589	Plug - Wash Arm (Used With Items 35, 37, 43, & 44)	12
39	00-067500-127	"O" Ring	12
40	00-749419	Wash Arm - Upper (RH) (Shown)	1
41	00-749417	Wash Arm - Upper (LH)	1
42	00-436947-1	Hanger	4
43	SC-041-50	Cap Screw 1/4 -20 x 1/2 Hex Hd	8
44	WL-006-17	Lockwasher 1/4 Helical (SST)	8
45	00-475087	Plug - Wash Arm (Used With Items 22, 23, 46, & 47)	12
*46	00-436945	NLA - Obsolete--Wash Arm - Upper (RH) (Shown)	1
*47	00-436946	Wash Arm - Upper (LH)	1

* Obsolete part number For replacement, use 35, 36, 40, or 41 with Items 38 & 39

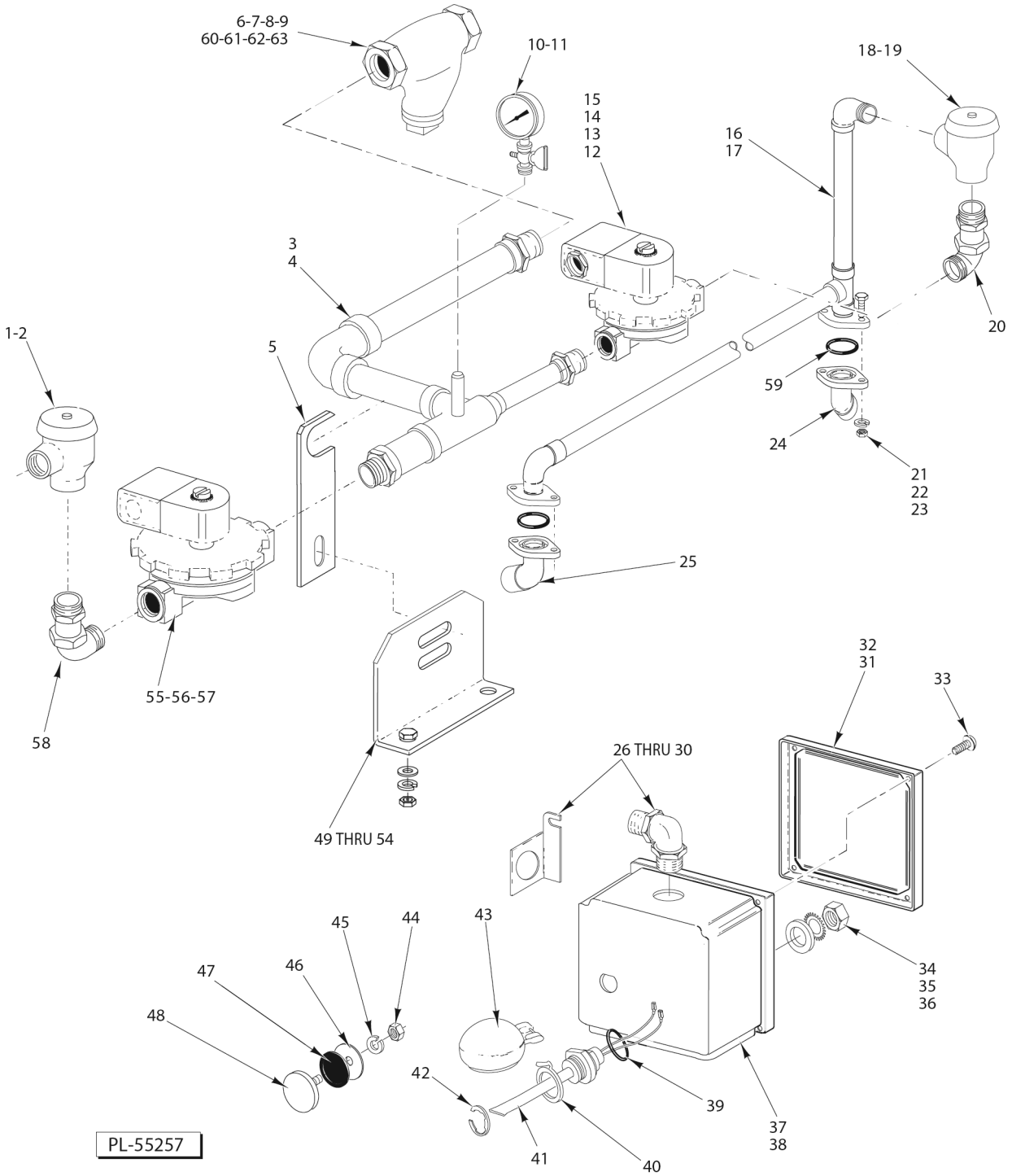

FILL & OUTSIDE RINSE PIPING

FILL & OUTSIDE RINSE PIPING

ILLUS. PL-55257	PART NO.	NAME OF PART	AMT.
1	00-277112	Vacuum Breaker	1
2	00-118270	Service Kit - Vacuum Breaker	1
3	00-812956-2	Piping Sub-Assy. (R-L)	1
4	00-812956-1	Piping Sub-Assy. (L-R)	1
5	00-435967	Plate - Fill Piping	1
*6	00-186922	Strainer - Line (3/4 In.) (Brass) (Kitz) (Incls. Items 8, 9, & 10) (Alternate to Item 60)	1
7	00-186923	Plug - Branch	1
8	00-186924	Gasket - Branch Plug	1
9	00-186925	Screen - Line Strainer	1
10	00-328247	Pressure Gauge - Water	1
11	00-436319	Petcock 1/4	1
12	00-435968-1	Solenoid Valve 1/2 (115 V.) (Incls. Item 13)	1
13	00-271839-1	Coil - Solenoid Valve	1
14	FE-024-57	Connector Straight (Non Metallic) "Sealtite" (1/2 Male Thd. x 1/2 Flex. Cnd.)	2
15	FE-024-61	Connector 45 Deg. (Non Metallic) "Sealtite" (1/2 Male Thd. x 1/2 Flex. Cnd.)	2
16	00-329831-2	Fill Piping - Outside (R-L)	1
17	00-329831-1	Fill Piping - Outside (L-R)	1
18	00-292909-2	Vacuum Breaker 1/2	1
19	00-292910	Vacuum Breaker Float & Seal Assy	1
20	00-329829	Adapter & Elbow Weldment 1/2	1
21	SC-041-15	Cap Screw 5/16 -18 x 1-1/4 Hex Hd	4
22	WL-006-23	Lockwasher 5/16 Helical (SST)	4
23	NS-015-11	Nut 5/16 -18 Hex	4
24	00-435972-2	Piping - Inside (RH)	1
25	00-435972-1	Piping - Inside (LH)	1
26	WL-013-16	Lockwasher 5/16 Internal Shakeproof (C64A Machines)	1
27	00-436718	Ground Strap (C64A Machines)	1
28	FE-006-37	Elbow 90 Deg. Short (1/2 Male Thd. x 1/2 Thinwall) (C64A Machines)	2
29	FE-008-10	1/2 Gasket Assy. (C64A Machines)	2
30	FE-006-07	Lock Nut 1/2 (Cnd.) (C64A Machines)	2
31	00-112007	Gasket (C64A Machines)	1
32	00-288465	Lid & Gasket Assy. (Incls. Item 58)(C64A Machines)	1
33	SD-012-20	Self-Tapping Screw 8-32 x 1/2 Phil. Truss Hd., Type T(C64A Machines)	4
34	NS-018-28	Jam Nut 1/2 -20 Hex Fin(C64A Machines)	1
35	WL-014-31	Lockwasher 1/2 External Shakeproof (SST)(C64A Machines)	1
36	WS-010-40	Washer - Thrust (C64A Machines)	1
37	00-270926	Junction Box - Auto Fill (RH) (R-L)(C64A Machines) (C64A Machines)	1
38	00-436026	Junction Box - Auto Fill (LH) (L-R)(C64A Machines)(C64A Machines)	1
39	00-067500-72	"O" Ring (C64A Machines)	1
40	00-112467	Retainer - Float (C64A Machines)	1
41	00-271622	Probe & Switch Assy. (2 Wire) (Water Level) (C64A Machines)	1
42	RR-010-13	Retaining Ring.(C64A Machines)	1
43	00-122674	Float Assy.(C64A Machines)	1
44	NS-015-01	Nut 1/4 -20 Hex (SST)	AR
45	WL-006-17	Lockwasher 1/4 Helical (SST)	AR
46	WS-003-47	Washer (SST)	AR
47	00-067500-31	"O" Ring	AR
48	00-119244	Cap & Stud Assy	AR
49	00-435974	Bracket - Fill Piping	1
50	SC-041-12	Cap Screw 5/16 -18 x 7/8 Hex Hd	2
51	SC-041-11	Cap Screw 5/16 -18 x 3/4 Hex Hd. (SST)	2
52	WS-029-05	Washer 0.328 x 0.750 x 0.062 (SST)	6
53	WL-006-23	Lockwasher 5/16 Helical (SST)	4
54	NS-015-11	Nut 5/16 -18 Hex	4
55	00-271002-01	Solenoid Valve 3/4 (115 V.) (Incls. Items 56 & 57)	1

FILL & OUTSIDE RINSE PIPING

ILLUS. PL-55257	PART NO.	NAME OF PART	AMT.
56	00-271838	Service Kit - Solenoid Valve	1
57	00-271839-01	Coil - Solenoid Valve	1
58	00-328764	Adapter & Elbow Weldment	1
59	00-067500-12	"O" Ring	4
*60	00-186922	Strainer - Line (3/4 In.) (Brass) (Apollo / Conbraco) (Incls. Items 81, 62, & 63) (Alternate to Item 6)	1
61	00-749802-00001	Cap	1
62	00-749802-00002	Gasket	1
63	00-749802-00003	Screen (80 Mesh)	1
64	00-065890-85	Line - Splice (C64A Machines)	2

* Kitz line strainer is approx. 1/4" shorter than Apollo / Conbraco.

NOTES

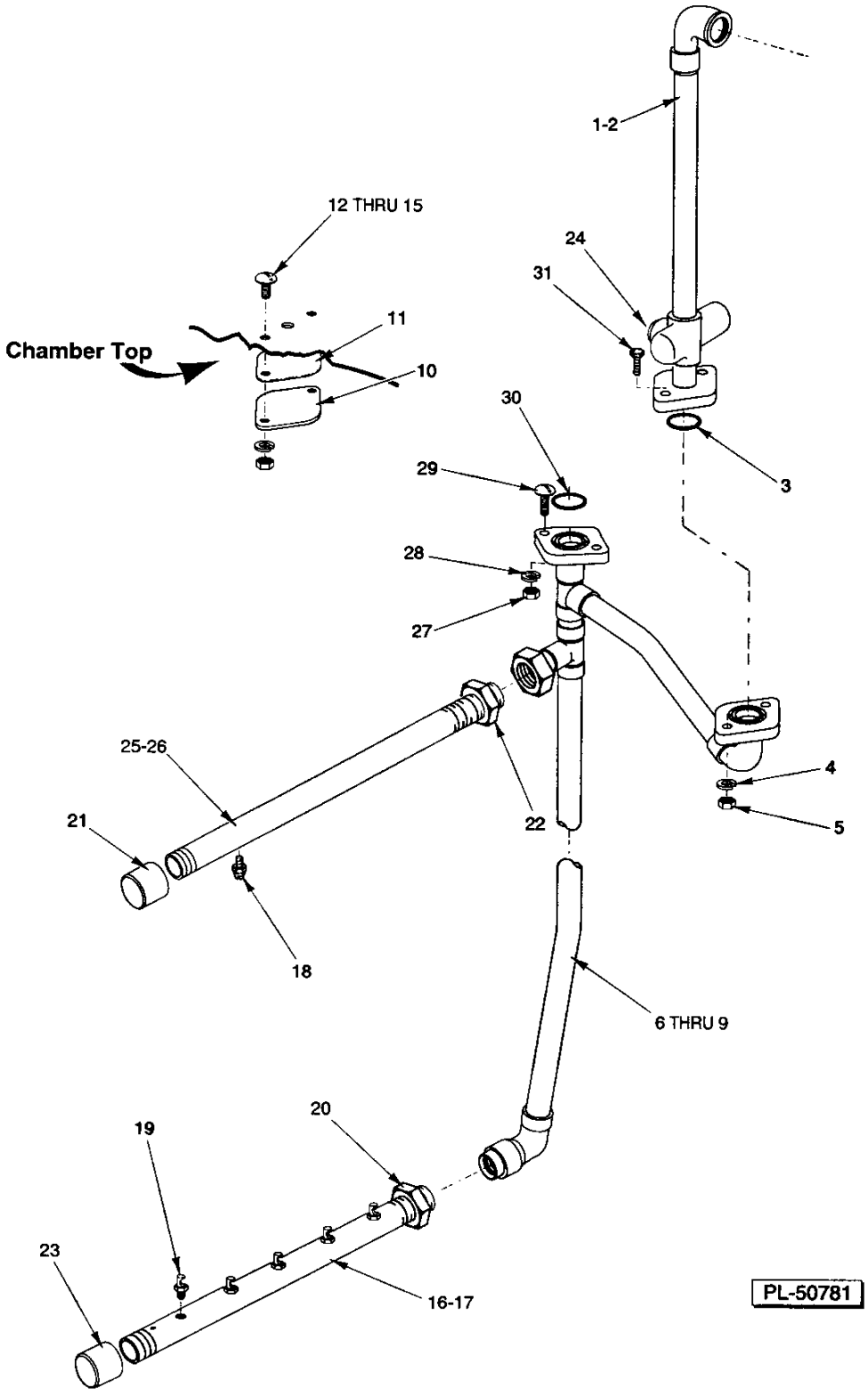

INSIDE METALLIC RINSE PIPING

INSIDE METALLIC RINSE PIPING

ILLUS. PL-50781	PART NO.	NAME OF PART	AMT.
1	00-329610-1	Final Rinse Outside Piping (R-L)	1
2	00-329610-2	Final Rinse Outside Piping (L-R)	1
3	00-067500-12	"O" Ring	2
4	WL-006-23	Lockwasher 5/16 Helical (SST)	2
5	NS-015-11	Nut 5/16 -18 Hex	2
6	00-435979-1	Final Rinse Inside Piping (R-L) (26 1/8 Door Height)	1
7	00-435979-2	Final Rinse Inside Piping (L-R) (26 1/8 Door Height)	1
8	00-437132-1	Final Rinse Inside Piping (R-L) (32 1/8 Door Height)	1
9	00-437132-2	Final Rinse Inside Piping (L-R) (32 1/8 Door Height)	1
10	00-122402-2	Flange	1
11	00-276407	Gasket - Rinse Pipe	1
12	SC-053-16	Mach Screw 5/16 -18 x 5/8 Truss Hd	2
13	SC-053-15	Mach Screw 5/16 -18 x 1/2 Truss Hd (SST)	2
14	WL-006-23	Lockwasher 5/16 Helical (SST)	4
15	NS-015-11	Nut 5/16 -18 Hex	4
16	00-271027-1	Lower Rinse Arm (R-L) 5 Nozzles (Incls Items 19, 20, & 23)	1
17	00-271027-2	Lower Rinse Arm (L-R) 5 Nozzles (Incls Items 19, 20, & 23)	1
18	00-81812	Nozzle - Rinse (Brass0) (0.078 Dia Orifice)	6
19	00-022731-3	Nozzle - Rinse (SST) #50 Drill (0.070)	5
20	FP-030-27	Lock Nut 1/2 NPSL Pipe (Brass)	1
21	FP-029-08	Pipe Cap 1/2 (Brass)	1
22	FP-030-27	Lock Nut 1/2 NPSL Pipe (Brass)	1
23	FP-029-08	Pipe Cap 1/2 (Brass)	1
24	FP-028-03	Pipe Plug 1/8 Sq Hd (Brass)	1
25	00-271088-1	Upper Rinse Arm (R-L) 6 Nozzles (Incls Items 18, 21, & 22)	1
26	00-271088-2	Upper Rinse Arm (L-R) 6 Nozzles (Incls Items 18, 21, & 22)	1
27	NS-015-11	Nut 5/16 -18 Hex	2
28	WL-006-23	Lockwasher 5/16 Helical (SST)	2
29	SC-053-18	Mach Screw 5/16 -18 x 7/8 Truss Hd (SST)	2
30	00-67500-12	"O" Ring	1
31	SC-041-15	Cap Screw 5/16 -18 x 1 1/4 Hex Hd	2

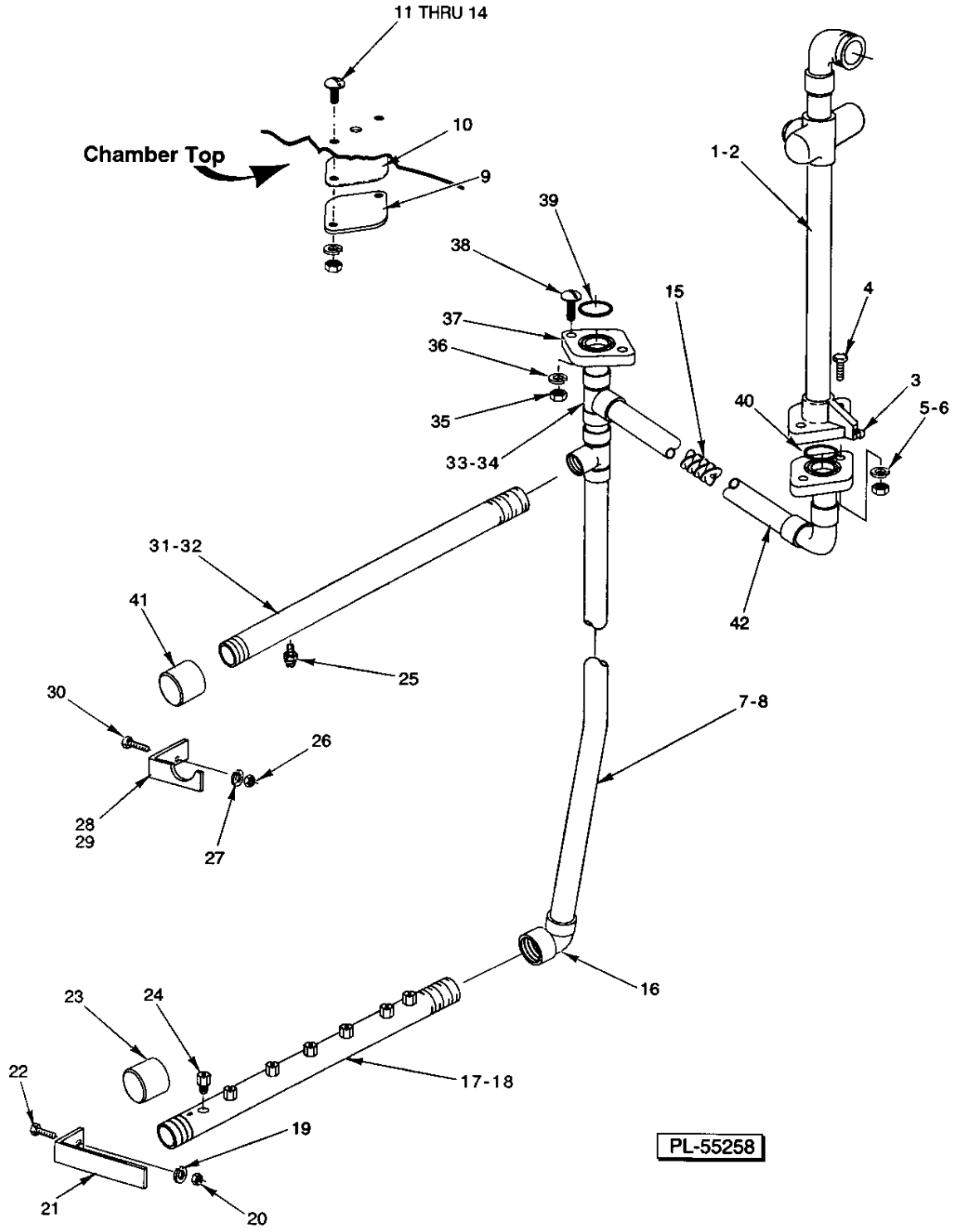

INSIDE RINSE PIPING
(NON METALLIC)

INSIDE RINSE PIPING
(NON METALLIC)

ILLUS. PL-55258	PART NO.	NAME OF PART	AMT.
1	00-329608-1	Final Outside Rinse Piping (R-L)	1
2	00-329608-2	Final Outside Rinse Piping (L-R)	1
3	FP-028-03	Pipe Plug 1/8 Sq Hd (Brass)	2
4	SC-041-15	Cap Screw 5/16 -18 x 1 1/2 Hex Hd	2
5	WL-006-23	Lockwasher 5/16 Helical (SST)	2
6	NS-015-11	Nut 5/16 -18 Hex	2
7	00-274708	Tube - Inside Rinse (32 1/8 Door Height)	1
8	00-274536	Tube - Inside Rinse (26 1/8 Door Height)	1
9	00-122402-2	Flange	1
10	00-276407	Gasket - Rinse Pipe	1
11	SC-053-16	Mach Screw 5/16 -18 x 5/8 Truss Hd	2
12	SC-053-15	Mach Screw 5/16 -18 x 1/2 Truss Hd (SST)	2
13	WL-006-23	Lockwasher 5/16 Helical (SST)	4
14	NS-015-11	Nut 5/16 -18 Hex	4
15	00-435070	Mixer - Spiral	1
16	00-185781	Elbow - 1/2 x 90 Deg (PVC)	2
17	00-476504-1	Lower Rinse Arm (R-L) 7 Nozzles (Incls Items 23 & 24)	1
18	00-476504-2	Lower Rinse Arm (L-R) 7 Nozzles (Incls Items 23 & 24)	1
19	WL-006-16	Lockwasher 1/4 Helical (SST)	2
20	NS-015-01	Nut 1/4 -20 Hex (SST)	2
21	00-274570	Bracket	1
22	SC-128-05	Mach Screw 1/4 -20 x 1/2 Fil Hd (SST)	2
23	00-276380-2	Cap - Lower Rinse Arm	1
24	00-476369	Nozzle - Rinse (SST) #50 Drill (0.070)	7
25	00-081812-2	Nozzle - Rinse (SST) (0.078 Dia Orifice)	6
26	NS-015-01	Nut 1/4 -20 Hex (SST)	2
27	WL-006-16	Lockwasher 1/4 Helical (SST)	2
28	00-274532-1	Bracket (R-L)	1
29	00-274532-2	Bracket (L-R)	1
30	SC-024-06	Mach Screw 1/4 -20 x 1/2 Fil Hd (SST)	2
31	00-274535-1	Upper Rinse Arm (R-L) 6 Nozzles (Incls Items 25 & 41)	1
32	00-274535-2	Upper Rinse Arm (L-R) 6 Nozzles (Incls Items 25 & 41)	1
33	FP-085-51	Tee 1/2 x 1/2 x 1/2 NPT Schedule 80 PVC	2
34	00-274531-2	Tube (1 1/4 Lg)	1
35	NS-015-11	Nut 5/16 -18 Hex	2
36	WL-006-23	Lockwasher 5/16 Helical (SST)	2
37	00-274533	Flange	2
38	SC-053-18	Mach Screw 5/16 -18 x 7/8 Truss Hd (SST)	2
39	00-067500-12	"O" Ring	1
40	00-067500-12	"O" Ring	2
41	00-276380-2	Cap - Upper Rinse Arm	1
42	00-274531-3	Tube - Inside Rinse 15 1/8 Lg	1

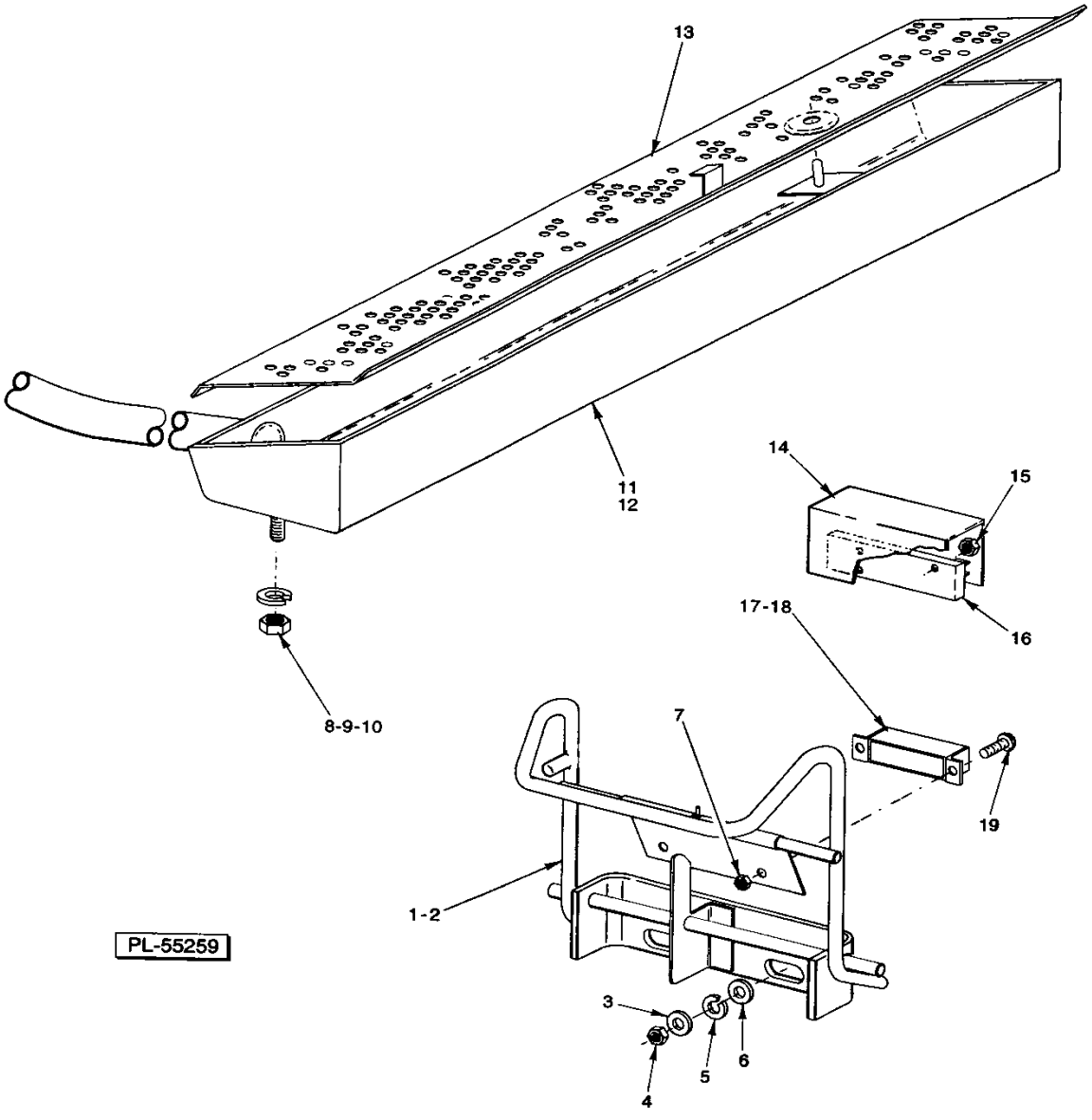

ACTUATOR MECHANISM & RINSE DRAIN OFF PAN

ACTUATOR MECHANISM & RINSE DRAIN OFF PAN

ILLUS. PL-55259	PART NO.	NAME OF PART	AMT.
1	00-436027	Actuator (L-R)	1
2	00-436955	Actuator (R-L)	1
3	WS-029-05	Washer 0.328 x 0.750 x 0.062 (SST)	2
4	NS-036-19	Stop Nut 5/16 -18	2
5	WL-006-23	Lockwasher 5/16 Helical (SST)	2
6	WS-017-08	Washer (0.328 x 0.625 x 0.062) (SST)	2
7	NS-031-50	Stop Nut 6-32 Hex (SST)	2
8	WS-003-49	Washer 0.266 x 0.563 x 0.062 (SST)	2
9	WL-006-17	Lockwasher 1/4 Helical (SST)	2
10	NS-015-01	Nut 1/4 Hex (SST)	2
11	00-329579-5	Rinse Pan Assy (L-R)	1
12	00-329579-6	Rinse Pan Assy (R-L)	1
13	00-812922-1	Strainer	1
14	00-270996	Insulator - Switch	1
15	NS-031-50	Stop Nut 6-32 Hex (SST)	2
16	00-892896	Kit - Service Reed Switch	1
17	00-290160	Magnet (Dot Not Visible)	1
18	00-290159	Retainer - Magnet	1
19	SC-127-26	Mach. Screw 6-32 x 3/8 Rd Hd (SST)	2

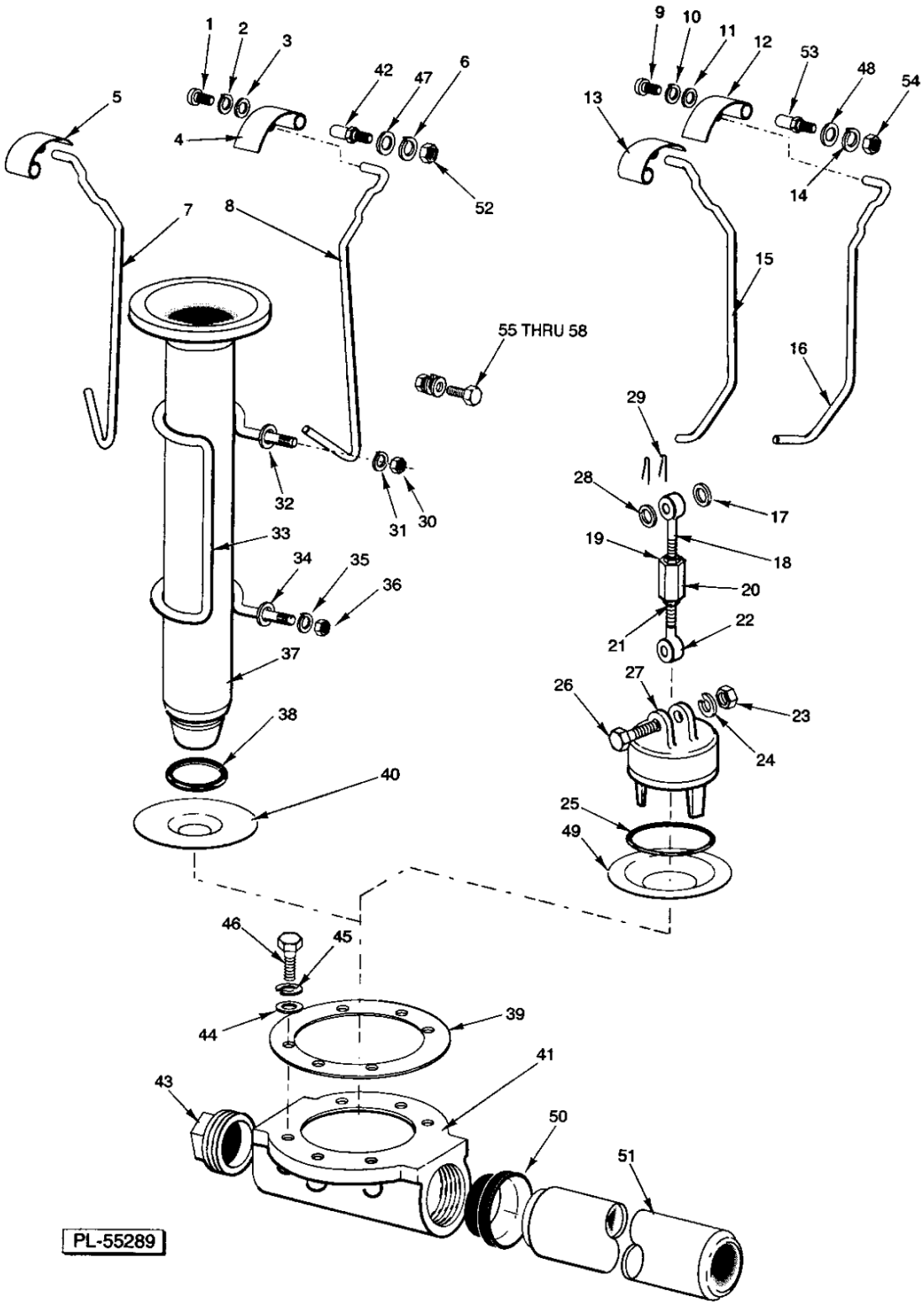

DRAIN UNIT
(WASH/RINSE SECTION)

DRAIN UNIT
(WASH/RINSE SECTION)

ILLUS. PL-55289	PART NO.	NAME OF PART	AMT.
1	SC-021-22	Mach Screw 10-24 x 3/8 Rd Hd (SST)	2
2	WL-006-07	Lockwasher #10 Helical (SST)	2
3	WS-023-34	Washer (SST)	2
4	00-271070	Drain Lever (RH)	1
5	00-274096	Drain Lever (LH)	1
6	WL-006-17	Lockwasher 1/4 Helical (SST)	2
7	00-436953	Lift Rod Overflow (LH)	1
8	00-436954	Lift Rod Overflow (RH)	1
*9	SC-021-22	Mach Screw 10-24 x 3/8 Rd Hd (SST)	2
*10	WL-006-07	Lockwasher #10 Helical (SST)	2
*11	WS-023-34	Washer (SST)	2
*12	00-271070	Drain Lever (RH)	1
*13	00-274096	Drain Lever (LH)	1
*14	WL-006-17	Lockwasher 1/4 Helical (SST)	2
*15	00-436961	Lift Rod - Drain (LH)	1
*16	00-436962	Lift Rod - Drain (RH)	1
*17	WS-017-08	Washer (0.328 x 0.625 x 0.062) (SST)	2
*18	00-065958	Pull Rod	2
*19	NS-018-06	Jam Nut 5/16-18 Hex Fin	2
*20	00-016269	Nut - Pull Rod Adjustor	2
*21	NS-018-06	Jam Nut 5/16-18 Hex Fin	2
*22	00-065958	Pull Rod	2
*23	NS-015-11	Nut 5/16-18 Hex (SST)	2
*24	WL-006-23	Lockwasher 5/16 Helical (SST)	2
*25	00-067500-00118	O-Ring "O" Ring	2
*26	SC-041-17	Cap Screw 5/16-18 x 1 1/2 Hex Hd (SST)	2
*27	00-077466	Plug - Drain	2
*28	WS-017-08	Washer (0.328 x 0.625 x 0.062) (SST)	2
*29	PC-005-02	Cotter Pin 1/16 x 1/2 (SST)	4
30	NS-015-11	Nut 5/16 -18 Hex	4
31	WL-006-23	Lockwasher 5/16 Helical (SST)	2
32	WS-017-01	Washer 0.328 x 0.875 x 0.062 (SST)	4
33	00-270952-2	Retainer	2
34	WS-017-01	Washer 0.328 x 0.875 x 0.062 (SST)	4
35	WL-006-23	Lockwasher 5/16 Helical (SST)	2
36	NS-015-11	Nut 5/16 -18 Hex	4
37	00-119099-2	Tube - Overflow	2
38	00-067500-120	"O" Ring	2
39	00-289464	Gasket - Drain	2
40	00-270947	Sleeve - Drain Body	2
41	00-289465	Drain Body	2
42	00-119116	Axle - Drain Lever	2
43	FP-028-32	Pipe Plug 2 Sq Hd	1
44	WS-006-44	Washer (SST)	12
45	WL-006-28	Lockwasher 3/8 Helical (SST)	12
46	SC-041-30	Cap Screw 3/8 -16 x 1 Hex Hd (SST)	12
47	WS-022-01	Washer (SST)	2
*48	WS-022-01	Washer (SST)	2
*49	00-106283	Sleeve - Drain Valve Body	1
50	00-328813	Bushing - Drain	2
51	00-274132-5	Drain Pipe - Wash/Rinse Section	1
52	NS-015-01	Nut 1/4 -20 Hex (SST)	2
*53	00-119116	Axle - Drain Lever	2
*54	NS-015-01	Nut 1/4 -20 Hex (SST)	2
55	SC-041-11	Cap Screw 5/16 -18 x 3/4 Hex Hd (SST)	AR
56	WS-017-01	Washer 0.328 x 0.875 x 0.062 (SST)	AR
57	WL-006-23	Lockwasher 5/16 Helical (SST)	AR
58	NS-015-11	Nut 5/16 -18 Hex	AR

* Use in wash/rinse tank on machines with RS or PW

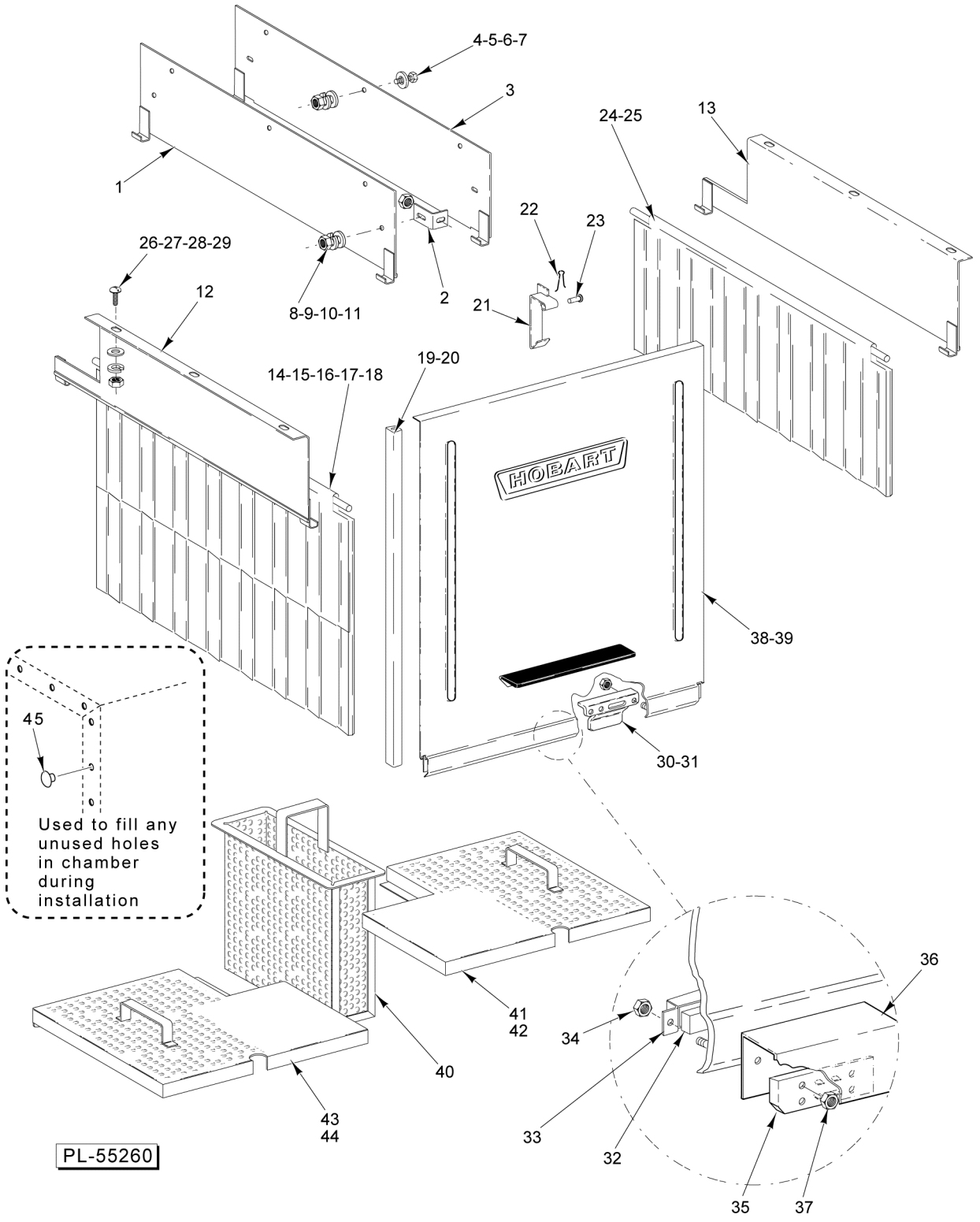

DOORS, CURTAINS, BAFFLES, & STRAINERS

DOORS, CURTAINS, BAFFLES, & STRAINERS

ILLUS. PL-55260	PART NO.	NAME OF PART	AMT.
1	00-435963-00001	Baffle - Center	1
2	00-289828	Bracket	2
3	00-435962-00001	Baffle - Center	1
4	SC-041-05	Cap Screw 1/4-20 x 5/8 Hex Hd. (SST)	10
5	WS-003-49	Washer 0.266 x 0.563 x 0.062 (SST)	13
6	WL-006-17	Lockwasher 1/4 Helical (SST)	11
7	NS-015-01	Nut 1/4-20 Hex (SST)	11
8	SC-041-05	Cap Screw 1/4-20 x 5/8 Hex Hd. (SST)	2
9	WS-022-01	Washer (SST)	2
10	WL-006-17	Lockwasher 1/4 Helical (SST)	2
11	NS-015-01	Nut 1/4-20 Hex (SST)	2
12	00-436959-00001	Baffle - Final Rinse (R-L)	1
13	00-435982-00001	Baffle - Final Rinse (L-R)	1
14	00-271084	Splash Curtain (26-1/8 Door Height)	4
15	00-271084-00002	Splash Curtain (32-1/8 Door Height)	4
16	00-120266-00001	Curtain Rod	4
17	00-120152-00055	Splash Curtain Assy. (26-1/8 Door Height) (Incls. Items 14 & 16)	AR
18	00-120152-00056	Splash Curtain Assy. (32-1/8 Door Height) (Incls. Items 15 & 16)	AR
19	00-112378-00049	Door Slide (26-1/8 Door Height)	4
20	00-112378-00050	Door Slide (32-1/8 Door Height)	4
21	00-185864	Catch - Door	2
22	PC-005-02	Cotter Pin 1/16 x 1/2 (SST)	2
23	00-012114	Pin	2
24	00-120151-00001	Splash Curtain (10-C1)	1
25	00-120266-00001	Curtain Rod	1
26	SC-053-42	Mach. Screw 1/4-20 x 5/8 Slotted Truss Hd. (SST)	6
27	WS-022-01	Washer (SST)	6
28	WL-006-17	Lockwasher 1/4 Helical (SST)	6
29	NS-015-01	Nut 1/4-20 Hex (SST)	6
30	00-328065	Actuator - Lift Drain	2
31	NS-031-21	Stop Nut 1/4-20 Hex (SST)	4
32	00-290160	Magnet	2
33	00-290159	Retainer - Magnet	2
34	NS-031-50	Stop Nut 6-32 Hex (SST)	4
35	00-892896	Kit - Service Reed Switch	2
36	00-270996	Insulator - Switch	2
37	NS-031-50	Stop Nut 6-32 Hex (SST)	4
38	00-328064-00007	Door (26-1/8)	1
39	00-328079-00007	Door (32-1/8)	1
40	00-271100	Bucket - Strainer	2
41	00-435941	Strainer - Front (RH)	1
42	00-436034	Strainer - Rear (RH) (Not Shown)	1
43	00-435943	Strainer - Front (LH)	1
44	00-435939	Strainer - Rear (LH) (Not Shown)	1
45	00-289082	Kit - Plug (Incls. 30 Plugs & RTV)	AR

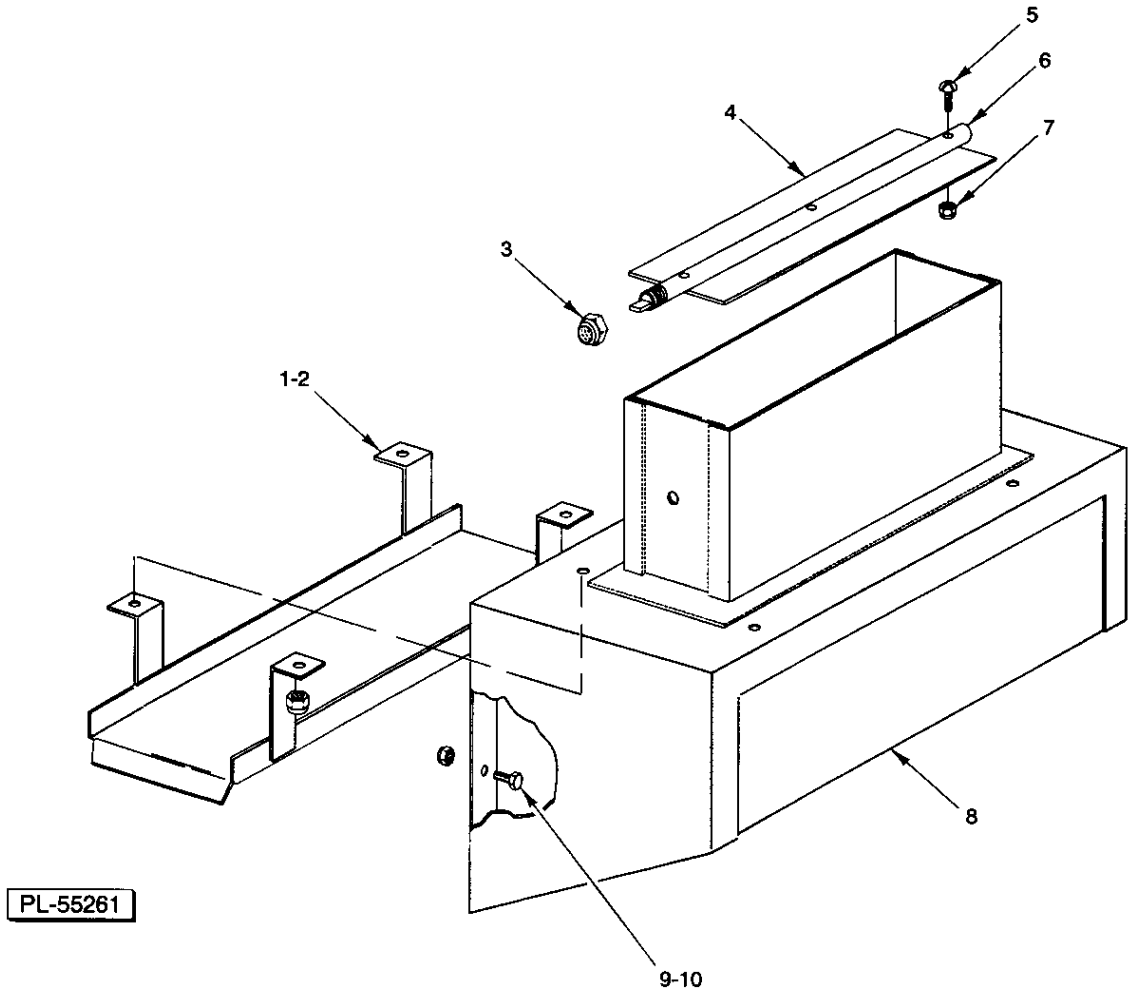

VENT HOOD

VENT HOOD

ILLUS. PL-55261	PART NO.	NAME OF PART	AMT.
1	00-435799	Drip Shield Assy	1
2	NS-031-15	Stop Nut 10-24 Hex (SST)	4
3	NS-036-12	Stop Nut 3 /8 -24 "Elastic"	1
4	00-75623	Damper - Vent Stack	1
5	SC-125-25	Mach Screw 6-32 x 3/4 Rd Hd (SST)	3
6	00-064919	Shaft - Damper	1
7	NS-031-50	Stop Nut 6-32 Hex (SST)	3
8	00-435794-1	Vent Hood Assy (Incls Items 1 thru 7)	1
9	SC-041-05	Cap Screw 1/4 -20 x 5/8 Hex Hd	11
10	NS-031-19	Stop Nut 1/4 -20 "Elastic"(SST)	11

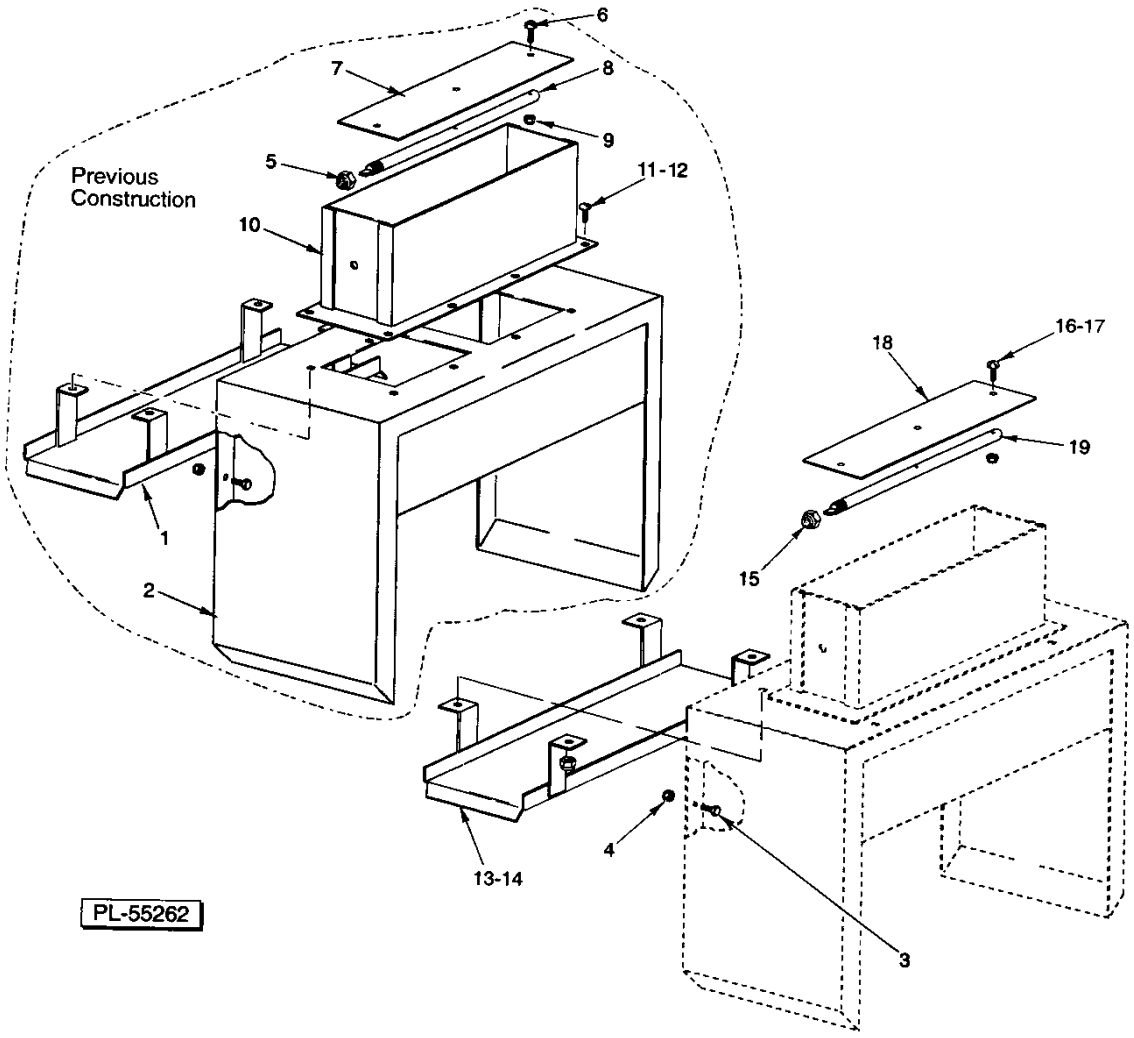

EXTENDED HOOD

EXTENDED HOOD

ILLUS. PL-55262	PART NO.	NAME OF PART	AMT.
1	00-080553	Drip Shield Assy	1
2	00-079463-2	Extended Hood Assy	1
3	SC-041-05	Cap Screw 1/4 -20 x 5/8 Hex Hd	13
4	NS-031-19	Stop Nut 1/4 -20 "Elastic" (SST)	13
5	NS-036-12	Stop Nut 3/8 -24 "Elastic"	1
6	SC-125-25	Mach Screw 6-32 x 3/4 Rd Hd (SST)	3
7	00-075623	Damper - Vent Stack	1
8	00-064919	Shaft - Damper	1
9	NS-031-50	Stop Nut 6-32 Hex (SST)	3
10	00-075621	Vent Stack Assy	1
11	SC-053-02	Mach Screw 10-24 x 1/2 Truss Hd (SST)	8
12	NS-031-15	Stop Nut 10-24 "Elastic" (SST)	8
13	00-435799	Drip Shield Assy	1
14	NS-031-15	Stop Nut 10-24 Hex (SST)	4
15	NS-036-12	Stop Nut 3 /8 -24 "Elastic"	1
16	SC-125-25	Mach Screw 6-32 x 3/4 Rd Hd (SST)	3
17	NS-031-50	Stop Nut 6-32 Hex (SST)	3
18	00-075623	Damper - Vent Stack	1
19	00-064919	Shaft - Damper	1

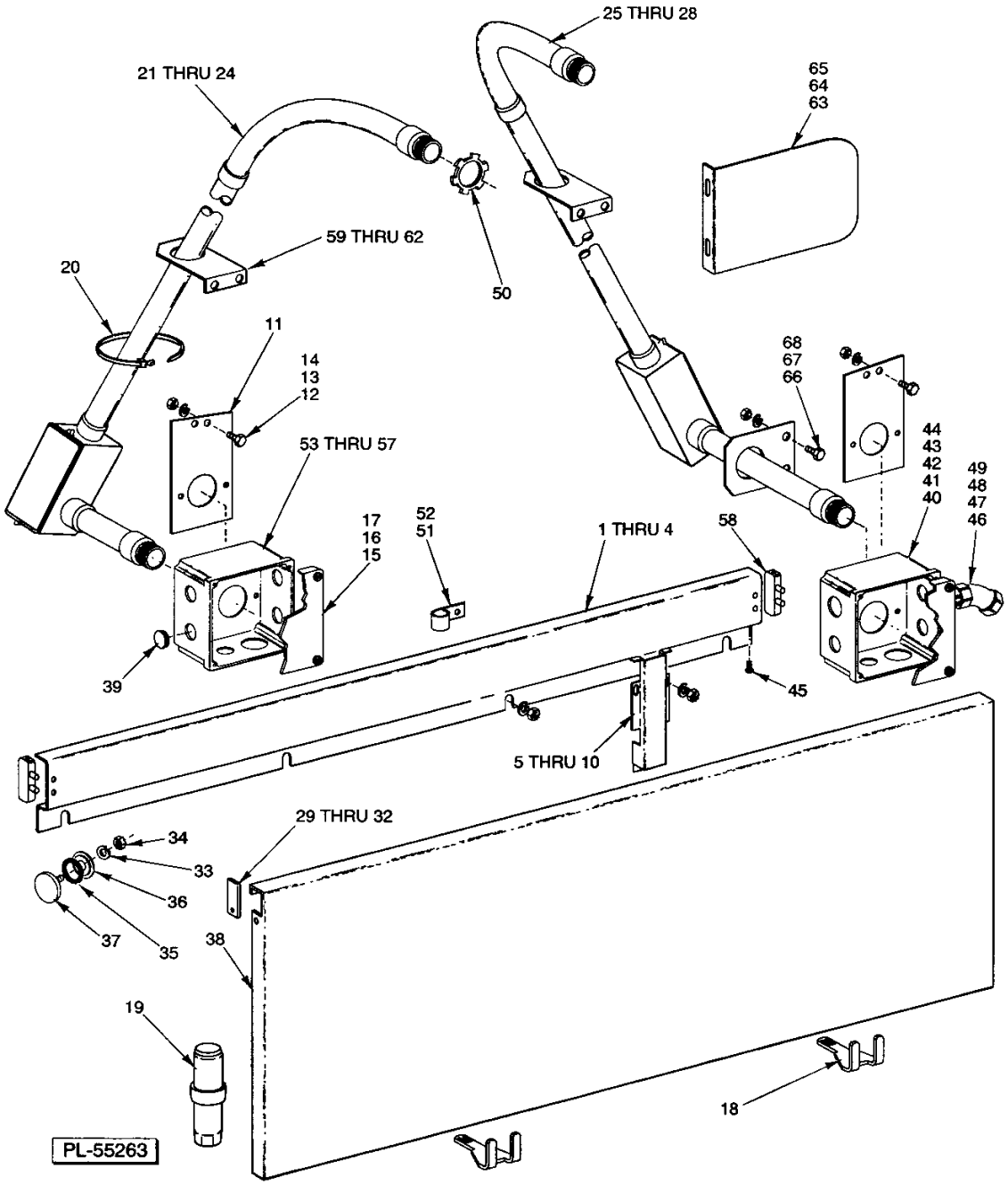

MISCELLANEOUS
(WASH/RINSE SECTION)

MISCELLANEOUS
(WASH/RINSE SECTION)

ILLUS. PL-55263	PART NO.	NAME OF PART	AMT.
1	00-436032	Wireway - Horizontal	1
2	WS-017-06	Washer (SST)	4
3	WL-006-17	Lockwasher 1/4 Helical (SST)	4
4	NS-015-01	Nut 1/4 -20 Hex (SST)	4
5	00-271055	Wireway - Vertical	1
6	SC-021-22	Mach Screw 10-24 x 3/8 Rd Hd (SST)	1
7	WL-006-07	Lockwasher #10 Helical (SST)	1
8	WS-017-06	Washer (SST)	2
9	WL-006-17	Lockwasher 1/4 Helical (SST)	2
10	NS-015-01	Nut 1/4 -20 Hex (SST)	2
11	00-436024	Plate - Junction Box Support	2
12	SC-041-11	Cap Screw 5/16 -18 x 3/4 Hex Hd (SST)	4
13	WL-006-23	Lockwasher 5/16 Helical (SST)	4
14	NS-015-11	Nut 5/16 -18 Hex	4
15	00-288465	Lid & Gasket Assy (Incls Item 16)	2
16	00-112007	Gasket	2
17	SD-012-20	Self-Tapping Screw 8-32 x 1/2 Phil Truss Hd, Type T	8
18	00-271061	Support	2
19	00-288946-2	Foot - Adjustable	4
20	00-122577-2	Wire Tie	6
21	00-436941	Conduit - PVC (26 1/8 Door Height) (LH) (Electric and Steam Heat)	1
22	00-437131	Conduit - PVC (32 1/8 Door Height) (LH) (Electric and Steam Heat)	1
23	00-328470-1	Conduit - PVC (26 1/8 Door Height) (LH) (Gas Heat)	1
24	00-328470-2	Conduit - PVC (32 1/8 Door Height) (LH) (Gas Heat)	1
25	00-436037	Conduit - PVC (26 1/8 Door Height) (RH) (Electric and Steam Heat)	1
26	00-437130	Conduit - PVC (32 1/8 Door Height) (RH) (Electric and Steam Heat)	1
27	00-328469-1	Conduit - PVC (26 1/8 Door Height) (RH) (Gas Heat)	1
28	00-328469-2	Conduit - PVC (32 1/8 Door Height) (RH) (Gas Heat)	1
29	00-436888	Cover - Panel Notch	2
30	SC-053-05	Mach Screw 10-24 x 3/8 Truss Hd, Slotted	2
31	WS-019-06	Washer (SST)	2
32	NS-031-16	Stop Nut 10-24 "Elastic" (SST)	2
33	WL-006-17	Lockwasher 1/4 Helical (SST)	2
34	NS-015-01	Nut 1/4 -20 Hex (SST)	2
35	00-067500-31	"O" Ring	2
36	00-119254	Retainer - Cap	2
37	00-119244	Cap & Stud Assy	2
38	00-436031	Panel - Front Trim	1
39	PB-004-08	Plug Button Heyco 2703	AR
40	00-270923-4	Box - Junction (RH)	1
41	SC-041-05	Cap Screw 1/4 -20 x 5/8 Hex Hd	2
42	WS-003-49	Washer 0.266 x 0.563 x 0.062 (SST)	2
43	WL-006-17	Lockwasher 1/4 Helical (SST)	2
44	NS-015-01	Nut 1/4 -20 Hex (SST)	2
45	SD-007-38	Self-Tapping Screw 8-18 x 1/4 Phil. Bndg. Hd., Type B	2
46	FE-008-44	Connector 45 Deg (3/4 Male Thd x 3/4 Thinwall)	1
47	FE-008-11	Gasket - Electrical	1
48	FE-006-06	Lock Nut 3/4	1
49	FE-007-32	Connector - Conduit 3/4 TS	1
50	FE-009-07	Lock Nut 1 1/4	4
51	00-294677-3	Clamp - Wire (3/4 ID)	AR
52	NS-047-94	Lock Nut Special 3/16	AR
53	00-270923-5	Box - Junction (LH)	1
54	SC-041-05	Cap Screw 1/4 -20 x 5/8 Hex Hd	2
55	WS-003-49	Washer 0.266 x 0.563 x 0.062 (SST)	2

MISCELLANEOUS
(WASH/RINSE SECTION)

ILLUS. PL-55263	PART NO.	NAME OF PART	AMT.
56	WL-006-17	Lockwasher 1/4 Helical (SST)	2
57	NS-015-01	Nut 1/4 -20 Hex (SST)	2
58	00-271057	NLA - Obsolete--Cap - Wireway	2
59	SC-041-50	Cap Screw 1/4 -20 x 1/2 Hex Hd	4
60	WS-022-01	Washer (SST)	4
61	WL-006-17	Lockwasher 1/4 Helical (SST)	4
62	NS-015-01	Nut 1/4 -20 Hex (SST)	4
63	00-287625	Splash Shield	2
64	NS-031-15	Stop Nut 10-24 Hex (SST)	4
65	SC-053-02	Mach Screw 10-24 x 1/2 Truss Hd (SST)	4
66	SC-041-11	Cap Screw 5/16 -18 x 3/4 Hex Hd (SST)	2
67	WL-006-23	Lockwasher 5/16 Helical (SST)	2
68	NS-015-11	Nut 5/16 -18 Hex	2

NOTES

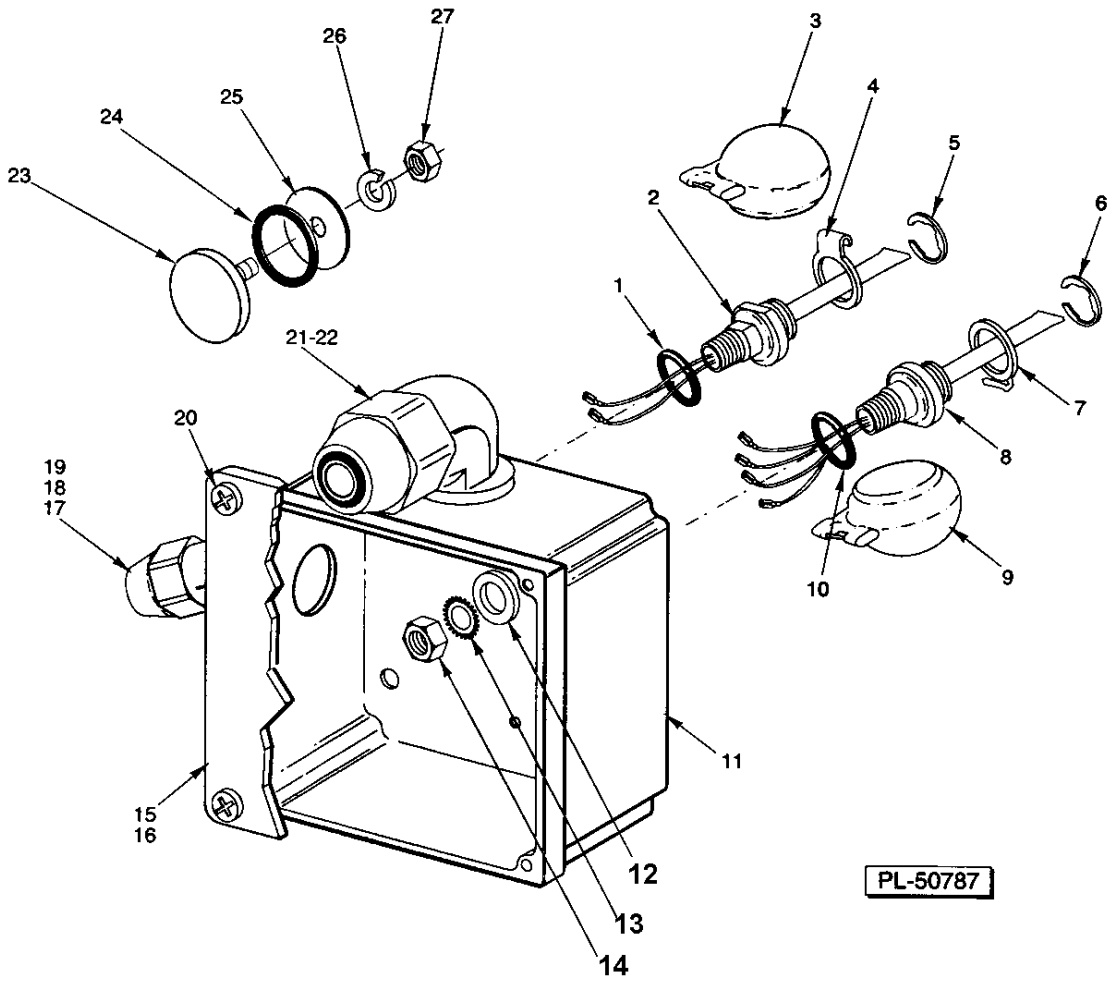

LOW WATER PROTECTION
(STEAM HEAT/WASH & RINSE TANK)

LOW WATER PROTECTION
(STEAM HEAT/WASH & RINSE TANK)

ILLUS. PL-50787	PART NO.	NAME OF PART	AMT.
1	00-067500-72	"O" Ring	AR
2	00-271622	Probe & Switch Assy (2 Wire) (Water Level)	AR
3	00-122674	Float Assy	AR
4	00-112467	Retainer - Float	AR
5	RR-010-13	Retaining Ring	AR
6	RR-010-13	Retaining Ring	2
7	00-112467	Retainer - Float	2
8	00-271621	Probe & Switch Assy (4 Wire) (Temperature & Water Level)	2
9	00-122674	Float Assy	2
10	00-067500-72	"O" Ring	2
11	00-328472	Box - Steam Heat	2
12	WS-010-40	Washer - Thrust	AR
13	WL-014-31	Lockwasher 1/2 External Shakeproof (SST)	AR
14	NS-018-28	Jam Nut 1/2 -20 Hex Fin	AR
15	00-288465	Lid & Gasket Assy (Incls Item 16)	2
16	00-112007	Gasket	2
17	FE-024-61	Connector 45 Deg (Non Metallic) "Sealtite"(1/2 Male Thd x 1/2 Flex Cnd)	2
18	FE-024-61	Connector 45 Deg (Non Metallic) "Sealtite"(1/2 Male Thd x 1/2 Flex Cnd)	1
19	FE-024-65	Connector 90 Deg (Non Metallic) "Sealtite"(1/2 Male Thd x 1/2 Flex Cnd)	1
20	SD-012-20	Self-Tapping Screw 8-32 x 1/2 Phil Truss Hd, Type T	8
21	FE-024-67	Connector 90 Deg (Non Metallic) "Sealtite" (1 Male Thd x 1 Flex Cnd)	4
22	FE-008-12	Gasket	2
*23	00-119244-2	Cap	AR
*24	00-067500-31	"O" Ring	AR
*25	WS-003-47	Washer (SST)	AR
*26	WL-006-17	Lockwasher 1/4 Helical (SST)	AR
*27	NS-015-01	Nut 1/4 -20 Hex (SST)	AR
	00-294357-1	Connector	AR
	00-294357-2	Connector (Black)	AR
	00-065890-29	Connector - Insulated	AR

* Use 1 set on CRS86A or CPW100A in place #1 thru 5 in wash tank & 1 set in rinse tank on all units.

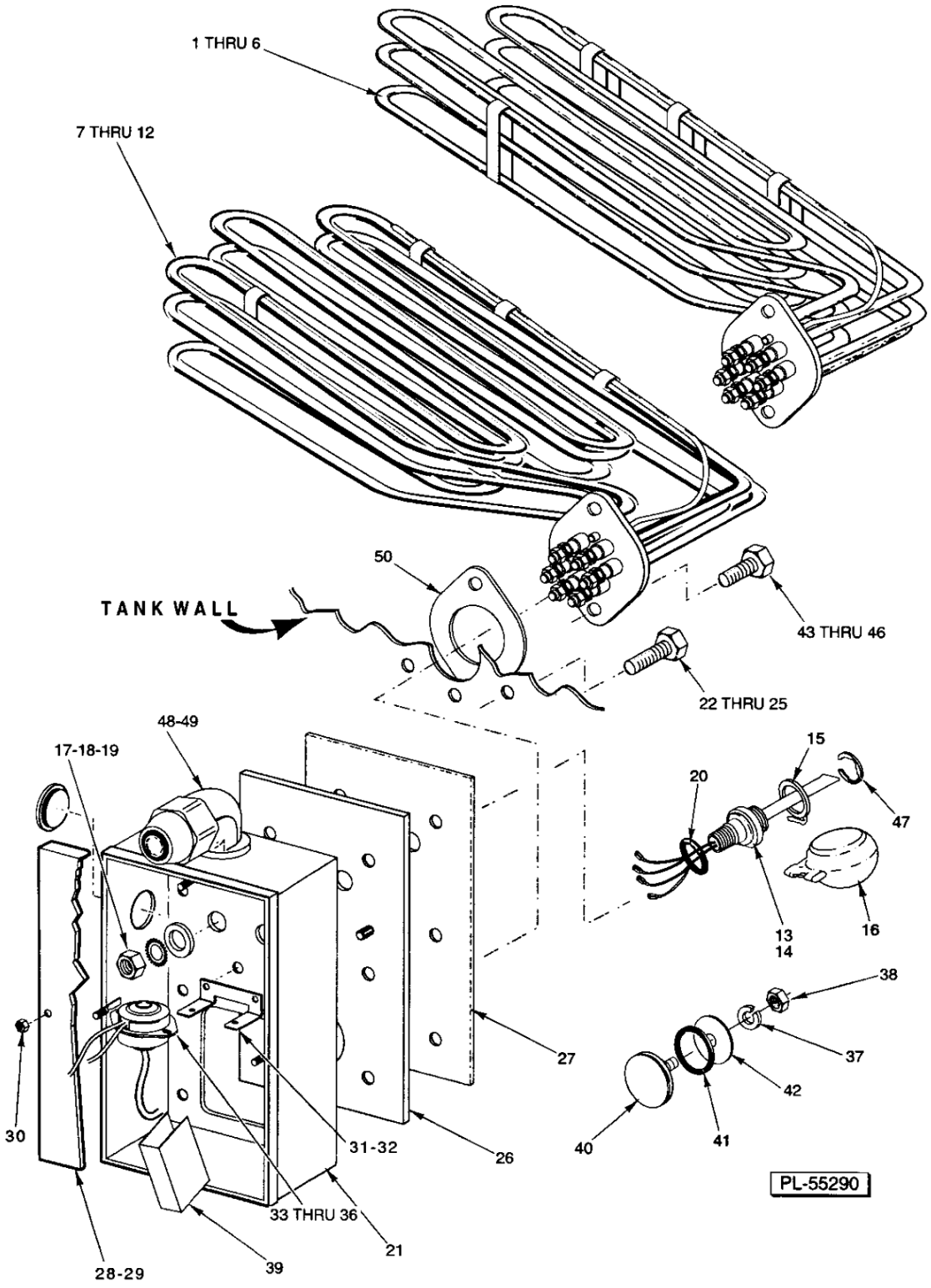

ELECTRIC HEAT

ELECTRIC HEAT

ILLUS. PL-55290	PART NO.	NAME OF PART	AMT.
1	00-436907-1	Heater - Tank Electric (10K W/Rinse) (208 V., 60 Hz./200 V., 50 Hz.) (3 Ph.)	1
2	00-436907-2	Heater - Tank Electric (10K W/Rinse) (240 V., 50/60 Hz.) (3 Ph.)	1
3	00-436907-3	Heater - Tank Electric (10K W/Rinse) (208 V., 60 Hz./200 V., 50 Hz.) (1 Ph.)	1
4	00-436907-4	Heater - Tank Electric (10K W/Rinse) (240 V., 50/60 Hz.) (1 Ph.)	1
5	00-436907-5	Heater - Tank Electric (10K W/Rinse) (480 V., 60 Hz.) (3 Ph.)	1
6	00-436907-6	Heater - Tank Electric (10K W/Rinse) (380 V., 50 Hz.) (3 Ph.)	1
7	00-435990-1	Heater - Tank Electric (15K W/Wash) (208 V., 60 Hz./200 V., 50 Hz.) (3 Ph.)	1
8	00-435990-2	Heater - Tank Electric (15K W/Wash) (240 V., 50/60 Hz.) (3 Ph.)	1
9	00-435990-3	Heater - Tank Electric (15K W/Wash) (208 V., 60 Hz./200 V., 50 Hz.) (1 Ph.)	1
10	00-435990-4	Heater - Tank Electric (15K W/Wash) (240 V., 50/60 Hz.) (1 Ph.)	1
11	00-435990-5	Heater - Tank Electric (15K W/Wash) (480 V., 60 Hz.) (3 Ph.)	1
12	00-435990-6	Heater - Tank Electric (15K W/Wash) (380 V., 50 Hz.) (3 Ph.)	1
13	00-271621	Switch & Probe Assy. (4-Wire) (Long)	2
14	00-271622	Probe & Switch Assy. (2 Wire) (Water Level)	AR
15	00-112467	Retainer- Float	AR
16	00-122674	Float Assy	AR
17	WS-010-40	Washer - Thrust	AR
18	WL-014-31	Lockwasher 1/2 External Shakeproof (SST)	AR
19	NS-018-28	Jam Nut 1/2 -20 Hex Fin	AR
20	00-067500-72	"O" Ring	AR
21	00-474512-3	Box - Electric Heat	2
22	SC-041-15	Cap Screw 5/16 -18 x 1 1/4 Hex Hd	12
23	WS-029-05	Washer 0.328 x 0.750 x 0.062 (SST)	24
24	WL-006-23	Lockwasher 5/16 Helical (SST)	12
25	NS-015-11	Nut 5/16 -18 Hex	12
26	00-271118-1	Plate - Mounting	2
27	00-271109	Gasket - Mounting	2
28	00-474574-2	Lid & Gasket Assy. (Incls. Item 29)	2
29	00-474569	Gasket (Lid)	2
30	NS-031-15	Stop Nut 10-24 Hex (SST)	12
31	00-0271122	Bracket - Thermostat	2
32	NS-031-15	Stop Nut 10-24 Hex (SST)	4
33	00-293946	Sleeve	2
34	00-271123	Protector - High Limit	2
35	SC-021-08	Mach. Screw 6-32 x 3/8 Slotted Rd. Hd. (SST)	4
36	NS-031-50	Stop Nut 6-32 Hex (SST)	4
*37	WL-006-17	Lockwasher 1/4 Helical (SST)	AR
*38	NS-015-01	Nut 1/4 -20 Hex (SST)	AR
39	00-950696	Insulator - Terminal (Above 250 V.)	2
*40	00-119244-2	Cap	AR
*41	00-067500-31	"O" Ring	AR
*42	WS-003-47	Washer (SST)	AR
43	SC-041-13	Cap Screw 5/16 -18 x 1 Hex Hd. (SST)	4
44	WS-017-08	Washer (0.328 x 0.625 x 0.062) (SST)	4
45	WL-006-23	Lockwasher 5/16 Helical (SST)	4
46	NS-015-11	Nut 5/16 -18 Hex	4
47	RR-010-13	Retaining Ring	AR
48	FE-008-12	Gasket	2
49	FE-024-63	Connector 90 Deg. (Non Metallic) "Sealtite" (1 Male Thd. x 1 Flex. Cnd.)	4
50	00-293598	Gasket - Heater Mounting	2
	00-526454	Foam Tape	AR
	00-545595	Sealer (1/8 Rd.)	AR
	00-294357-1	Connector	AR
	00-294357-2	Connector (Black)	AR
	00-065890-29	Connector - Insulated	2

* Uses 1 set on CRS86A or CPW100A in place of #14 in wash tank & 1 set in rinse tank on all units.

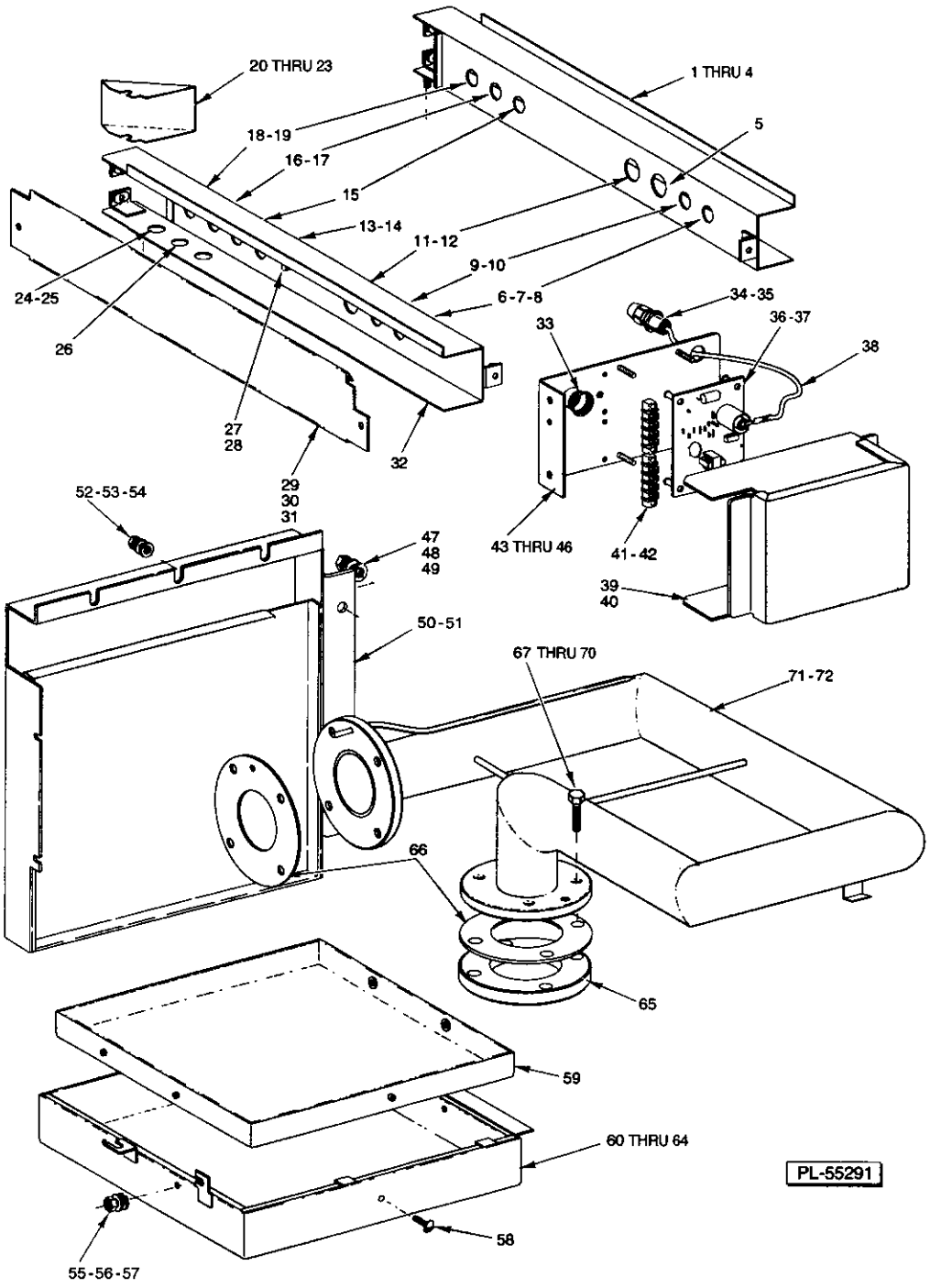

GAS HEAT BURNERS, FLUES, & WIREWAYS

GAS HEAT BURNERS, FLUES, & WIREWAYS

ILLUS. PL-55291	PART NO.	NAME OF PART	AMT.
1	00-328461	Channel - Wireway (RH)	1
2	SC-041-10	Cap Screw 5/16-18 x 5/8 Hex Hd	2
3	SC-041-11	Cap Screw 5/16-18 x 3/4 Hex Hd (SST)	4
4	WL-006-23	Lockwasher 5/16 Helical (SST)	6
5	FE-024-58	Connector Straight (Non Metallic) "Sealtite" (3/4 Male Thd x 3/4 Flex Cnd)	2
6	FE-024-57	Connector Straight (Non Metallic) "Sealtite" (1/2 Male Thd x 1/2 Flex Cnd)	2
7	FE-024-61	Connector 45 Deg (Non Metallic) "Sealtite" (1/2 Male Thd x 1/2 Flex Cnd)	2
8	FE-008-10	1/2 Gasket Assy	2
9	FE-024-57	Connector Straight (Non Metallic) "Sealtite" (1/2 Male Thd x 1/2 Flex Cnd)	AR
10	FE-024-65	Connector 90 Deg (Non Metallic) "Sealtite" (1/2 Male Thd x 1/2 Flex Cnd)	AR
11	FE-024-62	Connector - Conduit 3/4 (Non Metallic) "Sealtite"	2
12	FE-024-58	Connector Straight (Non Metallic) "Sealtite" (3/4 Male Thd x 3/4 Flex Cnd)	2
13	FE-024-57	Connector Straight (Non Metallic) "Sealtite" (1/2 Male Thd x 1/2 Flex Cnd)	1
14	FE-024-61	Connector 45 Deg (Non Metallic) "Sealtite" (1/2 Male Thd x 1/2 Flex Cnd)	1
15	FE-024-61	Connector 45 Deg (Non Metallic) "Sealtite" (1/2 Male Thd x 1/2 Flex Cnd)	4
16	FE-024-57	Connector Straight (Non Metallic) "Sealtite" (1/2 Male Thd x 1/2 Flex Cnd)	2
17	FE-024-61	Connector 45 Deg (Non Metallic) "Sealtite" (1/2 Male Thd x 1/2 Flex Cnd)	2
18	FE-024-57	Connector Straight (Non Metallic) "Sealtite" (1/2 Male Thd x 1/2 Flex Cnd)	2
19	FE-024-61	Connector 45 Deg (Non Metallic) "Sealtite" (1/2 Male Thd x 1/2 Flex Cnd)	2
20	00-328437	Cover - Wireway	2
21	WS-003-49	Washer 0.266 x 0.563 x 0.062 (SST)	2
22	WL-006-17	Lockwasher 1/4 Helical (SST)	2
23	NS-015-01	Nut 1/4 -20 Hex (SST)	2
24	FE-024-57	Connector Straight (Non Metallic) "Sealtite" (1/2 Male Thd x 1/2 Flex Cnd)	1
25	FE-024-65	Connector 90 Deg (Non Metallic) "Sealtite" (1/2 Male Thd x 1/2 Flex Cnd)	1
26	PB-004-08	Plug Button Heyco 2703	AR
27	WL-014-10	Lockwasher 1/4 External Shakeproof	1
28	NS-031-21	Stop Nut - Special 1/4 -20 Hex	1
29	00-328452-1	Cover - Wireway Channel (LH)	1
30	00-328452-2	Cover - Wireway Channel (RH)	1
31	SC-053-05	Mach Screw 10-24 x 3/8 Truss Hd, Slotted	4
32	00-328464	Channel - Wireway (LH)	1
33	FE-024-75	Bushing - Electrical Snap (1)	2
34	FE-024-57	Connector Straight (Non Metallic) "Sealtite" (1/2 Male Thd x 1/2 Flex Cnd)	2
35	FE-024-61	Connector 45 Deg (Non Metallic) "Sealtite" (1/2 Male Thd x 1/2 Flex Cnd)	2
36	00-436853	Ignitor Board 24 VAC	2
37	NS-031-50	Stop Nut 6-32 Hex (SST)	8
38	00-271146-2	Cable - High Voltage	2
39	00-328459	Cover - Ignitor Board	2
40	SC-053-05	Mach Screw 10-24 x 3/8 Truss Hd, Slotted	2
41	00-294325-014-1	Block - Terminal	4
42	SC-021-15	Mach Screw 8-32 x 1/2 Rd Hd, Slotted	8
43	00-328462-1	Bracket - Ignitor Board (LH)	1
44	00-328462-2	Bracket - Ignitor Board (RH)	1
45	SC-041-11	Cap Screw 5/16 -18 x 3/4 Hex Hd (SST)	4
46	WL-006-23	Lockwasher 5/16 Helical (SST)	4
47	WS-017-01	Washer 0.328 x 0.875 x 0.062 (SST)	2
48	WL-006-23	Lockwasher 5/16 Helical (SST)	2
49	NS-015-11	Nut 5/16 -18 Hex	2
50	00-328455-1	Flue (LH)	1
51	00-328455-2	Flue (RH)	1
52	WS-003-49	Washer 0.266 x 0.563 x 0.062 (SST)	10
53	WL-006-17	Lockwasher 1/4 Helical (SST)	10
54	NS-015-01	Nut 1/4 -20 Hex (SST)	10
55	WS-003-49	Washer 0.266 x 0.563 x 0.062 (SST)	4

GAS HEAT BURNERS, FLUES, & WIREWAYS

ILLUS. PL-55291	PART NO.	NAME OF PART	AMT.
56	WL-006-17	Lockwasher 1/4 Helical (SST)	4
57	NS-015-01	Nut 1/4 -20 Hex (SST)	4
58	SC-053-02	Mach Screw 10-24 x 1/2 Truss Hd (SST)	10
59	00-328415	Liner - Shroud	2
60	00-328416	Insulation	2
61	00-328453-1	Shroud (LH)	1
62	00-328453-2	Shroud (RH)	1
63	00-328454-1	Shroud Assy (LH) (Incls Items 58, 59, 60, & 61)	1
64	00-328454-2	Shroud Assy (RH) (Incls Items 48, 59, 60, & 62)	1
65	00-435952	Flange - Immersion Tube	2
66	00-436100	Gasket	4
67	SC-121-43	Cap Screw 7/16 -14 x 1 3/4 Hex Hd	16
68	WS-021-07	Washer (SST)	32
69	WL-019-77	Lockwasher 7/16 Medium (SST)	16
70	NS-047-97	Nut 7/16 -14 Hex	16
71	00-328460-1	Tube - Immersion (LH)	1
72	00-328460-2	Tube - Immersion (RH)	1

NOTES

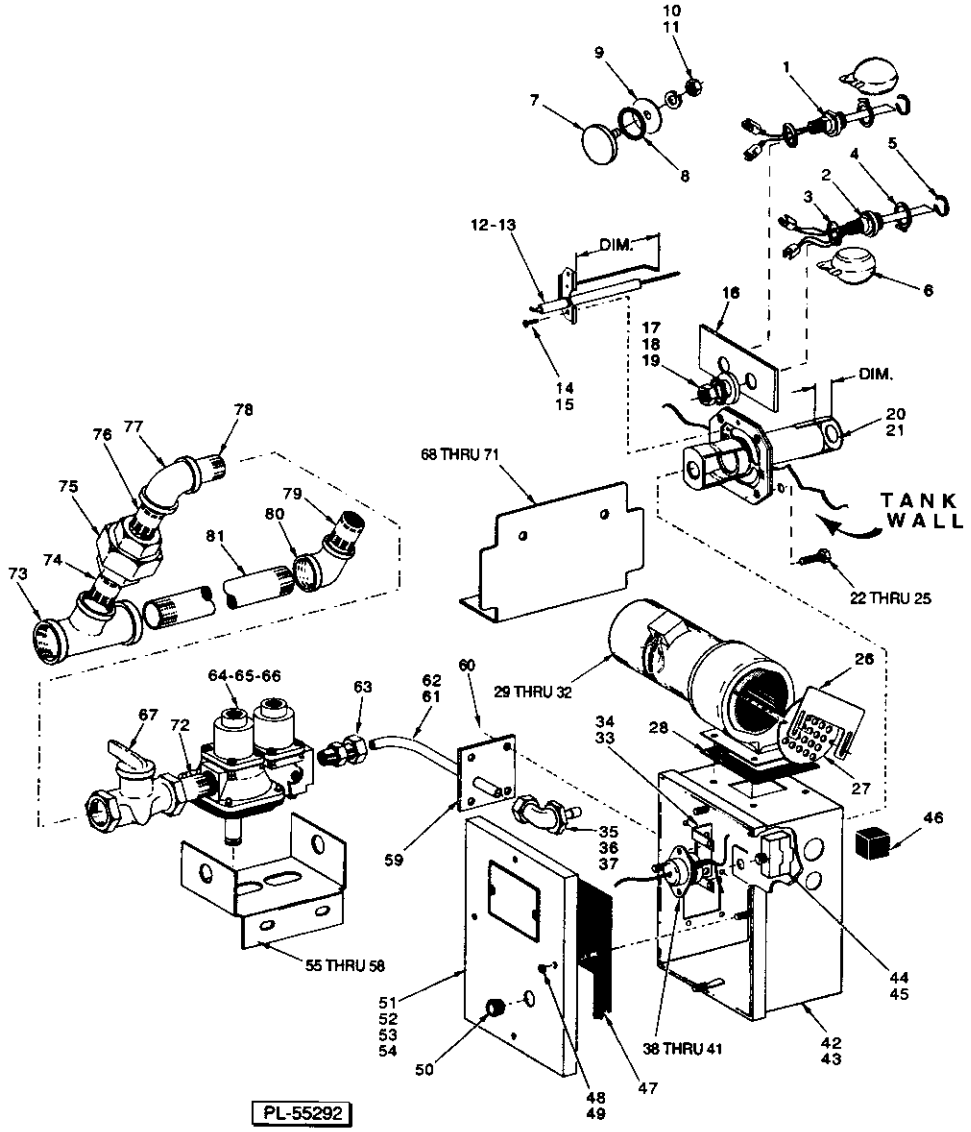

GAS HEAT COMPONENTS

GAS HEAT COMPONENTS

ILLUS. PL-55292	PART NO.	NAME OF PART	AMT.
1	00-328495	Probe & Switch Assy(2 Wire)(Water Level)(Order 2 Jumper Wires # 328758)	AR
2	00-271621	Switch & Probe Assy. (4-Wire) (Long)	2
3	00-067500-72	"O" Ring	AR
4	00-112467	Retainer - Float	AR
5	RR-010-13	Retaining Ring	AR
6	00-122674	Float Assy	AR
*7	00-119244-2	Cap	AR
*8	00-067500-31	"O" Ring	AR
*9	WS-003-47	Washer (SST)	AR
*10	WL-006-17	Lockwasher 1/4 Helical (SST)	AR
*11	NS-015-01	Nut 1/4-20 Hex (SST)	AR
12	00-436792	Electrode Ignition - Natural Gas (Dim. 3 1/8) (Marked 665)	2
13	00-436067	Electrode Ignition - L.P. Gas (Dim. 3 3/8) (Marked 662)	2
14	SC-093-03	Mach. Screw 8-32 x 3/8 Slotted Pan Hd. (SST)	4
15	WL-014-05	Lockwasher #8 External Shakeproof (SST)	4
16	00-435960-1	Plate Spacer	2
17	NS-018-28	Jam Nut 1/2-20 Hex (SST)	AR
18	WL-014-31	Lockwasher 1/2 External Shakeproof (SST)	AR
19	WS-010-40	Washer - Thrust	AR
20	00-328649	Bracket - Orifice (Nat. Gas) (Shown) (Dim. 1/2) (Marked NAT)	2
21	00-436761	Bracket - Orifice (L.P. Gas) (Dim. 1/2) (Marked LP)	2
22	SC-121-43	Cap Screw 7/16 -14 x 1 3/4 Hex Hd	16
23	WS-021-07	Washer (SST)	32
24	WL-019-77	Lockwasher 7/16 Medium (SST)	16
25	NS-047-97	Nut 7/16 -14 Hex	16
26	00-328428	Plate - Adjusting	2
27	00-328427	Plate - Restrictor	2
28	00-328473	Gasket - Blower	2
29	00-328476-1	Blower - Motor	2
30	SC-041-05	Cap Screw 1/4-20 x 5/8 Hex Hd	8
31	WL-014-10	Lockwasher 1/4 External Shakeproof	2
32	NS-031-21	Stop Nut - Special 1/4 -20 Hex	8
33	00-271122-2	Bracket - Thermostat	2
34	SC-053-05	Mach. Screw 10-24 x 3/8 Slotted Truss Hd. (SST)	8
35	00-435701-3	Angle Fitting (Nat. Gas, 60 Hz.) #25 Drill (0.1495)	2
36	00-435701-4	Angle Fitting (Nat. Gas, 50 Hz.) #29 Drill (0.136)	2
37	00-435701-2	Angle Fitting (L.P. Gas 50/60 Hz.) #43 Drill (0.089)	2
38	00-271123	Protector - High Limit	2
39	00-293946	Sleeve - Lead	2
40	SC-127-26	Mach. Screw 6-32 x 3/8 Phil. Rd. Hd. (SST)	4
41	NS-031-50	Stop Nut 6-32 Hex (SST)	4
42	00-328465	Box - Gas Heat (LH)	1
43	00-328466	Box - Gas Heat (RH)	1
44	00-087711-153-1	Switch - Limit	2
45	00-328508	Insulator - Switch	2
46	00-328450	Plug - Rubber (Conduit)	8
47	00-328429	Gasket - Lid	2
48	WS-019-06	Washer (SST)	8
49	NS-031-16	Stop Nut 10-24 "Elastic" (SST)	8
50	00-435024	Eye	2
51	00-328467-1	Lid - Gas Heat Box (Nat. Gas, 60 Hz.)	2
52	00-328467-2	Lid - Gas Heat Box (Nat. Gas, 50 Hz.)	2
53	00-328467-3	Lid - Gas Heat Box (L.P. Gas, 60 Hz.)	2
54	00-328467-4	Lid - Gas Heat Box (L.P. Gas, 50 Hz.)	2
55	00-328212	Bracket - Valve	2

GAS HEAT COMPONENTS

ILLUS. PL-55292	PART NO.	NAME OF PART	AMT.
56	SC-041-10	Cap Screw 5/16-18 x 5/8 Hex Hd. (SST)	4
57	WL-006-23	Lockwasher 5/16 Helical (SST)	4
58	NS-015-11	Nut 5/16 -18 Hex	4
59	00-328440	Plate - Gas Line	2
60	SC-053-05	Mach. Screw 10-24 x 3/8 Slotted Truss Hd. (SST)	8
61	00-328425-2	Tube - Gas (LH Tank)	1
62	00-328425	Tube - Gas (RH Tank)	1
63	00-435702	Connector - Special	2
64	00-328426-1	Gas Valve (Nat. Gas)	2
65	00-328426-2	Gas Valve (L.P. Gas, 60 Hz.)	2
66	00-328426-3	Gas Valve (L.P. Gas, 50 Hz.)	2
67	00-291988-3	Valve - Gas Cock	2
68	00-328421	Deflector - Flue	2
69	WS-003-49	Washer 0.266 x 0.563 x 0.062 (SST)	4
70	WL-006-17	Lockwasher 1/4 Helical (SST)	4
71	NS-015-01	Nut 1/4 -20 Hex (SST)	4
72	FP-035-94	Pipe 1/2 x 1 1/2 Lg. TBE	2
73	FP-019-33	Tee 3/4 x 3/4 x 1/2 Reducing	1
74	FP-059-61	Pipe 1/2 x 1-1/4 TBE	1
75	FP-022-11	Union - Pipe	2
76	FP-059-61	Pipe 1/2 x 1-1/4 TBE	2
77	FP-013-15	Elbow - Pipe 1/2 x 90 Deg	2
78	FP-059-61	Pipe 1/2 x 1-1/4 TBE	2
79	FP-059-61	Pipe 1/2 x 1-1/4 TBE	1
80	FP-078-89	Elbow 3/4 NPT x 1/2 Reducing	1
81	FP-087-27	Nipple 3/4 x 61 TBE	1
	00-294357-1	Connector	2
	00-294357-2	Connector (Black)	2
	00-435538	Wire Harness - Ignitor Board	2
	00-328758	Jumper Wire - Socket Type Connector (Use With Item 39)	2

* Use 1 set on CCS,CRS86A/W or CPW100A/W in place of #1 in wash tank & 1 set in rinse tank on all units.

NOTES

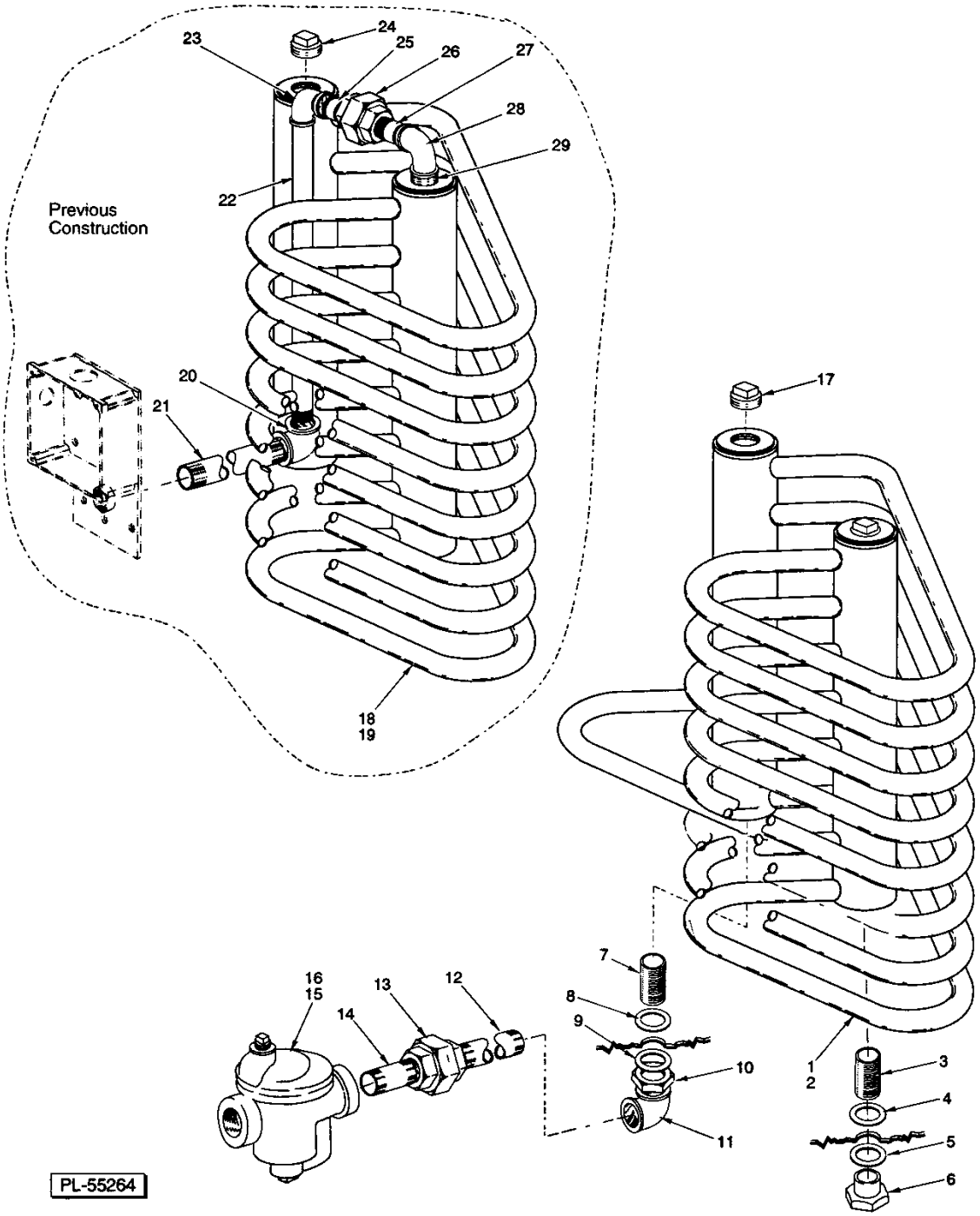

STEAM COILS
(2 UNITS REQD)

STEAM COILS
(2 UNITS REQD)

ILLUS. PL-55264	PART NO.	NAME OF PART	AMT.
1	00-328823-1	Coil - Steam (LH Tank) (Shown)	1
2	00-328823-2	Coil - Steam (RH Tank)	1
3	FP-080-17	Pipe 3/4 x 2 TBE (1-1/2 RTOE) (SST)	1
4	WS-013-45	Washer (SST)	1
5	WS-013-45	Washer (SST)	1
6	FP-053-09	Lock Nut 3/4 NPSL Pipe (SST)	1
7	FP-080-17	Pipe 3/4 x 2 TBE (1-1/2 RTOE) (SST)	1
8	WS-013-45	Washer (SST)	1
9	WS-013-45	Washer (SST)	1
10	FP-053-09	Lock Nut 3/4 NPSL Pipe (SST)	1
11	FP-013-22	Elbow 3/4 x 90 Deg	1
12	FP-059-64	Nipple 3/4 x 5 1/2 TBE	1
13	FP-022-17	Union 3/4 (Grd Seat)	1
14	FP-036-92	Nipple 3/4 x 1 3/8 TBE	1
15	00-118316	Steam Trap (0-20 PSI)	1
16	00-118317	Steam Trap (21-50 PSI)	1
17	FP-052-09	Pipe Plug 3/4 Sq Hd (SST)	1
18	00-437158-1	NLA - Obsolete--Coil - Steam (LH Tank) (Shown)	1
19	00-437158-2	Coil - Steam (RH Tank)	1
20	FP-049-15	Elbow 3/4 x 90 Deg (SST)	1
21	FP-054-44	Nipple 3/4 x 2 1/2 TBE (SST)	1
22	FP-087-11	Nipple 3/4 x 9 1/2 TBE (SST)	1
23	FP-049-15	Elbow 3/4 x 90 Deg (SST)	1
24	FP-052-09	Pipe Plug 3/4 Sq Hd (SST)	1
25	FP-054-27	Nipple 3/4 x 1 3/8 TBE (SST)	1
26	FP-050-14	Union 3/4 (Grd Seat) (SST)	1
27	FP-054-27	Nipple 3/4 x 1 3/8 TBE (SST)	1
28	FP-049-15	Elbow 3/4 x 90 Deg (SST)	1
29	FP-054-27	Nipple 3/4 x 1 3/8 TBE (SST)	1

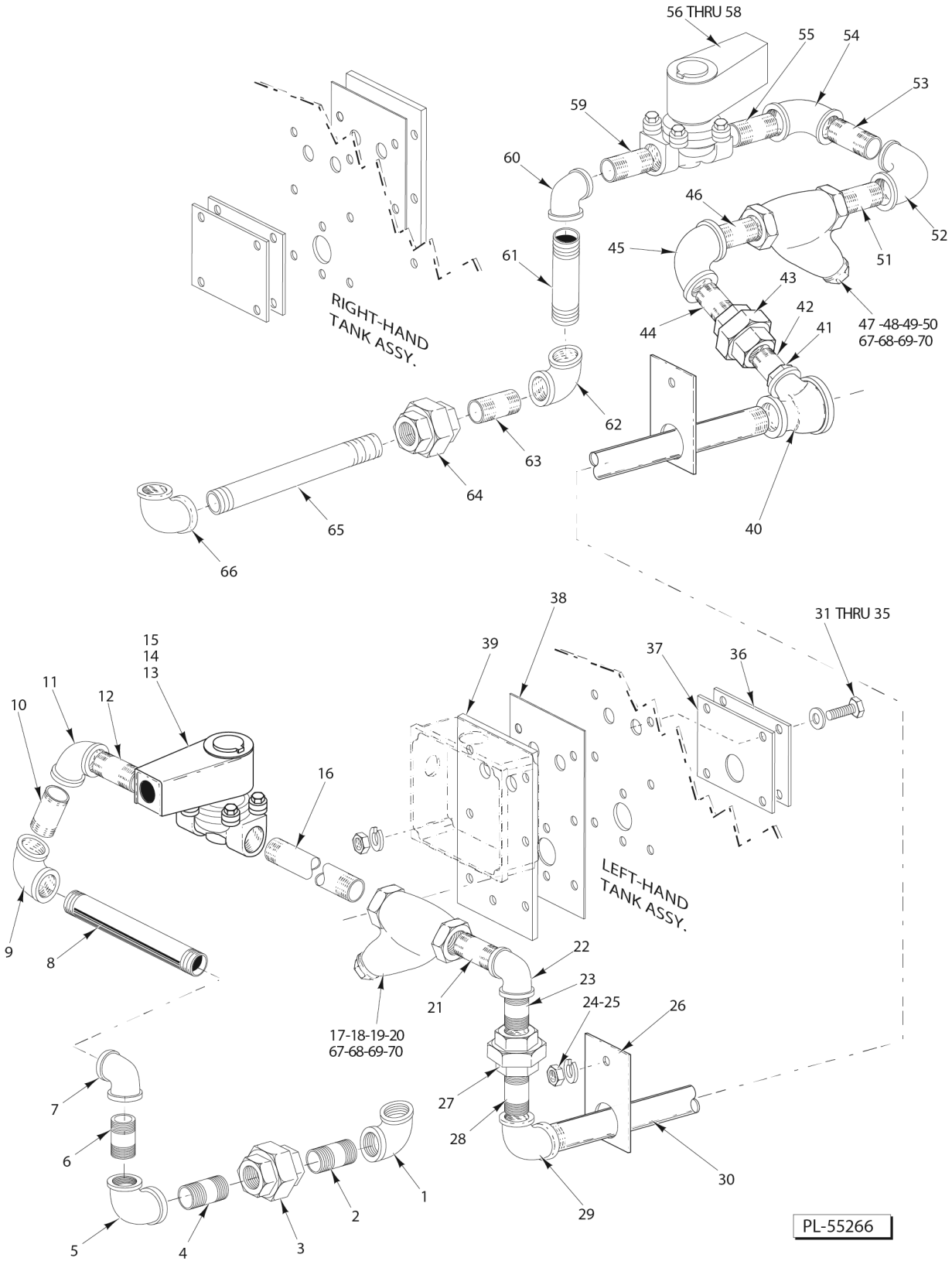

STEAM COIL PIPING

STEAM COIL PIPING

ILLUS. PL-55266	PART NO.	NAME OF PART	AMT.
1	FP-013-22	Elbow 3/4 x 90 Deg.	1
2	FP-036-12	Nipple 3/4 x 7 3/4 TBE.	1
3	FP-022-17	Union 3/4 (Grd Seat).	1
4	FP-036-05	Nipple 3/4 x 3 TBE.	1
5	FP-013-22	Elbow 3/4 x 90 Deg.	1
6	FP-036-03	Nipple 3/4 x 2 3/4 TBE.	1
7	FP-013-22	Elbow 3/4 x 90 Deg.	1
8	FP-080-81	Nipple 3/4 x 8 1/4 TBE.	1
9	FP-013-22	Elbow 3/4 x 90 Deg.	1
10	FP-036-05	Nipple 3/4 x 3 TBE.	1
11	FP-013-22	Elbow 3/4 x 90 Deg.	1
12	FP-036-92	Nipple 3/4 x 1 3/8 TBE.	1
13	00-270329-1	Solenoid Valve (120 V) (Incls Items 14 & 15).	1
14	00-270318-1	Coil - Solenoid Valve (120 V).	1
15	00-270336	Service Kit - Solenoid Valve.	1
16	FP-059-64	Nipple 3/4 x 5 1/2 TBE.	1
*17	00-186922	Strainer - Line (3/4 In.) (Brass) (Kitz) (Incls Items 18, 19, & 20) (Alternate to Item 67)	1
18	00-186923	Plug - Branch.	1
19	00-186924	Gasket - Branch Plug.	1
20	00-186925	Screen - Line Strainer.	1
21	FP-036-92	Nipple 3/4 x 1 3/8 TBE.	1
22	FP-013-22	Elbow 3/4 x 90 Deg.	1
23	FP-036-05	Nipple 3/4 x 3 TBE.	1
24	WL-006-17	Lockwasher 1/4 Helical (SST).	2
25	NS-015-01	Nut 1/4 -20 Hex (SST).	2
26	00-289783	Bracket - Pipe Support.	2
27	FP-022-17	Union 3/4 (Grd Seat).	1
28	FP-036-95	Pipe 3/4 x 2 TBE.	1
29	FP-079-97	Elbow - Reducing 90 Deg 1 to 3/4.	1
30	FP-075-90	Pipe 1 x 39-1/2 TBE.	1
31	SC-041-15	Cap Screw 5/16-18 x 1 1/4 Hex Hd.	14
32	WS-017-08	Washer (0.328 x 0.625 x 0.062) (SST).	28
33	WL-006-23	Lockwasher 5/16 Helical (SST).	14
34	NS-015-11	Nut 5/16-18 Hex (SST).	14
35	00-545595	Sealer (1/8 Rd).	AR
36	00-328777	Plate - Inner.	2
37	00-435026	Gasket.	2
38	00-271109	Gasket - Mounting.	2
39	00-328776	Plate - Outer.	2
40	FP-019-76	Tee - Pipe 1 1/2 x 1 x 1.	1
41	FP-026-26	Bushing 1 to 3/4 .	1
42	FP-036-92	Nipple 3/4 x 1 3/8 TBE.	1
43	FP-022-17	Union 3/4 (Grd Seat).	1
44	FP-036-92	Nipple 3/4 x 1 3/8 TBE.	1
45	FP-013-22	Elbow 3/4 x 90 Deg.	1
46	FP-036-92	Nipple 3/4 x 1 3/8 TBE.	1
*47	00-186922	Strainer - Line (3/4 In.) (Brass) (Kitz) (Incls Items 48, 49, & 50) (Alternate to Item 67)	1
48	00-186923	Plug - Branch.	1
49	00-186924	Gasket - Branch Plug.	1
50	00-186925	Screen - Line Strainer.	1
51	FP-036-92	Nipple 3/4 x 1 3/8 TBE.	1
52	FP-013-22	Elbow 3/4 x 90 Deg.	1
53	FP-036-92	Nipple 3/4 x 1 3/8 TBE.	1
54	FP-013-22	Elbow 3/4 x 90 Deg.	1
55	FP-036-92	Nipple 3/4 x 1 3/8 TBE.	1

STEAM COIL PIPING

ILLUS. PL-55266	PART NO.	NAME OF PART	AMT.
56	00-270329-1	Solenoid Valve (120 V) (Incls Items 57 & 58)	1
57	00-270318-1	Coil - Solenoid Valve (120 V)	1
58	00-270336	Service Kit - Solenoid Valve	1
59	FP-036-92	Nipple 3/4 x 1 3/8 TBE	1
60	FP-013-22	Elbow 3/4 x 90 Deg	1
61	FP-078-38	Nipple 3/4 x 3 3/4 TBE	1
62	FP-013-22	Elbow 3/4 x 90 Deg	1
63	FP-036-05	Nipple 3/4 x 3 TBE	1
64	FP-022-17	Union 3/4 (Grd Seat)	1
65	FP-036-12	Nipple 3/4 x 7 3/4 TBE	1
66	FP-013-22	Elbow 3/4 x 90 Deg	1
*67	00-186922	Strainer - Line (3/4 In.) (Brass) (Brass) (Apollo / Conbraco) (Incls. Items 68, 69, & 70) (Alternate to Item 47)	1
68	00-749802-00001	Cap	1
69	00-749802-00002	Gasket	1
70	00-749802-00003	Screen (80 Mesh)	1

* Kitz line strainer is approx. 1/4" shorter than Apollo / Conbraco.

NOTES

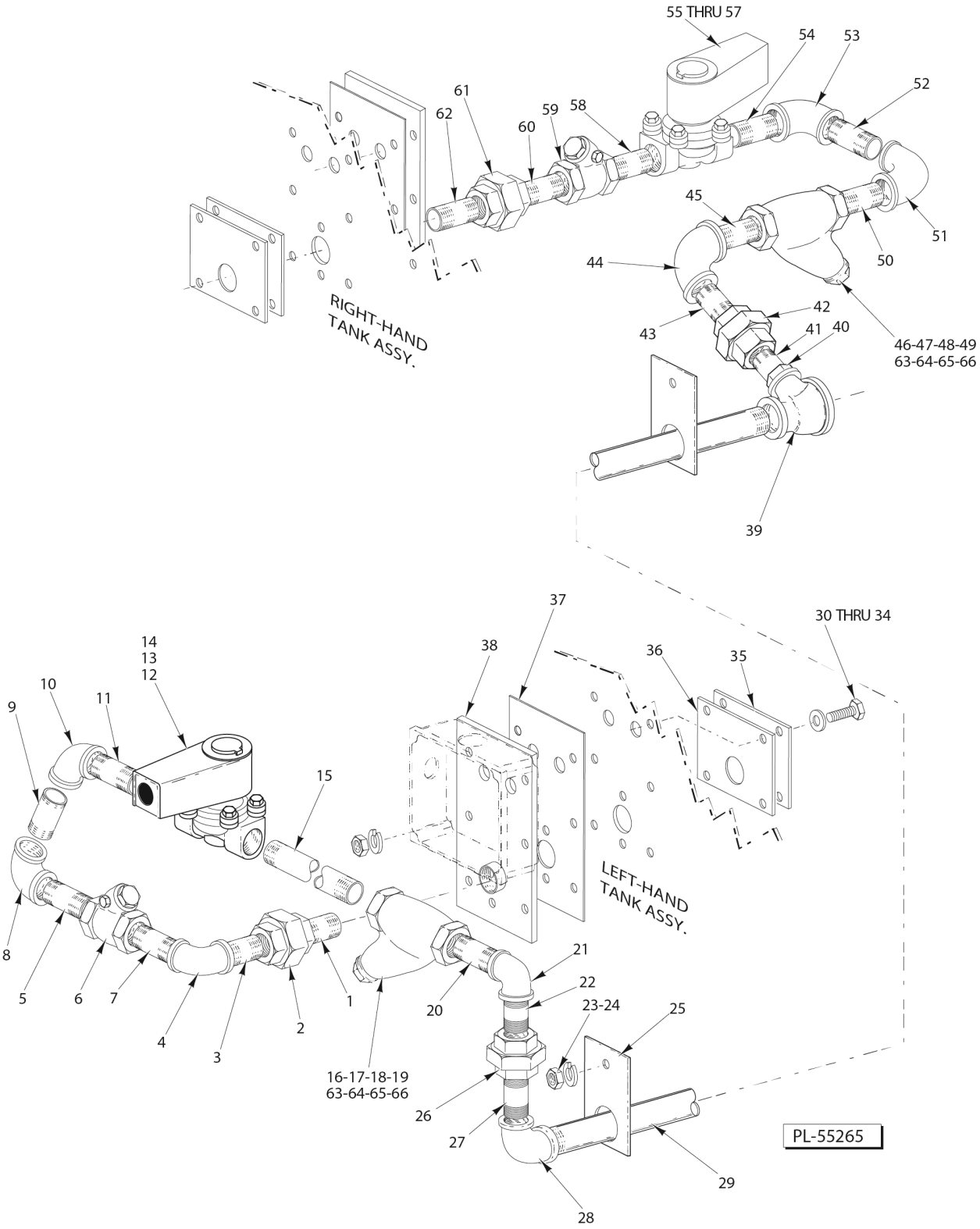

STEAM INJECTOR & PREVIOUS CONSTRUCTION STEAM COIL PIPING

STEAM INJECTOR & PREVIOUS CONSTRUCTION STEAM COIL PIPING

ILLUS. PL-55265	PART NO.	NAME OF PART	AMT.
1	FP-036-92	Nipple 3/4 x 1 3/8 TBE	1
2	FP-022-17	Union 3/4 (Grd Seat)	1
3	FP-036-92	Nipple 3/4 x 1 3/8 TBE	1
4	FP-013-22	Elbow 3/4 x 90 Deg	1
5	FP-036-92	Nipple 3/4 x 1 3/8 TBE	1
6	00-074696	Check Valve (3/4)	1
7	FP-036-95	Pipe 3/4 x 2 TBE	1
8	FP-013-22	Elbow 3/4 x 90 Deg	1
9	FP-036-92	Nipple 3/4 x 1 3/8 TBE	1
10	FP-013-22	Elbow 3/4 x 90 Deg	1
11	FP-036-92	Nipple 3/4 x 1 3/8 TBE	1
12	00-270329-1	Solenoid Valve (120 V) (Incls Items 13 & 14)	1
13	00-270318-1	Coil - Solenoid Valve (120 V)	1
14	00-70336	Service Kit - Solenoid Valve	1
15	FP-059-64	Nipple 3/4 x 5 1/2 TBE	1
*16	00-186922	Strainer - Line (3/4 In.) (Brass) (Kitz) (Incls Items 17, 18, & 19) (Alternate to Item 63)	1
17	00-186923	Plug - Branch	1
18	00-186924	Gasket - Branch Plug	1
19	00-86925	Screen - Line Strainer	1
20	FP-036-92	Nipple 3/4 x 1 3/8 TBE	1
21	FP-013-22	Elbow 3/4 x 90 Deg	1
22	FP-036-92	Nipple 3/4 x 1 3/8 TBE	1
23	WL-006-17	Lockwasher 1/4 Helical (SST)	2
24	NS-015-01	Nut 1/4 -20 Hex (SST)	2
25	00-289783	Bracket - Pipe Support	2
26	FP-022-17	Union 3/4 (Grd Seat)	1
27	FP-036-95	Pipe 3/4 x 2 TBE	1
28	FP-079-97	Elbow - Reducing 90 Deg 1 to 3/4	1
29	FP-075-90	Pipe 1 x 39-1/2 TBE	1
30	SC-041-15	Cap Screw 5/16 -18 x 1 1/4 Hex Hd	14
31	WS-017-08	Washer (0.328 x 0.625 x 0.062) (SST)	28
32	WL-006-23	Lockwasher 5/16 Helical (SST)	14
33	NS-015-11	Nut 5/16 -18 Hex	14
34	00-545595	Sealer	AR
35	00-435027	Plate	2
36	00-435026	Gasket	2
37	00-271109	Gasket - Mounting	2
38	00-271108	Plate - Mounting	2
39	FP-019-76	Tee-Pipe 1 1/2 x 1 x 1	1
40	FP-026-26	Bushing 1 to 3/4	1
41	FP-036-92	Nipple 3/4 x 1 3/8 TBE	1
42	FP-022-17	Union 3/4 (Grd Seat)	1
43	FP-036-92	Nipple 3/4 x 1 3/8 TBE	1
44	FP-013-22	Elbow 3/4 x 90 Deg	1
45	FP-036-92	Nipple 3/4 x 1 3/8 TBE	1
46	00-186922	Strainer - Line (3/4 In.) (Brass) (Kitz) (Incls Items 47, 48, & 49) (Alternate to Item 63)	1
47	00-186923	Plug - Branch	1
48	00-186924	Gasket - Branch Plug	1
49	00-186925	Screen - Line Strainer	1
50	FP-036-92	Nipple 3/4 x 1 3/8 TBE	1
51	FP-013-22	Elbow 3/4 x 90 Deg	1
52	FP-036-92	Nipple 3/4 x 1 3/8 TBE	1
53	FP-013-22	Elbow 3/4 x 90 Deg	1
54	FP-036-92	Nipple 3/4 x 1 3/8 TBE	1
55	00-270329-1	Solenoid Valve (120 V) (Incls Items 56 & 57)	1

STEAM INJECTOR & PREVIOUS CONSTRUCTION STEAM COIL PIPING

ILLUS. PL-55265	PART NO.	NAME OF PART	AMT.
56	00-270318-1	Coil - Solenoid Valve (120 V)	1
57	00-270336	Service Kit - Solenoid Valve	1
58	FP-036-92	Nipple 3/4 x 1 3/8 TBE	1
59	00-074696	Check Valve (3/4)	1
60	FP-036-92	Nipple 3/4 x 1 3/8 TBE	1
61	FP-022-17	Union 3/4 (Grd Seat)	1
62	FP-036-92	Nipple 3/4 x 1 3/8 TBE	1
*63	00-186922	Strainer - Line (3/4 In.) (Brass) (Apollo / Conbraco) (Incls. Items 64, 65, & 66) (Alternate to Items 16 & 46)	1
64	00-749802-00001	Cap	1
65	00-749802-00002	Gasket	1
66	00-749802-00003	Screen (80 Mesh)	1

* Kitz line strainer is approx. 1/4" shorter than Apollo / Conbraco.

NOTES

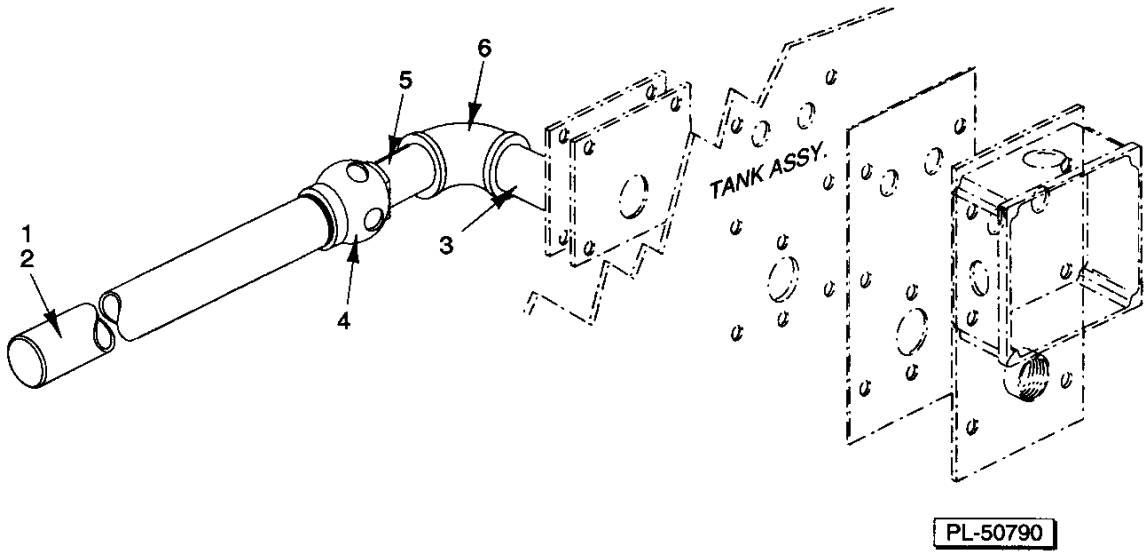

STEAM INJECTOR HEAT
(2 UNITS REQUIRED)

STEAM INJECTOR HEAT
(2 UNITS REQUIRED)

ILLUS. PL-50790	PART NO.	NAME OF PART	AMT.
1	00-271110	Piping - Steam Injector (Incls. Items 2, 4, & 5)	1
2	FP-085-05	Nipple 1 x 10 1/2 STOE (SST)	1
3	FP-080-22	Nipple 3 /4 x 6 1/4 Lg. (TBE) (SST)	1
4	00-288671	Silent Water Heater Assy	1
5	FP-054-44	Nipple 3/4 x 2 1/2 (TBE) (SST)	1
6	FP-049-15	Elbow 3/4 x 90 Deg. (SST)	1
	00-546292	Sealer - Pipe	AR
	00-545595	Sealer (1/8 Rd)	AR

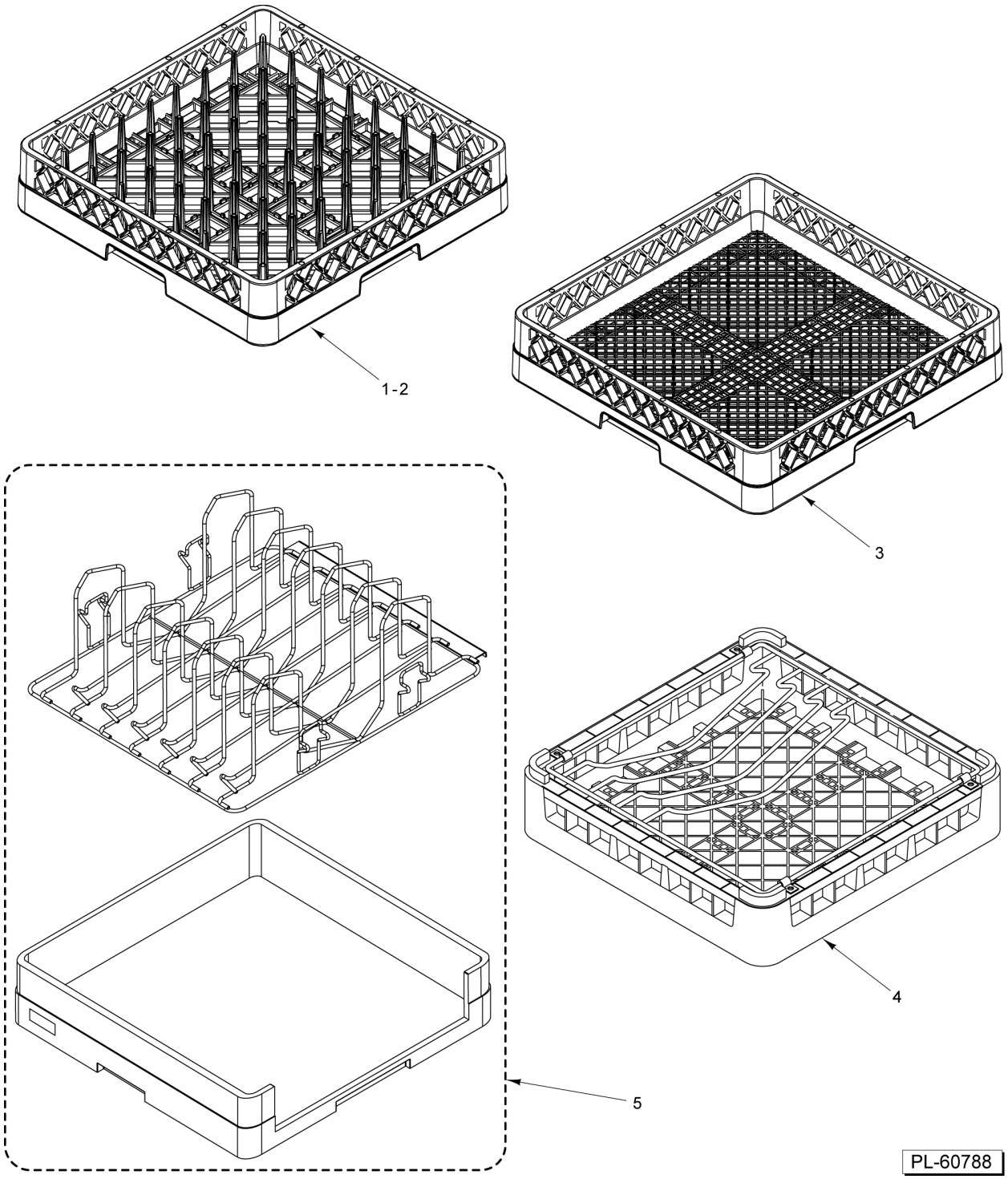

DISH RACKS

DISH RACKS

ILLUS. PL-60788	PART NO.	NAME OF PART	AMT.
1	00-315191	Rack - Peg (Packaged) (Shown)	1
2	00-295288	Peg Type Tray Rack (Packaged) (Open End) (Not Shown)	1
3	00-315193	Rack - Combination (Packaged)	1
4	00-892671	Rack - Bun Pan (Packaged)	1
5	00-936838-00009	Rack (6-Pan) (Packaged)	1

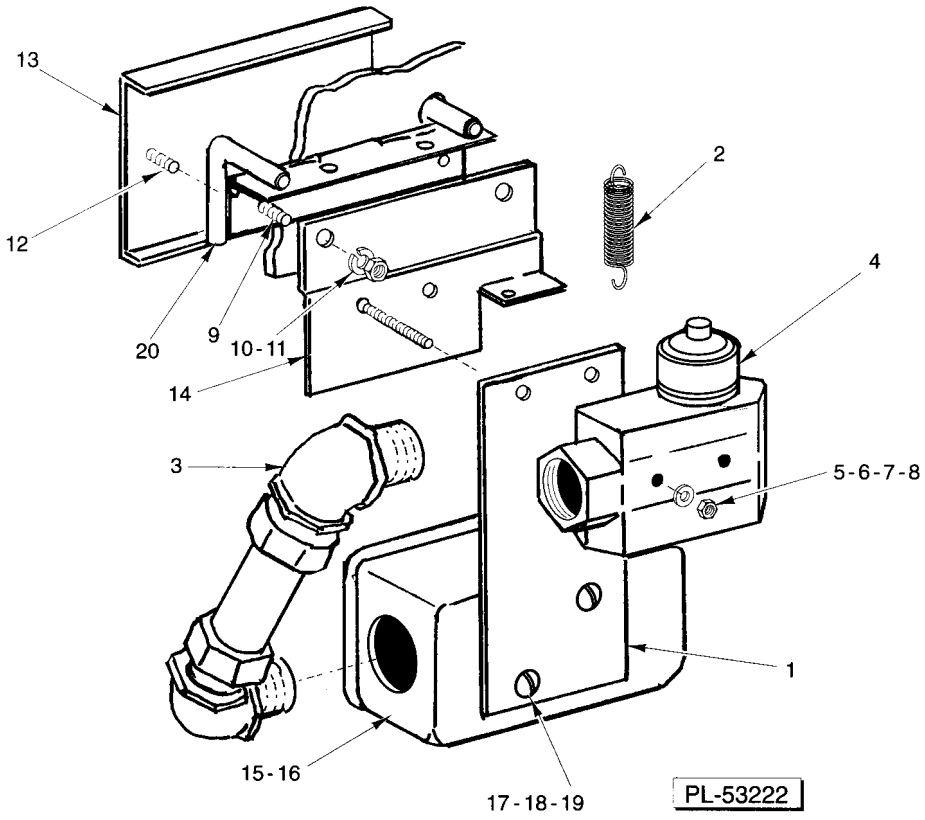

TABLE LIMIT SWITCH

TABLE LIMIT SWITCH

ILLUS. PL-53222	PART NO.	NAME OF PART	AMT.
1	00-277559	Bracket	1
2	00-064165-00003	Spring - Connection	1
3	FE-006-37	Elbow 90 Deg.Short (1/2 Male Thd. x 1/2 Thinwall)	2
4	00-087711-060-1	Switch - Interlock	1
5	SC-027-24	Mach. Screw 6-32 x 1-1/2 Slotted Rd. Hd. (Brass)	2
6	WS-002-06	Washer (Brass)	2
7	NS-010-06	Nut 6-32 Hex (Brass)	2
8	WL-014-03	Lockwasher 6 External Shakeproof	2
9	00-081921	Mach. Screw 10-24 x 1/2 Trimmed Hex Hd	2
10	WS-023-06	Washer	2
11	WL-006-06	Lockwasher 10 Light	2
12	SC-053-02	Mach. Screw 10-24 x 1/2 Truss Hd. SST	2
13	087326	Plate - Actuator	1
14	00-812936	Bracket - Interlock Switch	1
15	FE-004-24	Cover - Junction Box	1
16	FE-003-19	Box - Junction	1
17	SC-066-06	Mach. Screw 10-24 x 1/2 Phil. Truss Hd. (SST)	2
18	WL-006-06	Lockwasher 10 Light	2
19	NS-011-18	Mach. Nut 10-24 Hex SST	2
20	087332	Hinge Assy	1
	078752-4	Retainer (7/16")	1
	ML-103368-0000Z	Table Limit Switch Assembly (Incls items 1 thru 20)	1