CATALOG OF REPLACEMENT PARTS



C88A & C88W SERIES DISHWASHERS

A product of HOBART 701 S. RIDGE AVENUE TROY, OHIO 45374-0001

FORM 18867 Rev. C (May 2023)

 © HOBART 2023

Table of Contents

5 CONTROL BOX
7 COMPONENT PANEL (120 V. PILOT CIRCUIT)
11 WASH MOTOR AND PUMP UNITS (2 UNITS REQUIRED)
13 CONVEYOR DRIVE UNIT (PREVIOUS CONSTRUCTION)
17 CONVEYOR MOTOR/CLUTCH ASSEMBLY (CURRENT CONSTRUCTION)
19 CONVEYOR DRIVE MOTOR (CURRENT CONSTRUCTION)
21 TRACK AND CRADLE (WASH/RINSE SECTION)
23 WASH ARMS AND TUBES - WASH/RINSE SECTION (2 UNITS REQUIRED)
25 FILL PIPING (PREVIOUS CONSTRUCTION)
29 FILL PIPING (CURRENT CONSTRUCTION)
33 RINSE PIPING - C88A SERIES
37 ACTUATOR MECHANISM AND RINSE DRAIN-OFF PAN
39 DRAIN UNIT (WASH/RINSE SECTION)
41 DOORS, CURTAINS, BAFFLES, AND STRAINERS
43 VENT HOOD
45 EXTENDED HOOD
47 MISCELLANEOUS (WASH/RINSE SECTION)
51 LOW WATER PROTECTION (STEAM HEAT/WASH & RINSE TANK) (2 UNITS REQ'D)
53 STEAM COIL HEAT (2 UNITS REQUIRED)
55 STEAM HEAT PIPING (2 UNITS REQUIRED)
59 STEAM INJECTOR HEAT (2 UNITS REQUIRED)
61 CONTROL BOX - GAS HEAT (2 UNITS REQUIRED)
65 BLOWER AND CONTROL BOX (CURRENT CONSTRUCTION) (NATURAL GAS ONLY)
67 GAS VALVE (CURRENT CONSTRUCTION) (NATURAL GAS ONLY)
69 IMMERSION TUBE (CURRENT CONSTRUCTION)
71 IGNITION MODULE (CURRENT CONSTRUCTION)
73 GAS BURNER & FLUE(2 UNITS REQ'D) (L.P. & PREVIOUS NATURAL GAS CONSTRUCTION)
75 GAS HEAT COMPONENTS(2 UNITS REQ'D) (L.P. & PREVIOUS NATURAL GAS CONSTRUCTION)
77 COMMON GAS HEAT PIPING (L.P. & PREVIOUS NATURAL GAS CONSTRUCTION)
79 COMMON GAS HEAT PIPING (CURRENT CONSTRUCTION) (NATURAL GAS ONLY)
81 ELECTRIC HEAT (2 UNITS REQUIRED)
83 DISH RACKS
85 TABLE LIMIT SWITCH

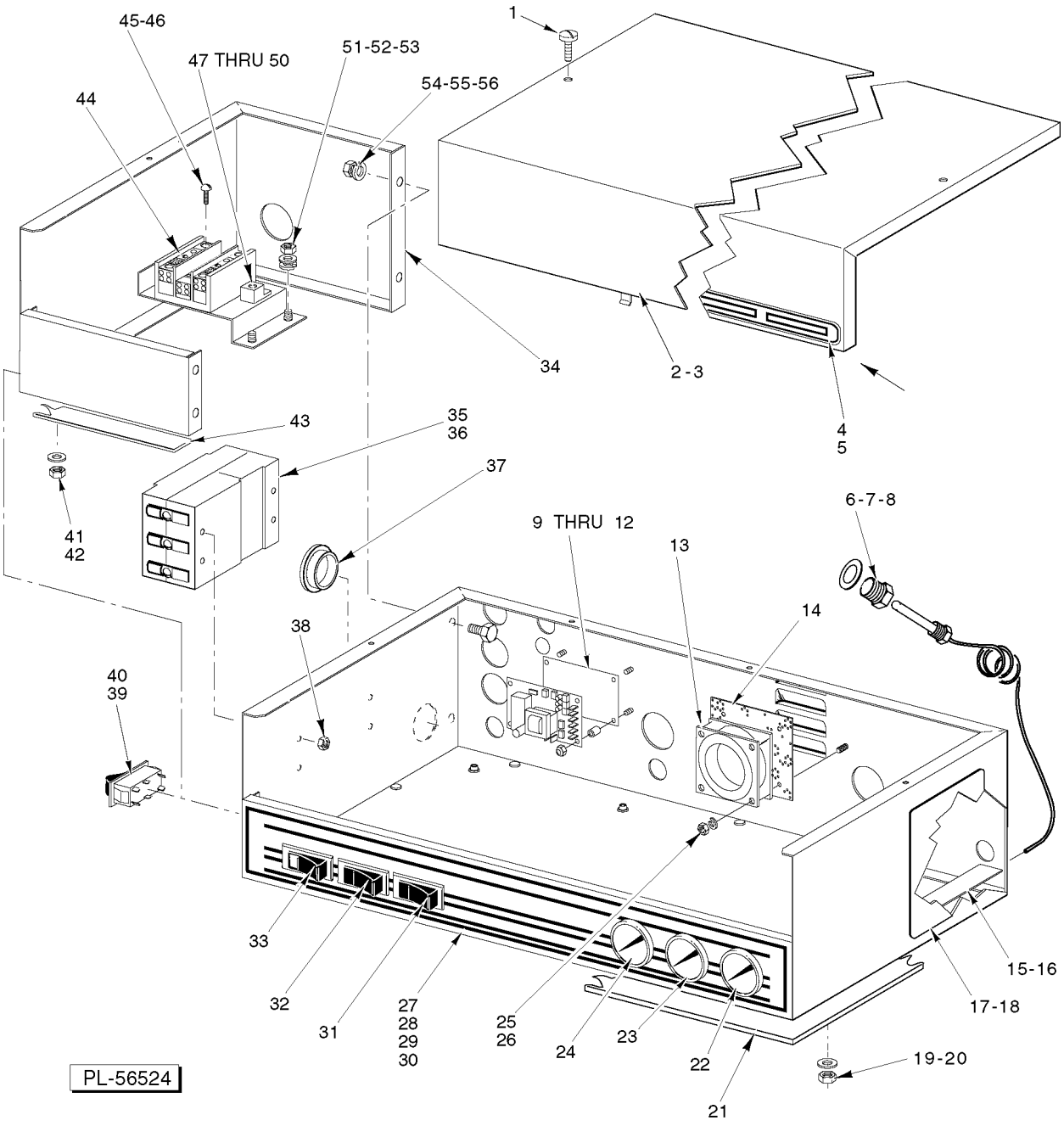
1
45-46
47 THRU 50
51-52-53
54-55-56
44
34
2-3
4
5
43
35
36
37
41
42
9 THRU 12
13
6-7-8
14
38
40
39
33
32
31
27
28
29
30
25
26
24
23
22
21
19-20
15-16
17-18
PL-56524

CONTROL BOX

CONTROL BOX

ILLUS. PL-56524	PART NO.	NAME OF PART	AMT.
1	SC-066-05	Mach. Screw 10-24 x 3/8 Phil. Truss Hd. (SST)	2
2	00-436755-00001	Cover - Control Box (W/O Single Point Electrical Connection)	1
3	00-437073-00001	Cover - Control Box (W/Single Point Electrical Connection)	1
4	00-329820	Label - Temperature (C88A Series)	1
5	00-328928	Label - Temperature (C88W Series)	1
6	00-107218	Coupling - Thermometer Bulb	AR
7	WS-012-40	Washer (SST)	AR
8	FP-053-05	Pipe Lock Nut 1/2 NPSL (SST)	AR
*9	00-892102	Insulator - Control Board	1
*10	00-118349-00003	Spacer - Control Panel	4
*11	00-892107	Control Board - Clutch Assy	1
*12	NS-031-50	Stop Nut 6-32 Hex (SST)	4
13	00-355504-00001	Fan (115 V.)	1
14	00-274884	Guard - Fan	1
15	00-474072	Bracket - Capillary	1
16	SD-008-25	Self-Tapping Screw 10-16 x 1/2 Phil. Pan Hd., Type B	2
17	00-329888	Label - Instruction (C88A Series)	1
18	00-473070	NLA - Obsolete--Label - Instruction (C88W Series)	1
19	WS-022-01	Washer (SST)	6
20	NS-031-21	Stop Nut 1/4-20 Hex (SST)	6
21	00-435072	Gasket	1
22	00-437041-00003	Thermometer (8 Ft.) (Final Rinse) (C88A Series)	1
23	00-437041-00004	Thermometer (11 Ft.) (Rinse)	1
24	00-437041-00004	Thermometer (11 Ft.) (Wash / Rinse)	1
25	WL-006-42	Lockwasher #6 Medium (SST)	3
26	NS-011-07	Mach. Nut 6-32 Hex (SST)	3
27	00-812854	Label - Control Box (W/O Conveyor Dwell) (C88A Series)	AR
28	00-812848	Label - Control Box (W/Conveyor Dwell) (C88A Series)	AR
29	00-812850	Label - Control Box (W/O Conveyor Dwell) (C88W Series)	1
30	00-812852	Label - Control Box (W/Conveyor Dwell) (C88W Series)	1
31	00-087711-241-2	Switch - Rocker (DPDT) (Conveyor Dwell)	1
32	00-087711-228-1	Switch - Rocker (Motor On/Off)	1
33	00-087711-198-2	Switch - Rocker (Power On/Off)	1
34	00-437068-00002	Control Box (Single Point Electrical Connection, Elec. Heat Only)	AR
35	00-276259-00002	Circuit Breaker (20 Amp) (Used on 380-480 V. Machines)	1
36	00-276259-00004	Circuit Breaker (40 Amp) (Used on 200-240 V. Machines)	1
37	FE-024-13	Bushing - Electrical 2 1/2 MT	1
38	NS-031-08	Stop Nut 8-32 Special (SST)	4
39	00-087711-241-2	Switch - Rocker (D.P.D.T.) (Timer)	1
40	00-271840	Label - Timer	1
41	WS-022-01	Washer (SST)	2
42	NS-031-21	Stop Nut 1/4-20 Hex (SST)	2
43	00-526408	Tape - Foam	AR
44	00-119031	Terminal Block	1
45	SC-127-88	Mach. Screw 10-24 x 5/8 Rd. Hd. (SST)	4
46	NS-031-16	Stop Nut 10-24 Elastic (SST)	4
47	00-118544-00002	Lug - Grounding	1
48	SC-021-23	Mach. Screw 10-24 x 1/2 Slotted Rd. Hd. (SST)	1
49	WL-007-12	Lockwasher #10 External Shakeproof	1
50	NS-031-16	Stop Nut 10-24 Elastic (SST)	1
51	WL-006-17	Lockwasher 1/4 Medium (SST)	2
52	WS-022-01	Washer (SST)	2
53	NS-015-01	Nut 1/4-20 Hex (SST)	2
54	NS-015-01	Nut 1/4-20 Hex (SST)	4
55	WL-006-17	Lockwasher 1/4 Medium (SST)	4
56	SC-041-05	Cap Screw 1/4-20 x 5/8 Hex Hd. (SST)	4

* For Machines With Clutch Assembly Only.

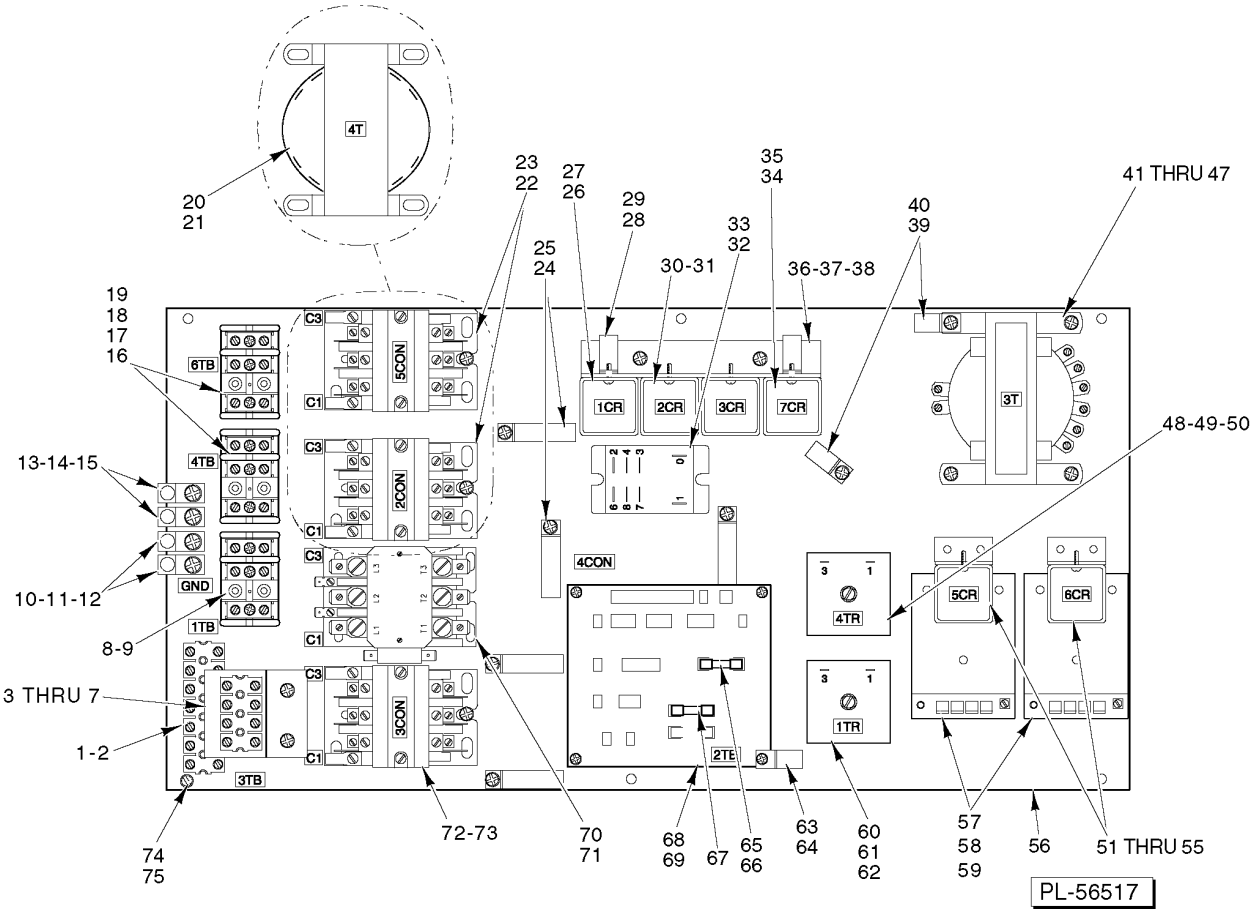

COMPONENT PANEL
(120 V. PILOT CIRCUIT)

COMPONENT PANEL
(120 V. PILOT CIRCUIT)

ILLUS. PL-56517	PART NO.	NAME OF PART	AMT.
1	00-294325-013-5	Block - Terminal	1
2	SD-019-29	Self-Tapping Screw 6-20 x 1/2 Phil. Pan Hd., Type B	2
3	00-294325-013-4	Block - Terminal (Machine W/Vent Fan Control)	1
4	00-437101	Bracket - Vent Fan Control	1
5	SD-008-25	Self-Tapping Screw 10-16 x 1/2 Phil. Pan Hd., Type B	2
6	WL-014-07	Lockwasher #10 External Shakeproof (SST)	2
7	SD-019-29	Self-Tapping Screw 6-20 x 1/2 Phil. Pan Hd., Type B	2
8	00-294325-015-1	Block - Terminal	1
9	SD-037-21	Self-Tapping Screw 8-32 x 1 Phil. Fil. Hd., Type F	2
10	00-118544-00002	Lug - Grounding	2
11	SD-035-77	Self-Tapping Screw 1/4-20 x 3/8 Phil. Pan Hd., Type TT	2
12	WL-007-15	Lockwasher 1/4 External Shakeproof	2
13	00-118544-00002	Lug - Grounding (Electric Heat)	2
14	SD-035-77	Self-Tapping Screw 1/4-20 x 3/8 Phil. Pan Hd., Type TT	2
15	WL-007-15	Lockwasher 1/4 External Shakeproof	2
16	00-294325-015-1	Block - Terminal (200-240 V., 380-480 V., 3 Ph.) (Electric Heat)	2
17	00-294325-004-1	Block - Terminal (Not Shown) (200-240 V., 1 Ph.) (Electric Heat)	2
18	SD-037-21	Self-Tapping Screw 8-32 x 1 Phil. Fil Hd., Type F (Use With Item 16)	4
19	SD-008-36	Self-Tapping Screw 8-18 x 7/8 Phil. Rd. Hd., Type B (Use With Item 17)	4
20	00-294500-026-1	Transformer (75 VA) (Gas Heat)	1
21	SD-008-25	Self-Tapping Screw 10-16 x 1/2 Phil. Pan Hd., Type B	4
22	00-918322	Contactor (40 Amp., 3-Pole)	2
23	SD-008-25	Self-Tapping Screw 10-16 x 1/2 Phil. Pan Hd., Type B	4
24	00-294677-00005	Clamp - Wire 1 1/2 I.D.	5
25	SD-008-25	Self-Tapping Screw 10-16 x 1/2 Phil. Pan Hd., Type B	5
26	00-205113-00001	Relay (3.P.D.T.) Relay 3 P.D.T. (1CR, 3CR, & 4CR)	2
27	SD-019-29	Self-Tapping Screw 6-20 x 1/2 Phil. Pan Hd., Type B	4
28	00-294677-00004	Clamp - Wire 1 I.D.	2
29	SD-008-25	Self-Tapping Screw 10-16 x 1/2 Phil. Pan Hd., Type B	2
30	00-205113-00001	Relay (3.P.D.T.) Relay 3 P.D.T. (115 V.)	1
31	SD-019-29	Self-Tapping Screw 6-20 x 1/2 Phil. Pan Hd., Type B	2
32	00-087714-046-1	Contactor (Machines W/Vent Fan Control)	1
33	SD-008-18	Self-Tapping Screw 8-18 x 3/8 Phil. Bndg. Hd., Type B	2
34	00-205113-00001	Relay (3.P.D.T.) Relay 3 P.D.T. (7CR)	1
35	SD-019-29	Self-Tapping Screw 6-20 x 1/2 Phil. Pan Hd., Type B	2
36	00-437103	Bracket	1
37	SD-008-25	Self-Tapping Screw 10-16 x 1/2 Phil. Pan Hd., Type B	2
38	WL-014-07	Lockwasher #10 External Shakeproof (SST)	2
39	00-294677-00004	Clamp - Wire 1 I.D.	2
40	SD-008-25	Self-Tapping Screw 10-16 x 1/2 Phil. Pan Hd., Type B	2
41	00-294500-046-1	Transformer (150 VA) Pilot Control	1
42	00-294500-046-3	Transformer (500 VA) Pilot Circuit	1
43	SD-035-77	Self-Tapping Screw 1/4-20 x 3/8 Phil. Pan Hd., Type TT (Use With Item 42)	4
44	WL-007-15	Lockwasher 1/4 External Shakeproof (Use With Item 42)	4
45	00-294500-046-2	Transformer (300 VA) Pilot Control	1
46	SD-008-25	Self-Tapping Screw 10-16 x 1/2 Phil. Pan Hd., Type B (Use With Items 41 & 45)	4
47	WL-014-07	Lockwasher #10 External Shakeproof (SST) (Use With Items 41 & 45)	4
48	00-087714-031-2	Relay - Time Delay	1
49	SD-036-13	Self-Tapping Screw 1/4-20 x 1 1/4 Slotted Hex Washer Hd., Type T	1
50	WL-007-15	Lockwasher 1/4 External Shakeproof	1
51	00-205113-00001	Relay (3.P.D.T.) Relay 3 P.D.T. (5CR & 6CR) (Gas Heat)	2
52	SD-019-29	Self-Tapping Screw 6-20 x 1/2 Phil. Pan Hd., Type B	4
53	00-437102	Bracket - Relay Mounting	2
54	SD-008-18	Self-Tapping Screw 8-18 x 3/8 Phil. Bndg. Hd., Type B	4
55	WL-014-05	Lockwasher #8 External Shakeproof (SST)	4

COMPONENT PANEL
(120 V. PILOT CIRCUIT)

ILLUS. PL-56517	PART NO.	NAME OF PART	AMT.
56	00-435508	Base Plate	1
57	00-475458-00001	Thermostat - Solid State (120 V.)	2
58	SD-038-02	Self-Tapping Screw 6-20 x 5/8 Phil. Pan Hd., Type B	6
59	00-476653	Spacer - Circuit Board	4
60	00-087714-031-2	Relay - Time Delay (5 Sec.)	1
61	SD-036-13	Self-Tapping Screw 1/4-20 x 1 1/4 Slotted Hex Washer Hd., Type T	1
62	WL-007-15	Lockwasher 1/4 External Shakeproof	1
63	00-294677-00003	Clamp - Wire	1
64	SD-019-31	Self-Tapping Screw 8-18 x 1/2 Phil. Pan Hd., Type B	1
65	FE-022-39	Fuse (1.5 Amp.) (250 V.)	1
66	FE-021-19	Fuse (3.2 Amp.) (250 V.) (50 Hz. & 50/60 Hz. Machines W/Blower Dryer &/or Condenser)	1
67	FE-023-25	Fuse (5.0 Amp., 250 V.)	1
68	00-294676	PCB - Terminal & Fuse	1
69	SD-008-18	Self-Tapping Screw 8-18 x 3/8 Phil. Bndg. Hd., Type B	3
70	00-087713-018-2	Contactor (W/Aux. Switch) (40 Amp., 3-Pole)	1
71	SD-008-25	Self-Tapping Screw 10-16 x 1/2 Phil. Pan Hd., Type B	2
72	00-087713-040-2	Contactor (40 Amp.) (3 Pole) (Machines W/Conveyor Dwell)	1
73	SD-008-25	Self-Tapping Screw 10-16 x 1/2 Phil. Pan Hd., Type B	2
74	SC-053-05	Mach. Screw 10-24 x 3/8 Slotted Truss Hd. (SST)	6
75	WL-007-12	Lockwasher #10 External Shakeproof	6

NOTES

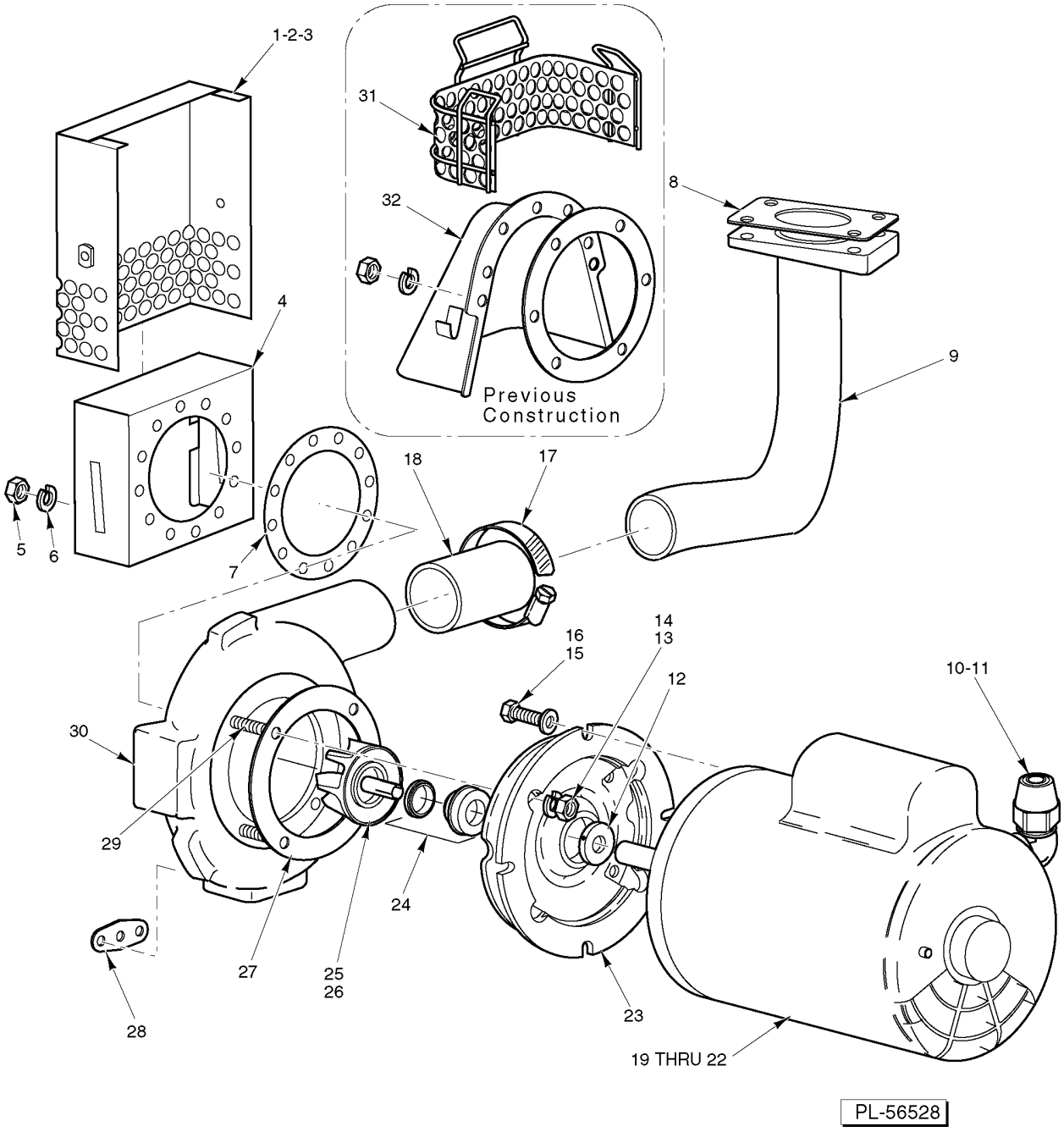

WASH MOTOR AND PUMP UNITS
(2 UNITS REQUIRED)

WASH MOTOR AND PUMP UNITS
(2 UNITS REQUIRED)

ILLUS. PL-56528	PART NO.	NAME OF PART	AMT.
1	SC-041-50	Cap Screw 1/4-20 x 1/2 Hex Hd. (SST)	2
2	WL-006-17	Lockwasher 1/4 Helical (SST)	2
3	00-813543	Strainer - Pump	1
4	00-813527	Slide - Strainer	1
5	NS-015-11	Nut 5/16-18 Hex (SST)	10
6	WL-006-23	Lockwasher 5/16 Helical (SST)	10
7	00-119050	Gasket	1
8	00-270968	Gasket - Wash Pipe	1
9	00-270970	Tube - Discharge	1
10	FE-024-65	Connector 90 Deg. (Non-Metallic) Sealtite (1/2 Male Thd. x 1/2 Flex. Cnd.)	2
11	FE-008-10	Gasket Assy. 1/2	1
12	00-274227-00002	Clamp	1
13	WL-006-22	Lockwasher 5/16 Light (SST)	4
14	NS-015-11	Nut 5/16-18 Hex (SST)	4
15	WS-006-44	Washer (SST)	4
16	SC-041-29	Cap Screw 3/8-16 x 7/8 Hex Hd. (SST)	4
17	00-542337	Clamp - Hose	2
18	00-749586	Hose - Discharge	1
19	00-274230-00001	Motor (1 Ph., 60 Hz.) (2 Hp.)	1
20	00-274230-00002	Motor (3 Ph., 60 Hz.) (2 Hp.)	1
21	00-274230-00003	Motor (1 Ph., 50 Hz.) (2 Hp.)	1
22	00-274230-00004	Motor (3 Ph., 50 Hz.) (2 Hp.)	1
23	00-274227-00003	Adapter	1
24	00-274227-00006	Seal - Shaft	1
25	00-274227-00007	Impeller & Sleeve (60 Hz.)	1
26	00-274227-00010	Impeller & Sleeve (50 Hz.)	1
27	00-274227-00004	Gasket	1
28	00-119051	Gasket	2
29	00-274227-00005	Stud	AR
30	00-274227-00001	Pump Shell (Incls. Item 29)	1
31	00-328362	Strainer - Pump (Previous Construction)	1
32	00-274246	Shroud (Previous Construction)	1

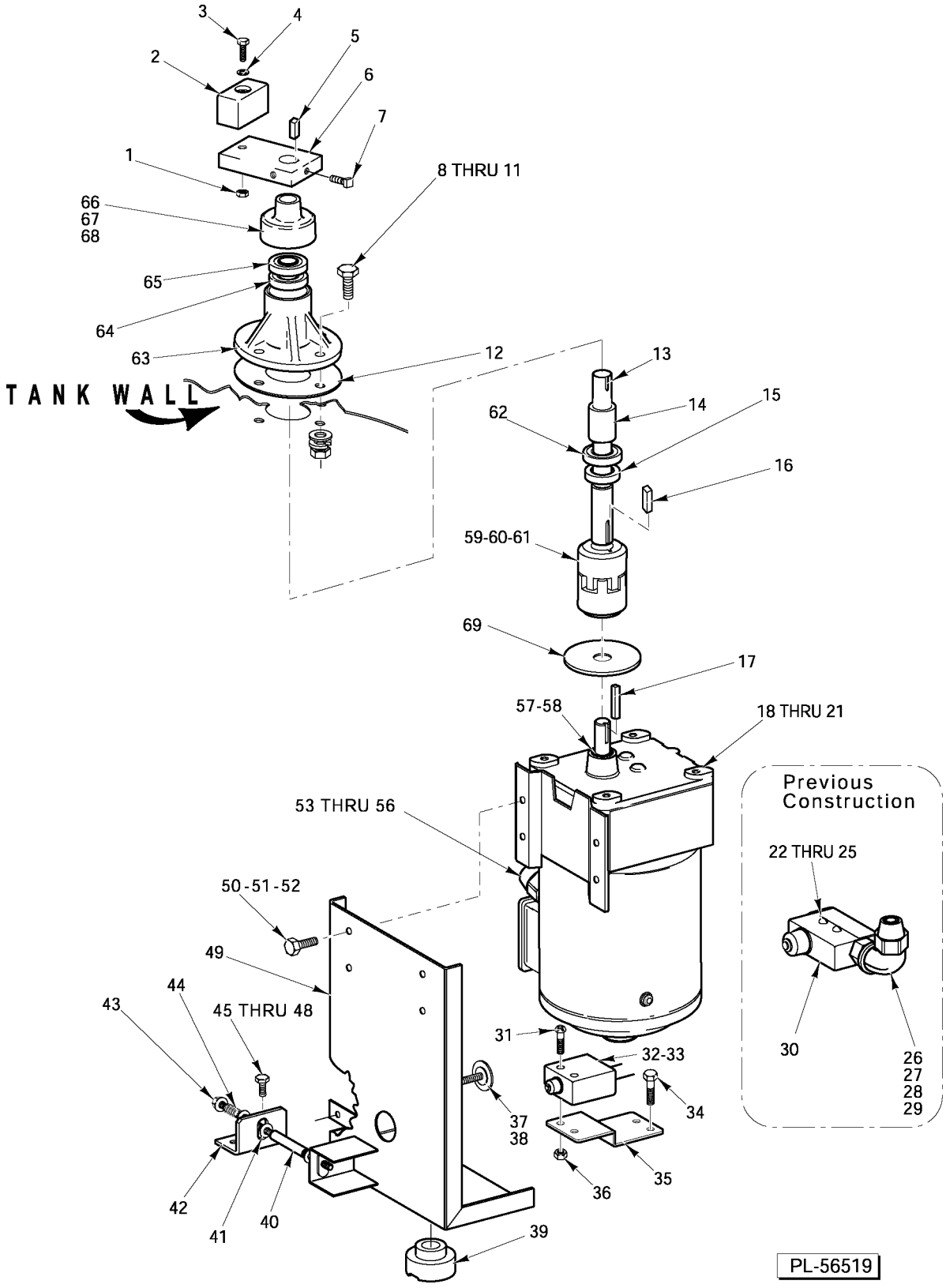

CONVEYOR DRIVE UNIT
(PREVIOUS CONSTRUCTION)

CONVEYOR DRIVE UNIT
(PREVIOUS CONSTRUCTION)

ILLUS. PL-56519	PART NO.	NAME OF PART	AMT.
1	NS-032-35	Stop Nut 5/16-18 Flexloc (SST)	1
2	00-474660	Slide - Drive Crank	1
3	SC-041-20	Cap Screw 5/16-18 x 2-1/8 Hex Hd. (SST)	1
4	WS-005-32	Washer (SST)	1
5	00-012430-00039	Key 3/16 Sq. x 3/8 Lg	1
6	00-270943	Arm - Crank	1
7	SC-050-01	Set Screw 1/4-20 x 1/2 Sq. Hd., Cup Pt	2
8	SC-041-13	Cap Screw 5/16-18 x 1 Hex Hd. (SST)	4
9	WS-017-08	Washer (SST)	4
10	WL-006-23	Lockwasher 5/16 Helical (SST)	4
11	NS-015-11	Nut 5/16-18 Hex (SST)	4
12	00-270942	Gasket	1
13	00-270937	Shaft - Crank	1
14	00-436879	Spacer - Bearing	1
15	00-270939	Seal - Lower Housing	1
16	00-012430-00040	Key 3/16 Sq. x 3/4 Lg	1
17	00-274231-00057	Key 3/16 Sq. x 3/4 Lg	1
18	00-437044-00011	Motor - Conveyor Drive (200-230/460 V., 60 Hz., 3 Ph.) (Incls. Items 17, 57, & 58)	1
19	00-437044-00012	Motor - Conveyor Drive (200-240 V., 60 Hz., 1 Ph.) (Incls Items 17, 57, & 58)	1
20	00-437044-00013	Motor - Conveyor Drive (200-240 V., 50 Hz., 1 Ph.) (Incls. Items 17, 57, & 58)	1
21	00-437044-00014	Motor - Conveyor Drive (220-240/380-415 V., 50 Hz., 3 Ph.) (Incls. Items 17, 57, & 58)	1
22	SC-027-24	Mach. Screw 6-32 x 1 1/2 Slotted Rd. Hd. (Brass)	2
23	WL-010-22	Lockwasher #6 External Shakeproof (Bronze)	2
24	WS-002-06	Washer (Brass)	4
25	NS-010-06	Mach. Nut 6-32 Hex (Brass)	2
26	FE-024-57	Connector Straight (Non-Metallic) Sealtite (1/2 Male Thd. x 1/2 Flex. Cnd.)	1
27	FE-008-10	Gasket Assy. 1/2	1
28	FE-024-61	Connector 45 Deg. (Non-Metallic) Sealtite (1/2 Male Thd. x 1/2 Flex. Cnd.)	1
29	FE-006-07	Lock Nut 1/2 (Cnd.)	1
30	00-087711-060-1	Switch - Interlock (Incls. Items 22 Thru 25)	1
31	SC-127-89	Mach. Screw 10-24 x 3/4 Phil. Rd. Hd. (SST)	2
32	00-087711-260-2	Switch - Interlock	1
33	FE-022-84	Strain Relief 1/2 NPT	1
34	SC-067-05	Mach. Screw 8-32 x 1/2 Hex Hd. (SST)	2
35	00-474488	Bracket - Switch	1
36	NS-031-16	Stop Nut 10-24 Hex (SST)	2
37	00-289256	Actuator - Switch	1
38	NS-032-33	Stop Nut 1/4-28 Flexloc (SST)	1
39	00-270927	Pilot Bearing	1
40	00-271083	Spacer - Overload	1
41	WS-029-05	Washer 0.328 x 0.750 x 0.062 (SST)	4
42	00-436017	Bracket - Overload	1
43	SC-120-72	Cap Screw 5/16-18 x 4 1/2 Hex Hd. (SST)	1
44	00-436952	Spring - Overload	1
45	SC-041-10	Cap Screw 5/16-18 x 5/8 Hex Hd. (SST)	2
46	WL-006-23	Lockwasher 5/16 Helical (SST)	2
47	NS-015-11	Nut 5/16-18 Hex (SST)	2
48	WS-029-05	Washer (SST)	2
49	00-328027	Bracket - Motor	1
50	SC-041-05	Cap Screw 1/4-20 x 5/8 Hex Hd. (SST)	4
51	WL-006-17	Lockwasher 1/4 Medium (SST)	4
52	NS-015-01	Nut 1/4-20 Hex (SST)	4
53	FE-024-61	Connector 45 Deg. (Non-Metallic) Sealtite (1/2 Male Thd. x 1/2 Flex. Cnd.)	1
54	FE-024-65	Connector 90 Deg. (Non-Metallic) Sealtite (1/2 Male Thd. x 1/2 Flex. Cnd.)	1
55	FE-008-10	Gasket Assy. 1/2	2

CONVEYOR DRIVE UNIT
(PREVIOUS CONSTRUCTION)

ILLUS. PL-56519	PART NO.	NAME OF PART	AMT.
56	FE-006-07	Lock Nut 1/2 (Cnd.)	1
57	00-328379-00001	Seal - Oil (Output Shaft - Shown)	1
58	00-328379-00002	Seal - Oil (Motor Drive Shaft)	1
59	00-328083	Coupling - Motor	1
60	00-274228-00002	Insert - Coupling Service (LoveJoy)	AR
61	00-274228-00001	Insert - Coupling Service (Browning)	AR
62	BB-021-19	Ball Bearing - Hoover NSK 6003	1
63	00-274749	Housing Assy. (Incls. Items 13, 14, 15, 62, 64, 65, & 66)	1
64	BB-021-19	Ball Bearing - Hoover NSK 6003	1
65	00-270940	Seal - Upper Housing	1
66	00-274748	Seal - Labyrinth	1
67	00-527042	Adhesive	AR
68	00-522696	Solvent	AR
69	00-474423	Flinger	1

NOTES

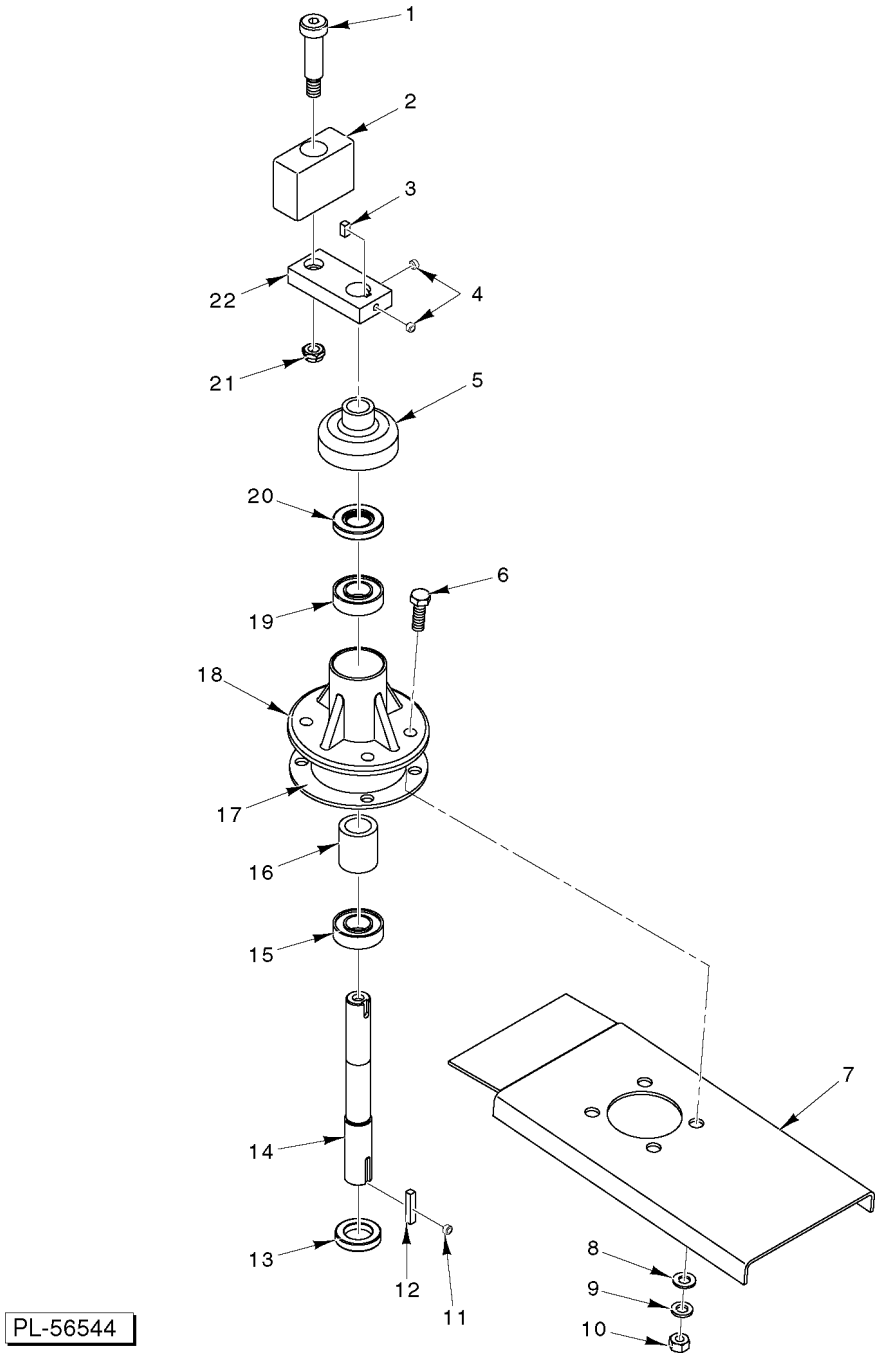

CONVEYOR MOTOR/CLUTCH ASSEMBLY
(CURRENT CONSTRUCTION)

CONVEYOR MOTOR/CLUTCH ASSEMBLY (CURRENT CONSTRUCTION)

ILLUS. PL-56544	PART NO.	NAME OF PART	AMT.
1	SC-124-20	Shoulder Screw 3/8-16 (1/2 Dia. x 1 1/2 Lg.) Hex Hd. (SST)	1
2	00-474660	Slide - Drive Crank	1
3	00-012430-00039	Key	1
4	SC-050-01	Set Screw 1/4-20 x 1/2 Sq. Hd., Cup Pt. (SST)	2
5	00-274748	Seal - Labyrinth	1
6	SC-041-13	Cap Screw 3/16-18 x 1 Hex Hd. (SST)	4
7		Bracket	1
8	WS-017-08	Washer (SST)	4
9	WL-006-23	Lockwasher 3/16 Medium (SST)	4
10	NS-015-11	Nut 3/16-18 Hex (SST)	4
11	SC-075-10	Set Screw 1/4-20 x 3/16 Hex Hdls., Cup Pt.	1
12	00-012430-00093	Key 3/16 x 3/16 x 1	1
13	00-270939	Seal - Lower Housing	1
14	00-270937	Shaft - Crank	1
15	BB-021-19	Ball Bearing - Hoover NSK 6003	1
16	00-436879	Spacer - Bearing	1
17	00-270942	Gasket	1
18	00-270936	Housing - Bearing	1
19	BB-021-19	Ball Bearing - Hoover NSK 6003	1
20	00-270940	Seal - Upper Housing	1
21	NS-048-86	Lock Nut 3/8-16 Special Flexloc (SST)	1
22	00-749978	Arm - Crank	1
	00-274749	Housing Assy. (Incls. Items 5 & 11 thru 20)	1
	00-892111	Crank Arm Service Kit (Incls. Items 1, 21, & 22)	1

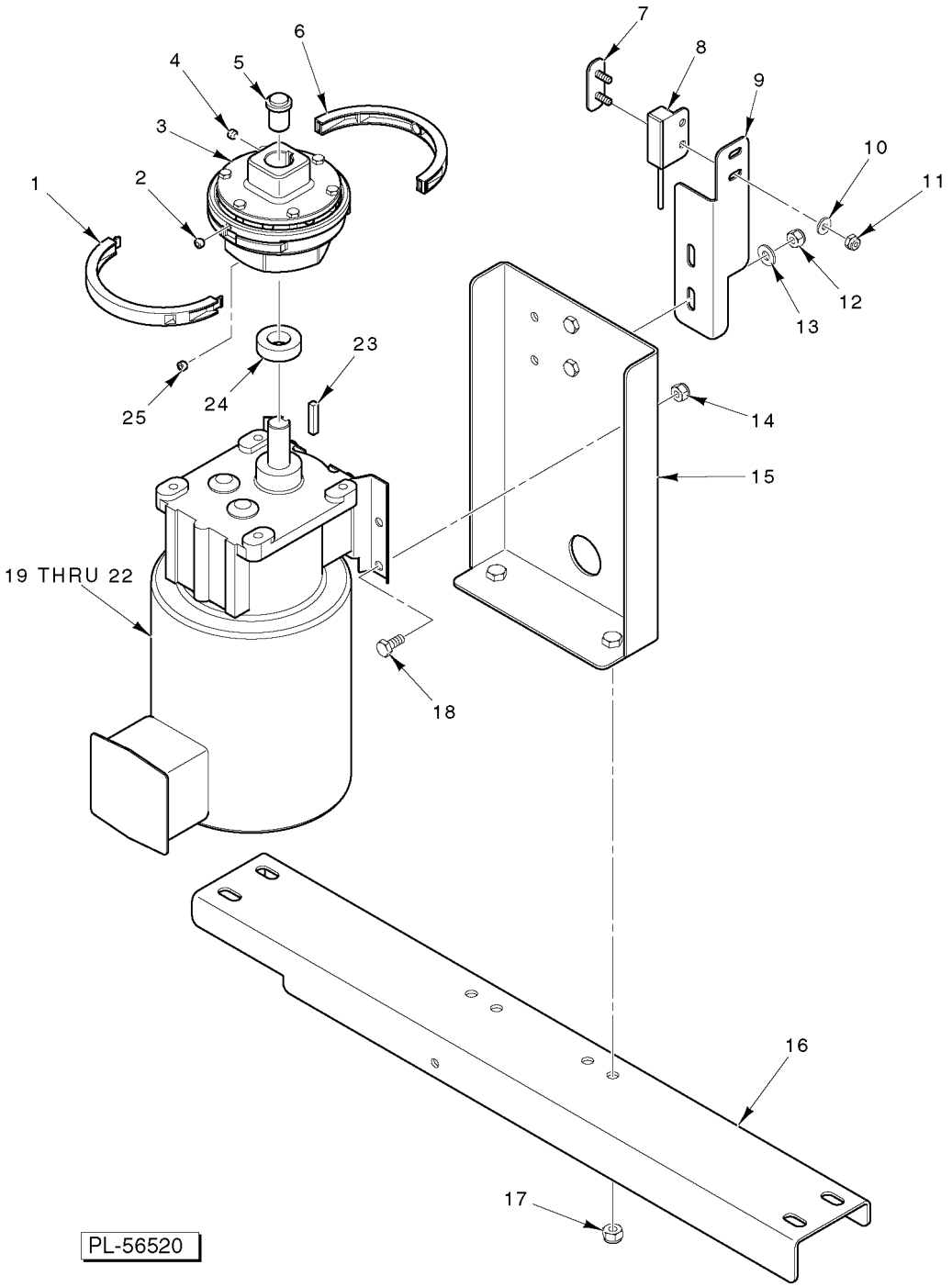

CONVEYOR DRIVE MOTOR
(CURRENT CONSTRUCTION)

CONVEYOR DRIVE MOTOR
(CURRENT CONSTRUCTION)

ILLUS. PL-56520	PART NO.	NAME OF PART	AMT.
1	00-892024-00001	Ring - Magnet Assy. (Male)	1
2	SC-075-10	Set Screw 1/4-20 x 3/16 Hex Hdls., Cup Pt.	2
3	00-749500	Clutch - Detent Assy.	1
4	SC-075-10	Set Screw 1/4-20 x 3/16 Hex Hdls., Cup Pt.	2
5	00-749999	Plug - Clutch Keyway	1
6	00-892024-00002	Ring - Magnet Assy. (Female)	1
7	00-892570	Plate - Sensor Mounting	1
8	00-892533	Sensor - Latching Hall	1
9	00-892498	Bracket - Sensor	1
10	WS-019-20	Washer 0.219 x 0.375 x 0.031 (SST)	2
11	NS-031-15	Stop Nut 10-24 Hex (SST)	2
12	NS-047-82	Stop Nut 1/4-20 Hex (SST)	2
13	WS-017-06	Washer (SST)	2
14	NS-047-82	Stop Nut 1/4-20 Hex (SST)	4
15	00-892163	Support - Motor Mounting	1
16	00-892162	Support - Motor	1
17	NS-036-19	Stop Nut 5/19-18 Hex (SST)	2
18	SC-041-01	Cap Screw 1/4-20 x 3/4 Hex Hd. (SST)	4
19	00-437044-00011	Motor - Conveyor Drive (208-240/480 V., 60 Hz., 3 Ph.)	1
20	00-437044-00012	Motor - Conveyor Drive (208-240 V., 60 Hz., 1 Ph.)	1
21	00-437044-00013	Motor - Conveyor Drive (200-240 V., 50 Hz., 3 Ph.)	1
22	00-437044-00014	Motor - Conveyor Drive (200-240/380-415 V., 50 Hz., 3 Ph.)	1
23	00-274231-00057	Key 3/16 x 3/16 x 1 1/4	1
24	00-749829	Bushing - Thrust	1
25	SC-075-10	Set Screw 1/4-20 x 3/16 Hex Hdls., Cup Pt.	2

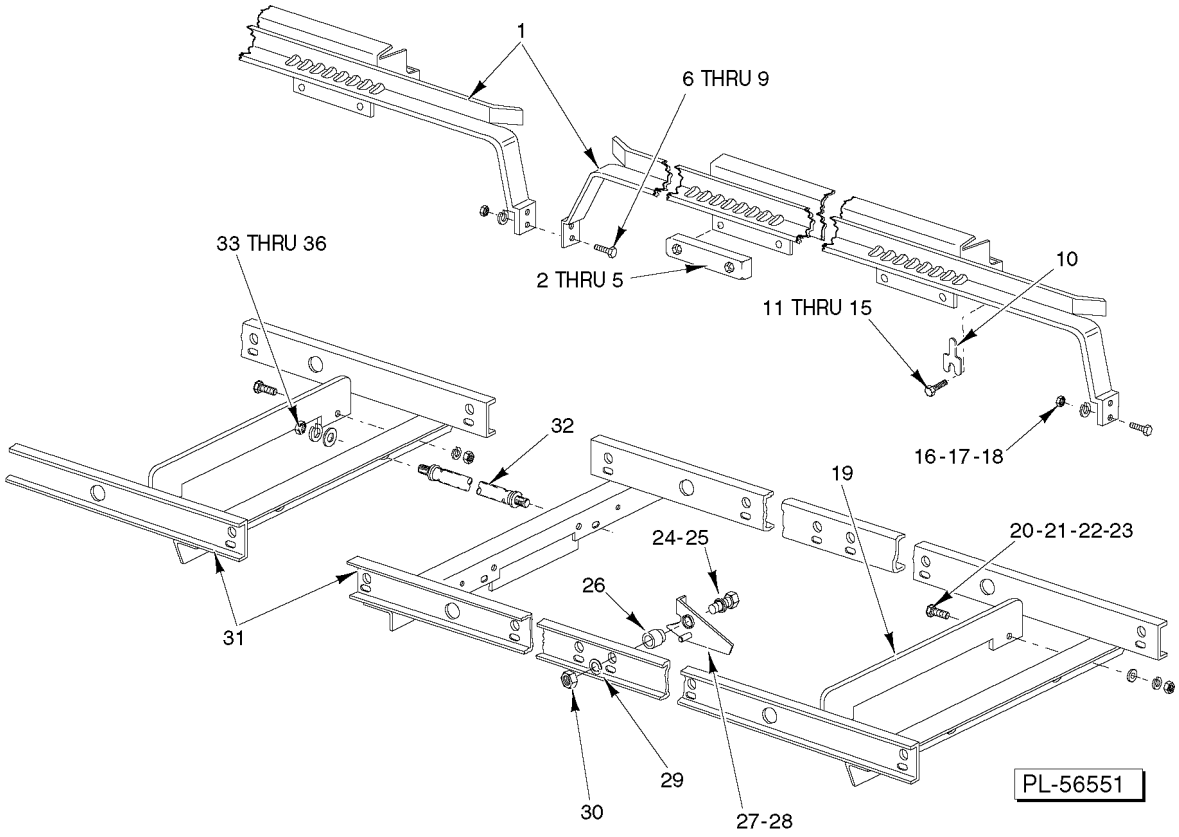

TRACK AND CRADLE
(WASH/RINSE SECTION)

TRACK AND CRADLE
(WASH/RINSE SECTION)

ILLUS. PL-56551	PART NO.	NAME OF PART	AMT.
1	00-436873-00001	Rack Track	4
2	00-473231	Slider - Large	8
3	SC-041-14	Cap Screw 5/16-18 x 1 1/8 Hex Hd. (SST)	16
4	WL-006-23	Lockwasher 5/16 Helical (SST)	16
5	NS-015-11	Nut 5/16-18 Hex (SST)	16
6	SC-041-12	Cap Screw 5/16-18 x 7/8 Hex Hd. (SST)	4
7	WL-006-23	Lockwasher 5/16 Helical (SST)	4
8	WS-017-08	Washer (SST)	8
9	NS-015-11	Nut 5/16-18 Hex (SST)	4
10	00-329546	Shim - Rack Track	26
11	SC-041-13	Cap Screw 5/16-18 x 1 Hex Hd. (SST) (Mounts Front Track)	8
12	SC-041-11	Cap Screw 5/16-18 x 3/4 Hex Hd. (SST)	16
13	WS-017-01	Washer (SST)	40
14	WL-006-23	Lockwasher 5/16 Helical (SST)	16
15	NS-015-11	Nut 5/16-18 Hex (SST)	16
16	NS-015-11	Nut 5/16-18 Hex (SST)	8
17	WL-006-23	Lockwasher 5/16 Helical (SST)	8
18	SC-041-11	Cap Screw 5/16-18 x 3/4 Hex Hd. (SST)	8
19	00-271012	Bafle - Cradle Upper	2
20	SC-041-10	Cap Screw 5/16-18 x 5/8 Hex Hd. (SST)	4
21	NS-015-11	Nut 5/16-18 Hex (SST)	4
22	WS-017-08	Washer (SST)	4
23	WL-006-23	Lockwasher 5/16 Helical (SST)	4
24	WS-018-04	Washer (SST)	12
25	SC-041-31	Cap Screw 3/8-16 x 1 1/4 Hex Hd. (SST)	12
26	00-270983	Spacer	12
27	00-436704-00001	Dog (Front, R-L; Rear, L-R)	6
28	00-436704-00002	Dog - Not Shown (Front, L-R; Rear, R-L)	6
29	WL-006-28	Lockwasher 3/8 Medium (SST)	12
30	NS-046-09	Nut 3/8-16 Elastic (SST)	12
31	00-436928	Cradle	2
32	00-329480	Screw - Connecting	2
33	WS-017-01	Washer (SST)	4
34	WL-006-23	Lockwasher 5/16 Helical (SST)	4
35	WS-029-74	Washer (SST)	8
36	NS-015-11	Nut 5/16-18 Hex (SST)	4
	00-436927-00001	Cradle & Dog Assy. R-L (Standard Racks Only) (Incls. Items 24 thru 31)	2
	00-436927-00002	Cradle & Dog Assy. L-R (Standard Racks Only) (Incls. Items 24 thru 31)	2
	00-436968	Rack Track Assy. (Incls. Items 1 thru 5)	4
			AR

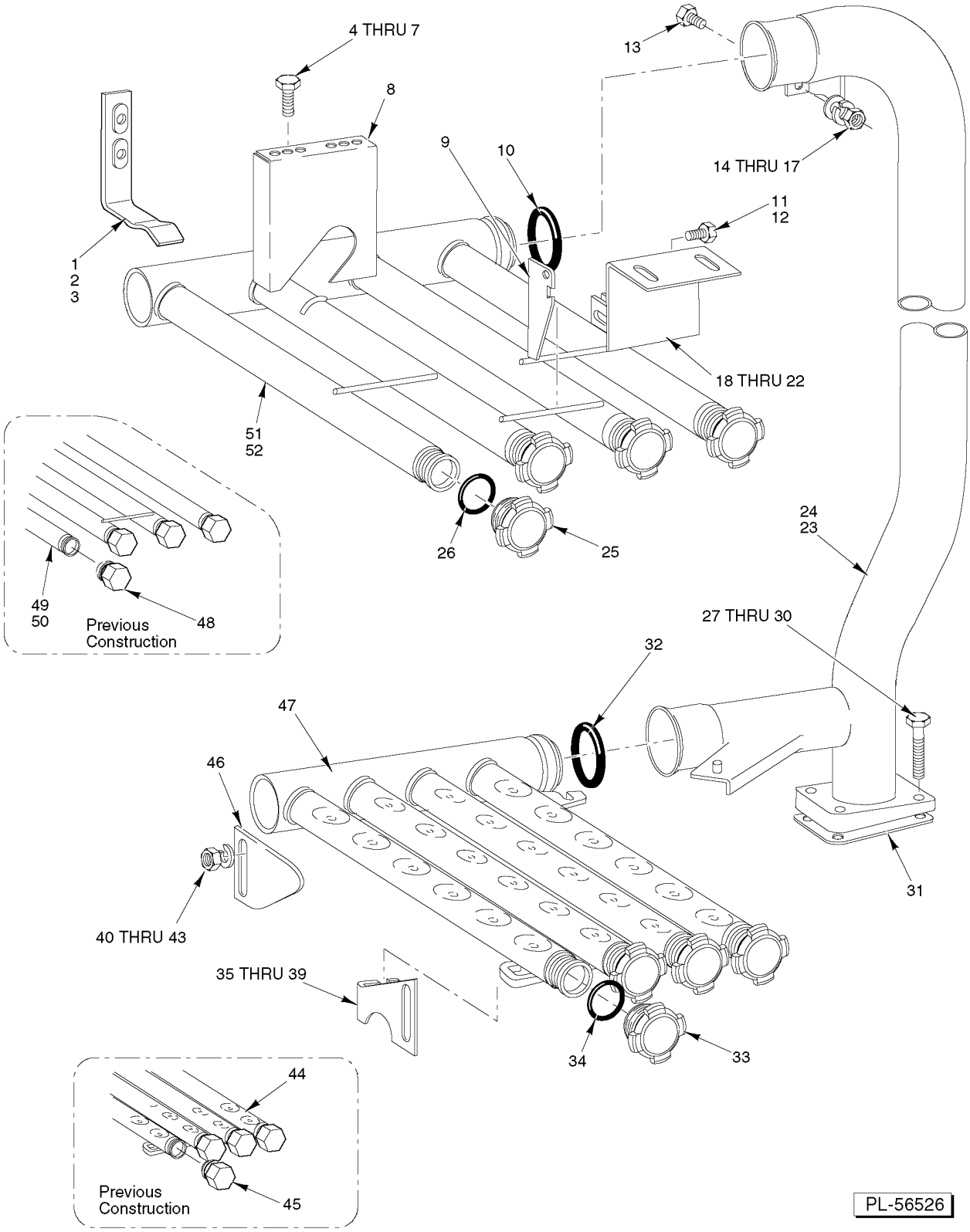

WASH ARMS AND TUBES - WASH/RINSE SECTION
(2 UNITS REQUIRED)

WASH ARMS AND TUBES - WASH/RINSE SECTION (2 UNITS REQUIRED)

ILLUS. PL-56526	PART NO.	NAME OF PART	AMT.
1	00-436947-00001	Hanger	2
2	SC-041-50	Cap Screw 1/4-20 x 1/2 Hex Hd. (SST)	4
3	WL-006-17	Lockwasher 1/4 Medium (SST)	4
4	SC-053-17	Mach. Screw 5/16-18 x 3/4 Slotted Truss Hd. (SST)	2
5	WS-017-01	Washer (SST)	2
6	WL-006-23	Lockwasher 5/16 Helical (SST)	2
7	NS-015-11	Nut 5/16-18 Hex (SST)	2
8	00-436007	Guide - Upper Wash Arm	1
9	00-289760	Latch	1
10	00-067500-00110	O-Ring	1
11	SC-041-01	Cap Screw 1/4-20 x 3/4 Hex Hd. (SST)	2
12	NS-031-19	Stop Nut 1/4-20 Elastic (SST)	2
13	SC-041-05	Cap Screw 1/4-20 x 5/8 Hex Hd. (SST)	1
14	WS-003-49	Washer (SST)	1
15	WL-006-17	Lockwasher 1/4 Medium (SST)	1
16	NS-015-01	Nut 5/16-20 Hex (SST)	1
17	00-508454	Sealer (1/8 Rd.)	AR
18	00-812817	Bracket (Incls. Items 9, 11, & 12)	1
19	SC-125-27	Mach. Screw 5/16-18 x 3/4 Phil. Truss Hd. (SST)	2
20	WS-017-08	Washer (SST)	2
21	WL-006-23	Lockwasher 5/16 Helical (SST)	2
22	NS-015-11	Nut 5/16-18 Hex (SST)	2
23	00-329595	Wash Pipe (26 1/8 Door Height)	1
24	00-329597	Wash Pipe (32 1/8 Door Height)	1
25	00-475589	Plug - Wash Arm (Current Construction)	4
26	00-067500-00127	O-Ring - AS568 Size 124 (1.237 x .103)	4
27	SC-041-18	Cap Screw 5/16-18 x 1 3/4 Hex Hd. (SST)	4
28	WS-017-08	Washer (SST)	8
29	WL-006-23	Lockwasher 5/16 Helical (SST)	4
30	NS-015-11	Nut 5/16-18 Hex (SST)	4
31	00-270968	Gasket - Wash Pipe	1
32	00-067500-00110	O-Ring	1
33	00-475589	Plug - Wash Arm (Current Construction)	4
34	00-067500-00127	O-Ring - AS568 Size 124 (1.237 x .103)	4
35	00-436939-00004	Catch - Adjustable	1
36	SC-041-11	Cap Screw 5/16-18 x 3/4 Hex Hd. (SST)	2
37	NS-015-11	Nut 5/16-18 Hex (SST)	2
38	WL-006-23	Lockwasher 5/16 Helical (SST)	2
39	WS-017-08	Washer (SST)	2
40	SC-041-13	Cap Screw 5/16-18 x 1 Hex Hd. (SST)	2
41	WL-006-23	Lockwasher 5/16 Helical (SST)	2
42	WS-017-08	Washer (SST)	2
43	NS-015-11	Nut 5/16-18 Hex (SST)	2
44	00-271035	Wash Arm - Lower (Previous Construction)	1
45	00-475087	Plug - Wash Arm Plug - Wash Arm (Previous Construction)	4
46	00-274222	Support - Adjustable	1
47	00-749405	Wash Arm - Lower (Current Construction)	1
48	00-475087	Plug - Wash Arm	4
49	00-271040	Wash Arm - Upper (R-L) (Previous Construction)	1
50	00-271831	Wash Arm - Upper (L-R) (Previous Construction)	1
51	00-749406	Wash Arm - Upper (R-L) (Current Construction)	1
52	00-749407	Wash Arm - Upper (L-R) (Current Construction)	1

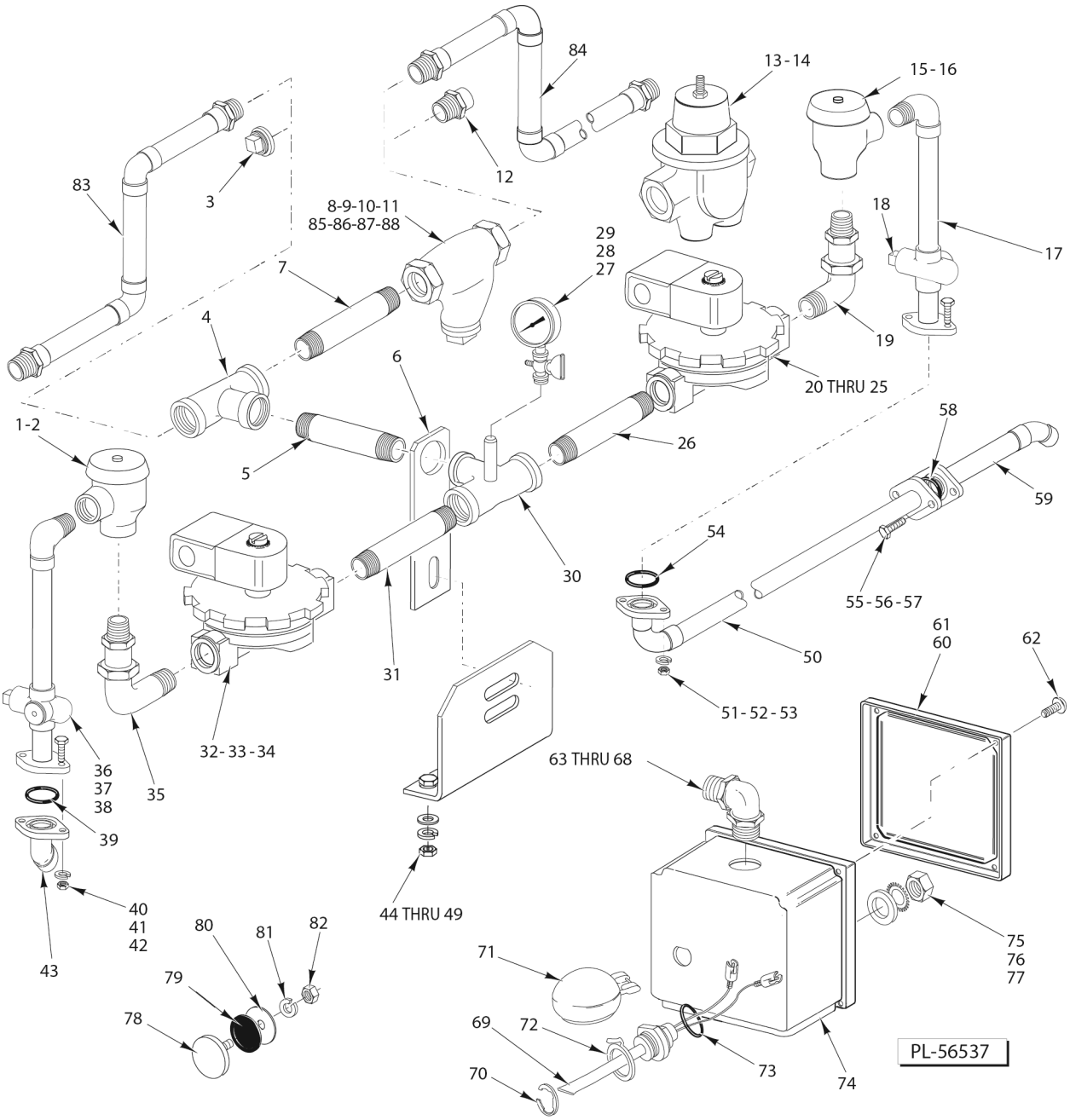

FILL PIPING
(PREVIOUS CONSTRUCTION)

FILL PIPING
(PREVIOUS CONSTRUCTION)

ILLUS. PL-56537	PART NO.	NAME OF PART	AMT.
1	00-277112-00003	Vacuum Breaker (3/4)	1
2	00-118270	Service Kit - Vacuum Breaker	1
3	FP-028-19	Plug Pipe (Use W/Seperate Fill)	1
4	FP-019-28	Tee 3/4 Bronze	1
5	FP-041-88	Nipple 3/4 x 5 Lg. TBE (Brass)	1
6	00-435967	Plate - Fill Piping	1
7	FP-041-66	Nipple 3/4 x 3 TBE	1
*8	00-186922	Strainer - Line (3/4 In.) (Brass) (Kitz) (Incls. Items 9, 10, & 11) (Alternate to Item 36)	1
9	00-186923	Plug - Branch	1
10	00-186924	Gasket - Branch Plug	1
11	00-186925	Screen - Line Strainer	1
12	00-123366	Union 3/4 Copper Tube x 3/4 MPT	1
13	00-893294	Valve - Pressure Regulating (3/4 In.) Valve - Pressure Regulating	1
14	00-289091-00001	Repair Kit - Pressure Regulating Valve	1
15	00-277112-00003	Vacuum Breaker (3/4)	1
16	00-118270	Service Kit - Vacuum Breaker	1
17	00-329610-00002	Fill Piping - Outside (RH)	1
18	FP-052-07	Plug 1/2 Pipe	1
19	00-328764	Adapter Elbow 3/4 x 90 Deg	1
20	00-271002-00001	Solenoid Valve (120 V.) (Incls. Items 21 & 22)	1
21	00-271839-00001	Coil - Solenoid Valve	1
22	00-271838	Service Kit - Solenoid Valve	1
23	FE-024-65	Connector 90 Deg. (Non-Metallic) Sealtite (1/2 Male Thd. x 1/2 Flex. Cnd.)	1
24	FE-024-61	Connector 45 Deg. (Non-Metallic) Sealtite (1/2 Male Thd. x 1/2 Flex. Cnd.)	1
25	FE-024-57	Connector Straight (Non-Metallic) Sealtite (1/2 Male Thd. x 1/2 Flex. Cnd.)	2
26	FP-041-74	Pipe 3/4 x 3 1/4 TBE	1
27	00-328247	Pressure Gauge - Water (Common Fill)	1
28	00-436319	Petcock 1/4	1
29	FP-028-46	Plug 1/4 Pipe (Seperate Fill)	1
30	00-328763	Tee - Weldment	1
31	FP-041-74	Pipe 3/4 x 3 1/4 TBE	1
32	00-271002-00001	Solenoid Valve 3/4 (120 V.) (Incls. Items 33 & 34)	1
33	00-271839-00001	Coil - Solenoid Valve	1
34	00-271838	Service Kit - Solenoid Valve	1
35	00-328764	Adapter Elbow 3/4 x 90 Deg	1
36	00-329610-00001	Fill Piping - Outside (LH)	1
37	FP-052-07	Plug 1/2 Pipe	1
38	00-119127	Pipe Plug	2
39	00-067500-00012	O-Ring	2
40	NS-015-11	Nut 5/16-18 Hex (SST)	2
41	WL-006-23	Lockwasher 5/16 Helical (SST)	2
42	SC-041-15	Cap Screw 5/16-18 x 1 1/4 Hex Hd. (SST)	2
43	00-435972-00001	Piping - Inside (LH)	1
44	00-435974	Bracket - Fill Piping	1
45	SC-041-12	Cap Screw 5/16-18 x 7/8 Hex Hd. (SST)	2
46	SC-041-11	Cap Screw 5/16-18 x 3/4 Hex Hd. (SST)	2
47	WS-029-05	Washer (SST)	6
48	WL-006-23	Lockwasher 5/16 Helical (SST)	4
49	NS-015-11	Nut 5/16-18 Hex (SST)	4
50	00-328806	Piping - Connector (RH)	1
51	NS-015-11	Nut 5/16-18 Hex (SST)	2
52	WL-006-23	Lockwasher 5/16 Helical (SST)	2
53	SC-041-15	Cap Screw 5/16-18 x 1 1/4 Hex Hd. (SST)	2
54	00-067500-00012	O-Ring	2
55	SC-041-15	Cap Screw 5/16-18 x 1 1/4 Hex Hd. (SST)	2

FILL PIPING
(PREVIOUS CONSTRUCTION)

ILLUS. PL-56537	PART NO.	NAME OF PART	AMT.
56	WL-006-23	Lockwasher 5/16 Helical (SST)	2
57	NS-015-11	Nut 5/16-18 Hex (SST)	2
58	00-067500-00012	O-Ring	2
59	00-289971-00002	Piping - Inside Fill (RH)	1
60	00-288465	Lid & Gasket Assy. (Incls. Item 61)	2
61	00-112007	Gasket	2
62	SD-012-20	Self-Tapping Screw 8-32 x 1/2 Phil. Truss Hd., Type T	8
63	FE-024-57	Connector - Straight Sealtite (1/2 Male Thd. x 1/2 Flex. Cnd.) (LH Tank)	2
64	FE-006-45	Connector - Straight 1/2 (Thinwall) (RH Tank)	1
65	FE-024-49	Connector - Straight 1/2 (Thinwall) (RH Tank)	1
66	FE-006-05	Lock Nut 1/2 Electrical (RH Tank)	1
67	FE-008-10	Gasket (RH Tank)	2
68	FE-006-07	Lock Nut 1/2 (Cnd.) (RH Tank)	1
69	00-328495	Probe & Switch Assy. (2 Wire) (Water Level)	2
70	RR-010-13	Retaining Ring	2
71	00-122674	Float Assy	2
72	00-112467	Retainer - Float	2
73	00-067500-00072	O-Ring	2
74	00-270926	Junction Box	2
75	NS-018-28	Jam Nut 1/2-20 Hex (SST)	2
76	WL-014-31	Lockwasher 1/2 External Shakeproof (SST)	2
77	WS-010-40	Washer - Thrust	2
78	00-119244	Cap & Stud Assy	2
79	00-067500-00031	O-Ring	2
80	00-119254	Retainer - Cap	2
81	WL-006-17	Lockwasher 1/4 Medium (SST)	2
82	NS-015-01	Nut 1/4-20 Hex (SST)	2
83	00-329558	Piping - Common (R-L)	1
84	00-329549	Piping - Common (L-R)	1
*85	00-186922	Strainer - Line (3/4 In.) (Brass) (Apollo / Conbraco) (Incls. Items 86, 87, & 88) (Alternate to Item 8)	1
86	00-749802-00001	Cap	1
87	00-749802-00002	Gasket	1
88	00-749802-00003	Screen (80 Mesh)	1

* Kitz line strainer is approx. 1/4" shorter than Apollo / Conbraco.

NOTES

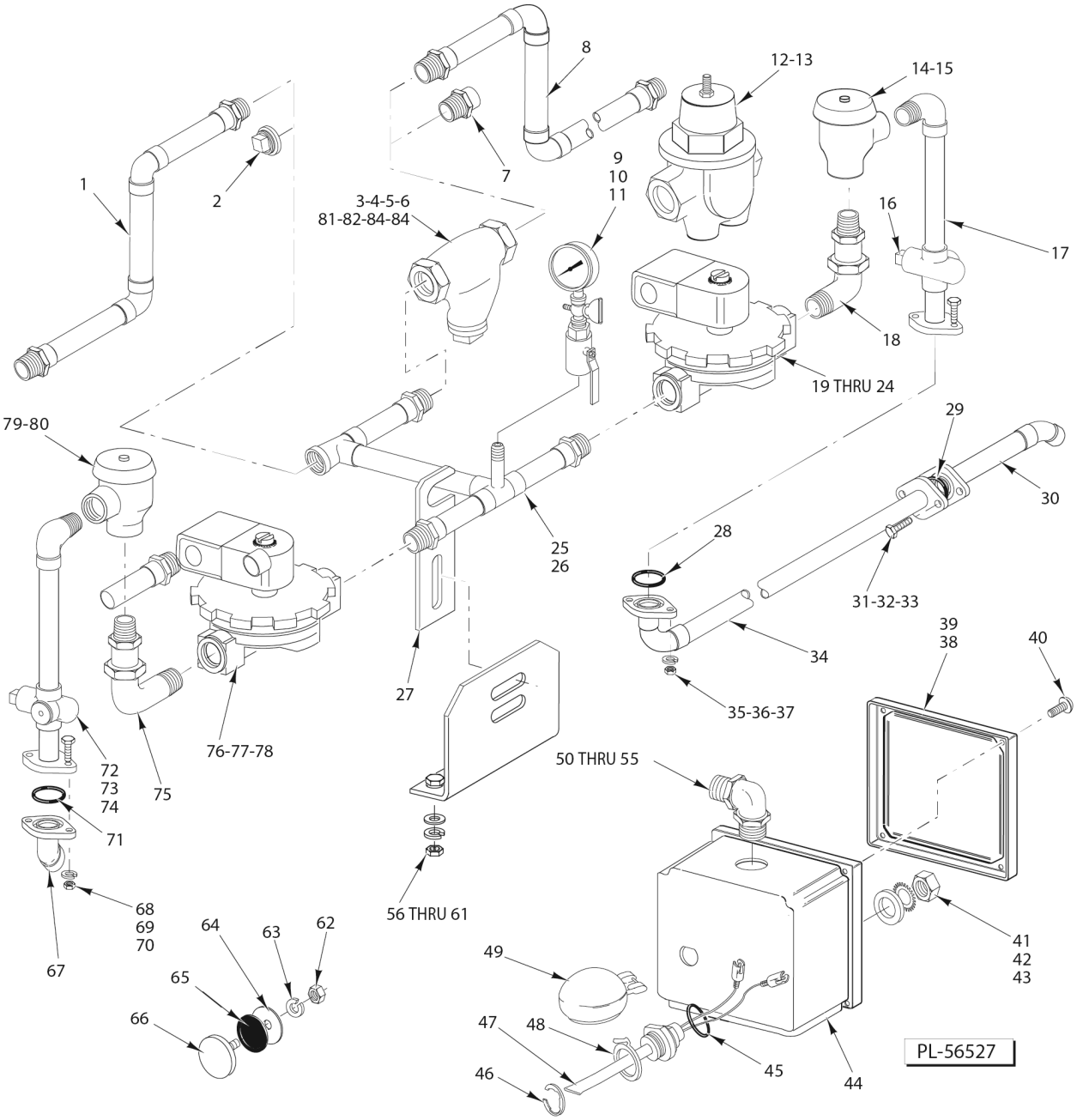

FILL PIPING
(CURRENT CONSTRUCTION)

FILL PIPING
(CURRENT CONSTRUCTION)

ILLUS. PL-56527	PART NO.	NAME OF PART	AMT.
1	00-329558	Piping - Common R-L	1
2	FP-028-19	Plug 3/4 Pipe (Use W/Separate Fill)	1
*3	00-186922	Strainer - Line (3/4 In.) (Brass) (Kitz) (Incls. Items 4, 5, & 6) (Alternate to Item 81)	1
4	00-186923	Plug - Branch	1
5	00-186924	Gasket - Branch Plug	1
6	00-186925	Screen - Line Strainer	1
7	00-123366	Union 3/4 Copper Tube x 3/4 MPT	1
8	00-329549	Piping - Common L-R	1
9	FP-028-46	Plug 1/4 Pipe (Separate Fill)	1
10	00-436319	Petcock 1/4	1
11	00-328247	Pressure Gauge - Water (Common Fill)	1
12	00-893294	Valve - Pressure Regulating (3/4 In.) Valve - Pressure Regulating	1
13	00-289091-00001	Repair Kit - Pressure Regulating Valve	1
14	00-277112-00003	Vacuum Breaker (3/4)	1
15	00-118270	Service Kit - Vacuum Breaker	1
16	FP-028-03	Plug 1/2 Pipe	1
17	00-329610-00002	Fill Piping - Outside (RH)	1
18	00-328764	Adapter Elbow 3/4 x 90 Deg	1
19	00-271002-00001	Solenoid Valve (120 V.) (Incls. Items 20 & 21)	1
20	00-271839-00001	Coil - Solenoid Valve	1
21	00-271838	Service Kit - Solenoid Valve	1
22	FE-024-65	Connector 90 Deg. (Non-Metallic) Sealtite (1/2 Male Thd. x 1/2 Flex. Cnd.)	1
23	FE-024-61	Connector 45 Deg. (Non-Metallic) Sealtite (1/2 Male Thd. x 1/2 Flex. Cnd.)	1
24	FE-024-57	Connector Straight (Non-Metallic) Sealtite (1/2 Male Thd. x 1/2 Flex. Cnd.)	2
25	00-812979-00001	Tubing - Sub-Assy. R-L	1
26	00-812979-00002	Tubing - Sub-Assy. L-R	1
27	00-435967	Plate - Fill Piping	1
28	00-067500-00012	O-Ring	2
29	00-067500-00012	O-Ring	2
30	00-289971-00002	Piping - Inside Fill (RH)	1
31	SC-041-15	Cap Screw 5/16-18 x 1 1/4 Hex Hd. (SST)	2
32	WL-006-23	Lockwasher 5/16 Helical (SST)	2
33	NS-015-11	Nut 5/16-18 Hex (SST)	2
34	00-328806	Piping - Connector (RH)	1
35	NS-015-11	Nut 5/16-18 Hex (SST)	2
36	WL-006-23	Lockwasher 5/16 Helical (SST)	2
37	SC-041-15	Cap Screw 5/16-18 x 1 1/4 Hex Hd. (SST)	2
38	00-112007	Gasket	2
39	00-288465	Lid & Gasket Assy. (Incls. Item 38)	2
40	SD-012-20	Self-Tapping Screw 8-32 x 1/2 Phil. Truss Hd., Type T	8
41	NS-018-28	Jam Nut 1/2-20 Hex (SST)	2
42	WL-014-31	Lockwasher 1/2 External Shakeproof (SST)	2
43	WS-010-40	Washer - Thrust	2
44	00-270926	Junction Box	2
45	00-067500-00072	O-Ring	2
46	RR-010-13	Retaining Ring	2
47	00-328495	Probe & Switch Assy. (2 Wire) (Water Level)	2
48	00-112467	Retainer - Float	2
49	00-122674	Float Assy	2
50	FE-024-57	Connector - Straight Sealtite (1/2 Male Thd. x 1/2 Flex. Cnd.) (LH Tank)	2
51	FE-006-45	Connector - Straight 1/2 (Thinwall) (RH Tank)	1
52	FE-024-49	Connector - Straight 1/2 (Thinwall) (RH Tank)	1
53	FE-006-05	Lock Nut 1/2 Electrical (RH Tank)	1
54	FE-008-10	Gasket (RH Tank)	2
55	FE-006-07	Lock Nut 1/2 (Cnd.) (RH Tank)	1

FILL PIPING
(CURRENT CONSTRUCTION)

ILLUS. PL-56527	PART NO.	NAME OF PART	AMT.
56	00-435974	Bracket - Fill Piping	1
57	SC-041-12	Cap Screw 5/16-18 x 7/8 Hex Hd. (SST)	2
58	SC-041-11	Cap Screw 5/16-18 x 3/4 Hex Hd. (SST)	2
59	WS-029-05	Washer (SST)	6
60	WL-006-23	Lockwasher 5/16 Helical (SST)	4
61	NS-015-11	Nut 5/16-18 Hex (SST)	4
62	NS-015-01	Nut 1/4-20 Hex (SST)	2
63	WL-006-17	Lockwasher 1/4 Medium (SST)	2
64	00-119254	Retainer - Cap	2
65	00-067500-00031	O-Ring	2
66	00-119244	Cap & Stud Assy	2
67	00-435972-00001	Piping - Inside (LH)	1
68	NS-015-11	Nut 5/16-18 Hex (SST)	2
69	WL-006-23	Lockwasher 5/16 Helical (SST)	2
70	SC-041-15	Cap Screw 5/16-18 x 1 1/4 Hex Hd. (SST)	2
71	00-067500-00012	O-Ring	2
72	00-329610-00001	Fill Piping - Outside (LH)	1
73	FP-052-07	Plug 1/2 Pipe	1
74	FE-028-03	Pipe Plug	2
75	00-328764	Adapter Elbow 3/4 x 90 Deg	1
76	00-271002-00001	Solenoid Valve 3/4 (120 V.) (Incls. Items 77 & 78)	1
77	00-271839-00001	Coil - Solenoid Valve	1
78	00-271838	Service Kit - Solenoid Valve	1
79	00-277112-00003	Vacuum Breaker (3/4)	1
80	00-118270	Service Kit - Vacuum Breaker	1
*81	00-186922	Strainer - Line (3/4 In.) (Brass) (Apollo / Conbraco) (Incls. Items 82, 83, & 84) (Alternate to Item 4)	1
82	00-749802-00001	Cap	1
83	00-749802-00002	Gasket	1
84	00-749802-00003	Screen (80 Mesh)	1

* Kitz line strainer is approx. 1/4" shorter than Apollo / Conbraco.

NOTES

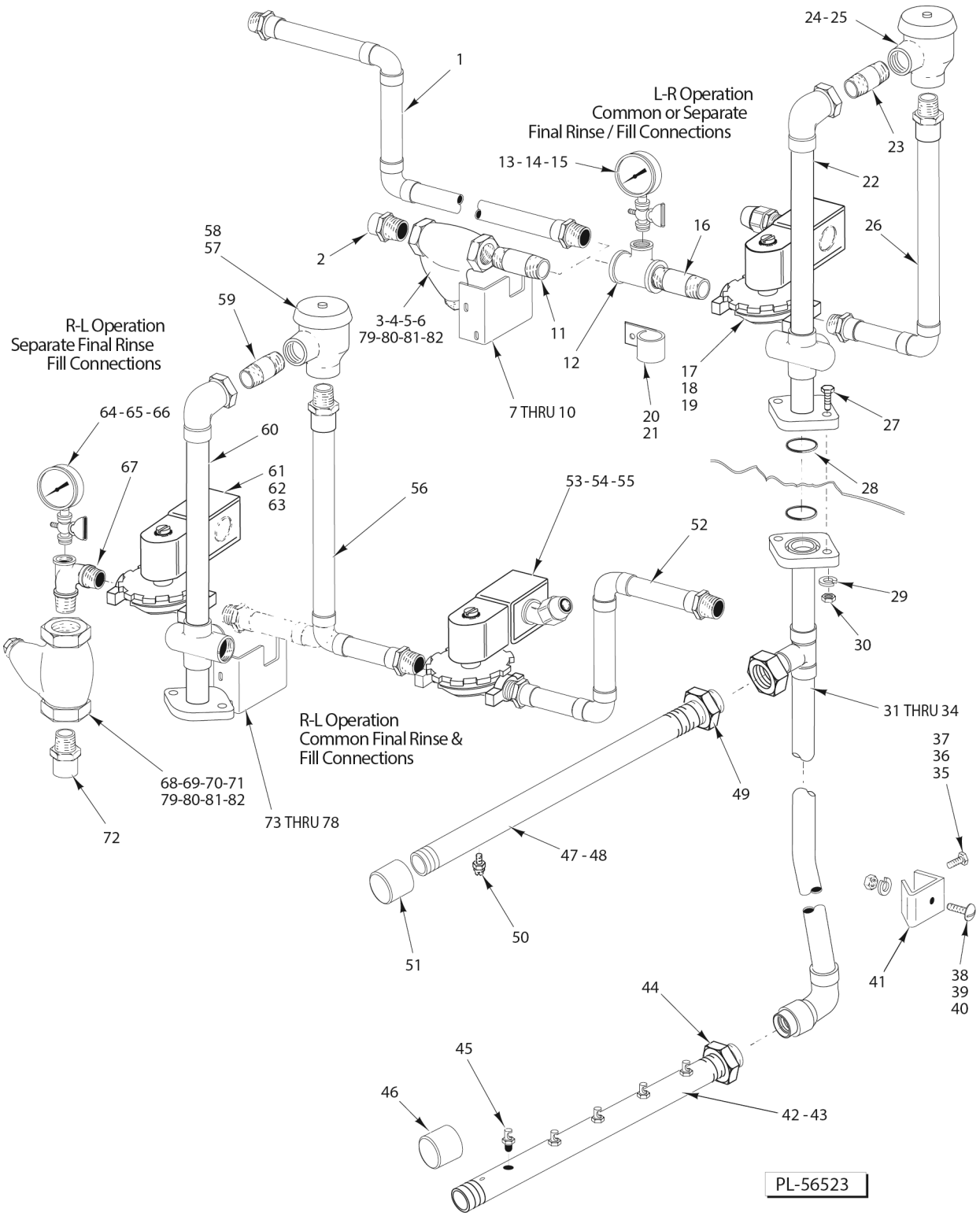

RINSE PIPING - C88A SERIES

RINSE PIPING - C88A SERIES

ILLUS. PL-56523	PART NO.	NAME OF PART	AMT.
1	00-329549	Piping - Common (R-L)	1
2	00-123366	Union 3/4 Copper Tube x 3/4 MPT	1
*3	00-186922	Strainer - Line (3/4 In.) (Brass) (Kitz) (Incls. Items 4, 5, & 6) (Alternate to Item 79)	1
4	00-186923	Plug - Branch	1
5	00-186924	Gasket - Branch Plug	1
6	00-186925	Screen - Line Strainer	1
7	00-328490	Bracket - Outside Rinse Fill Piping	1
8	WS-003-49	Washer 0.266 x 0.563 x 0.062 (SST)	2
9	WL-006-16	Lockwasher 1/4 Light (SST)	2
10	NS-015-11	Nut 1/4-20 Hex (SST)	2
11	FP-041-66	Pipe 3/4 x 3 TBE (Brass)	1
12	FP-019-86	Tee 3/4 x 3/4 x 1/4 Reducing (Brass)	1
13	00-328247	Pressure Gauge - Water (Separate Fill)	1
14	00-436319	Pet Cock 1/4	1
15	FP-028-46	Pipe Plug 1/4 Slotted Hd. (Brass)	1
16	FP-041-50	Pipe 3/4 x 13/8 Brass	1
17	00-271002-00001	Solenoid Valve 3/4 (120 V.) (Incls. Items 18 & 19)	1
18	00-271839-00001	Coil - Solenoid Valve	1
19	00-271838	Service Kit - Solenoid Valve	1
20	00-294677-00004	Clamp - Wire 1 I.D.	2
21	NS-031-15	Stop Nut - Special 10-24 Hex (SST)	2
22	00-329564-00002	Piping - Outside Final Rinse (L-R)	1
23	00-292370	Pipe 3/4 x 1 7/8 Chrome Plated	1
24	00-277112-00003	Vacuum Breaker (3/4)	1
25	00-118270	Service Kit - Vacuum Breaker	1
26	00-329566	Piping - Fill	1
27	SC-041-15	Cap Screw 5/16-18 x 1 1/4 Hex Hd. (SST)	2
28	00-067500-00012	O-Ring	2
29	WL-006-23	Lockwasher 5/16 Helical (SST)	2
30	NS-015-11	Nut 5/16-18 Hex (SST)	2
31	00-329568-00001	Final Rinse Inside Piping (R-L) (26 1/8 Door Height)	1
32	00-329568-00002	Final Rinse Inside Piping (L-R) (26 1/8 Door Height)	1
33	00-329569-00001	Final Rinse Inside Piping (R-L) (32 1/8 Door Height)	1
34	00-329569-00002	Final Rinse Inside Piping (L-R) (32 1/8 Door Height)	1
35	SC-125-28	Mach. Screw 10-24 x 1 1/2 Truss Hd. (SST)	1
36	WL-006-07	Lockwasher 10 Medium (SST)	1
37	NS-011-18	Nut 10-24 Hex (SST)	1
38	SC-127-93	Mach. Screw 5/16-18 x 1/2 Truss Hd. (SST)	1
39	WL-006-23	Lockwasher 5/16 Helical (SST)	1
40	NS-015-11	Nut 5/16-18 Hex (SST)	1
41	00-274058	Bracket	1
42	00-271027-00002	Lower Rinse Arm (L-R) 5 Nozzles (Incls. Items 44, 45, & 46)	1
43	00-271027-00001	Lower Rinse Arm (R-L) 5 Nozzles (Incls. Items 44, 45, & 46)	1
44	FP-030-27	Lock Nut 1/2 NPSL Pipe (Brass)	1
45	00-022731-00006	Nozzle - Rinse (SST) (0.035 Dia. Orifice)	5
46	FP-029-08	Pipe Cap 1/2 (Brass)	1
47	00-271088-00002	Upper Rinse Arm (L-R) 6 Nozzles (Incls. Items 49, 50, & 51)	1
48	00-271088-00001	Upper Rinse Arm (R-L) 6 Nozzles (Incls. Items 49, 50, & 51)	1
49	FP-030-27	Lock Nut 1/2 NPSL Pipe (Brass)	1
50	00-081812	Nozzle - Rinse (Brass) (0.078 Dia. Orifice)	6
51	FP-029-08	Pipe Cap 1/2 (Brass)	1
52	00-329558	Piping - Common (R-L)	1
53	00-271002-00001	Solenoid Valve 1/2 (120 V.) (Incls. Items 54 & 55)	1
54	00-271839-00001	Coil - Solenoid Valve	1
55	00-271838	Service Kit - Solenoid Valve	1

RINSE PIPING - C88A SERIES

ILLUS. PL-56523	PART NO.	NAME OF PART	AMT.
56	00-329566	Piping - Fill	1
57	00-277112-00003	Vacuum Breaker (3/4)	1
58	00-118270	Service Kit - Vacuum Breaker	1
59	00-292370	Pipe 3/4 x 1 7/8 (Chrome Plated)	1
60	00-329564-00001	Piping - Outside Final Rinse (R-L)	1
61	00-271002-00001	Solenoid Valve 3/4 (120 V.) (Incls. Items 62 & 63)	1
62	00-271839-00001	Coil - Solenoid Valve	1
63	00-271838	Service Kit - Solenoid Valve	1
64	00-328247	Pressure Gauge - Water (Separate Fill)	1
65	00-436319	Pet Cock 1/4	1
66	FP-028-46	Pipe Plug 1/4 Slotted Hd. (Brass)	1
67	00-119066	Pressure Gauge Tee	1
*68	00-186922	Strainer - Line (3/4 In.) (Brass) (Kitz) (Incls. Items 69, 70, & 71) (Alternate to Item 79)	1
69	00-186923	Plug - Branch	1
70	00-186924	Gasket - Branch Plug	1
71	00-186925	Screen - Line Strainer	1
72	00-123366	Union 3/4 Copper Tube x 3/4 MPT	1
73	00-328490	Bracket - Outside Rinse Fill Piping	1
74	WS-003-49	Washer (SST)	2
75	WL-006-22	Lockwasher 5/16 Light (SST)	2
76	NS-015-01	Nut 1/4-20 Hex (SST)	2
77	FE-024-57	Connector Straight (Non-Metallic) Sealtite (1/2 Male Thd. x 1/2 Flex. Cnd.)	1
78	FE-024-61	Connector 45 Deg. (Non-Metallic) Sealtite (1/2 Male Thd. x 1/2 Flex. Cnd.)	1
*79	00-186922	Strainer - Line (3/4 In.) (Brass) (Apollo / Conbraco) (Incls. Items 80, 81, & 82) (Alternate to Items 3 & 68)	1
80	00-749802-00001	Cap	1
81	00-749802-00002	Gasket	1
83	00-749802-00003	Screen (80 Mesh)	1

* Kitz line strainer is approx. 1/4" shorter than Apollo / Conbraco.

NOTES

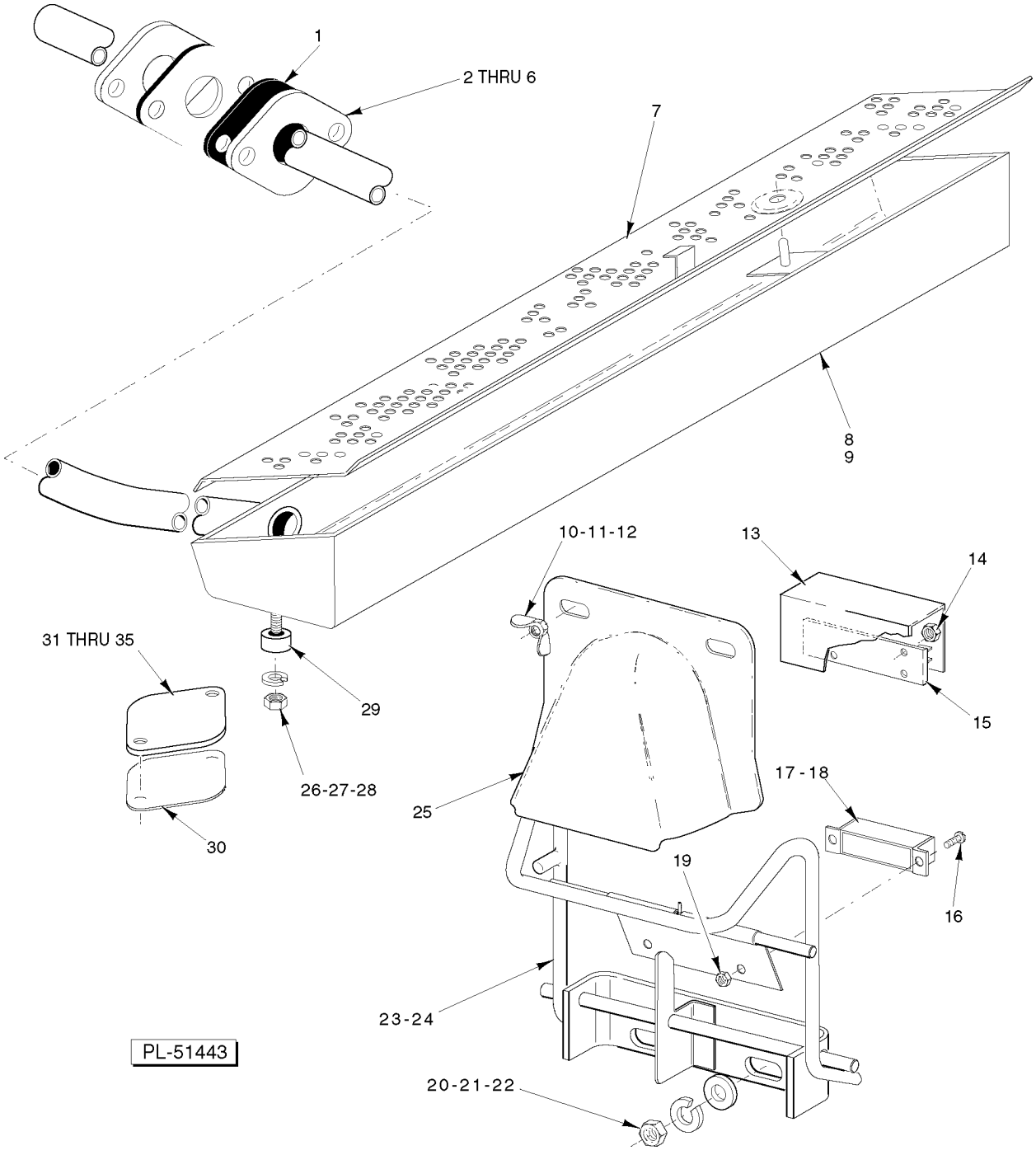

ACTUATOR MECHANISM AND RINSE DRAIN-OFF PAN

ACTUATOR MECHANISM AND RINSE DRAIN-OFF PAN

ILLUS. PL-51443	PART NO.	NAME OF PART	AMT.
1	00-436827	Gasket (C88A Series Only.)	2
2	00-122402-00004	Flange (C88A Series Only.)	2
3	SC-041-13	Cap Screw 5/16-18 x 1 Hex Hd. (SST) (C88A Series Only.)	2
4	WS-017-08	Washer (SST) (C88A Series Only.)	2
5	WL-006-23	Lockwasher 5/16 Medium (SST) (C88A Series Only.)	2
6	NS-015-11	Nut 5/16-18 Hex (SST) (C88A Series Only.)	2
7	00-812922-00001	Strainer (C88A Series Only.)	1
8	00-329579-00002	Rinse Pan Assy. (R-L) (C88A Series Only.)	1
9	00-329579-00001	Rinse Pan Assy. (L-R) (C88A Series Only.)	1
10	NS-029-01	Wing Nut 1/4-20 (SST)	AR
11	WS-017-06	Washer (SST)	AR
12	WL-006-17	Lockwasher 1/4 Medium (SST)	AR
*13	00-270996	Insulator - Switch	1
*14	NS-031-50	Stop Nut 6-32 Hex (SST)	2
*15	00-892896	Kit - Service Reed Switch	1
*16	SC-127-26	Mach. Screw 6-32 x 3/8 Phil. Rd. Hd. (SST)	2
*17	00-290160	Magnet	1
*18	00-290159	Retainer - Magnet	1
*19	NS-031-50	Stop Nut 6-32 Hex (SST)	2
*20	NS-015-11	Nut 5/16-18 Hex (SST)	2
*21	WL-006-23	Lockwasher 5/16 Helical (SST)	2
*22	WS-017-08	Washer (SST)	2
*23	00-436027	Actuator (L-R)	1
*24	00-436955	Actuator (R-L)	1
25	00-436835	Shroud	AR
26	NS-015-01	Nut 1/4-20 Hex (SST) (C88A Series Only.)	2
27	WL-006-17	Lockwasher 1/4 Medium (SST) (C88A Series Only.)	2
28	WS-003-49	Washer (SST) (C88A Series Only.)	2
29	00-329582	Spacer (C88A Series Only.)	2
30	00-276407	Gasket - Rinse Pipe	2
31	00-122402-00002	Flange	2
32	SC-041-10	Cap Screw 5/16-18 x 5/8 Hex Hd. (SST)	4
33	WS-029-05	Washer (SST)	4
34	WL-006-23	Lockwasher 5/16 Helical (SST)	4
35	NS-015-11	Nut 5/16-18 Hex (SST)	4

* Quantities listed are for 20 x 20 racks.

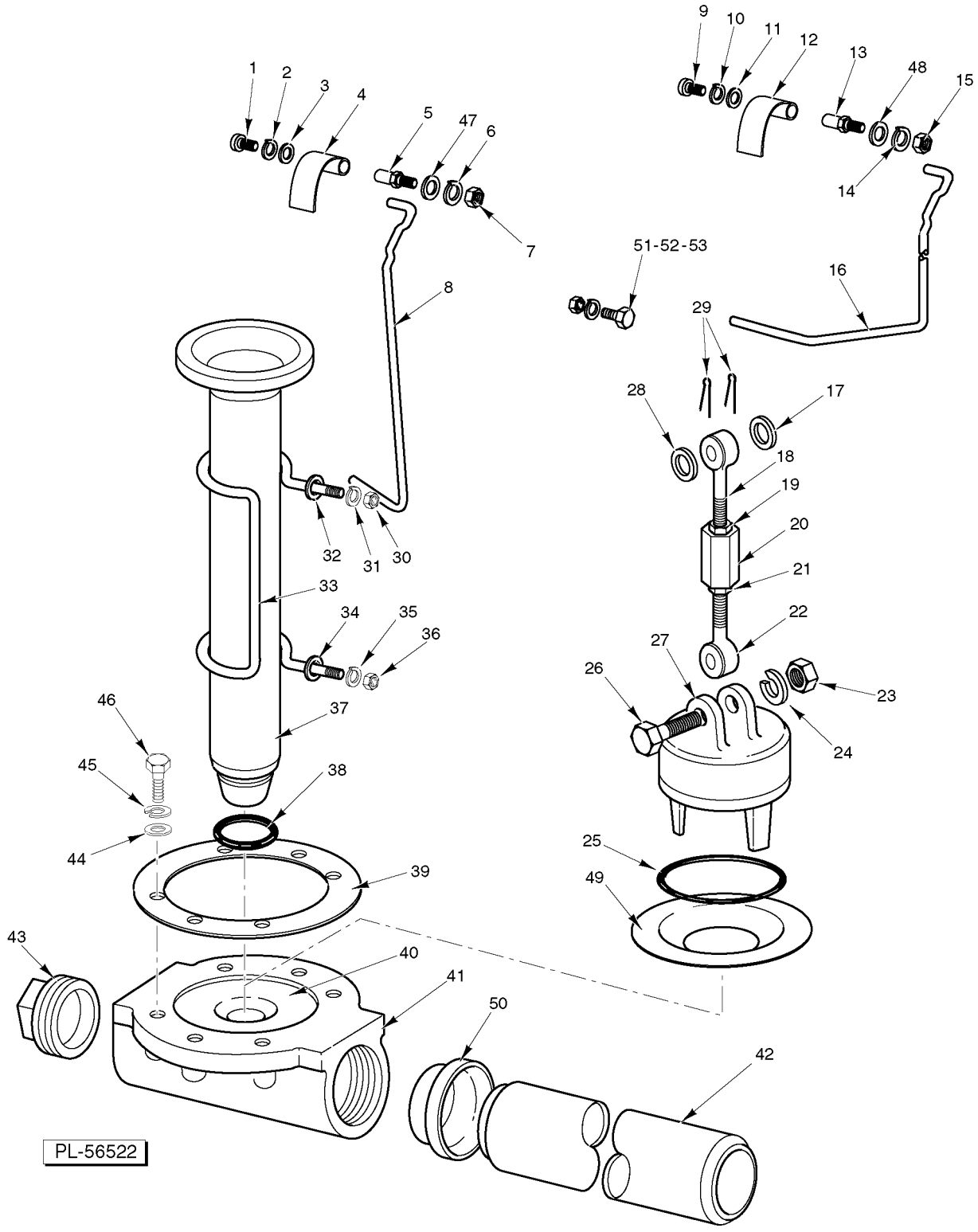

DRAIN UNIT
(WASH/RINSE SECTION)

DRAIN UNIT
(WASH/RINSE SECTION)

ILLUS. PL-56522	PART NO.	NAME OF PART	AMT.
1	SC-114-15	Mach. Screw 10-24 x 3/8 Rd. Hd. (SST)	2
2	WL-006-07	Lockwasher #10 Medium (SST)	2
3	WS-019-06	Washer (SST)	2
4	00-271070	Drain Lever	2
5	00-119116	Axle - Drain Lever	2
6	WL-006-17	Lockwasher 1/4 Medium (SST)	2
7	NS-015-01	Nut -20 Hex (SST)	2
8	00-270953	Lift Rod Overflow	2
*9	SC-114-15	Mach. Screw 10-24 x 3/8 Rd. Hd. (SST)	2
*10	WL-006-07	Lockwasher #10 Medium (SST)	2
*11	WS-019-06	Washer (SST)	2
*12	00-271070	Drain Lever	2
*13	00-119116	Axle - Drain Lever	2
*14	WL-006-17	Lockwasher 1/4 Medium (SST)	2
*15	NS-015-01	Nut 1/4-20 Hex (SST)	2
*16	00-473013	Lift Rod - Drain	2
*17	WS-017-08	Washer (SST)	2
*18	00-079410	Pull Rod - Upper	2
*19	NS-018-06	Jam Nut 5/16-18 Hex (SST)	2
*20	00-016269	Nut - Pull Rod Adjustor	2
*21	NS-018-06	Jam Nut 5/16-18 Hex (SST)	2
*22	00-473014	Pull Rod Assy. - Lower	2
*23	NS-015-11	Nut 5/16-18 Hex (SST)	2
*24	WL-006-23	Lockwasher 5/16 Helical (SST)	2
*25	00-067500-00118	O-Ring	2
*26	SC-041-17	Cap Screw 5/16-18 x 1-1/2 Hex Hd. (SST)	2
*27	00-077466	Plug - Drain	2
*28	WS-017-08	Washer (SST)	2
*29	PC-005-02	Cotter Pin 1/16 x 1/2 (SST)	4
30	NS-015-11	Nut 5/16-18 Hex (SST)	4
31	WL-006-23	Lockwasher 5/16 Helical (SST)	2
32	WS-017-01	Washer (SST)	4
33	00-270952	Retainer	2
34	WS-017-01	Washer (SST)	4
35	WL-006-23	Lockwasher 5/16 Helical (SST)	2
36	NS-015-11	Nut 5/16-18 Hex (SST)	4
37	00-119099-00002	Tube - Overflow	2
38	00-067500-00120	O-Ring	2
39	00-289464	Gasket - Drain	2
40	00-270947	Sleeve - Drain Body	2
41	00-289465	Drain Body	2
42	00-274132-00006	Drain Pipe - Wash/Rinse Section	1
43	FP-028-32	Pipe Plug 2 In. Sq. Hd	1
44	WS-006-44	Washer (SST)	12
45	WL-006-28	Lockwasher 3/8 Medium (SST)	12
46	SC-041-28	Cap Screw 3/8-16 x 3/4 Hex Hd. (SST)	12
47	WS-022-01	Washer (SST)	2
*48	WS-022-01	Washer (SST)	2
*49	00-106283	Sleeve - Drain Valve Body	2
50	00-328813	Bushing - Drain	2
*51	SC-041-10	Cap Screw 5/16-18 x 5/8 Hex Hd. (SST)	4
*52	WL-006-23	Lockwasher 5/16 Helical (SST)	4
*53	NS-015-11	Nut 5/16-18 Hex (SST)	4

* Use in Wash/Rinse on Machines with RS, CS, or PW.

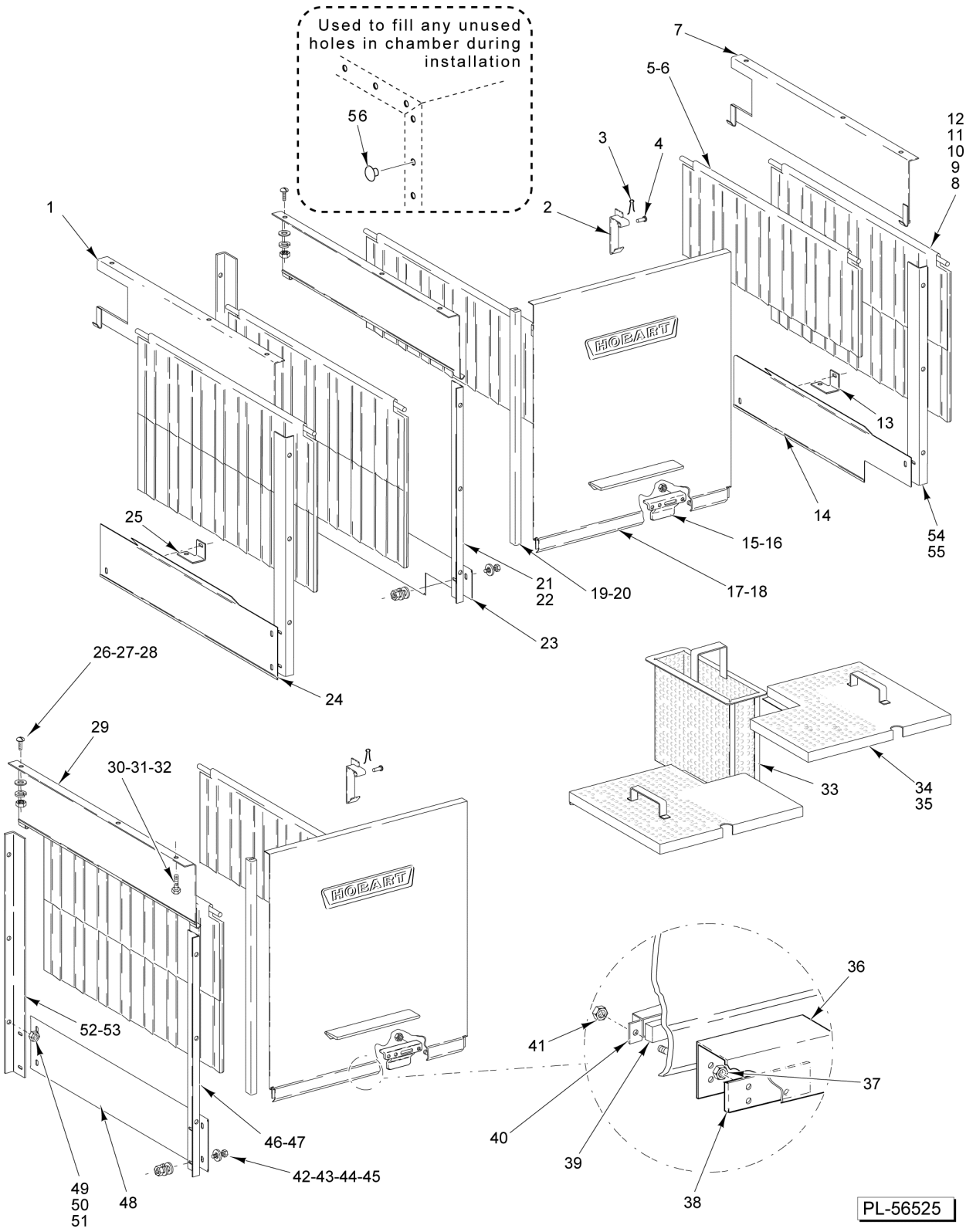

DOORS, CURTAINS, BAFFLES, AND STRAINERS

DOORS, CURTAINS, BAFFLES, AND STRAINERS

ILLUS. PL-56525	PART NO.	NAME OF PART	AMT.
1	00-271047-00001	Baffle - RH (LH Chamber)	1
2	00-185864	Catch - Door	2
3	PC-005-02	Cotter Pin 1/16 x 1/2 (SST)	2
4	00-012114	Pin	2
5	00-120266-00001	Curtain Rod	3
6	00-120151-00001	Splash Curtain (10-C1)	3
7	00-271046-00002	Baffle - RH (RH Chamber)	1
8	00-120266-00001	Curtain Rod	4
9	00-271084-00002	Splash Curtain (32-1/8 Door Height)	4
10	00-271084	Splash Curtain (26-1/8 Door Height)	4
11	00-120152-00055	Splash Curtain Assy. (26-1/8 Door Height) (Incls. Items 8 & 10)	AR
12	00-120152-00056	Splash Curtain Assy. (32-1/8 Door Height) (Incls. Items 8 & 9)	AR
13	00-271834	Bracket	1
14	00-329843	Baffle (RH Lower) (Rinse Section)	1
15	00-328065	Actuator - Drain	2
16	NS-031-21	Stop Nut 1/4-20 Hex (SST)	8
17	00-328064-00007	Door (26-1/8)	2
18	00-328079-00007	Door (32-1/8)	2
19	00-112378-00049	Door Slide (26-1/8 Door Height)	4
20	00-112378-00050	Door Slide (32-1/8 Door Height)	4
21	00-329846-00001	Baffle - Vertical (26-1/8 Door Height) (Rinse Section; LH Front)	1
22	00-329845-00001	Baffle - Vertical (32-1/8 Door Height) (Rinse Section; LH Front)	1
23	00-329844	Baffle - LH Lower (Rinse Section)	1
24	00-271833	Baffle - RH Lower (Wash Section)	1
25	00-271834	Bracket	1
26	SC-053-41	Mach. Screw 1/4-20 x 1/2 Slotted Truss Hd. (SST)	8
27	WL-006-17		8
28	NS-015-01	Nut 1/4-20 Hex (SST)	8
29	00-271048-00002	Baffle (LH) (Wash & Rinse Sections)	2
30	WS-022-01	Washer (SST)	4
31	WL-006-17	Lockwasher 1/4 Helical (SST)	4
32	NS-015-01	Nut 1/4-20 Hex (SST)	4
33	00-271100	Bucket - Strainer	2
34	00-271845	Strainer - Front	2
35	00-271847	Strainer - Rear	2
36	00-270996	Insulator - Switch	2
37	NS-031-50	Stop Nut 6-32 Hex (SST)	4
38	00-892896	Kit - Service Reed Switch	2
39	00-290160	Magnet	2
40	00-290159	Retainer - Magnet	2
41	NS-031-50	Stop Nut 6-32 Hex (SST)	4
42	SC-041-05	Cap Screw 1/4-20 x 5/8 Hex Hd. (SST)	14
43	WS-017-06	Washer (SST)	28
44	WL-006-17	Lockwasher 1/4 Helical (SST)	14
45	NS-015-01	Nut 1/4-20 Hex (SST)	14
46	00-271049-00001	Baffle - Vertical (26-1/8 Door Height) (Wash Section, LH Front)	1
47	00-274720-00001	Baffle - Vertical (32-1/8 Door Height) (Wash Section, LH Front)	1
48	00-271832	Baffle - LH Lower	1
49	WS-022-01	Washer (SST)	18
50	WL-006-17	Lockwasher 1/4 Helical (SST)	18
51	NS-015-01	Nut 1/4-20 Hex (SST)	18
52	00-271049-00001	Baffle - Vertical (26-1/8 Door Height)	2
53	00-274720-00001	Baffle - Vertical (32-1/8 Door Height)	2
54	00-329846-00001	Baffle - Vertical (26-1/8 Door Height) (Rinse Section; LH Rear & RH Front)	2
55	00-329845-00001	Baffle - Vertical (32-1/8 Door Height) (Rinse Section; LH Rear & RH Front)	2
56	00-289082	Kit - Plug (Incls. 30 Plugs & RTV)	AR

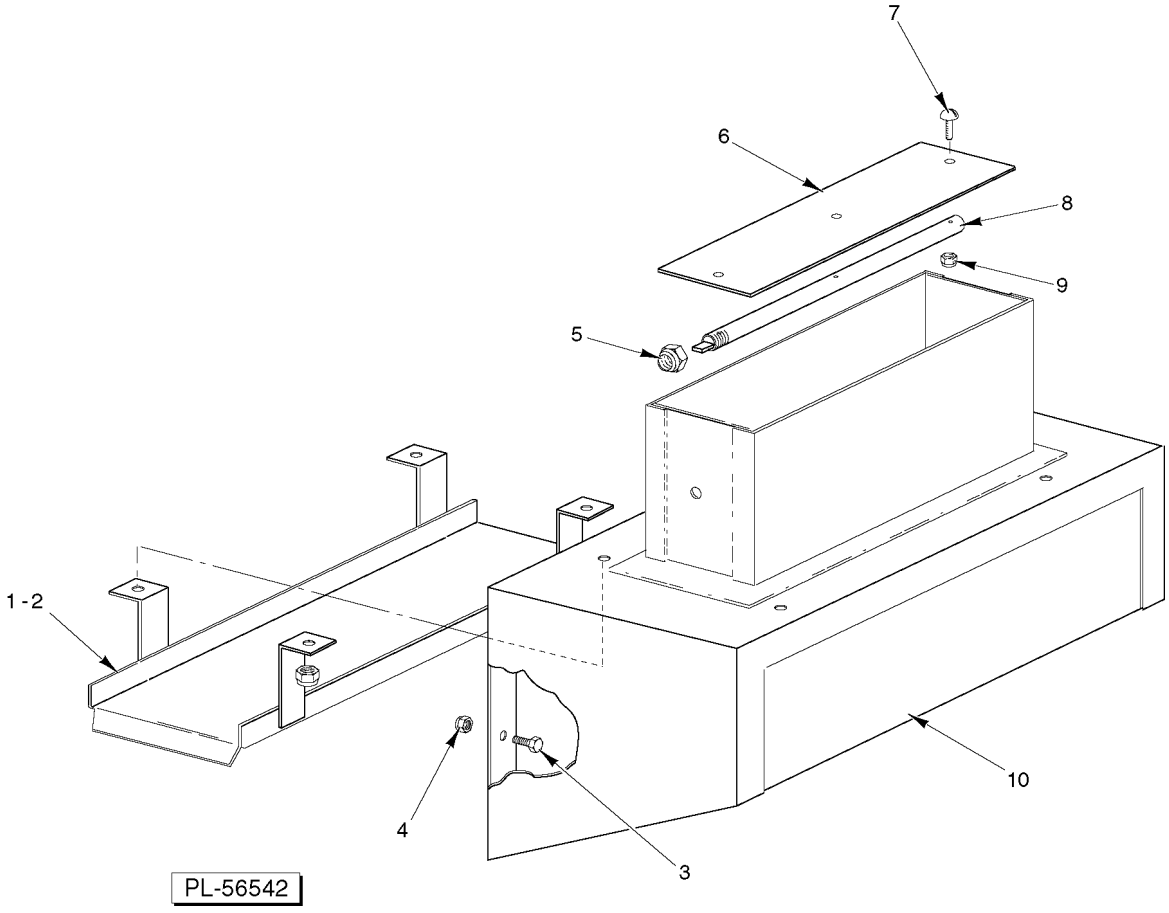

VENT HOOD

VENT HOOD

ILLUS. PL-56542	PART NO.	NAME OF PART	AMT.
1	00-435799	Drip Shield Assy	1
2	NS-031-15	Stop Nut - Special 10-24 Hex (SST)	4
3	SC-041-05	Cap Screw 1/4-20 x 5/8 Hex Hd. (SST)	11
4	NS-031-19	Stop Nut 1/4-20 Elastic (SST)	11
5	NS-036-12	Stop Nut 3/8-24 Elastic (SST)	1
6	00-075623	Damper - Vent Stack	1
7	SC-125-25	Mach. Screw 6-32 x 3/4 Phil. Rd. Hd. (SST)	3
8	00-064919	Shaft - Damper	1
9	NS-031-50	Stop Nut 6-32 Hex (SST)	3
10	00-435794-00001	Vent Hood Assy. (Incls. Items 1, 2, & 5 thru 9)	1

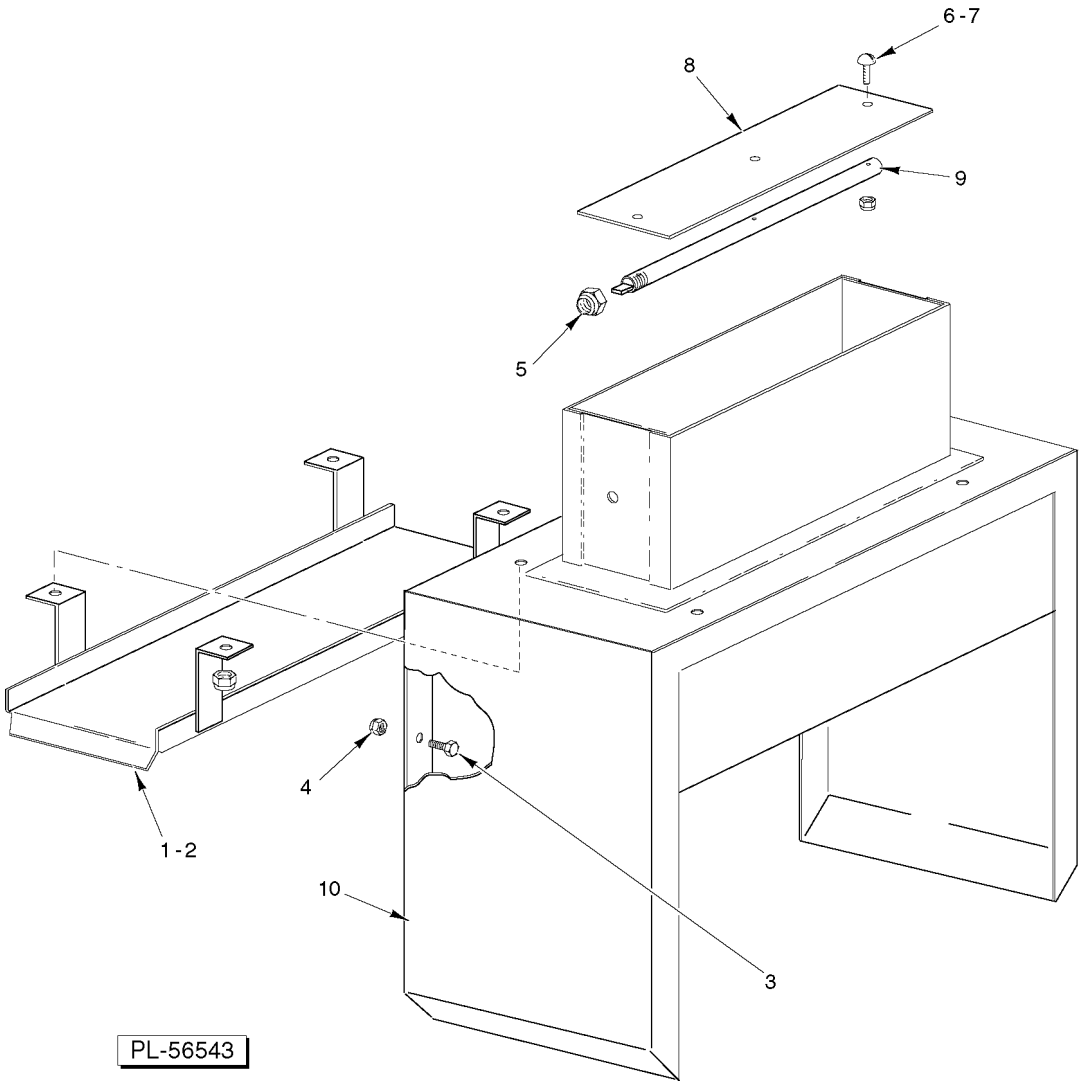

EXTENDED HOOD

EXTENDED HOOD

ILLUS. PL-56543	PART NO.	NAME OF PART	AMT.
1	00-435799	Drip Shield Assy	1
2	NS-031-15	Stop Nut - Special 10-24 Hex (SST)	4
3	SC-041-05	Cap Screw 1/4-20 x 5/8 Hex Hd. (SST)	11
4	NS-031-19	Stop Nut 1/4-20 Elastic (SST)	11
5	NS-036-12	Stop Nut 3/8-24 Elastic (SST)	1
6	SC-125-25	Mach. Screw 6-32 x 3/4 Phil. Rd. Hd. (SST)	3
7	NS-031-50	Stop Nut 6-32 Hex (SST)	3
8	00-075623	Damper - Vent Stack	1
9	00-064919	Shaft - Damper	1
10	00-328743-00001	Extended Hood Assy. (Incls. Items 1, 2, & 5 thru 9)	1

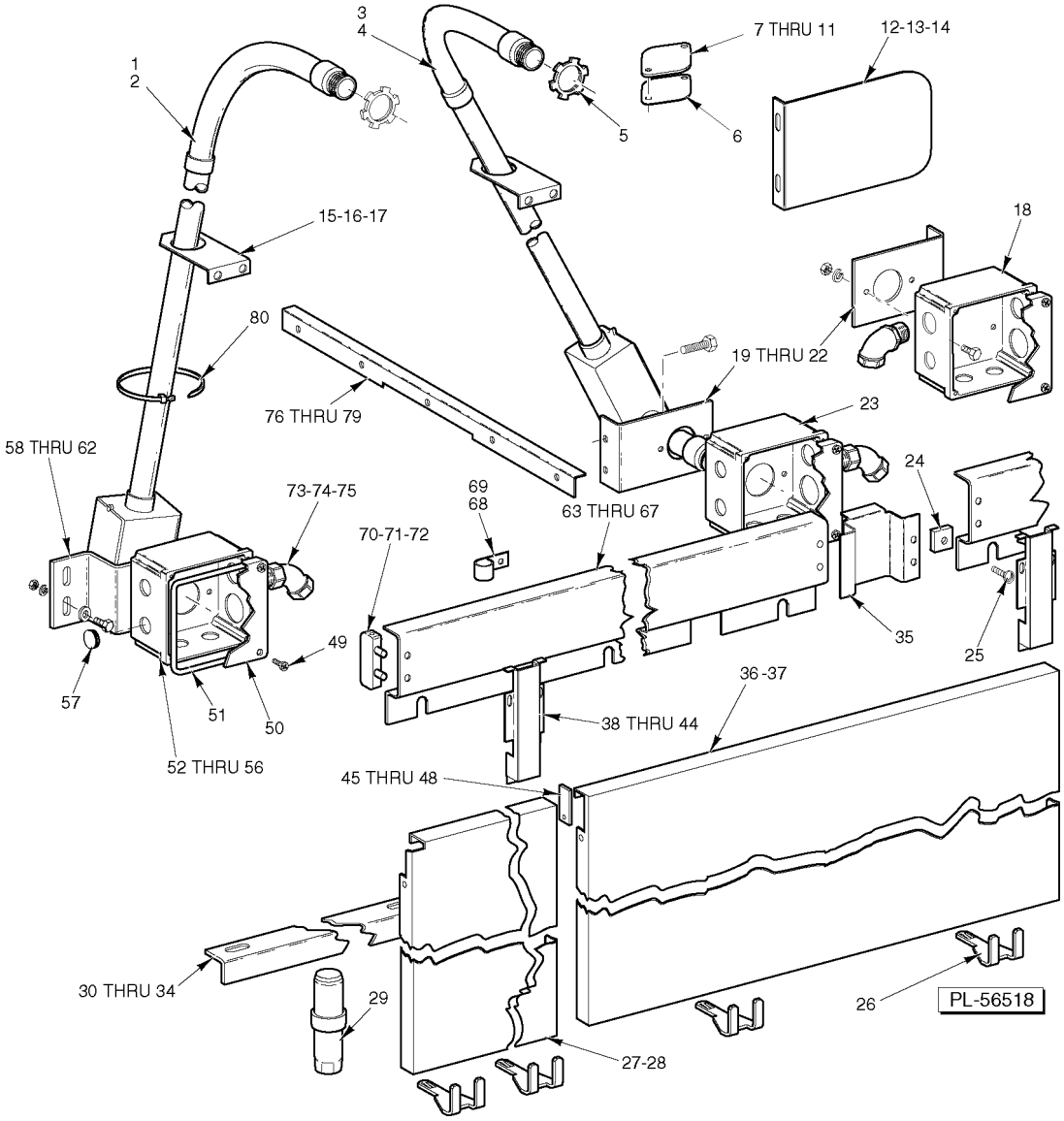

MISCELLANEOUS
(WASH/RINSE SECTION)

MISCELLANEOUS
(WASH/RINSE SECTION)

ILLUS. PL-56518	PART NO.	NAME OF PART	AMT.
1	00-274232	Conduit - PVC (26 1/8 Door Height) (LH)	1
2	00-274709	Conduit - PVC (32 1/8 Door Height) (LH)	1
3	00-329585-00001	Conduit - PVC (26 1/8 Door Height) (RH)	1
4	00-329585-00002	Conduit - PVC (32 1/8 Door Height) (RH)	1
5	FE-009-07	Lock Nut 1 1/4	4
6	00-122402-00002	Flange	3
7	00-276407	Gasket - Rinse Pipe	3
8	SC-041-12	Cap Screw 5/16-18 x 7/8 Hex Hd. (SST)	6
9	WS-029-05	Washer (SST)	6
10	WL-006-23	Lockwasher 5/16 Helical (SST)	6
11	NS-015-11	Nut 5/16-18 Hex (SST)	6
12	00-287625	Splash Shield	2
13	SC-066-06	Mach. Screw 10-24 x 1/2 Truss Hd. (SST)	4
14	NS-031-15	Stop Nut - Special 10-24 Hex (SST)	4
15	SC-041-50	Cap Screw 1/4-20 x 1/2 Hex Hd. (SST)	4
16	WL-006-17	Lockwasher 1/4 Medium (SST)	4
17	NS-015-01	Nut 1/4-20 Hex (SST)	4
18	00-270923-00002	Box - Junction (RH)	1
19	00-270925	Bracket - Center & RH Junction Boxes	2
20	SC-041-12	Cap Screw 5/16-18 x 7/8 Hex Hd. (SST)	4
21	WL-006-23	Lockwasher 5/16 Helical (SST)	4
22	NS-015-11	Nut 5/16-18 Hex (SST)	4
23	00-270923-00001	Box - Junction	1
24	00-072937	Speed Nut 4-40	2
25	SC-127-55	Mach. Screw 4-40 x 3/8 Rd. Hd. (SST)	2
26	00-271061	Support	4
27	00-329121-00001	Panel - Front Trim (CCS110A/W; L-R)	1
28	00-329121-00002	Panel - Front Trim (CCS110A/W; R-L)	1
29	00-288946-00002	Foot - Adjustable	6
30	00-274092-00003	Strut - Tank to Tank	2
31	SC-041-11	Cap Screw 5/16-18 x 3/4 Hex Hd. (SST)	4
32	WS-017-01	Washer (SST)	4
33	WL-006-23	Lockwasher 5/16 Helical (SST)	4
34	NS-015-11	Nut 5/16-18 Hex (SST)	4
35	00-274252	Wire - Raceway	1
36	00-436798	Panel - Front Trim (C88A/W, CRS110A/W, & CPW124A/W)	2
37	00-436798	Panel - Front Trim (CCS110A & CCS110W)	1
38	00-271055	Wireway - Vertical	3
39	SC-114-15	Mach. Screw 10-24 x 3/8 Rd. Hd. (SST)	3
40	WS-019-06	Washer (SST)	3
41	WL-006-07	Lockwasher #10 Medium (SST)	3
42	WS-017-06	Washer (SST)	6
43	WL-006-17	Lockwasher 1/4 Medium (SST)	6
44	NS-015-01	Nut 1/4-20 Hex (SST)	6
45	00-436888	Cover - Panel Notch	2
46	SC-066-05	Mach. Screw 10-24 x 3/8 Phil. Truss Hd. (SST)	2
47	WS-019-06	Washer (SST)	2
48	NS-031-16	Stop Nut 10-24 Elastic (SST)	2
49	SD-012-20	Self-Tapping Screw 8-32 x 1/2 Phil. Truss Hd., Type T	12
50	00-288465	Lid & Gasket Assy. (Incls. Item 46)	3
51	00-112007	Gasket	3
52	00-270923-00001	Box - Junction (LH)	1
53	SC-041-05	Cap Screw 1/4-20 x 5/8 Hex Hd. (SST)	6
54	WS-003-49	Washer (SST)	6
55	WL-006-17	Lockwasher 1/4 Medium (SST)	6

MISCELLANEOUS
(WASH/RINSE SECTION)

ILLUS. PL-56518	PART NO.	NAME OF PART	AMT.
56	NS-015-01	Nut 1/4-20 Hex (SST)	6
57	PB-004-08	Plug Button Heyco 2703	AR
58	00-270922	Bracket (LH)	1
59	SC-041-12	Cap Screw 5/16-18 x 7/8 Hex Hd. (SST)	2
60	WS-017-08	Washer (SST)	2
61	WL-006-23	Lockwasher 5/16 Helical (SST)	2
62	NS-015-11	Nut 5/16-18 Hex (SST)	2
63	00-271056	Wireway - Horizontal (LH)	1
64	00-329588	Wireway - Horizontal (RH)	1
65	WS-017-06	Washer (SST)	6
66	WL-006-17	Lockwasher 1/4 Medium (SST)	6
67	NS-015-01	Nut 1/4-20 Hex (SST)	6
68	00-294677-00003	Clamp - Wire 3/4 I.D.	12
69	NS-047-94	Nut Lock Special 3/16 Stud (SST)	12
70	00-813488	Cap - Wireway	2
71	SC-127-55	Mach. Screw 4-40 x 3/8 Rd. Hd. (SST)	2
72	00-072937	Speed Nut 4-40	2
73	FE-024-62	Connector - Conduit 3/4 (45 Deg.)	3
74	FE-006-06	Lock Nut 3/4	3
75	FE-024-58	Connector - Conduit 3/4 TS	3
76	00-274103	Support - Tank	1
77	SC-041-05	Cap Screw 1/4-20 x 5/8 Hex Hd. (SST)	5
78	WL-006-17	Lockwasher 1/4 Medium (SST)	5
79	NS-015-01	Nut 1/4-20 Hex (SST)	5
80	00-113703	Cable Tie	AR

NOTES

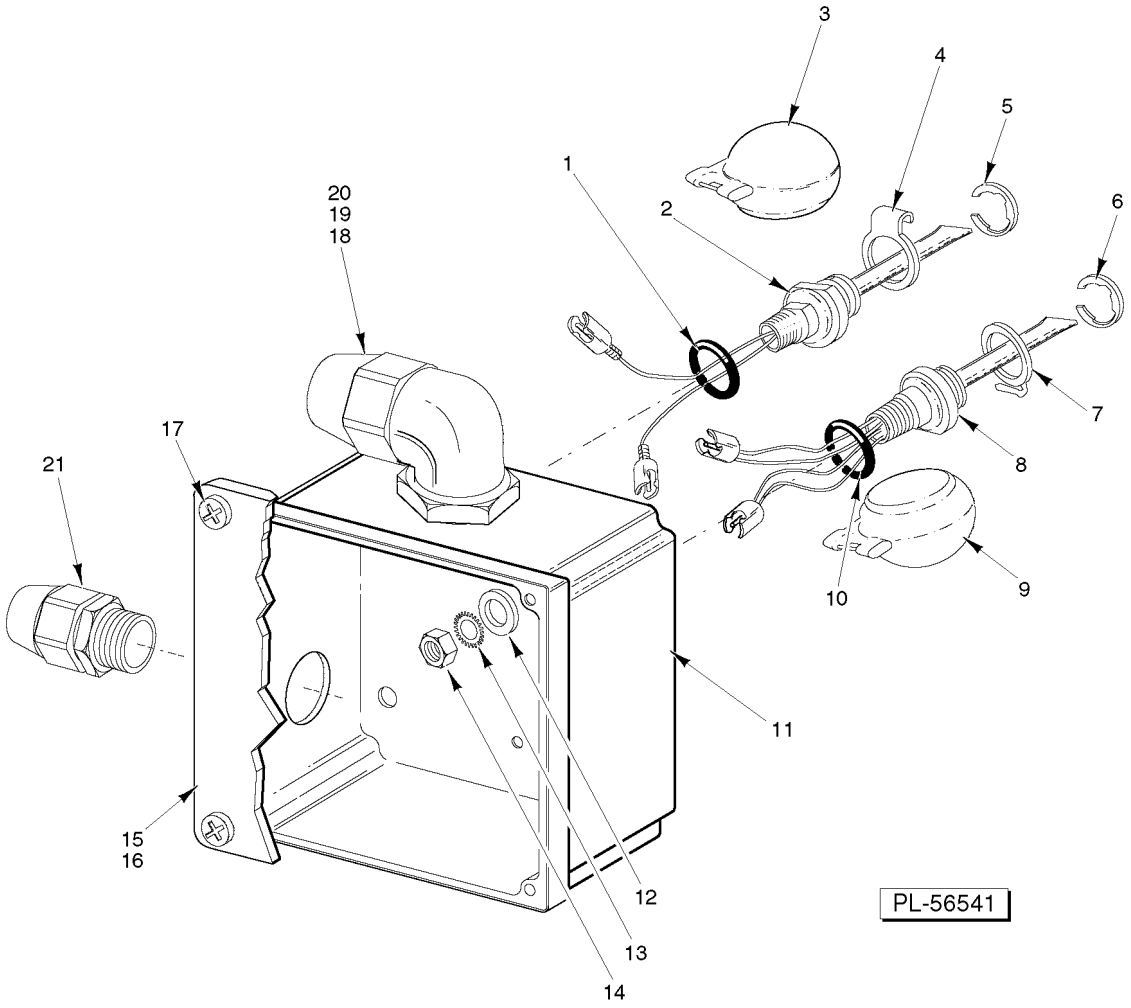

LOW WATER PROTECTION
(STEAM HEAT/WASH & RINSE TANK)
(2 UNITS REQ'D)

LOW WATER PROTECTION
(STEAM HEAT/WASH & RINSE TANK)
(2 UNITS REQ'D)

ILLUS. PL-56541	PART NO.	NAME OF PART	AMT.
1	00-067500-00072	O-Ring	1
2	00-328486	Probe & Switch Assy. (2 Wire) (Water Level)	1
3	00-122674	Float Assy	1
4	00-112467	Retainer - Float	1
5	RR-010-13	Retaining Ring	1
6	RR-010-13	Retaining Ring	1
7	00-112467	Retainer - Float	1
8	00-271621	Switch & Probe Assy. (4-Wire) (Long)	1
9	00-122674	Float Assy	1
10	00-067500-00072	O-Ring	1
11	00-271112-00001	Box - Steam Heat	1
12	WS-010-40	Washer - Thrust	2
13	WL-014-31	Lockwasher 1/2 External Shakeproof (SST)	2
14	NS-018-28	Jam Nut 1/2-20 Hex (SST)	2
15	00-288465	Lid & Gasket Assy. (Incls. Item 16)	1
16	00-112007	Gasket	1
17	SD-012-20	Self-Tapping Screw 8-32 x 1/2 Phil. Truss Hd., Type T	4
18	FE-024-67	Connector 90 Deg. (Non-Metallic) Sealtite (1 Male Thd. x 1 Flex. Cnd.)	2
19	FE-008-12	Gasket	1
20	FE-006-50	Lock Nut (Electrical)	1
21	FE-024-57	Connector Straight (Non-Metallic) Sealtite (1/2 Male Thd. x 1/2 Flex. Cnd.)	2
	00-294357-00001	Connector	1
	00-294357-00002	Connector (Black)	1

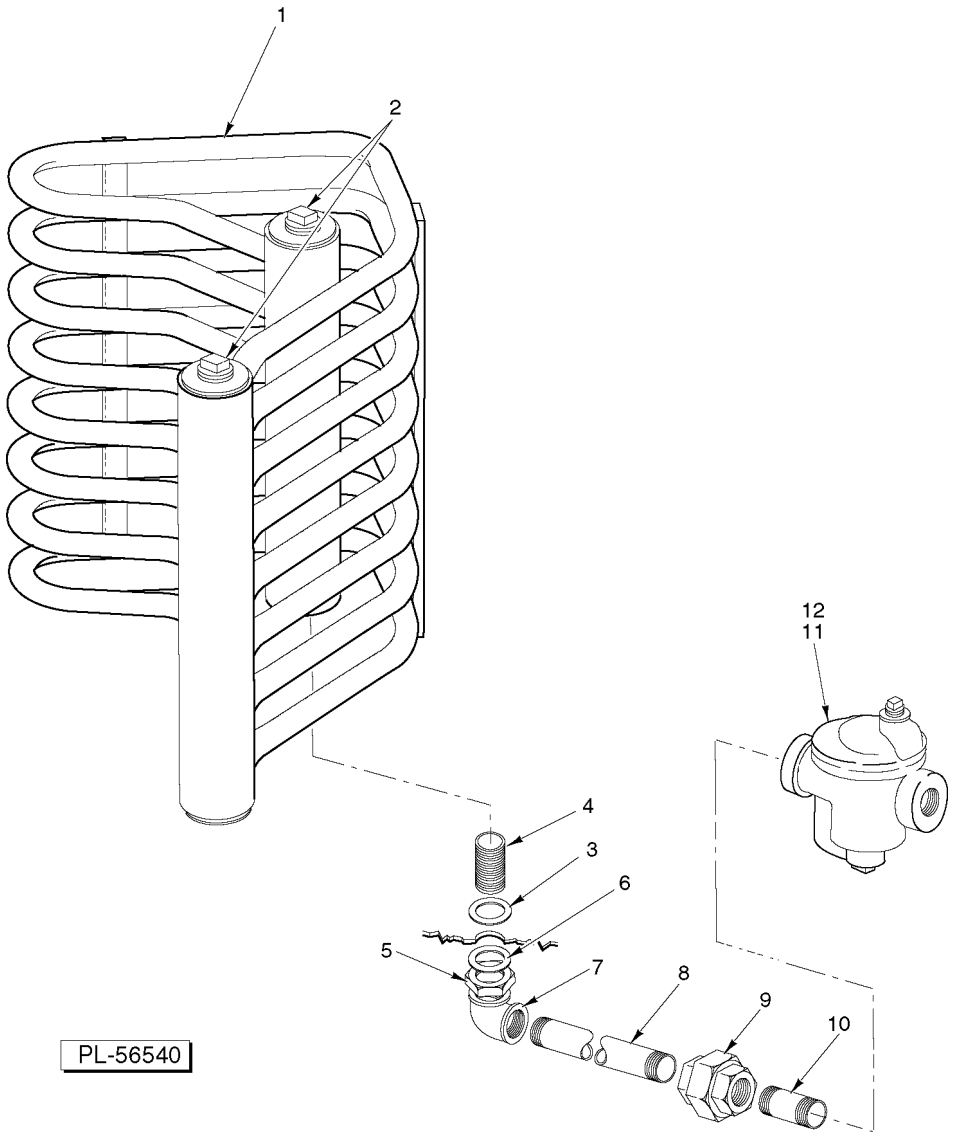

STEAM COIL HEAT
(2 UNITS REQUIRED)

STEAM COIL HEAT
(2 UNITS REQUIRED)

ILLUS. PL-56540	PART NO.	NAME OF PART	AMT.
1	00-329243	Coil - Steam	1
2	FP-052-09	Pipe Plug 3/4 Sq. Hd. (SST)	2
3	WS-013-45	Washer (SST)	1
4	FP-080-17	Pipe 3/4 x 2 (TBE; 1 R.T.O.E.) (SST)	1
5	FP-053-09	Lock Nut 3/4 NPSL Pipe (SST)	1
6	WS-013-45	Washer (SST)	1
7	FP-013-22	Elbow Pipe 3/4 x 90 Deg	1
8	FP-036-12	Pipe 3/4 x 7 3/4 TBE	1
9	FP-022-17	Union 3/4 (Grd. Seat)	1
10	FP-036-92	Pipe 3/4 x 1 3/8 TBE	1
11	00-118316	Steam Trap (0-20 PSI)	1
12	00-118317	Steam Trap (21-50 PSI)	1

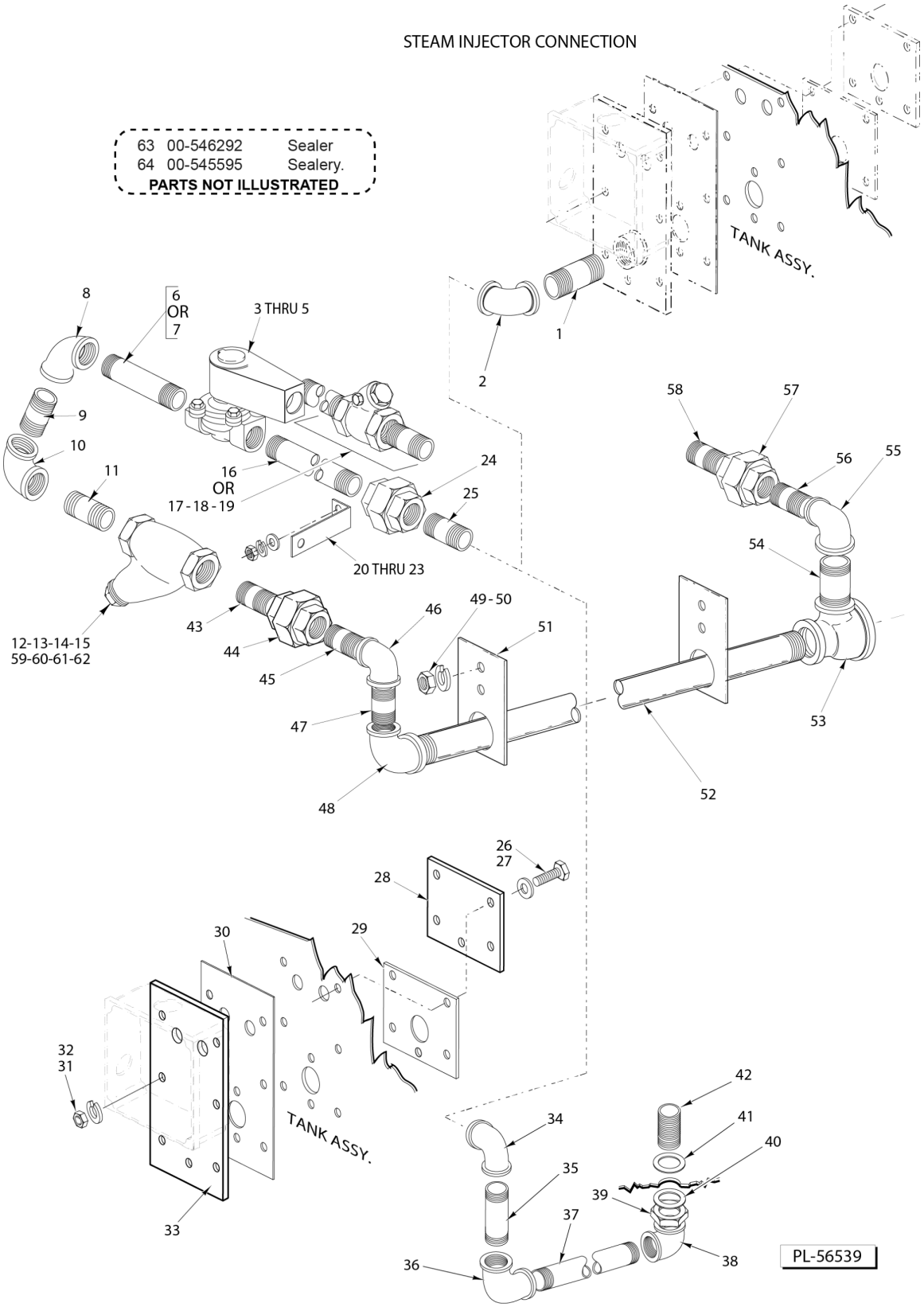

STEAM HEAT PIPING
(2 UNITS REQUIRED)

STEAM HEAT PIPING
(2 UNITS REQUIRED)

ILLUS. PL-56539	PART NO.	NAME OF PART	AMT.
*1	FP-036-92	Pipe 3/4 x 1 3/8 TBE	1
*2	FP-013-22	Elbow Pipe 3/4 x 90 Deg	1
3	00-892004-00002	Solenoid Valve (120 V.) (Incls. Items 4 & 5)	1
4	00-892363-00002	Coil - Solenoid Valve (120 V.)	1
5	00-270336	Service Kit - Solenoid Valve	1
*6	FP-059-76	Pipe 3/4 x 2 1/4 TBE	1
**7	FP-036-92	Pipe 3/4 x 1 3/8 TBE	1
8	FP-013-22	Elbow Pipe 3/4 x 90 Deg	1
9	FP-036-92	Pipe 3/4 x 1 3/8 TBE	1
10	FP-013-22	Elbow Pipe 3/4 x 90 Deg	1
11	FP-036-92	Pipe 3/4 x 1 3/8 TBE	1
***12	00-186922	Strainer - Line (3/4 In.) (Brass) (Kitz) (Incls. Items 13, 14, & 15) (Alternate to Item 59)	1
13	00-186923	Plug - Branch	1
14	00-186924	Gasket - Branch Plug	1
15	00-186925	Screen - Line Strainer	1
**16	FP-036-11	Pipe 3/4 x 5	1
*17	FP-036-92	Pipe 3/4 x 1 3/8 TBE	1
*18	00-074696	Check Valve (3/4)	1
*19	FP-036-07	Pipe 3/4 x 4 1/4 TBE	1
**20	00-289721	Bracket	1
**21	WS-003-49	Washer (SST)	1
**22	WL-006-17	Lockwasher 1/4 Medium (SST)	1
**23	NS-015-01	Nut 1/4-20 Hex (SST)	1
24	FP-022-17	Union 3/4 (Grd. Seat)	1
25	FP-036-92	Pipe 3/4 x 1 3/8 TBE	1
**26	SC-041-15	Cap Screw 5/16-18 x 1 1/4 Hex Hd. (SST)	7
**27	WS-017-08	Washer (SST)	14
**28	00-328777	Plate - Inner	1
**29	00-435026	Gasket	1
**30	00-271109	Gasket - Mounting	1
**31	NS-015-11	Nut 5/16-18 Hex (SST)	7
**32	WL-006-23	Lockwasher 5/16 Helical (SST)	7
**33	00-328776	Plate - Outer	1
**34	FP-013-22	Elbow Pipe 3/4 x 90 Deg	1
**35	FP-036-07	Pipe 3/4 x 4 1/8	1
**36	FP-013-22	Elbow Pipe 3/4 x 90 Deg	1
**37	FP-087-48	Pipe 3/4 x 8 TBE	1
**38	FP-013-22	Elbow Pipe 3/4 x 90 Deg	1
**39	FP-053-09	Lock Nut 3/4 NPSL Pipe (SST)	1
**40	WS-013-45	Washer (SST)	1
**41	WS-013-45	Washer (SST)	1
**42	FP-080-17	Pipe 3/4 x 2 (TBE; 1 1/2 R.T.O.E.) (SST)	1
43	FP-036-92	Pipe 3/4 x 1 3/8 TBE	1
44	FP-022-17	Union 3/4 (Grd. Seat)	1
45	FP-036-92	Pipe 3/4 x 1 3/8 TBE	1
46	FP-013-22	Elbow Pipe 3/4 x 90 Deg	1
47	FP-036-92	Pipe 3/4 x 1 3/8 TBE	1
48	FP-079-97	Elbow - Reducing 90 Deg. x 1 to 3/4	1
49	WL-006-17	Lockwasher 1/4 Helical (SST)	2
50	NS-015-01	Nut 1/4-20 Hex (SST)	2
51	00-473145	Bracket	2
52	FP-067-55	Pipe 1 1/4 x 42 TBE	1
53	FP-019-76	Tee 1 1/2 x 1 x 1	1
54	FP-036-17	Pipe 1 x 1-1/2 TBE	1
55	FP-079-97	Elbow - Reducing 90 Deg. x 1 to 3/4	1

STEAM HEAT PIPING
(2 UNITS REQUIRED)

ILLUS. PL-56539	PART NO.	NAME OF PART	AMT.
56	FP-036-92	Pipe 3/4 x 1 3/8 TBE	1
57	FP-022-17	Union 3/4 (Grd. Seat)	1
58	FP-036-92	Pipe 3/4 x 1 3/8 TBE	1
***59	00-186922	Strainer - Line (3/4 In.) (Brass) (Apollo / Conbraco) (Incls. Items 60, 61, & 62) (Alternate to Item 12)	1
60	00-749802-00001	Cap	1
61	00-749802-00002	Gasket	1
62	00-749802-00003	Screen (80 Mesh)	1
63	00-546292	Sealer - Pipe	AR
64	00-545595	Sealer (1/8 Rd.)	AR

* Use on Steam Injector Tank Heated Machines.
** Use on Steam Coil Tank Heated Machines.
*** Kitz line strainer is approx. 1/4" shorter than Apollo / Conbraco.

NOTES

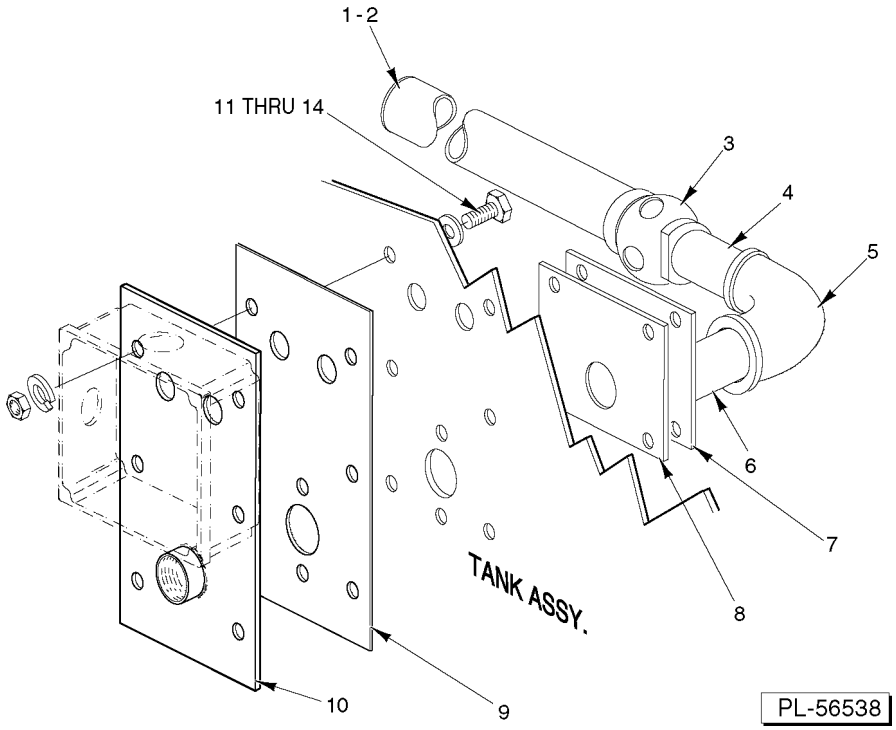

STEAM INJECTOR HEAT
(2 UNITS REQUIRED)

STEAM INJECTOR HEAT
(2 UNITS REQUIRED)

ILLUS. PL-56538	PART NO.	NAME OF PART	AMT.
1	00-271110	Piping - Steam Injector (Incls. Items 2, 3, & 4)	1
2	FP-085-05	Pipe 1 x 10 1/2 STOE (SST)	1
3	00-288671	Silent Water Heater Assy	1
4	FP-054-44	Pipe 3/4 x 2 1/2 TBE (SST)	1
5	FP-049-15	Elbow 3/4 x 90 Deg. (SST)	1
6	FP-054-32	Pipe 3/4 x 4 3/8 Lg. TBE (SST)	1
7	00-435027	Plate	1
8	00-435026	Gasket	1
9	00-271109	Gasket - Mounting	1
10	00-271108	Plate - Mounting	1
11	SC-041-15	Cap Screw 5/16-18 x 1 1/4 Hex Hd	7
12	WS-017-08	Washer (0.328 x 0.625 x 0.062) (SST)	14
13	WL-006-23	Lockwasher 5/16 Helical (SST)	7
14	NS-015-11	Nut 5/16-18 Hex (SST)	7
	00-546292	Sealer - Pipe	AR
	00-545595	Sealer (1/8 Rd.)	AR

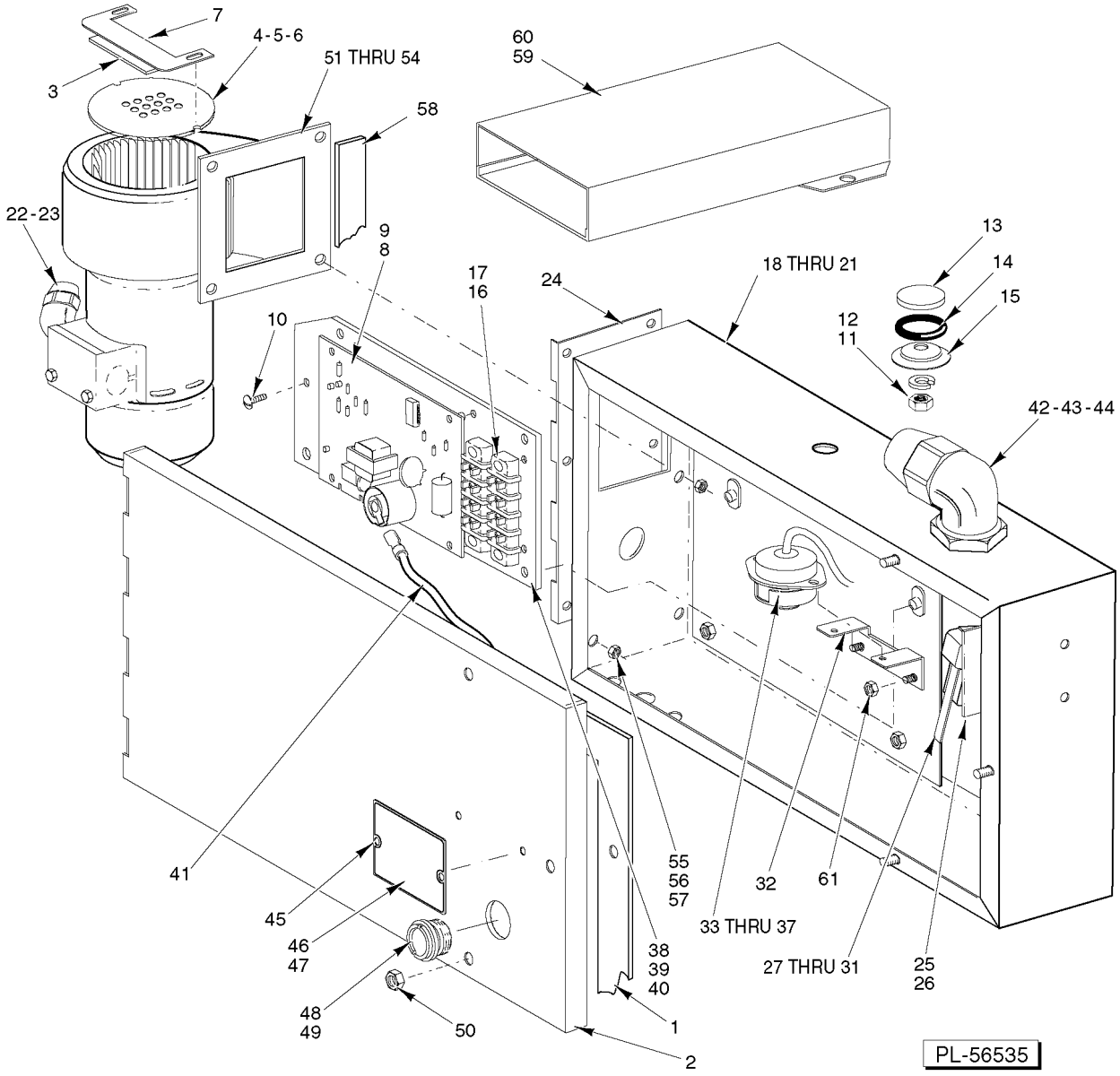

CONTROL BOX - GAS HEAT
(2 UNITS REQUIRED)

CONTROL BOX - GAS HEAT
(2 UNITS REQUIRED)

ILLUS. PL-56535	PART NO.	NAME OF PART	AMT.
1	00-436745	Gasket - Lid	1
2	00-436101-00001	Lid - Gas Heat Box	1
3	00-526454	Foam Tape	AR
4	00-436065	Plate - Restrictor (16 Holes) (Marked 60 Hz.) (Nat. or LP Gas)	AR
5	00-436763	Plate - Restrictor (24 Holes) (Marked NG 50 Hz.)	AR
6	00-436765	Plate - Restrictor (28 Holes) (Marked LP 50 Hz.)	AR
7	00-435539	Plate - Adjusting	1
8	00-436853	Ignitor Board 24 VAC	1
9	SD-009-40	Self-Tapping Screw 6-32 x 3/4 Phil. Pan Hd., Type F	4
10	SD-009-05	Self-Tapping Screw 6-32 x 5/16 Phil. Rd. Hd., Type F	1
11	NS-015-01	Nut 1/4-20 Hex (SST)	1
12	WL-006-17	Lockwasher 1/4 Helical (SST)	1
13	00-119244	Cap & Stud Assy	1
14	00-067500-00031	O-Ring	1
15	00-119254	Retainer - Cap	1
16	00-294325-014-1	Terminal Block	2
17	SD-009-17	Self-Tapping Screw 8-32 x 5/8 Phil. Pan Hd., Type F	4
18	00-436757	Gas Heat Box	1
19	NS-015-01	Nut 1/4-20 Hex (SST)	7
20	WL-006-17	Lockwasher 1/4 Helical (SST)	7
21	WS-017-06	Washer (SST)	7
22	FE-024-61	Connector 45 Deg. (Non-Metallic) Sealtite (1/2 Male Thd. x 1/2 Flex. Cnd.)	1
23	FE-024-57	Connector Straight (Non-Metallic) Sealtite (1/2 Male Thd. x 1/2 Flex. Cnd.)	1
24	00-436102	Bracket - Lid Mounting	1
25	00-274514-00001	Bracket	1
26	SC-067-06	Mach. Screw 10-24 x 1/2 Hex Hd. (SST)	2
27	00-087711-00221	Switch - S.P.D.T.	1
28	00-270280	Insulator - Door Switch	1
29	SC-112-90	Mach. Screw 4-40 x 1 Pan Hd	2
30	WL-003-03	Lockwasher #4 Helical	2
31	NS-009-02	Nut 4-40 Hex	2
32	00-271122	Bracket - Thermostat	1
33	00-271123	Protector - High Limit	1
34	00-328758	Jumper Wire - Socket Type Connector (Use W/Item 33)	2
35	00-293946	Sleeve - Lead	1
36	SC-021-08	Mach. Screw 6-32 x 3/8 Slotted Rd. Hd. (SST)	2
37	NS-031-50	Stop Nut 6-32 Hex (SST)	2
38	00-435046	Control Plate	1
39	SC-018-01	Mach. Screw 10-24 x 3/8 Slotted Pan Hd	3
40	WL-014-07	Lockwasher #10 External Shakeproof (SST)	3
41	00-271146	Cable - High Voltage	1
42	FE-024-67	Connector 90 Deg. (Non-Metallic) Sealtite (1 Male Thd. x 1 Flex. Cnd.)	2
43	FE-006-50	Lock Nut (Electrical)	1
44	FE-008-12	Gasket	1
45	00-114247-00001	Rivet - Drive	2
46	00-812646-00007	Data Plate (LP Gas)	1
47	00-812646-00006	Data Plate (Natural Gas)	1
48	00-435024	Eye	1
49	NS-035-25	Lock Nut 3/4-16 Palnut	1
50	NS-031-15	Stop Nut - Special 10-24 Hex (SST)	3
51	00-274524-00002	Blower Motor (120 V.)	1
52	SC-113-26	Mach. Screw 1/4-20 x 5/8 Hex Hd	4
53	NS-031-21	Stop Nut 1/4-20 Hex (SST)	4
54	WS-003-48	Washer (SST)	4
55	SC-113-26	Mach. Screw 1/4-20 x 5/8 Hex Hd	2

CONTROL BOX - GAS HEAT
(2 UNITS REQUIRED)

ILLUS. PL-56535	PART NO.	NAME OF PART	AMT.
56	WS-003-48	Washer (SST)	2
57	NS-031-21	Stop Nut 1/4-20 Hex (SST)	2
58	00-529390	Tape - Foam (3/4 x 1/16 Thk.)	AR
59	00-328650	Air Inlet Channel (Nat. Gas)	1
60	SD-012-20	Self-Tapping Screw 8-32 x 1/2 Phil. Truss Hd., Type T	2
61	NS-031-15	Stop Nut - Special 10-24 Hex (SST)	2
	00-294357-00001	Connector	AR
	00-294357-00002	Connector (Black)	AR
	00-294677-00003	Clamp - Wire (3/4 I.D.)	3
	NS-047-94	Nut Lock Special 3/16	3
	00-526408	Tape - Foam	AR

NOTES

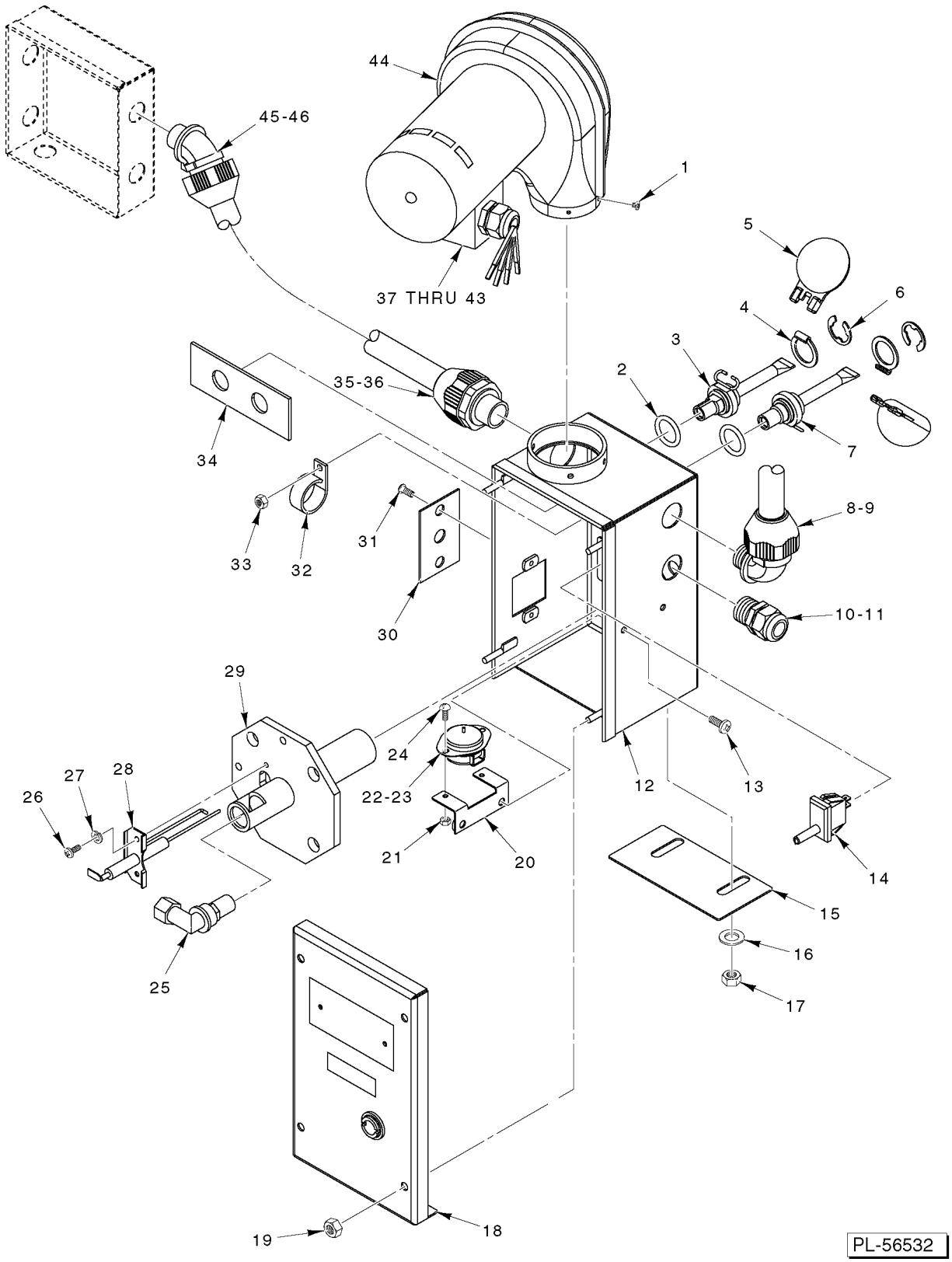

BLOWER AND CONTROL BOX
(CURRENT CONSTRUCTION)
(NATURAL GAS ONLY)

BLOWER AND CONTROL BOX
(CURRENT CONSTRUCTION)
(NATURAL GAS ONLY)

ILLUS. PL-56532	PART NO.	NAME OF PART	AMT.
1	SC-008-18	Mach. Screw 10-32 x 3/8 Slotted Rd. Hd.	3
2	00-067500-00072	O-Ring	2
3	00-328495	Probe & Switch Assy. (2 Wire) (Water Level) (Incls. Items 4, 5, & 6)	1
4	00-112467	Retainer - Float	1
5	00-122674	Float Assy.	1
6	RR-010-13	Retaining Ring	1
7	00-186091	Probe & Float Assy. (4 Wire) (Long) (Temp. & Water Level)	1
8	FE-024-65	Connector - Conduit 1/2	1
9	00-436913-00010	Conduit - Liquidtite 1/2	1
10	FE-022-84	Strain Relief	1
11	FE-024-88	Lock Nut - Electrical 1/2	1
12	00-892678	Box - Gas Heat	1
13	SC-066-06	Mach. Screw 10-24 x 1/2 Phil. Truss Hd. (SST)	2
14	00-087711-00337	Switch - Plunger (Normally Open)	1
15	00-892689	Shutter - Air	1
16	WS-003-47	Washer (SST)	2
17	NS-031-21	Stop Nut 1/4-20 Special	2
18	00-892723-00003	NLA - Obsolete--Lid Assy. (Nat. Gas)	1
19	NS-031-15	Stop Nut 10-24 Special	4
20	00-271122-00002	Bracket - Thermostat	1
21	NS-031-50	Stop Nut 6-32 Special	2
22	00-271123	Protector - High Limit	1
23	00-293946	Sleeve - Lead	1
24	SC-127-26	Mach. Screw 6-32 x 3/8 Phil. Rd. Hd. (SST)	2
25	00-435701-00009	Angle - Fitting	1
26	SC-120-35	Mach. Screw 8-32 x 3/8 Phil. Pan Hd.	2
27	WL-014-05	Lockwasher #8 External	2
28	00-436792	Electrode - Spar/Sense	1
29	00-892674	Burner	1
30	00-892682	Plate - Gas Line	1
31	SC-066-06	Mach. Screw 10-24 x 1/2 Truss Hd.	2
32	00-294677-00004	Clamp - Wire	1
33	NS-047-94	Lock Nut 3/16 Stud	1
34	00-435960-00001	Plate - Spacer Float/Pobe	1
35	FE-024-58	Connector - Conduit 3/4	1
36	00-436913-00018	Conduit - Liquidtite 3/4	1
37	FE-006-18	Connector - Wire Nut 22-14	3
38	SC-125-42	Mach. Screw 8-32 x 1/2 Phil. Rd. Hd. (SST)	1
39	NS-031-08	Stop Nut 8-32 Special (SST)	1
40	WL-014-07	Lockwasher #10 External	1
41	FE-022-84	Strain Relief - Electrical	1
42	FE-024-88	Lock Nut 1/2 Electrical	1
43	00-892709-00004	Cable Assy.	1
44	00-892680	Blower	1
45	FE-024-62	Connector - Conduit 3/4 (45 Deg.)	1
46	FE-007-25	Bushing - Reducing	2

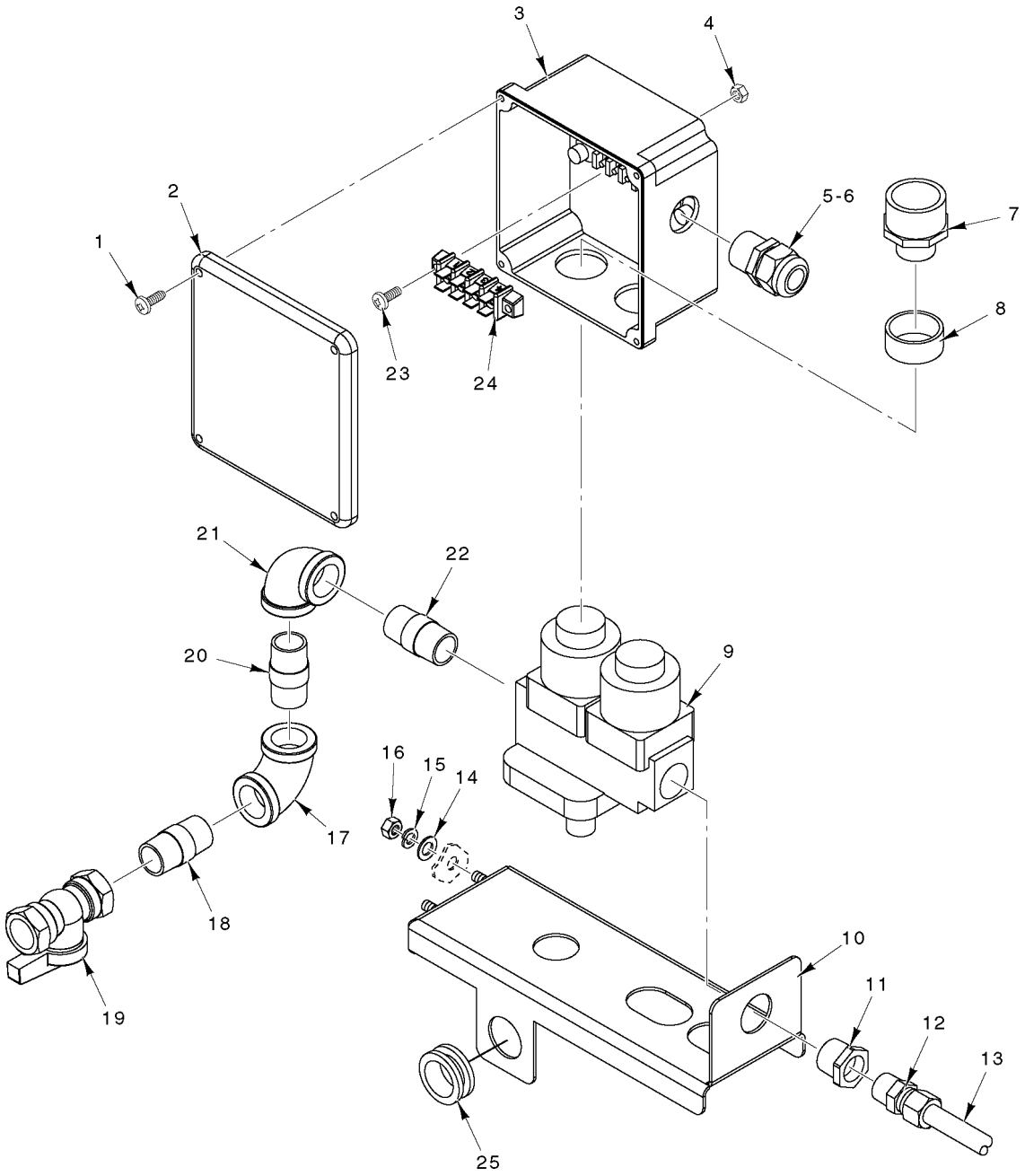

GAS VALVE
(CURRENT CONSTRUCTION)
(NATURAL GAS ONLY)

GAS VALVE
(CURRENT CONSTRUCTION)
(NATURAL GAS ONLY)

ILLUS. PL-56534	PART NO.	NAME OF PART	AMT.
1	SD-012-20	Self-Tapping Screw 8-32 x 1/2 Phil. Truss Hd., Type T	4
2	00-288465	Lid & Gasket Assy	1
3	00-892690	Box - Gas Valve	1
4	NS-031-08	Stop Nut 8-32 Special (SST)	2
5	FE-022-84	Strain Relief	1
6	FE-024-88	Lock Nut 1/2 Plastic	1
7	00-892714	Adapter - 3/4 Slip x 1/2	2
8	00-892695	Spacer - Valve Box	2
9	00-328426-00001	Valve/Regulator - Gas	1
10	00-892681	Bracket - Valve/Regulator	1
11	FP-026-14	Bushing - Pipe 1/2 to 3/8	1
12	00-435702	Connector - Male 7/16	1
13	00-435836-00004	Tube - Aluminum 7/16	1
14	WS-003-47	Washer (SST)	2
15	WL-006-17	Lockwasher 1/4 Helical	2
16	NS-015-01	Nut 5/16-24 Hex (SST)	2
17	FP-013-15	Elbow - Pipe 1/2 x 90 Deg	1
18	FP-067-04	Pipe 1/2 x 1 7/8	1
19	00-291988-00003	Valve - Gas (Shut Off)	1
20	FP-067-04	Pipe 1/2 x 1 7/8	1
21	FP-013-15	Elbow - Pipe 1/2 x 90 Deg	1
22	FP-067-04	Pipe 1/2 x 1 7/8	1
23	SD-009-17	Self-Tapping Screw 8-32 x 5/8 Phil. Pan Hd., Type F	2
24	00-294325-014-1	Block - Terminal	1
25	00-892820	Grommet	1
	00-546292	Sealer	AR

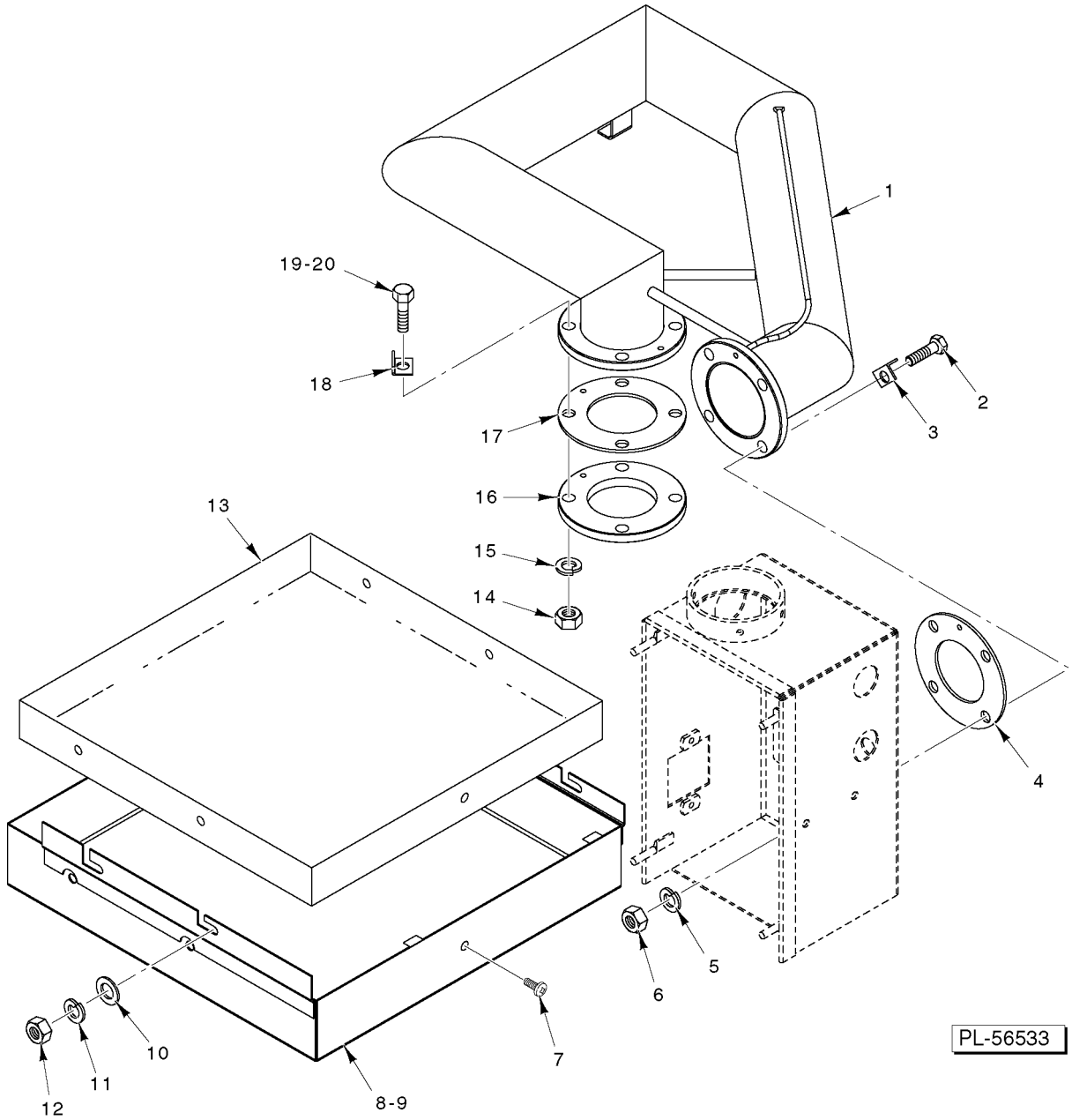

IMMERSION TUBE
(CURRENT CONSTRUCTION)

IMMERSION TUBE
(CURRENT CONSTRUCTION)

ILLUS. PL-56533	PART NO.	NAME OF PART	AMT.
1	00-892574	Tube - Immersion 3 In	1
2	SC-041-40	Cap Screw 7/16-14 x 1 1/2 Hex Hd. (SST)	4
3	00-892710	Stop - Hex Hd	4
4	00-436100	Gasket - Immersion Tube	1
5	WL-019-77	Lockwasher 7/16	4
6	NS-047-97	Hex Nut 7/16-14 (SST)	4
7	SC-066-06	Mach. Screw 10-24 x 1/2 Phil. Truss Hd. (SST)	5
8	00-892693-00001	Shroud - Bottom	1
9	00-274520	Insulation	1
10	WS-017-06	Washer (SST)	4
11	WL-006-17	Lockwasher 1/4 Helical	4
12	NS-015-01	Hex Nut 1/4-20 (SST)	4
13	00-274498-00001	Liner - Shroud	1
14	NS-047-97	Hex Nut 7/16-14 (SST)	4
15	WL-019-77	Lockwasher 7/16	4
16	00-435952	Flange - Immersion Tube	1
17	00-436100	Gasket - Immersion Tube	1
18	00-892710	Stop - Hex Hd	4
19	SC-041-40	Cap Screw 7/16-14 x 1 1/2 Hex Hd. (SST)	4
20	00-545595	Sealer - Bolt	AR

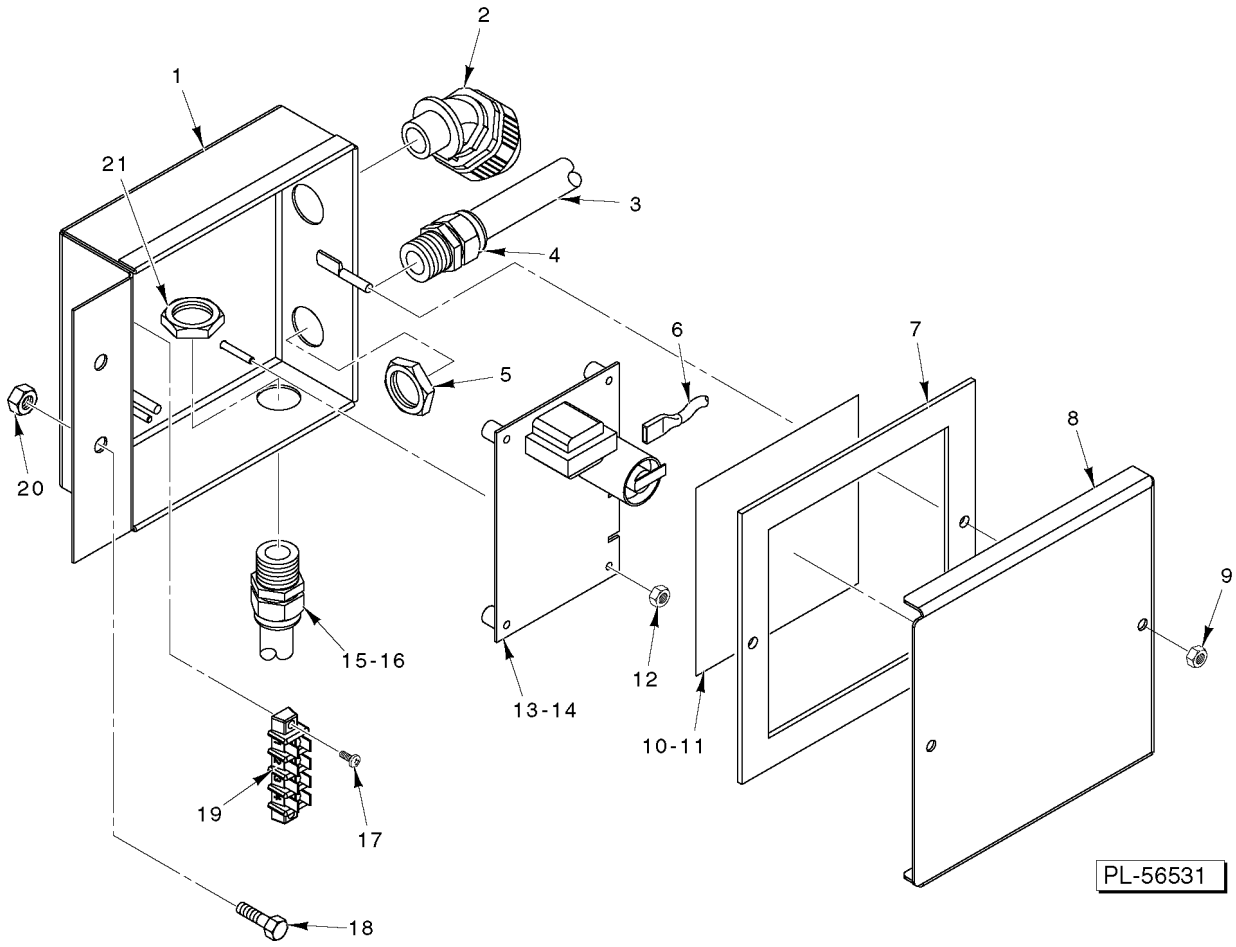

IGNITION MODULE
(CURRENT CONSTRUCTION)

IGNITION MODULE
(CURRENT CONSTRUCTION)

ILLUS. PL-56531	PART NO.	NAME OF PART	AMT.
1	00-892686	Box - Ignition Module	1
2	FE-024-61	Connector - Conduit 1/2 (45 Deg.)	1
3	00-892709-00003	Cable Assy	1
4	FE-022-84	Strain Relief	1
5	FE-024-88	Lock Nut 1/2 (Plastic)	1
6	00-271146-00002	Cable - High Voltage	1
7	00-892687	Gasket - Control Box	1
8	00-892684	Lid - Ignitor Control Box	1
9	NS-031-15	Stop Nut 10-24 Hex (SST)	2
10	00-892696	Barrier - Mylar Module Box	1
11	0F-034775	Label - Ignitor Box	1
12	NS-031-50	Stop Nut 6-32 Special	4
13	00-892698	Board - Direct Spark Ignition	1
14	00-435538	Harness - Ignitor Board	1
15	FE-022-84	Strain Relief	1
16	00-892709-00002	Cable Assy	1
17	SC-125-42	Mach. Screw 8-32 x 1/2 Phil. Rd. Hd. (SST)	2
18	SC-041-12	Cap Screw 5/16-18 x 7/8 Hex Hd. (SST)	2
19	00-294325-014-1	Block - Terminal	1
20	NS-031-29	Stop Nut 5/16-18 (SST)	2
21	FE-024-88	Lock Nut 1/2 (Plastic)	1

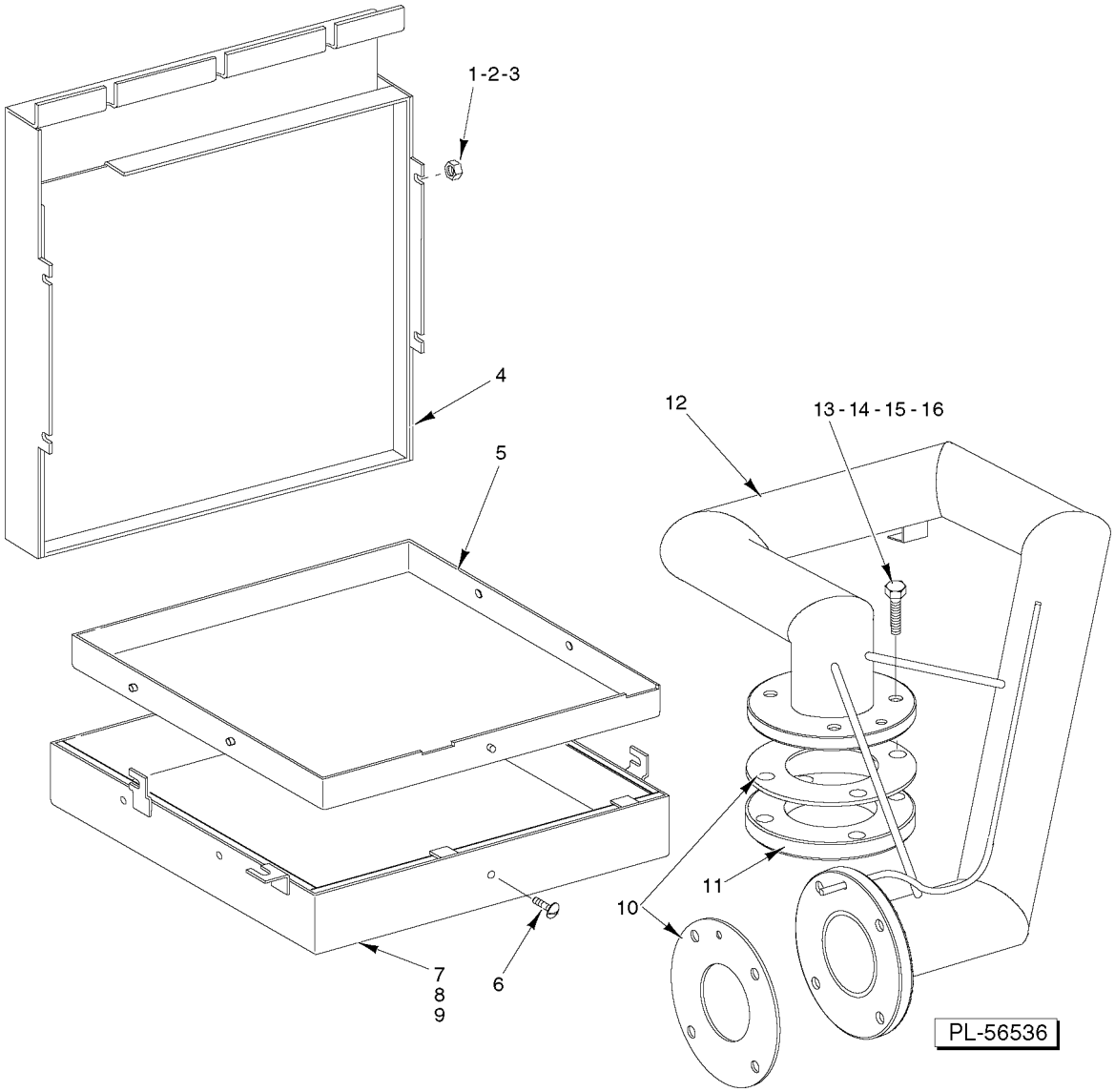

GAS BURNER & FLUE(2 UNITS REQ'D)
(L.P. & PREVIOUS NATURAL GAS CONSTRUCTION)

GAS BURNER & FLUE(2 UNITS REQ'D)
(L.P. & PREVIOUS NATURAL GAS CONSTRUCTION)

ILLUS. PL-56536	PART NO.	NAME OF PART	AMT.
1	NS-015-01	Nut 1/4-20 Hex (SST)	11
2	WL-006-17	Lockwasher 1/4 Helical (SST)	11
3	WS-017-06	Washer (SST)	11
4	00-274565	Flue	1
5	00-274498-00001	Liner - Shroud	1
6	SC-066-06	Mach. Screw 10-24 x 1/2 Truss Hd. (SST)	5
7	00-274496-00001	Shroud	1
8	00-274520	Insulation	1
9	00-274544	Shroud Assy. (Incls. Items 5, 6, 7, & 8)	1
10	00-436100	Gasket	2
11	00-435952	Flange - Immersion Tube	1
12	00-436087	Tube - Immersion	1
13	SC-121-43	Cap Screw 7/16-14 x 1 3/4 Hex Hd	4
14	WS-021-07	Washer (SST)	8
15	WS-019-77	Lockwasher 7/16 Medium	4
16	NS-047-97	Nut 7/16-14 Hex	4

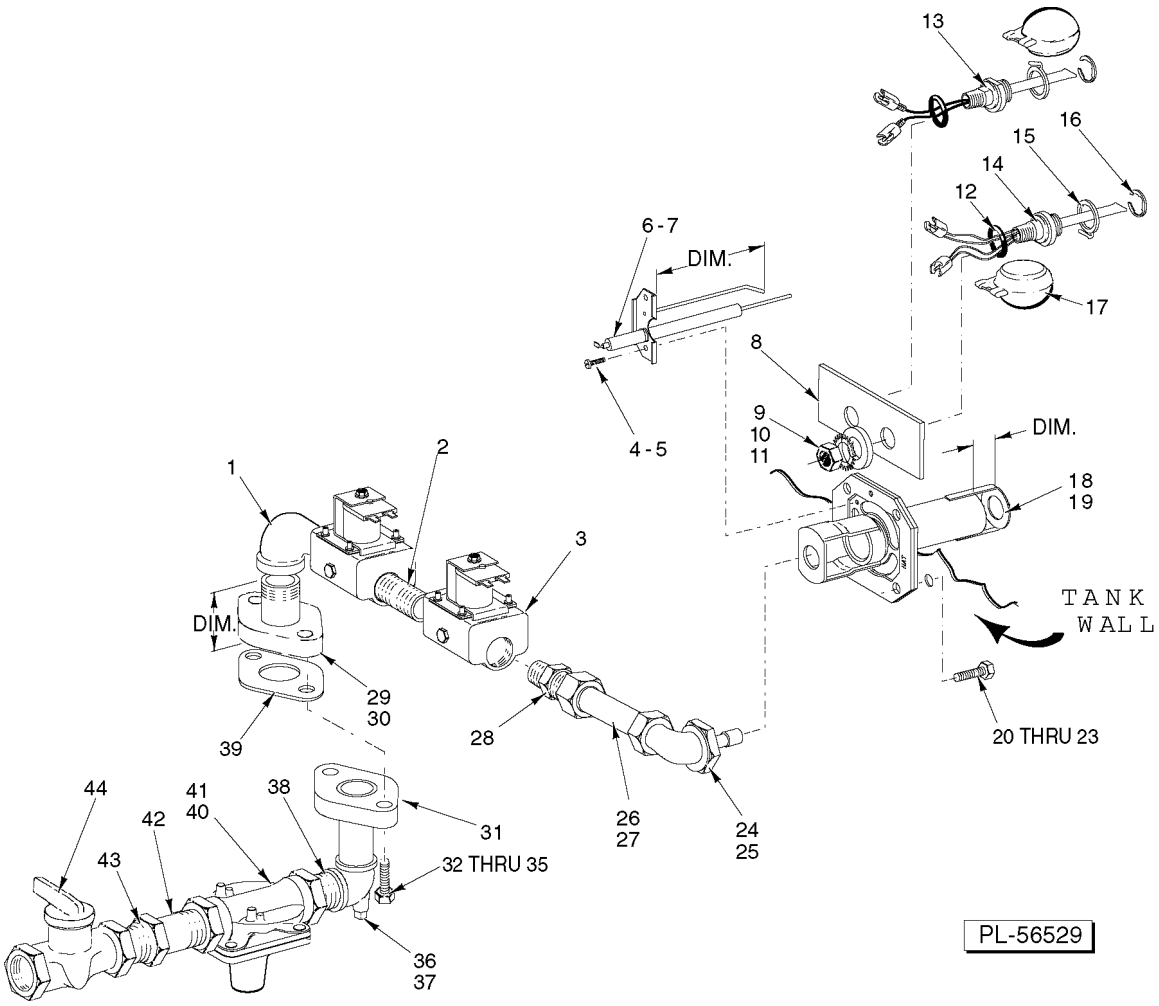

GAS HEAT COMPONENTS(2 UNITS REQ'D)
(L.P. & PREVIOUS NATURAL GAS CONSTRUCTION)

GAS HEAT COMPONENTS(2 UNITS REQ'D)
(L.P. & PREVIOUS NATURAL GAS CONSTRUCTION)

ILLUS. PL-56529	PART NO.	NAME OF PART	AMT.
1	FP-015-10	Elbow - Street 3/8 x 90 Deg	1
2	FP-040-22	Pipe 3/8 x 2 TBE	1
3	00-436118	Gas Valve	2
4	SC-120-35	Mach. Screw 8-32 x 3/8 Pan Hd. (SST)	2
5	WL-014-05	Lockwasher #8 External Shakeproof (SST)	2
6	00-436792	Electrode Ignition - Natural Gas (Dim. 3 1/8) (Marked 665)	1
7	00-436067	Electrode Ignition - LP Gas (Dim. 33/8) (Marked 662)	1
8	00-435960-00001	Plate Spacer	1
9	NS-018-28	Jam Nut 1/2-20 Hex (SST)	2
10	WL-014-31	Lockwasher 1/2 External Shakeproof (SST)	2
11	WS-010-40	Washer - Thrust	2
12	00-067500-00072	O-Ring	2
13	00-328486	Probe & Switch Assy. (2 Wire) (Water Level)	1
14	00-271621	Switch & Probe Assy. (4-Wire) (Long)	1
15	00-112467	Retainer - Float	2
16	RR-010-13	Retaining Ring	2
17	00-122674	Float Assy	2
18	00-328649	Bracket - Orifice (Nat. Gas) (Shown) (Dim. 1/2) (Marked NAT)	1
19	00-436761	Bracket - Orifice (LP Gas) (Dim. 1/2) (Marked LP)	1
20	SC-121-43	Cap Screw 7/16-14 x 1 3/4 Hex Hd	4
21	WL-019-77	Lockwasher 7/16 Medium (SST)	4
22	WS-021-07	Washer (SST)	8
23	NS-047-97	Nut 7/16-14 Hex	4
24	00-435701-00001	Angle Fitting - Natural Gas # 20 Drill (.161)	1
25	00-435701-00002	Angle Fitting - LP Gas # 43 Drill (0.089)	1
26	00-435836-00002	Tube - Aluminum (2 1/8 Lg.) (LP Gas)	1
27	00-435836-00001	Tube - Aluminum (2 1/4 Lg.) (Nat. Gas)	1
28	00-435702	Connector - Special	1
29	00-063262-00034	Flange & Nipple (Dim. 1 15/16) (L.P. Gas)	1
30	00-063262-00033	Flange & Nipple (Dim. 2 1/16) (Nat. Gas)	1
31	00-063262-00032	Flange & Nipple	1
32	SC-041-17	Cap Screw 5/16-18 x 1-1/2 Hex Hd. (SST)	2
33	WS-017-08	Washer (0.328 x 0.625 x 0.062) (SST)	4
34	WL-006-22	Lockwasher 5/16 Light (SST)	2
35	NS-015-11	Nut 5/16-18 Hex (SST)	2
36	FP-028-07	Plug - 1/4 Pipe	1
37	FP-086-62	Tee 3/8 x 1/4 x 3/8 Reducing	1
38	FP-086-63	Pipe 3/8 x 1 3/8	1
39	00-435762	Gasket	2
40	00-435706-00001	Regulator - Natural Gas	1
41	00-435706-00002	Regulator - LP Gas	1
42	FP-035-58	Pipe 3/8 x 2 3/4	1
43	FP-026-14	Bushing 1/2 to 3/8	1
44	00-291988-00003	Valve - Gas (Shut Off)	1

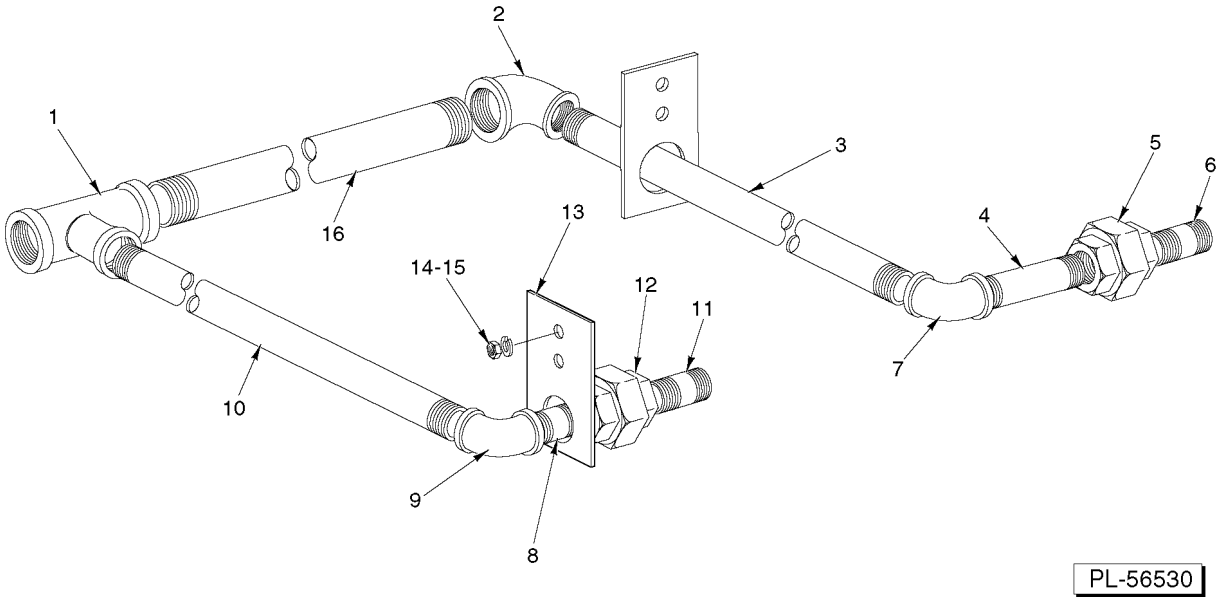

COMMON GAS HEAT PIPING
(L.P. & PREVIOUS NATURAL GAS CONSTRUCTION)

COMMON GAS HEAT PIPING
(L.P. & PREVIOUS NATURAL GAS CONSTRUCTION)

ILLUS. PL-56530	PART NO.	NAME OF PART	AMT.
1	FP-019-33	Tee 3/4 x 3/4 x 1/2 Reducing	1
2	FP-078-89	Elbow - 3/4 N.P.T. x 1/2 Reducing	1
3	FP-059-02	NLA - Obsolete--Pipe 1/2 x 13 5/8 TBE	1
4	FP-059-62	Pipe 1/2 x 5 1/2 TBE	1
5	FP-022-11	Union - Pipe	1
6	FP-059-61	Pipe 1/2 x 1-1/4 TBE	1
7	FP-013-15	Elbow - Pipe 1/2 x 90 Deg	1
8	FP-059-61	Pipe 1/2 x 1-1/4 TBE	1
9	FP-013-15	Elbow - Pipe 1/2 x 90 Deg	1
10	FP-059-02	NLA - Obsolete--Pipe 1/2 x 13 5/8 TBE	1
11	FP-059-61	Pipe 1/2 x 1-1/4 TBE	1
12	FP-022-11	Union - Pipe	1
13	00-473145	Bracket	2
14	WL-006-17	Lockwasher 1/4 Helical (SST)	2
15	NS-015-01	Nut 1/4-20 Hex (SST)	2
16	FP-080-90	Pipe 3/4 x 38 5/8 TBE	1

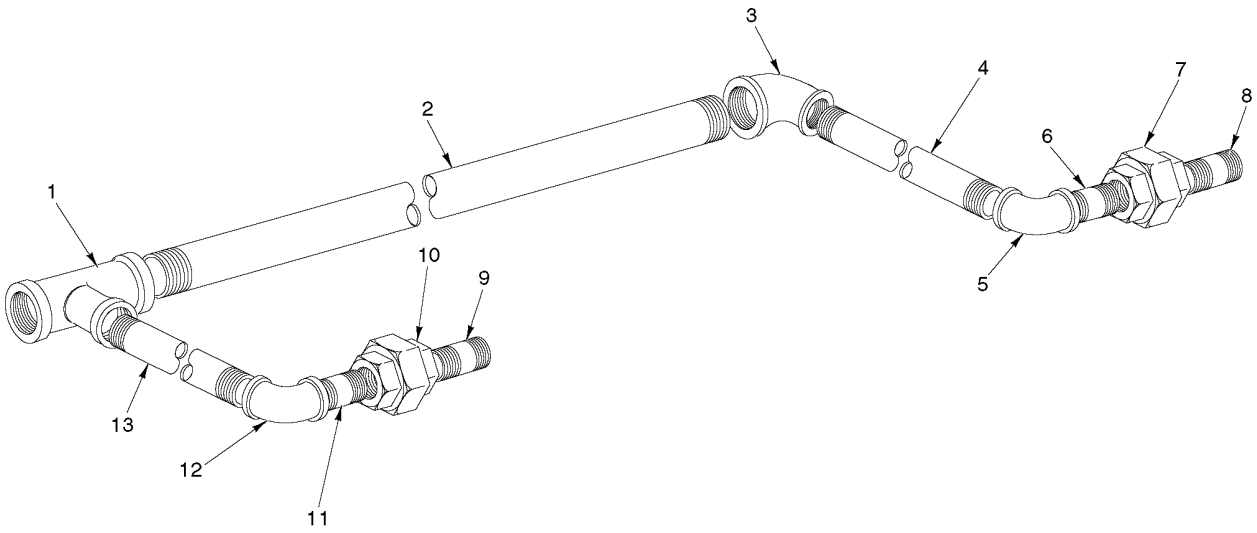

PL-56582

COMMON GAS HEAT PIPING
(CURRENT CONSTRUCTION)
(NATURAL GAS ONLY)

COMMON GAS HEAT PIPING
(CURRENT CONSTRUCTION)
(NATURAL GAS ONLY)

ILLUS. PL-56582	PART NO.	NAME OF PART	AMT.
1	FP-019-33	Tee 3/4 x 3/4 x 1/2 Reducing	1
2	FP-090-07	Pipe 3/4 x 42 3/4 TBE	1
3	FP-015-16	Elbow - Pipe 1/2 x 90 Deg	1
4	FP-059-62	Pipe 1/2 x 5 1/2 TBE	1
5	FP-015-16	Elbow - Pipe 1/2 x 90 Deg	1
6	FP-059-61	Pipe 1/2 x 1-1/4 TBE	1
7	FP-022-11	Union - Pipe	1
8	FP-059-61	Pipe 1/2 x 1-1/4 TBE	1
9	FP-059-61	Pipe 1/2 x 1-1/4 TBE	1
10	FP-022-11	Union - Pipe	1
11	FP-059-61	Pipe 1/2 x 1-1/4 TBE	1
12	FP-015-16	Elbow - Pipe 1/2 x 90 Deg	1
13	FP-059-62	Pipe 1/2 x 5 1/2 TBE	1

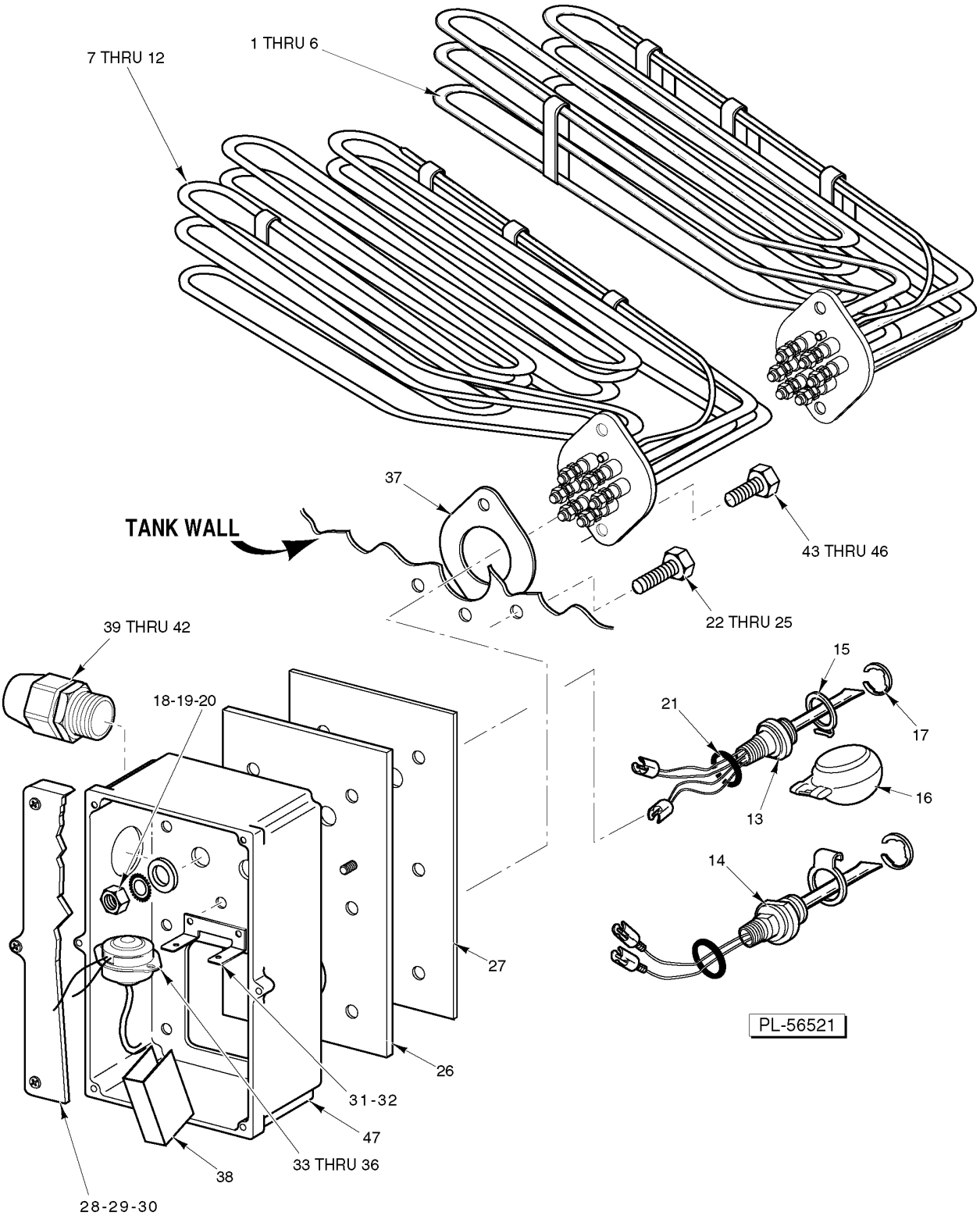

ELECTRIC HEAT
(2 UNITS REQUIRED)

ELECTRIC HEAT
(2 UNITS REQUIRED)

ILLUS. PL-56521	PART NO.	NAME OF PART	AMT.
1	00-436907-00001	Heater - Tank Electric (10kW/Rinse) (208 V., 60 Hz./200 V., 50 Hz., 3 Ph.)	1
2	00-436907-00002	Heater - Tank Electric (10kW/Rinse) (240 V., 50/60 Hz., 3 Ph.)	1
3	00-436907-00003	Heater - Tank Electric (10kW/Rinse) (208 V., 60 Hz./200 V., 50 Hz., 1 Ph.)	1
4	00-436907-00004	Heater - Tank Electric (10kW/Rinse) (240 V., 50/60 Hz., 1 Ph.)	1
5	00-436907-00005	Heater - Tank Electric (10kW/Rinse) (480 V., 60 Hz., 3 Ph.)	1
6	00-436907-00006	Heater - Tank Electric (10kW/Rinse) (380 V., 50 Hz., 3 Ph.)	1
7	00-435990-00001	Heater - Tank Electric (15kW/Wash) (208 V., 60 Hz./200 V., 50 Hz., 3 Ph.)	1
8	00-435990-00002	Heater - Tank Electric (15kW/Wash) (240 V., 50/60 Hz., 3 Ph.)	1
9	00-435990-00003	Heater - Tank Electric (15kW/Wash) (208 V., 60 Hz./200 V., 50 Hz., 1 Ph.)	1
10	00-435990-00004	Heater - Tank Electric (15kW/Wash) (240 V., 50/60 Hz., 1 Ph.)	1
11	00-435990-00005	Heater - Tank Electric (15kW/Wash) (480 V., 60 Hz., 3 Ph.)	1
12	00-435990-00006	Heater - Tank Electric (15kW/Wash) (380 V., 50 Hz., 3 Ph.)	1
13	00-271621	Switch & Probe Assy. (4-Wire) (Long)	1
14	00-328486	Probe & Switch Assy. (2 Wire) (Water Level)	1
15	00-112467	Retainer - Float	2
16	00-122674	Float Assy	2
17	RR-010-13	Retaining Ring	2
18	WL-014-31	Lockwasher 1/2 External Shakeproof (SST)	2
19	WS-010-40	Washer - Thrust	2
20	NS-018-28	Jam Nut 1/2-20 Hex (SST)	2
21	00-067500-00072	O-Ring	2
22	SC-041-15	Cap Screw 5/16-28 x 1 1/4 Hex Hd	6
23	WS-029-05	Washer 0.328 x 0.750 x 0.062 (SST)	12
24	WL-006-23	Lockwasher 5/16 Helical (SST)	6
25	NS-015-11	Nut 5/16-18 Hex (SST)	6
26	00-271118-00001	Plate - Mounting	1
27	00-271109	Gasket - Mounting	1
28	00-289146-00001	Lid & Gasket Assy. (Incls. Item 29)	1
29	00-112005	Gasket - Lid	1
30	SD-012-20	Self-Tapping Screw 8-32 x 1/2 Phil. Truss Hd., Type T	6
31	00-271122	Bracket - Thermostat	1
32	NS-031-15	Stop Nut - Special 10-24 Hex (SST)	2
33	00-293946	Sleeve - Lead	1
34	00-271123	Protector - High Limit	1
35	SC-127-26	Mach. Screw 6-32 x 3/8 Phil. Rd. Hd. (SST)	2
36	NS-031-50	Stop Nut 6-32 Hex (SST)	2
37	00-293598	Gasket - Heater Mounting	1
38	00-950696	Insulator - Terminal (Above 250 V.)	1
39	FE-024-59	Connector Straight (Non-Metallic) Sealtite (1 Male Thd. x 1 Flex Cnd.)	1
40	FE-024-63	Connector 45 Deg. (Non-Metallic) Sealtite (1 Male Thd. x 1 Flex Cnd.)	1
41	FE-008-12	Gasket	1
42	FE-006-50	Lock Nut (Electrical)	1
43	SC-041-13	Cap Screw 5/16-18 x 1 Hex Hd. (SST)	2
44	WS-017-08	Washer (0.328 x 0.625 x 0.062) (SST)	2
45	WL-006-23	Lockwasher 5/16 Helical (SST)	2
46	NS-015-11	Nut 5/16-18 Hex (SST)	2
47	00-474512-00001	Box - Electric Heat	1
	00-526454	Foam Tape	AR
	00-508454	Sealer 1/8 Rd	AR
	00-294357-00001	Connector	AR
	00-294357-00002	Connector (Black)	AR

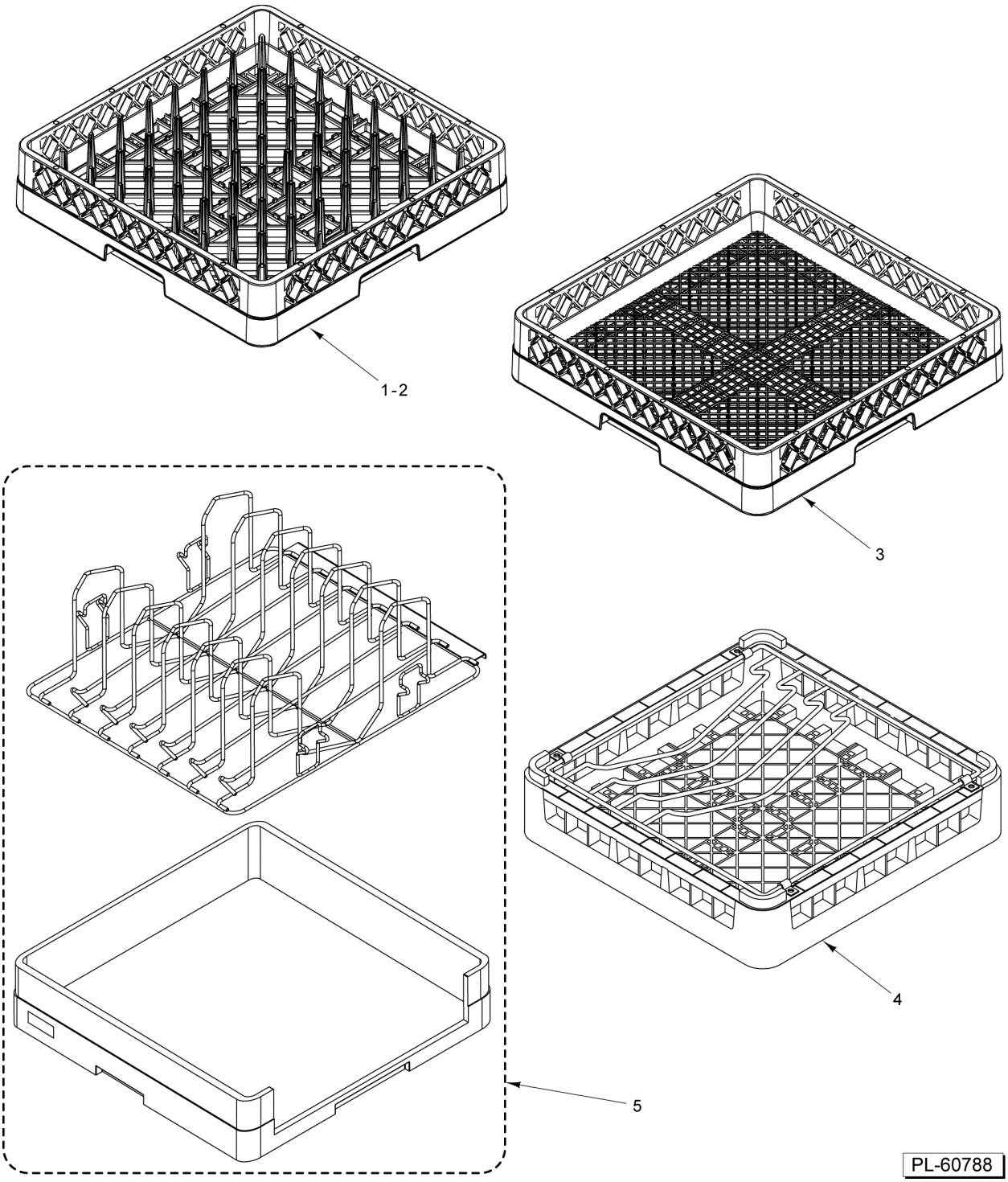

DISH RACKS

DISH RACKS

ILLUS. PL-60788	PART NO.	NAME OF PART	AMT.
1	00-315191	Rack - Peg (Packaged) (Shown)	1
2	00-295288	Peg Type Tray Rack (Packaged) (Open End) (Not Shown)	1
3	00-315193	Rack - Combination (Packaged)	1
4	00-892671	Rack - Bun Pan (Packaged)	1
5	00-936838-00009	Rack (6-Pan) (Packaged)	1

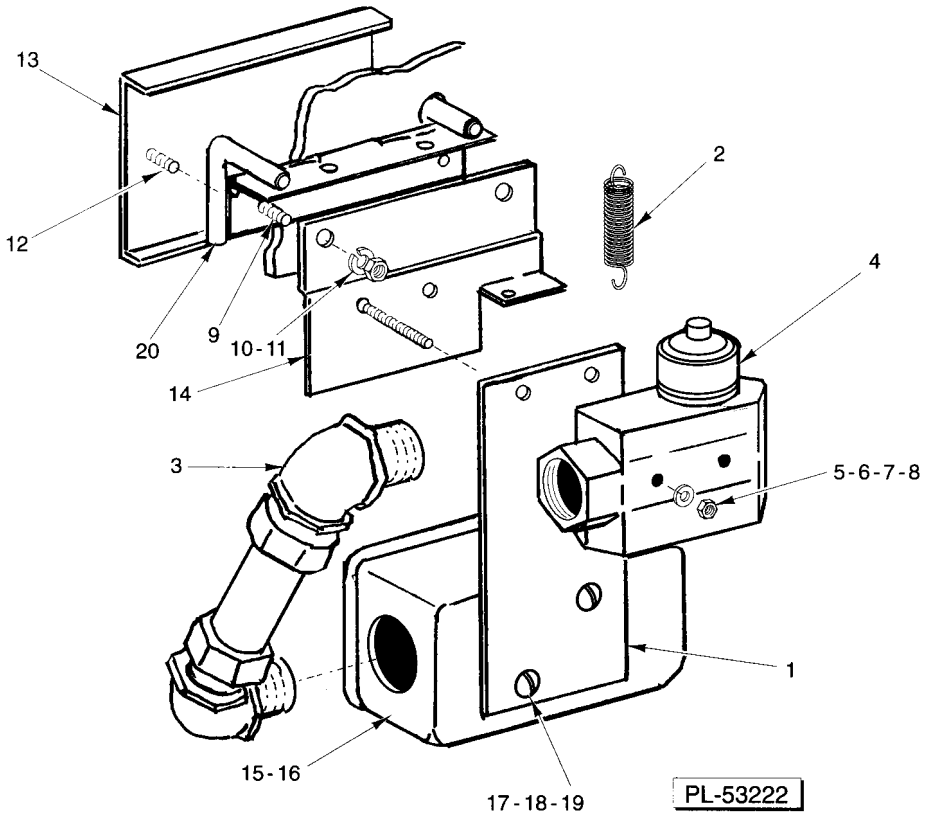

TABLE LIMIT SWITCH

TABLE LIMIT SWITCH

ILLUS. PL-53222	PART NO.	NAME OF PART	AMT.
1	00-277559	Bracket	1
2	00-064165-00003	Spring - Connection	1
3	FE-006-37	Elbow 90 Deg.Short (1/2 Male Thd. x 1/2 Thinwall)	2
4	00-087711-060-1	Switch - Interlock	1
5	SC-027-24	Mach. Screw 6-32 x 1-1/2 Slotted Rd. Hd. (Brass)	2
6	WS-002-06	Washer (Brass)	2
7	NS-010-06	Nut 6-32 Hex (Brass)	2
8	WL-014-03	Lockwasher 6 External Shakeproof	2
9	00-081921	Mach. Screw 10-24 x 1/2 Trimmed Hex Hd	2
10	WS-023-06	Washer	2
11	WL-006-06	Lockwasher 10 Light	2
12	SC-053-02	Mach. Screw 10-24 x 1/2 Truss Hd. SST	2
13	087326	Plate - Actuator	1
14	00-812936	Bracket - Interlock Switch	1
15	FE-004-24	Cover - Junction Box	1
16	FE-003-19	Box - Junction	1
17	SC-066-06	Mach. Screw 10-24 x 1/2 Phil. Truss Hd. (SST)	2
18	WL-006-06	Lockwasher 10 Light	2
19	NS-011-18	Mach. Nut 10-24 Hex SST	2
20	087332	Hinge Assy	1
	078752-4	Retainer (7/16")	1
	ML-103368-0000Z	Table Limit Switch Assembly (Incls items 1 thru 20)	1