OWNER'S INFORMATION
FABRICATION and INSTALLATION INSTRUCTIONS

F27403 (66-4079-1 & 2)(3-85)

HOBART

DROP-IN 4 FT. WIDE GRIDDLES

MODELS CG731, CG831

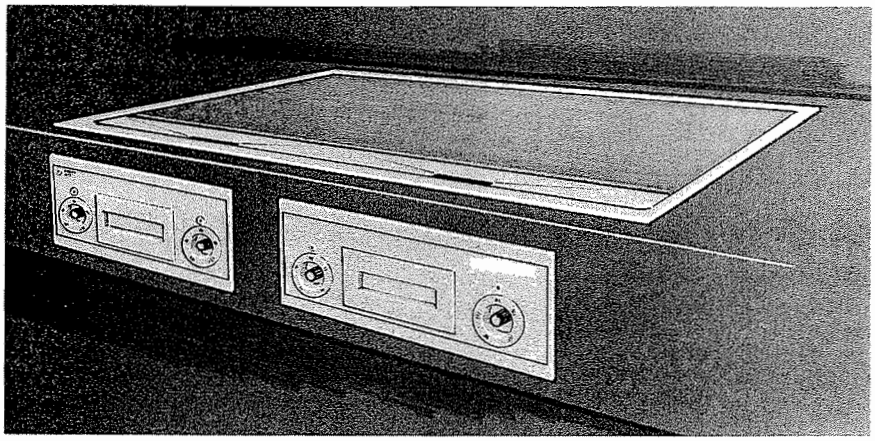

MODEL CG731

TABLE OF CONTENTS

Page

Installation Introduction and Floor Plan (Fig. 1) 2
Layout, Table Cut-Out Detail (Fig. 2) . . 3
Installation Steps (Figs. 3,4,5,6) 4
Electrical Data 5
Wiring Diagram (Fig.7) 6
Owner's Information, Griddling Capacities, Accessory, Weights, Dimensions and Data 7
Warranty. 8

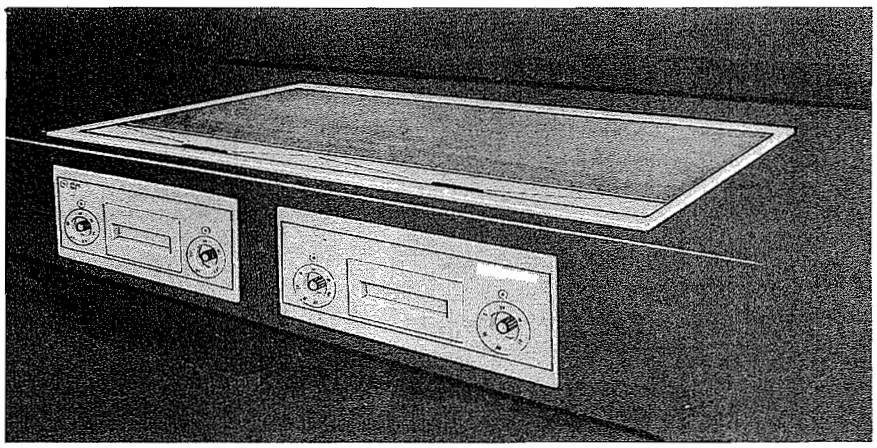

MODEL CG831

Drop-In Griddles are designed to be installed into metal fixtures or fabricated tops. Fixture or top **must be** sufficiently rigid to support device weight without warping. Emphasis is on simplifying the layout and fabrication. This instruction covers the following two models:

	Overall Griddle Dimension
CG731	49 in. wide, 23½ in. deep
CG831	49 in. wide, 29½ in. deep

FLOOR PLAN

The floor plan for both griddles (Fig. 1 & 2) show overall and other key dimensions of the two devices and their relationships to the fixture or top into which they will be installed.

LAYOUT

1. Figure 2 illustrates the holes to be cut into the metal fixture or fabricated top to accept the griddle. Also shown are holes to be cut into fixture front (apron) to accommodate the griddle control panel. The front-to-back (depth) dimensions for the CG731 and CG831 are not the same. Figure 2 shows which dimensions apply to each of the griddles. **Before making the initial cuts into the fixture,** make sure that the model number you are referring to in Fig. 2 corresponds with the model number on the griddle nameplate. The nameplate is located as indicated previously under "SERVICING".

2. All minimum dimensions shown in Fig. 2 must be met.

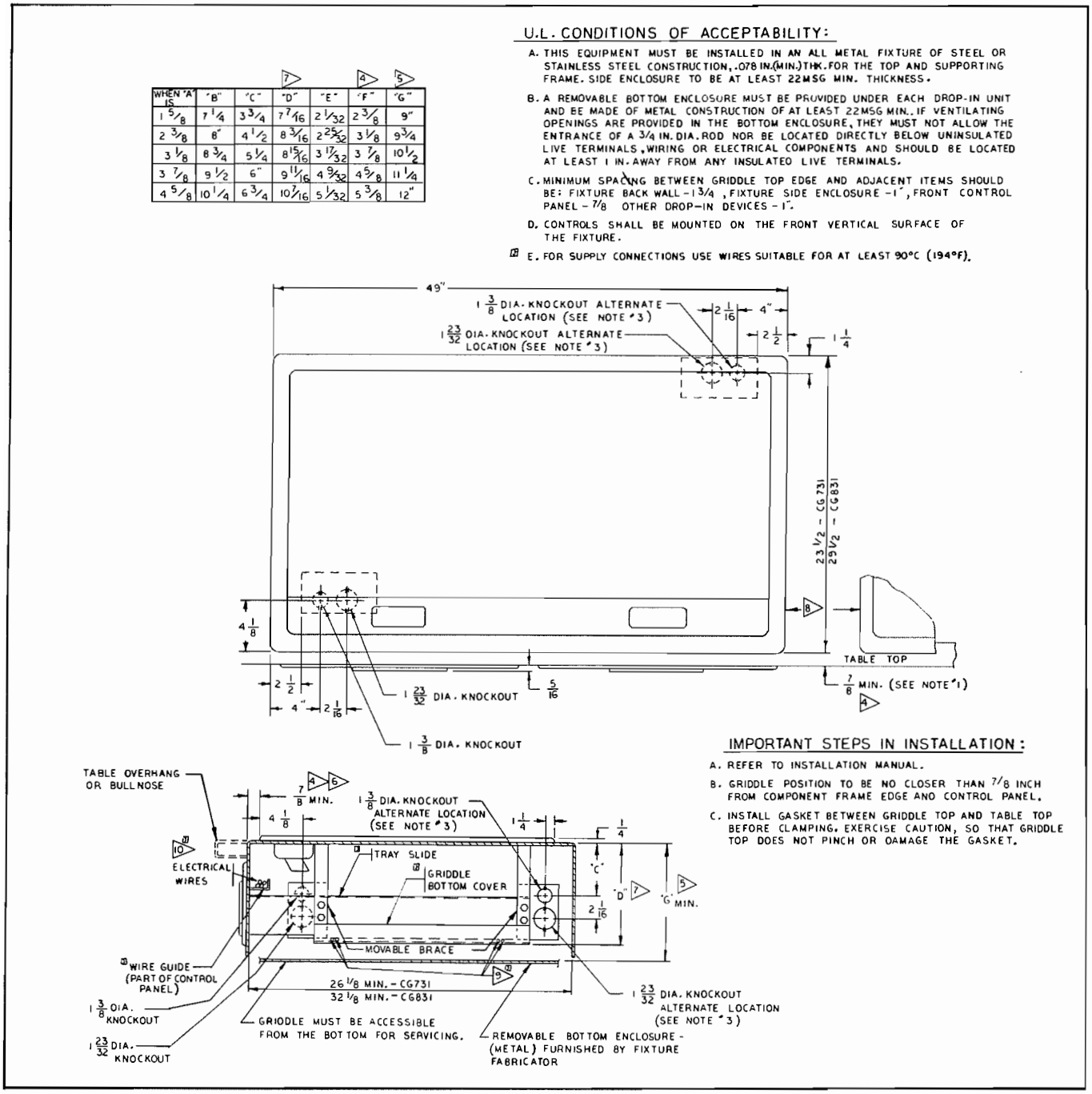

Fig. 1 – 54D108338

NOTES:

1. GRIDDLE CAN BE MOUNTED WITH TROUGH IN THE FRONT OR REAR. DIMENSIONS SHOWN ARE FOR FRONT TROUGH MOUNTING. FOR REAR TROUGH MOUNTING THIS DIMENSION MUST BE BETWEEN 7/8" AND 2".
2. TABLE TOP REINFORCEMENT AND GASKET FURNISHED BY G.E.(NOTE: GASKET IS SHIPPED IN GREASE TRAY.)
3. ELECTRICAL CONNECTION BOX FACTORY LOCATED IN THE FRONT POSITION. CONNECTION BOX CAN BE MOVED TO REAR LOCATION SHOWN.

IMPORTANT

4. ANY DIMENSIONS SMALLER THAN THE MINIMUM OR LARGER THAN THE MAXIMUM SHOWN IN THE TABLE, WILL REQUIRE CORRESPONDING CHANGES BY THE FABRICATOR TO THE GREASE CHUTE BY ADDING AN EXTENSION, ETC. TO PREVENT THE GREASE FROM SPILLING INTO CABINET.
5. ANY DIMENSIONS SMALLER THAN MINIMUM GIVEN, WILL REQUIRE ADDITION PANELS ON SIDES AND BACK TO FACILITATE SERVICING.
6. THE MINIMUM DIMENSION FROM THE BACK OF THE CONTROL PANEL, TO THE FRONT OF THE GRIDDLE TOP IS 7/8" REGARDLESS OF THE SHAPE OF THE BULLNOSE OR TABLE OVERHANG.
7. GRIDDLES ARE SHIPPED FROM THE FACTOPY WITH DIMENSION "D" AT 7 7/16". MOVABLE BRACES PERMIT THE FABRICATOR TO EASILY VARY THIS DIMENSION UP TO 10 7/16" IN INCREMENTS OF 3/4".
8. THE MINIMUM SPACE BETWEEN ADJACENT G.E. GRIDDLES, MUST BE 1 5/8" AND BETWEEN ANY OTHER COMBINATION OF G.E. DROP-IN COOKING EQUIPMENT, MUST BE 1", EXCEPT 2 1/32 FOR CHAR BROILERS. DIMENSIONS OF A LESSER VALUE WILL RESULT IN AN INTERFERENCE BETWEEN DEVICES.
9. ELECTRICAL WIRING CROSSING THE TRAY SLIDE IS TO BE PLACED UNDER THE TRAY SLIDE AND NOT ABOVE IT OR IN OTHER WORDS, PLACE ALL TRANSVERSE WIRING BETWEEN THE TRAY SLIDE AND GRIDDLE BOTTOM COVER.
10. THE INSTALLER OR SERVICER MUST PUT THE ELECTRICAL WIRING NEAR THE CONTROL PANEL INSIDE THE WIRE GUIDE BEFORE ATTACHING THE CONTROL PANEL TO THE FIXTURE FRONT.

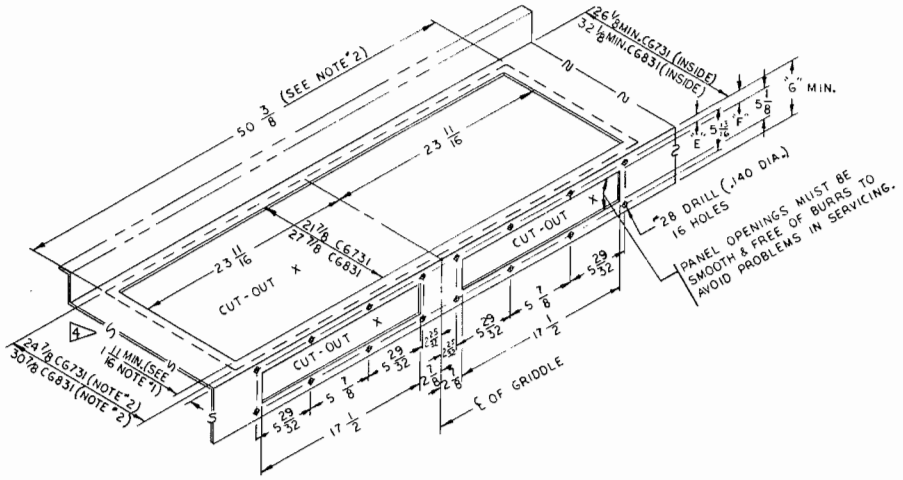

TABLE CUT-OUT DETAIL

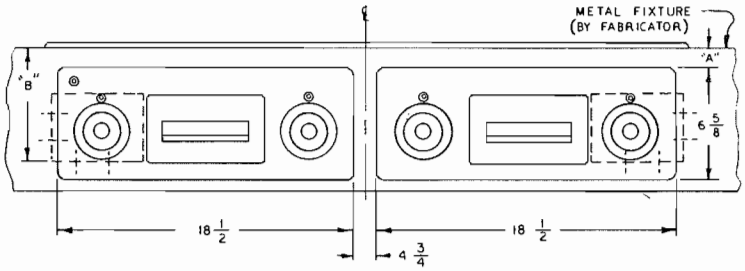

(FRONT VIEW)

Fig. 2 – 54D108338

3. After making the proper layout from Fig. 2, cut the hole in the top of the fixture.

4. Cut the large hole and drill the control panel holes in the front of the fixture from the layout shown in Fig. 2.

5. furnishes with the griddle a stiffening angle or reinforcement frame assembly that is used to reinforce the fixture top. This reinforcement must be spot welded on the perimeter of the counter top cut-out. The upturned flanges on the reinforcement should be located on equal distance from the sides of the cut-out. Figure 3 shows a cut-away view of how the reinforcement frame appears when welded to the fixture top.

NOTE: (1) Before welding the reinforcement frame to the fixture top, assemble the furnished clamps and clamp screws as shown in Fig. 3.
(2) Place one clamp in each of the frame assembly slots. Do not tighten screw.

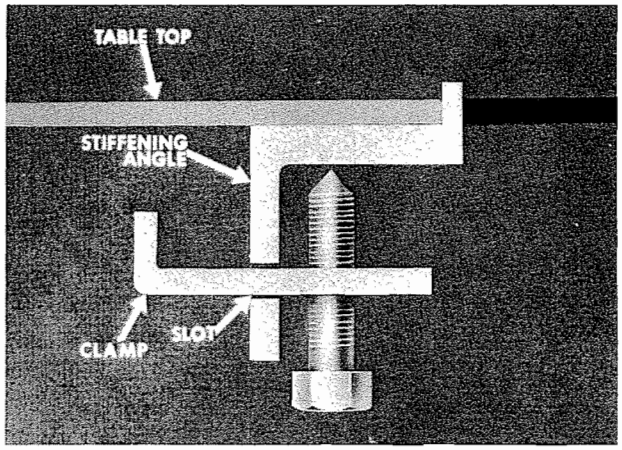

Figure 3

INSTALLATION

With all the large holes cut out, the smaller control panels drilled, and the stiffening angle welded into place, the fixture is now ready to receive the griddle.

1. furnishes a gasket or seal that must be placed around the perimeter of the hole in the top as shown in Fig. 4. This gasket may be temporarily held in place with tape. Do not place the staple securing the gasket ends on or near a corner.

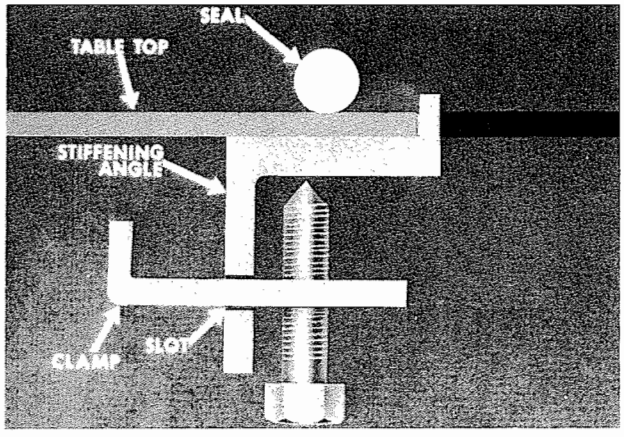

Figure 4

2. A number of clamps, such as the one shown in Fig. 4, appear at intervals along the perimeter. Pull clamps outward so that the griddle frame clears them when it is dropped into place.

3. Drop the griddle into position by lowering it into the fixture top hole. Make sure that the thermostat capillaries are not kinked or pinched when setting the griddle in place. With the griddle in place, the gasket or seal becomes compressed. See Fig. 5.

4. Slide the clamp inward so that it engages the upper part of the protruding angle from the griddle frame. See Fig. 6.

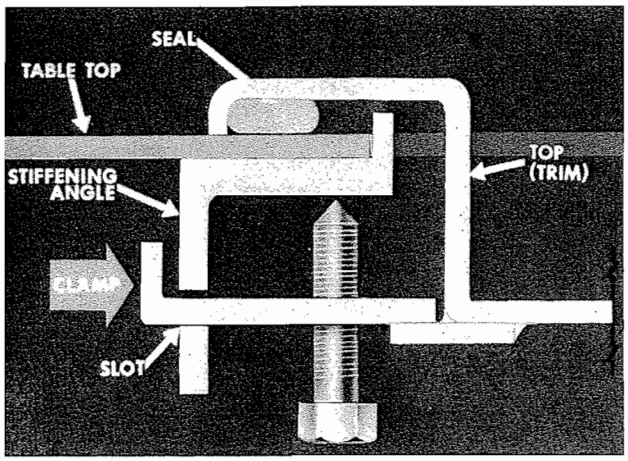

Figure 5

Slide the clamp sideways so that the notch on it locks against the reinforcement angle. This prevents the clamp from sliding out.

5. Tighten the clamp screws against the angle as shown in Figure 6.

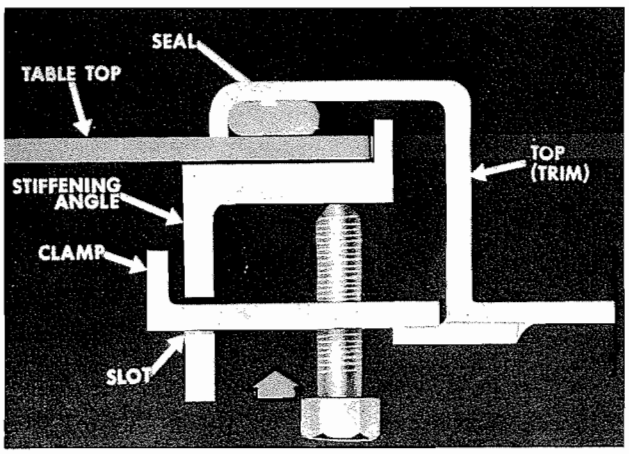

Figure 6

This tightening forces the clamps to press down on the griddle body frame extension. The griddle top is now drawn close to the fixture top, compressing the

gasket and forming an effective grease guard. Tighten at least one screw on each side before tightening all screws. Do not exceed 60 in.-lbs. torque when tightening bolts.

6. Slide the tray slide (grease drawer receptacle) through the cut-out hole on the apron or front of the fixture, resting it on the two "U" braces.

7. Mount the thermostats to the control panel and make the pilot light connections per the accompanying wire diagram. **Before making any electrical connections, check nameplate voltage (located on tray slide under grease drawer) to ensure it matches voltage being applied.**

8. Set the control panel in place and screw it to the apron, using the ½" long thread-forming screws.

9. Pull the tray slide against the back of the control panel and secure it with the appropriate screws.

10. Slide the grease drawer into place.

ELECTRICAL CONNECTIONS

Terminal Box Location. As indicated in Fig. 1, the terminal boxes can be located at either the left front or right rear of the griddle. When shipped from the factory the device has the terminal box attached in the left front position. The box can be relocated to the alternate position by removing two screws.

Loading. Electrical loadings of the griddles covered by this instruction are tabulated below:

Fusing. Griddle is not fused and must be connected to a properly fused circuit.

Grounding. Griddle must be grounded in accordance with the National Electrical Code and applicable local codes.

ELECTRICAL DATA

PHASE-LOADING AND LINE AMPERES 50/60 HZ.																
Model Number	Power Input (KW)	3-Phase Loading			NOMINAL AMPERES PER LINE											
					3-Phase, AC									1-Phase, AC		
		KW Per Phase			208 Volts			230 Volts			460 Volts			208 Volts	230 Volts	460 Volts
		Y-Y	Y-Z	X-Z	X	Y	Z	X	Y	Z	X	Y	Z	AC	AC	AC
CG731	16.0	8.0	4.0	4.0	50.8	50.8	33.4	46.0	46.0	30.2	23.1	23.1	15.1	77.0	69.6	34.8
CG831	21.6	10.8	5.4	5.4	68.7	68.7	45.2	62.3	62.3	40.6	31.2	31.2	20.3	103.9	94.0	47.0

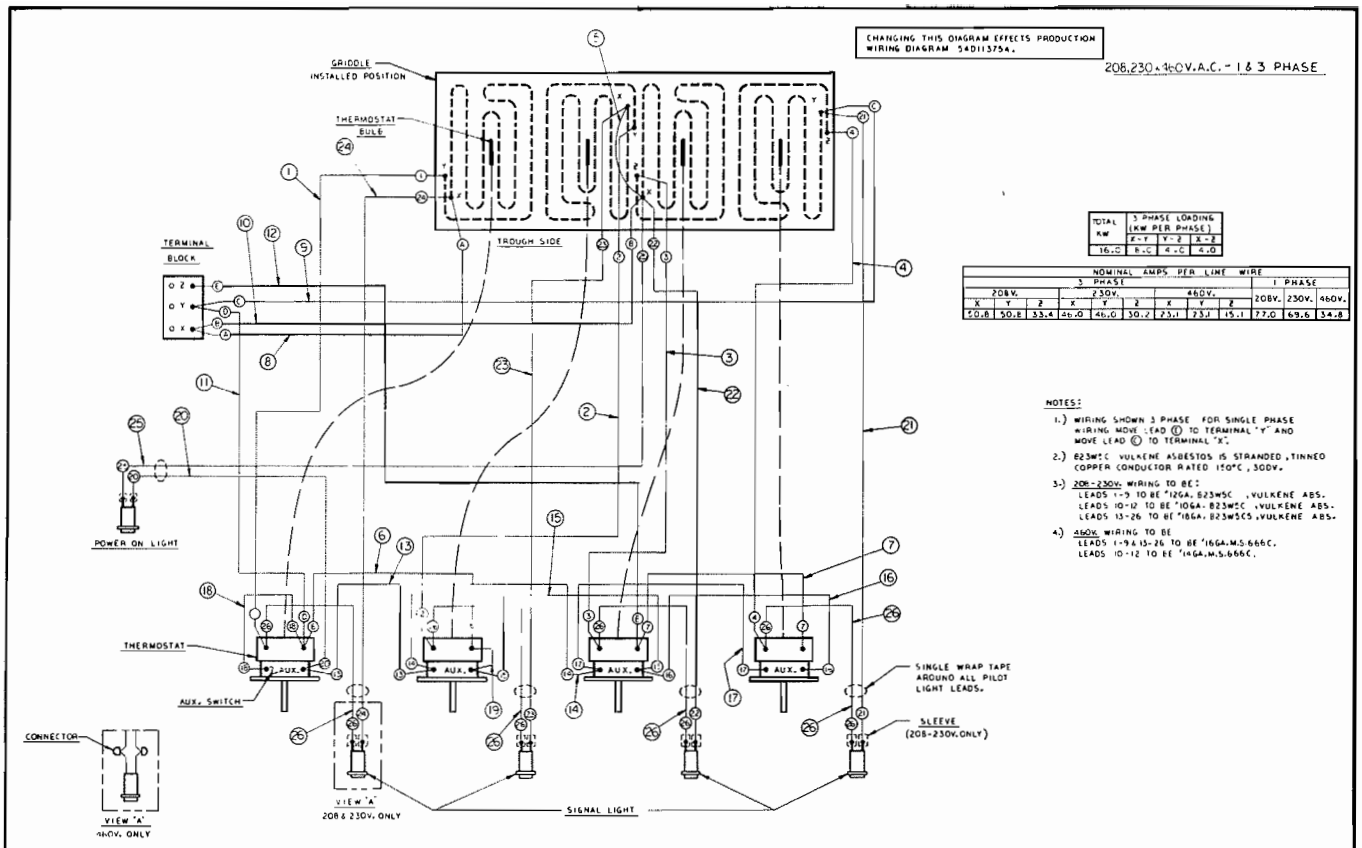

Wiring Diagram – CG731 208/230/460 VAC 1 & 3 Phase – 54D113772

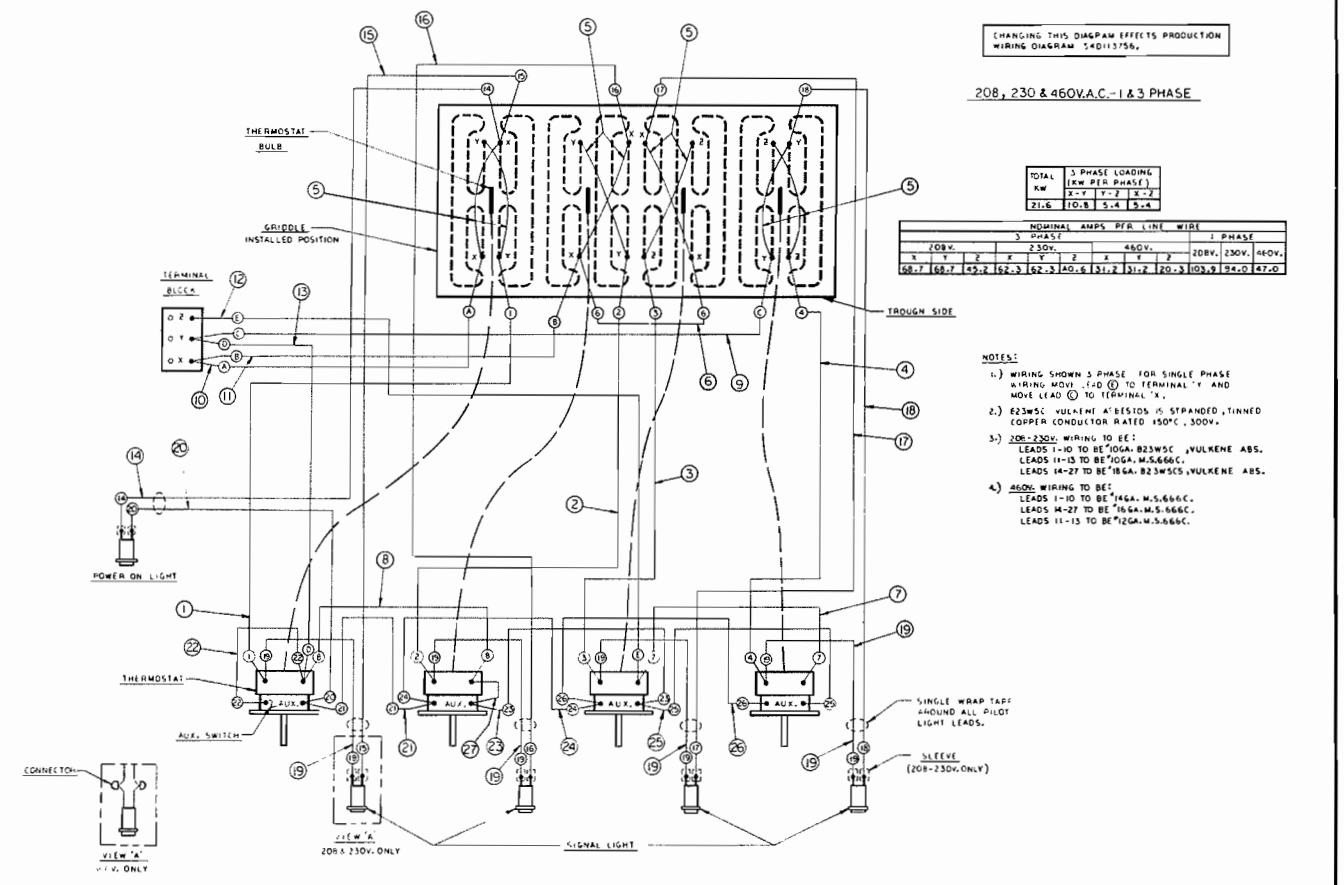

Wiring Diagram – CG831 208/230/460 VAC 1 & 3 Phase – 54D113771

Fig. 7

OWNER'S INFORMATION

CLEANING THE GRIDDLE AFTER UNCRATING

Before using for the first time, be sure to remove the factory-applied rust preventive compound. Add a mild detergent to hot water and wash the grid well. Rinse with a clean, damp cloth and wipe dry.

THE CONTROLS

The heat of the griddle surface is controlled by turning the dial knob (recessed in the front control panel). When at least one control is turned on, a signal light in the upper left hand corner of the control panel will glow continuously. Thus the operator knows at a glance whether or not the griddle is energized. Separate signal light cycles with each control. Whenever the thermostat calls for heat, the signal light associated with it will be on. Each thermostat controls twelve inches of griddle surface width. Thermostat temperature range is 200-450F ± 10F.

SEASONING THE GRIDDLE SURFACE

After thorough cleaning, the griddle is ready for seasoning. Preheat to 400F. When the dialed temperature is reached as indicated by the signal lights going off, spread a light film of cooking oil or fat over the entire surface of the griddle. In two minutes, wipe the griddle clean of excess oil. Repeat this operation. The griddle is now ready for use.

OPERATING INSTRUCTIONS

1. Preheat Griddle (preheat time, 77F-350F, approximately 8 minutes) – Set the thermostat dials at the correct griddling temperature for the food to be cooked. A red light will flash on automatically for each section of the griddle when the dial is set, and will flash off when the section has reached the dialed temperature. (The signal light will flash on and off during the cooking operation to show that correct temperature is being maintained). You are now ready to load the griddle.
2. Load Griddle – After preheating, load griddle and cook according to recipe. Turn foods halfway through cooking time, unless otherwise specified in recipe.
3. Economy Hint – Turn griddle OFF (or to lowest thermostat setting) during idle periods.

CARE AND CLEANING

IMPORTANT: At the end of each day's operation, turn all temperature controls to "OFF".

AFTER EACH COOKING LOAD scrape the griddle surface with scraper or rigid spatula to remove excess fat and food particles. ONCE A DAY or whenever necessary, thoroughly clean and wipe out the grease trough. As necessary during use, wipe out accumulated material to provide good drainage. Remove grease drawer, empty and wash. In general, soap and water with the aid of a sponge or soft cloth will clean the drawer thoroughly. Wipe clean with a damp cloth, and dry. Clean control panel with a damp cloth and dry.

EACH WEEK or whenever necessary, clean griddle thoroughly. If desired, use a pumice or griddle stone over surface. Rub with the grain of the metal while still warm. Avoid steel wool! After each thorough cleaning, the cooking surface must be re-seasoned. To remove control knobs for cleaning, pull straight out. Wash in soapy water. Rinse, dry and replace on shaft.

SERVICING

Your Griddle is covered by a one year written warranty on parts and labor. If this device should require service, call your local Commercial Equipment dealer or authorized service station. The nameplate indicating the pertinent electrical data of the griddle is located in the front of the grease drawer receptacle and can be seen readily when the drawer is removed.

CAPACITIES	MODEL CG731 Quant. Per Load	MODEL CG731 Approx. Hourly Production	MODEL CG831 Quant. Per Load	MODEL CG831 Approx. Hourly Production	BOTH MODELS Cooking Time & Temp.
MEATS					
Hamburgers (2½-oz. servings, 3½" diam.)	65	945+	86	1300+	3 min. at 350F
Minute Steaks (4-oz. steaks, ½" thick)	24	360+	32	400+	4 min. at 350F
Beef Tenderloin (5-oz. steaks, 1" thick)	48	280+	64	370+	8 min. at 350-360F
Liver (3-oz. slices, 3/8" thick)	36	450+	48	600+	3-4 min. at 350F
Bacon (22 to 32 slices per lb.)	3½ lbs.	30 lbs.	4-2/3 lbs.	40 lbs.	5-6 min. at 350F
Pork Link Sausages (Fresh, 1¼-oz., 3½" long)	12 lbs.	70 lbs.	16 lbs.	93 lbs.	10 min. at 325F
Hot Dogs (split)	64	900+	86	1200+	3 min. at 350F
Ham Steaks (1-lb., tenderized, ½" thick)	24	325+	32	433+	4 min. at 350F
OTHER FOODS					
Eggs, Fried	64	900+	86	1200+	3 min. at 300F
Pancakes (4" diam.)	40	450+	53	600+	3-4 min. at 360-375F
Fried Potatoes, Blanched (Servings)	51	750+	67-80	1000+	4 min. at 375F
Fried Onions, Blanched (Servings)	75-77	1100+	100-106	1470+	3 min. at 340F
Hamburger Buns (3½" diam., split)	32	600	43	852+	2 min. at 350F

RECOGNIZED UNDER COMPONENT PROGRAM of UNDERWRITERS' LABORATORIES, INC.
(See Fig. 1)

ACCESSORY

Removable stoinless steel splatter guard, 3½ in. high. Model CX346 (for CG731). Model CX347 (for CG831).

WEIGHTS, DIMENSIONS AND DATA

MODEL	GRIDDLE SURFACE Width (in.)	Depth (in.)	Area (sq. in.)	GREASE DRAWER CAP'Y (GAL.)	PREHEAT TIME TO 350F (min)	SHIPPING WT. (Lbs.)	INSTALLED WT. (Lbs.)
CG731	46-1/2	17-15/16	834	1	8	220	190
CG831	46-1/2	23-15/16	1110	1.3	8	265	235