CATALOG OF REPLACEMENT PARTS



HS SERIES AUTOMATIC PORTION SLICERS

ML-141166 **HS7-1PS**

A product of HOBART 701 S. RIDGE AVENUE TROY, OHIO 45374-0001

FORM 43364 Rev. B (September 2020)

 © HOBART 2020

Table of Contents

5 ELEVATED DISPLAY (7 IN. VERTICAL)
7 SCALE ASSEMBLY
9 KNIFE DRIVE MOTOR
11 TOP COVER AND RING GUARD
13 KNIFE AND KNIFE SHAFT
15 GAUGE PLATE AND INDEX
17 PRODUCT TRAY AND MEAT GRIP ASSEMBLY
19 KNIFE SHARPENER ASSEMBLY
21 TRANSPORT CARRIAGE ASSEMBLY
23 AUTO DRIVE ASSEMBLY
25 AUTO DRIVE LEVER
27 CONTROLS AND ELECTRICAL COMPONENTS
29 WIRE HARNESSES
31 BASE AND BOTTOM COVER
33 ACCESSORIES

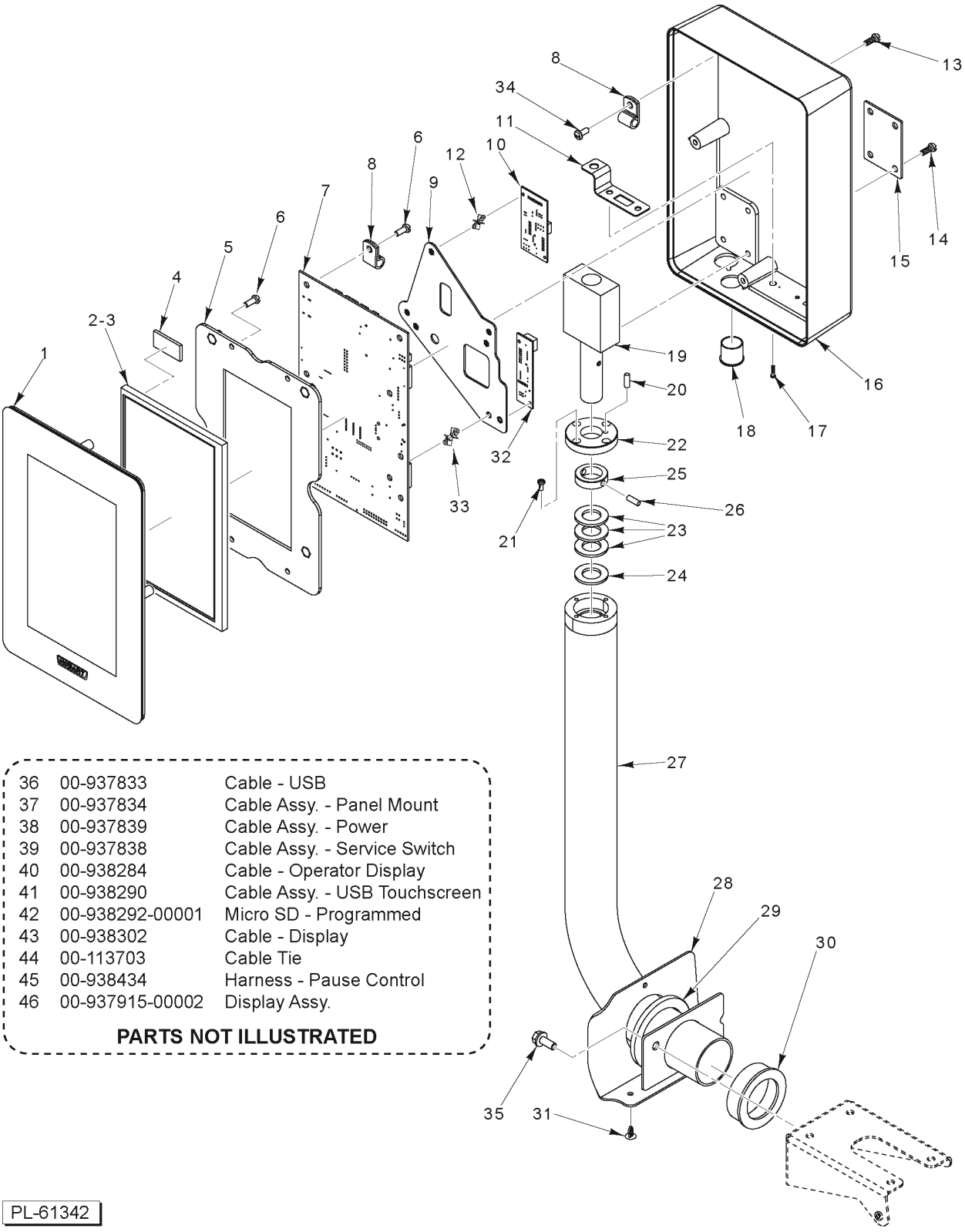

36	00-937833	Cable - USB
37	00-937834	Cable Assy. - Panel Mount
38	00-937839	Cable Assy. - Power
39	00-937838	Cable Assy. - Service Switch
40	00-938284	Cable - Operator Display
41	00-938290	Cable Assy. - USB Touchscreen
42	00-938292-00001	Micro SD - Programmed
43	00-938302	Cable - Display
44	00-113703	Cable Tie
45	00-938434	Harness - Pause Control
46	00-937915-00002	Display Assy.

PARTS NOT ILLUSTRATED

PL-61342

ELEVATED DISPLAY (7 IN. VERTICAL)

ELEVATED DISPLAY
(7 IN. VERTICAL)

ILLUS. PL-61342	PART NO.	NAME OF PART	AMT.
1	00-937910	Touchscreen & Plate Assy.	1
2	00-447156	Display (7 In.)	1
3	00-938622	Display, I Assy. (Incls. Item 4)	1
4	00-448342	Pad - Foam	2
5	00-937867	Bracket - Board Mounting	1
6	SC-018-33	Mach. Screw 8-32 x 5/16 Phil. Pan Hd.	8
7	00-448431	Board - Main Control	1
8	00-078752-00003	Clamp - Cable	2
9	00-938688	Plate, Auxiliary Board (Incls. Items 12 & 33)	1
10	00-447162	Board Assy.	1
11	00-937887	Bracket - Switch	1
12	00-938620	PCB Support, .125	4
13	SC-093-04	Mach. Screw 8-32 x 1/2 Phil. Pan Hd. (SST)	4
14	SC-053-02	Mach. Screw 10-24 x 1/2 Slotted Truss Hd. (SST)	4
15	00-937868	Plate - Display Mounting	1
16	00-937864	Housing - Display	1
17	SC-132-73	Screw	2
18	PB-004-35	Plug - Button (1/2)	1
19	00-937905	Block - Swivel Assy.	1
20	00-447143	Pin - Dowel	1
21	SC-132-72	Screw	4
22	00-447710	Cap - Display Mount	1
23	00-447714	Washer - Spring	3
24	00-447713	Washer - Thrust	1
25	00-447712	Collar	1
26	SC-088-55	Set Screw 10-32 x 3/16 Hex Hdls., Half Dog Pt.	2
27	00-937820	Tube Assy.	1
28	00-938076	Cover - Tube Attachment	1
29	00-938208	Seal - Tube	1
30	00-938286	Grommet - Tube	1
31	00-938077	Rivet - Snap	3
32	00-449512	Board - Touchscreen Control	1
33	00-938621	PCB Support, .187	3
34	SD-037-71	Self-Tapping Screw 6-19 x 5/16 Phil. Pan Hd.	1
35	SC-129-49	Mach. Screw 1/4-20 x 1/2 Hex Washer Hd. (SST)	2
36	00-937833	Cable - USB	1
37	00-937834	Cable Assy. - Panel Mount	1
38	00-937839	Cable Assy. - Power	1
39	00-937838	Cable Assy. - Service Switch	1
40	00-938284	Cable - Operator Display	1
41	00-938290	Cable Assy. - USB Touchscreen	1
42	00-938292-00001	Micro SD - Programmed	1
43	00-938302	Cable - Display	1
44	00-113703	Cable Tie	AR
45	00-938434	Harness - Pause Control	1
46	00-937915-00002	Display Assy.	1

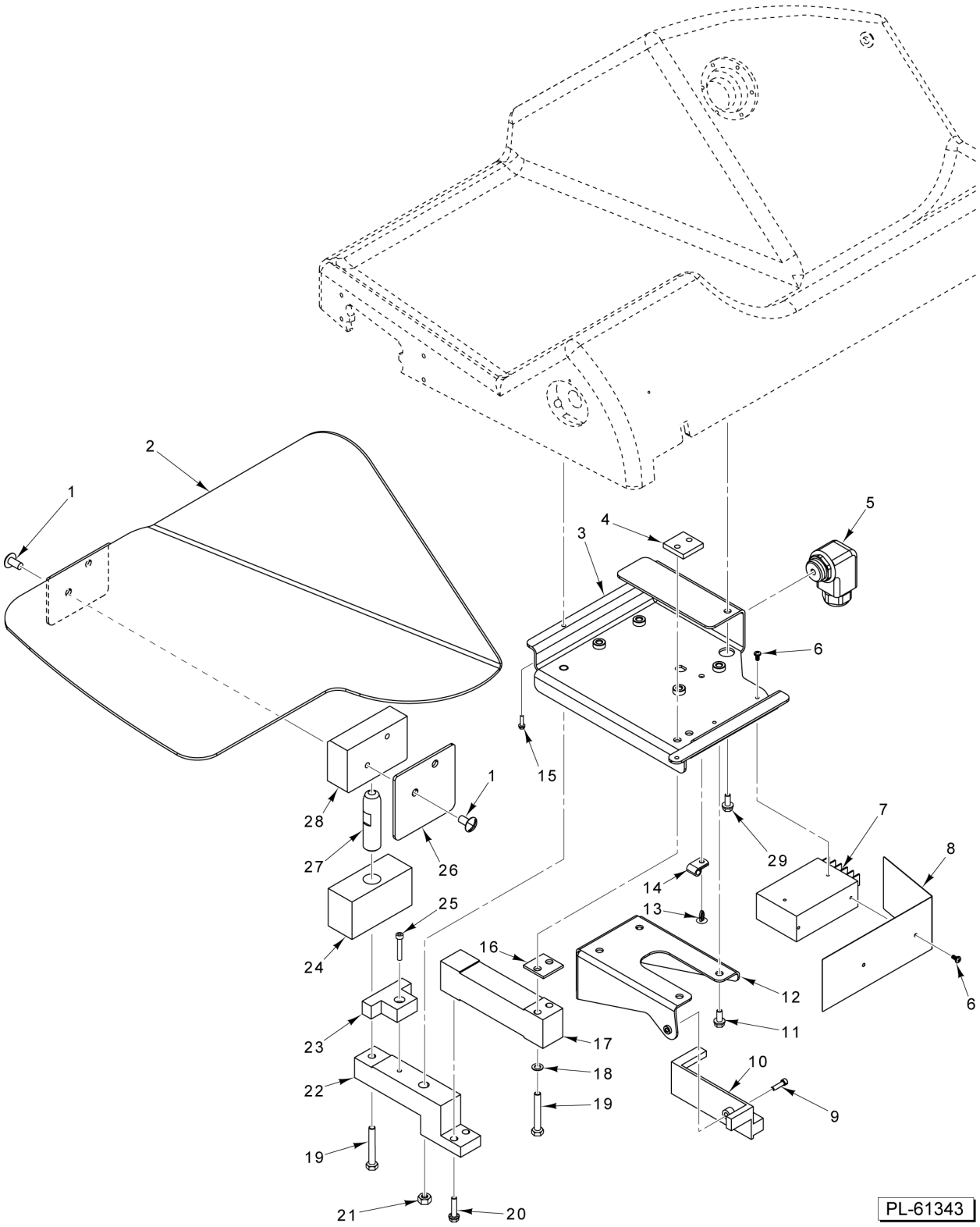

SCALE ASSEMBLY

SCALE ASSEMBLY

ILLUS. PL-61343	PART NO.	NAME OF PART	AMT.
1	SC-053-41	Mach. Screw 1/4-20 x 1/2 Slotted Truss Hd. (SST)	4
2	00-937816	Scale - Platter	1
3	00-937893	Scale - Bracket	1
4	00-937896	Plate - Threaded	1
5	00-938166	Relief - Strain	1
6	SA-021-31	Mach. Screw M3 x 1/2 x 6 mm Pan Hd	4
7	00-937829	Power Supply	1
8	00-938053	Guard - Splash	1
9	SC-059-13	Screw Cap 8/32 x 1/2 Hex Socket Hd. (SST)	1
10	00-446167	Board Assy. - USB Weigher	1
11	SC-132-71	Mach. Screw 1/4-20 x 3/8	4
12	00-938049	Bracket - Tube	1
13	00-938272	Rivet - Snap	1
14	00-078752-00003	Clamp - Cable	1
15	SD-038-16	Self-Tapping Screw 6-32 x 3/8 Hex Washer Hd., Type RL	2
16	00-937795	Spacer	1
17	00-443075	Load Cell - Multiple Range (15 kg)	1
18	WL-006-17	Lockwasher 1/4 Helical (SST)	2
19	SC-041-08	Cap Screw 1/4-20 x 2 Hex Hd. (SST)	3
20	SC-129-73	Mach. Screw 1/4-20 x 1 Hex Washer Hd. (SST)	2
21	NS-049-54	Nut, Lock SP 1/4-20	1
22	00-937813	Arm - Lower Scale	1
23	00-938050	Stop - Loadcell	1
24	00-937895	Extension - Loadcell Block	1
25	SC-123-01	Cap Screw 10-24 x 3/4 Hex Socket Hd. (SST)	1
26	00-937892	Support - Platter	1
27	00-937794	Pin - Locating	1
28	00-937811	Block - Platter Mount	1
29	SD-039-68	Self-Tapping Screw 10-24 x 3/8 Hex Washer Hd., Type RL	1

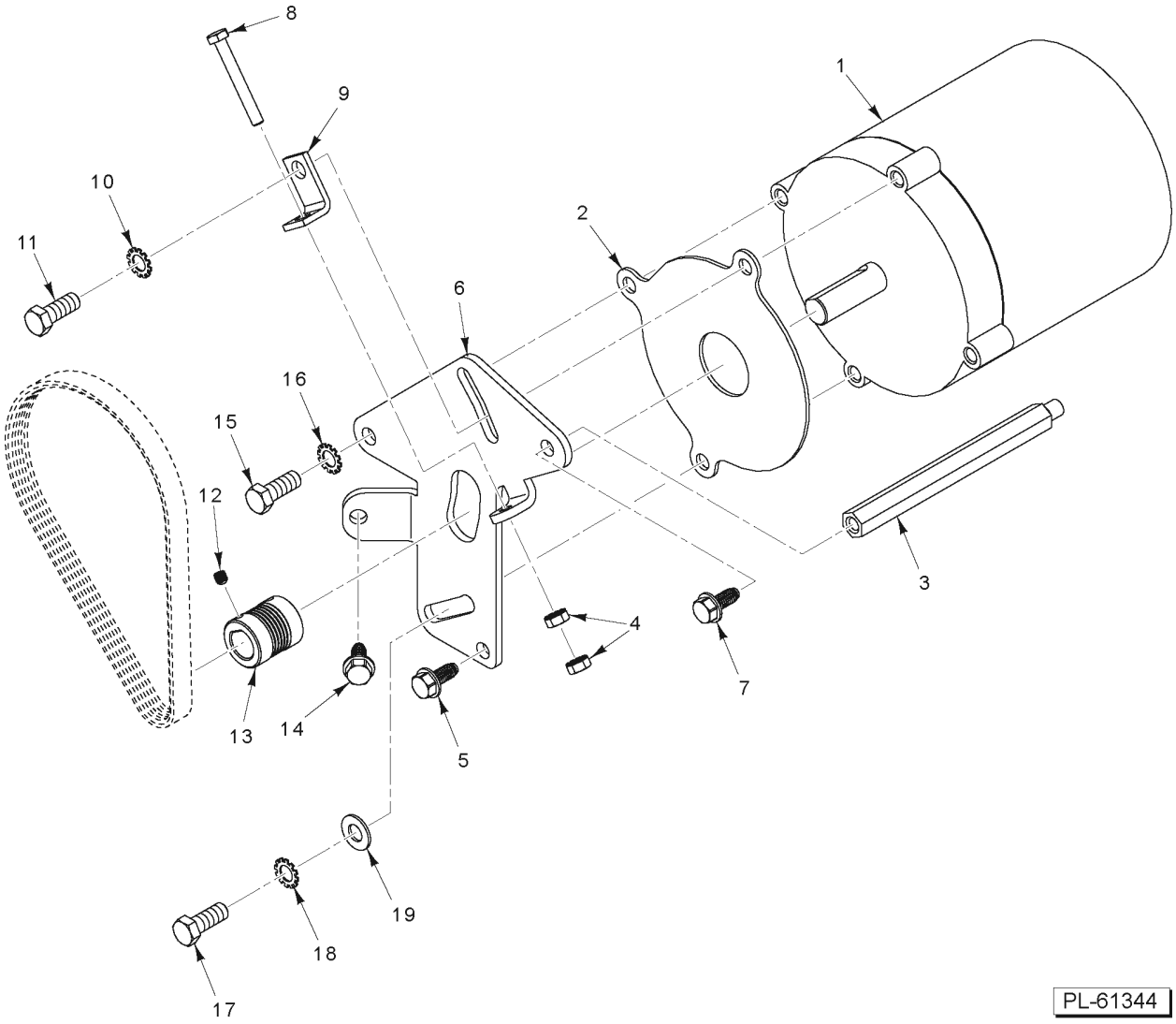

KNIFE DRIVE MOTOR

KNIFE DRIVE MOTOR

ILLUS. PL-61344	PART NO.	NAME OF PART	AMT.
1	00-438846-00001	Motor (60 Hz.)	1
2	00-439032	Gasket - Motor (For S/N 311598700 and Below)	1
3	00-438984	Standoff	1
4	NS-044-14	Nut 1/4-20 Hex KEPS	2
5	SD-038-18	Self-Tapping Screw 5/16-18 x 3/4 Hex Washer Hd., Type RL	1
6	00-477760	Plate - Motor	1
7	SD-038-18	Self-Tapping Screw 5/16-18 x 3/4 Hex Washer Hd., Type RL	1
8	SC-118-98	Cap Screw 1/4-20 x 2 Hex Hd	1
9	00-477532	Bracket - Tensioner Adjustment	1
10	WL-007-25	Lockwasher 3/8 External	1
11	SC-037-73	Cap Screw 3/8-16 x 1 Hex Hd	1
12	SC-123-65	Set Screw 1/4-28 x 3/8 Hex Hdls., Flat Pt. (SST)	2
13	00-438844-00002	Sheave - Poly "V"	1
14	SD-038-18	Self-Tapping Screw 5/16-18 x 3/4 Hex Washer Hd., Type RL	1
15	SC-037-73	Cap Screw 3/8-16 x 1 Hex Hd	1
16	WL-007-25	Lockwasher 3/8 External	1
17	SC-037-73	Cap Screw 3/8-16 x 1 Hex Hd	1
18	WL-007-25	Lockwasher 3/8 External	1
19	WS-018-22	Washer	1

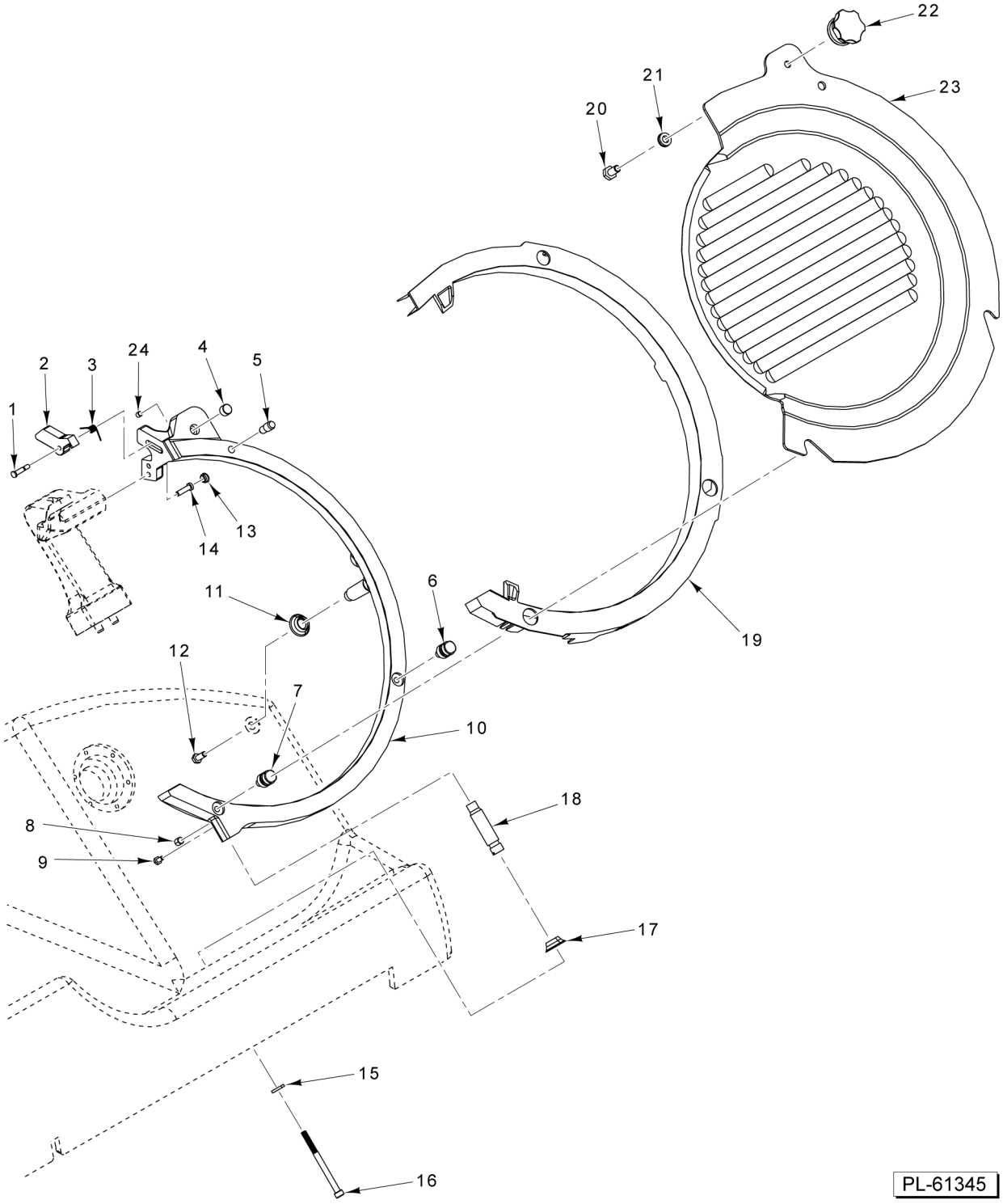

TOP COVER AND RING GUARD

TOP COVER AND RING GUARD

ILLUS. PL-61345	PART NO.	NAME OF PART	AMT.
1	00-914411	Pin - Lock	1
2	00-914409-00003	Lock - Knife Edge Protector	1
3	00-914425	Lock - Torsion Spring	1
4	00-915319	Magnet	1
5	00-915299	Pin - Top Cover	1
6	00-915378	Pin - Tapered	1
7	00-915378	Pin - Tapered	1
8	00-914634	Magnet - Product Deflector	1
9	SC-130-21	Mach. Screw 6-32 x 5/16 Hex Hd. (SST)	1
10	00-915390	Ring Guard Assy. (Incls. Items 1 thru 9 & 24)	1
11	00-914429	Boot - Ring Guard	1
12	SC-037-80	Cap Screw 10-24 x 1/2 Hex Hd	1
13	00-914430	Plug	2
14	SC-129-78	Cap Screw 8-32 x 5/8 Hex Socket Hd	2
15	WS-031-78	Washer	1
16	SC-131-56	Cap Screw 10-24 x 2-1/2 Hex Socket Hd	1
17	00-914429	Boot - Ring Guard	1
18	00-915300	Post - Ring Guard	1
19	00-914408	Cover - Ring Guard	1
20	SC-131-80	Cap Screw 1/4-20 x 1/2 Hex Hd. (SST)	1
21	WS-031-80	Washer	1
22	00-915297	Knob - Top Cover	1
23	00-915391	Top Cover Assy. (Incls. Items 20 thru 22)	1
24	SC-131-63	Set Screw 1/4-20 x 1/4 Hex Hdls., Flat Pt. (SST)	1

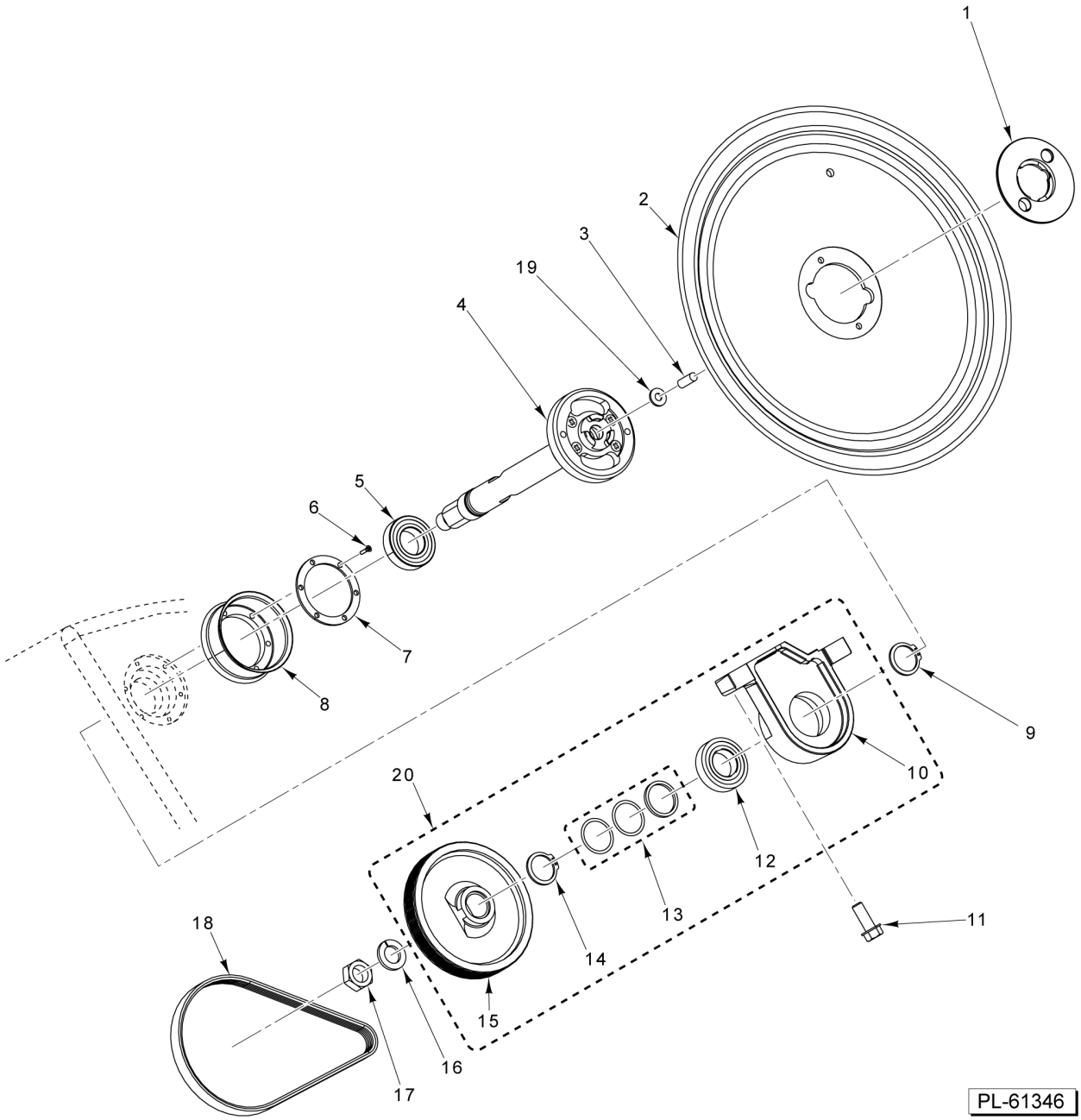

KNIFE AND KNIFE SHAFT

KNIFE AND KNIFE SHAFT

ILLUS. PL-61346	PART NO.	NAME OF PART	AMT.
1	00-914422	Plate - Knife Removal Clamp	1
2	00-914753	Knife - Slicer Pack (Removable)	1
3	00-915308	Plug - Rulon	1
4	00-915421-00002	Knife Shaft Assy. (Removable) (Non-Ajustable Rulan Plug) (Incls. Item 5)	1
5	BB-021-66	Bearing - Ball	1
6	SC-131-62	Cap Screw 8-32 x 7/8 Hex Socket Hd. (SST)	6
7	00-915342	Ring - Boot	1
8	00-915341	Boot - Knife Shaft	1
9	RR-009-07	Retaining Ring	1
10	00-875180-00002	Retainer - Lower Hub & Bearing (Incls. Item 12)	1
11	SC-123-50	Cap Screw 3/8-16 x 1 Hex Washer Hd	2
12	BB-021-66	Bearing - Ball	1
13	00-937970	Washer Assy	1
14	RR-012-48	Retaining Ring	1
15	00-937968	Sheave - Poly "V" Large 6 Groove	1
16	WL-004-17	Lockwasher 5/8 Light	1
17	NS-017-41	Jam Nut 5/8-18 Hex (SST)	1
18	00-438845	Belt - Poly "V"	1
19	WS-031-82	Washer 0.289 X 0.365 X 0.016 (SST)	1
20	00-937969	Kit - Lower Hub and Bearing (Incls. Items 10 & 12 thru 15)	1

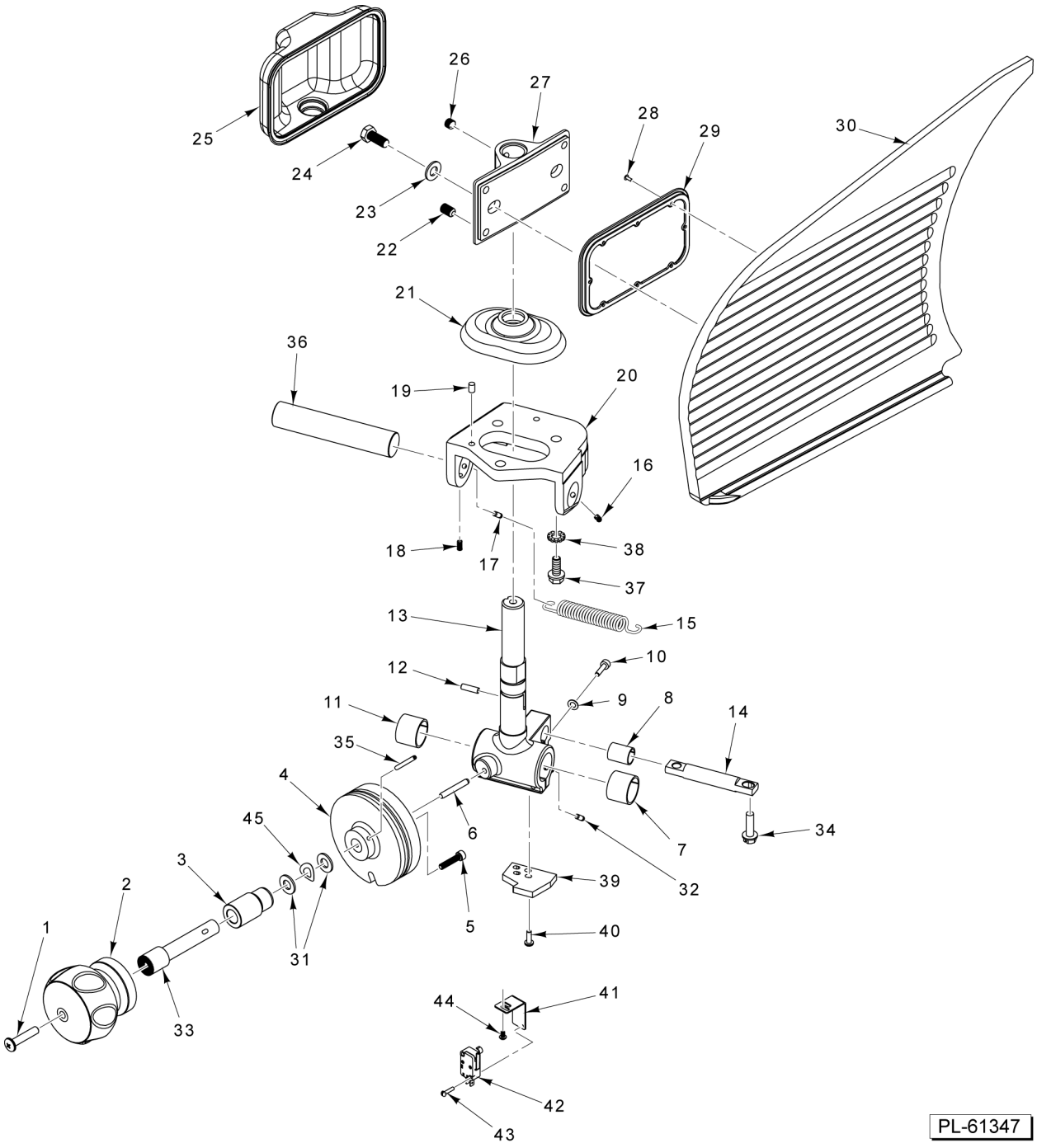

GAUGE PLATE AND INDEX

GAUGE PLATE AND INDEX

ILLUS. PL-61347	PART NO.	NAME OF PART	AMT.
1	SC-125-95	Mach. Screw 1/4-20 x 1-1/4 Phil. Pan Hd. (SST)	1
2	00-913102-00261	Kit - Knob Index	1
3	00-915304	Bushing - Index	1
4	00-915335-00001	Cam - Index	1
5	SC-131-75	Cap Screw 10-32 x 7/8 Hex Socket Hd. (SST)	1
6	00-478461	Pin - Index Cam	1
7	00-478426	Bushing - Index Slide	1
8	00-478425	Bushing - Anti-Rotation Rod	1
9	WS-008-13	Washer - Retaining	3
10	SC-124-46	Cap Screw 10-24 x 3/4 Hex Socket Hd	3
11	00-478426	Bushing - Index Slide	1
12	RP-002-35	Roll Pin 3/16 Dia. x 5/8 Lg. (SST)	1
13	00-915306-00002	Slide - Index (Incls. Items 6 thru 12 & 32)	1
14	00-478415	Rod - Index Anti-Rotation	1
15	00-478432	Spring - Index Backlash	1
16	SC-088-71	Set Screw 8-32 x 3/8 Hdls., Flat Pt	1
17	PG-011-38	Pin - Grooved 5/32 x 19/32 (SST)	1
18	SC-088-71	Set Screw 8-32 x 3/8 Hdls., Flat Pt	1
19	00-011800-00305	Pin - Dowel 1/4 x 3/4	2
20	00-439072-00003	Support - Slide Index (Incls. Item 19)	1
21	00-915313	Boot - Index Slide	1
22	SC-131-74	Set Screw 5/16-24 x 1/2 Hex Hdls., Flat Pt	4
23	WS-005-32	Washer (SST)	2
24	SC-062-72	Cap Screw 5/16-24 x 3/4 Hex Hd	2
25	00-915301	Boot - Gauge Plate	1
26	SC-117-68	Set Screw 5/16-24 x 3/8 Hex Hdls., Cone Pt	3
27	00-915289-00002	Support - Gauge Plate	1
28	00-121676-00001	Self-Tapping Screw #2 x 1/4 Truss Hd	8
29	00-915293	Bracket - Gauge Plate Boot	1
30	00-915282-00001	Plate - Gauge	1
31	WS-030-58	Washer 0.500 x 0.750 x 0.010 (SST)	5
32	PG-011-19	Pin - Grooved 5/32 x 1/2 (SST)	1
33	00-937742	Shaft - Knob	1
34	SD-038-14	Self-Tapping Screw 1/4-20 x 7/8 Hex Washer Hd., Type RL (SST)	2
35	RP-003-12	Roll Pin 1/8 Dia. x 1-1/4 Lg	1
36	00-438886	Rod - Index Slide	1
37	SC-062-81	Cap Screw 5/16-18 x 7/8 Hex Hd	3
38	WL-007-20	Lockwasher 5/16 External Shakeproof	3
39	00-915358	Bracket (Interlock Stop)	1
40	SC-093-05	Mach. Screw 8-32 x 1/2 Slotted Pan Hd. (SST)	4
41	00-915291	Bracket (Close to Stop)	1
42	00-087711-00358	Switch - Miniature (Carriage Tray Interlock) (1S)	1
43	SC-021-02	Mach. Screw 4-40 x 1/2 Slotted Rd. Hd. (SST)	2
44	SC-125-33	Mach. Screw 6-32 x 1/4 Phil. Rd. Hd. (SST)	1
45	SL-005-18	Spring - Loading (0.523 I.D., 0.865 O.D., 0.010 Thk.) (SST) (Wavy)	1

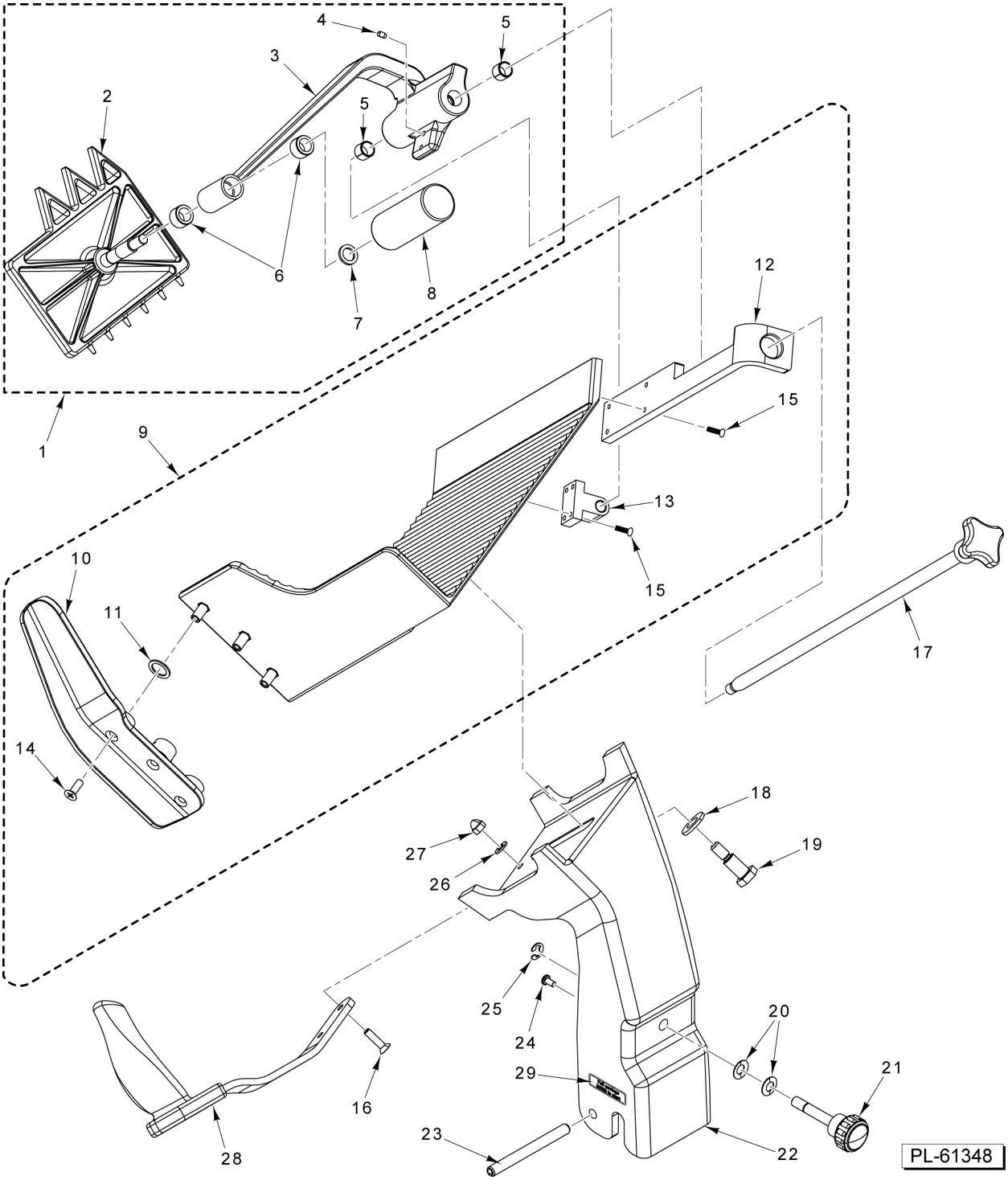

PRODUCT TRAY AND MEAT GRIP ASSEMBLY

PRODUCT TRAY AND MEAT GRIP ASSEMBLY

ILLUS. PL-61348	PART NO.	NAME OF PART	AMT.
1	00-915395-00003	Meat Grip Assy. (Incls. Items 2 thru 8)	1
2	00-915257	Grip - Meat	1
3	00-915597	Meat Grip Arm Assy. (Incls. Items 4 thru 6)	1
4	00-914446	Pad - Stop	2
5	00-914452	Bearing - Grip Arm	2
6	00-478254	Bushing	2
7	WS-021-21	Washer 0.500 x 0.750 x 0.093 (Nylon)	1
8	00-914937	Handle - Meat Grip	1
9	00-915393	Product Tray Assy. (Incls. Items 10 thru 15)	1
10	00-915268	Guard - Thumb	1
11	00-915275	Washer (Rubber)	3
12	00-915259	Bracket - Support	1
13	00-915230-00002	Block - Support	1
14	SC-131-61	Mach. Screw 1/4-20 x 3/4 Phil. Flat Hd. (SST)	3
15	SC-132-66	Mach. Screw 8-32 x 5/8 Slotted Flat Hd. (SST)	8
16	SC-125-93	Mach. Screw 1/4-20 x 1 Phil. Flat Hd. (SST)	2
17	00-915286	Slide Rod Assy.	1
18	WS-031-53	Washer 0.531 x 1.063 x 0.109 (SST)	2
19	00-915407	Shoulder Screw 1/2 Dia. 3/8-16	2
20	00-478021	Washer - Belleville	2
21	00-875450	Knob - Support Tray Assy.	1
22	00-915400-00001	Tray Support Assy. (Incls. Items 23 & 24)	1
23	RP-006-51	Pin - Roll (0.375)	1
24	00-439045	Stud - Drive	2
25	RR-012-17	Retaining Ring	1
26	WS-003-49	Washer 0.266 x 0.563 x 0.062 (SST)	2
27	NS-025-04	Crown Nut 1/4-20 (SST)	2
28	00-915296	Handle - Tray	1
29	00-477733	Label - Start (Home)	1

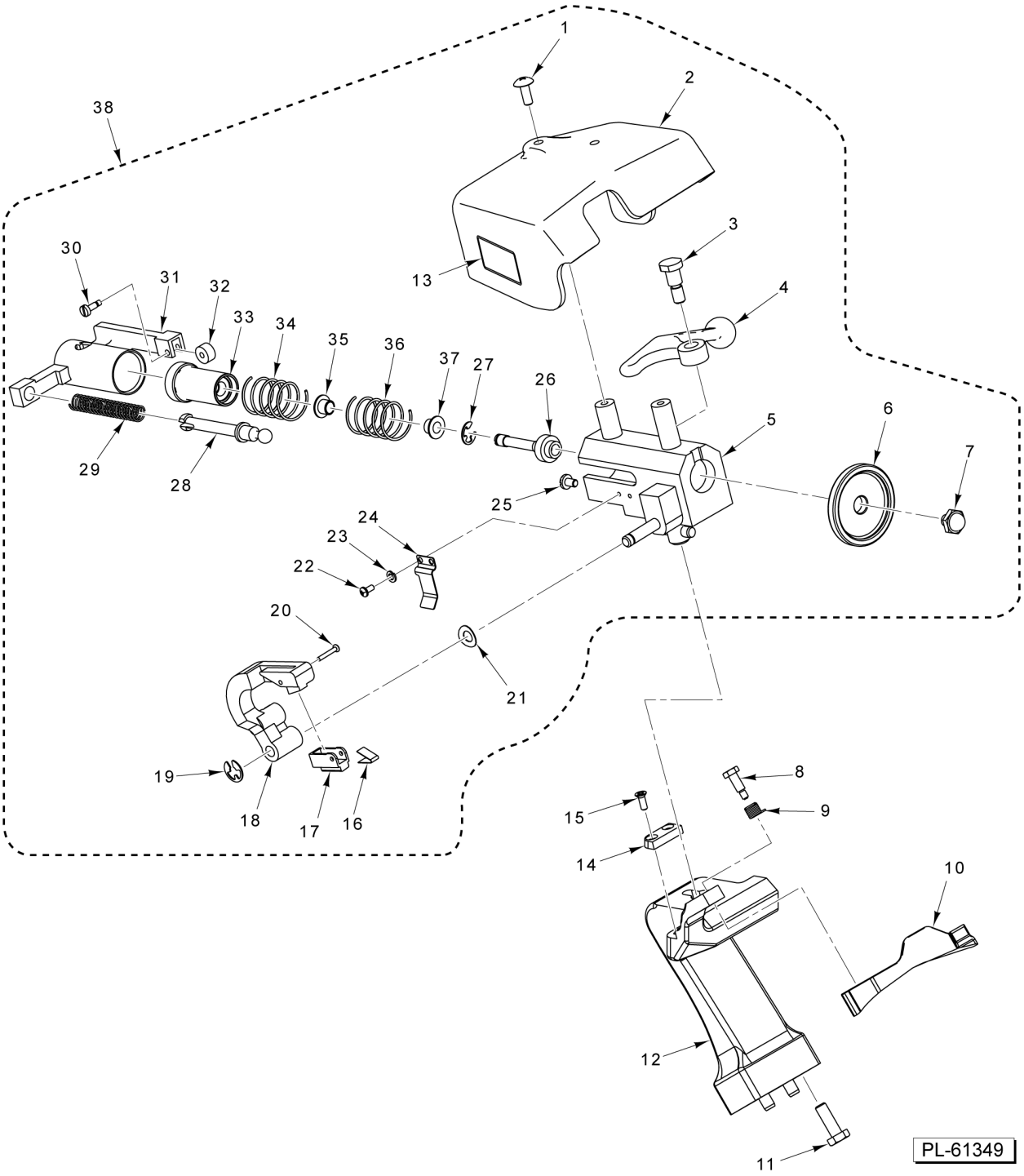

KNIFE SHARPENER ASSEMBLY

KNIFE SHARPENER ASSEMBLY

ILLUS. PL-61349	PART NO.	NAME OF PART	AMT.
1	SC-129-63	Mach. Screw 10-24 x 1/2 Phil. Truss Hd. (SST)	2
2	00-914682	Cover & Plate Assy. (Incls. Item 13)	1
3	00-479953	Shoulder Screw 1/4-20 x 3/8	1
4	00-875359	Handle - Sharpener Cam	1
5	00-914565	Housing & Stud Assy	1
6	00-439691	Stone Service Kit	1
7	00-914327	Screw - Pushing Cover	1
8	00-914410	Pin - Knife Protector	1
9	00-914424	Spring - Knife Protector	1
10	00-914504-00003	Protector - Knife Edge	1
11	SC-118-19	Cap Screw 1/4-20 x 3/4 Hex Hd	2
12	00-915290-00002	Mount - Sharpener Assy. (Incls. Item 11)	1
13	00-914681	Label - Instruction	1
14	00-914687	Spacer - Sharpener Mount	1
15	SC-022-79	Mach. Screw 6-32 x 3/8 Phil. Flat Hd. (SST)	2
16	00-914414	Spring - Truing Stone	1
17	00-914413	Stone - Truing	1
18	00-914495-00002	Arm - Truing	1
19	RR-006-22	Retaining Ring 1/4 In. (SST)	1
20	SC-129-65	Mach. Screw 2-56 x 5/8 Slotted Pan Hd	1
21	00-479527	Washer - Spring Crescent Shaped	1
22	SC-126-48	Mach. Screw 4-40 x 1/4 Phil. Pan Hd. (SST)	2
23	WL-003-03	Lockwasher #4 Helical	2
24	00-914544	Spring - Sharpener Housing	1
25	SC-122-87	Mach. Screw 8-32 x 1/4 Slotted Pan Hd. (SST)	1
26	00-873848	Shaft - Grinding Wheel	1
27	RR-006-22	Retaining Ring 1/4 In. (SST)	1
28	00-914415	Rod - Truing Pusher	1
29	00-914416	Spring - Truing Arm	1
30	00-914329	Roller - Shoulder Screw	1
31	00-914323	Actuator	1
32	00-914328	Roller - Lock Release	1
33	00-873851	Plunger - Bearing Assy. (Incls. Items 35 & 37)	1
34	00-438437	Spring - Return	1
35	00-873834	Bearing - Sharpener	1
36	00-875531	Spring - Main	1
37	00-873834	Bearing - Sharpener	1
38	00-914571	Sharpener Assy. (Incls. Items 1 thru 7, 13, & 16 thru 37)	1

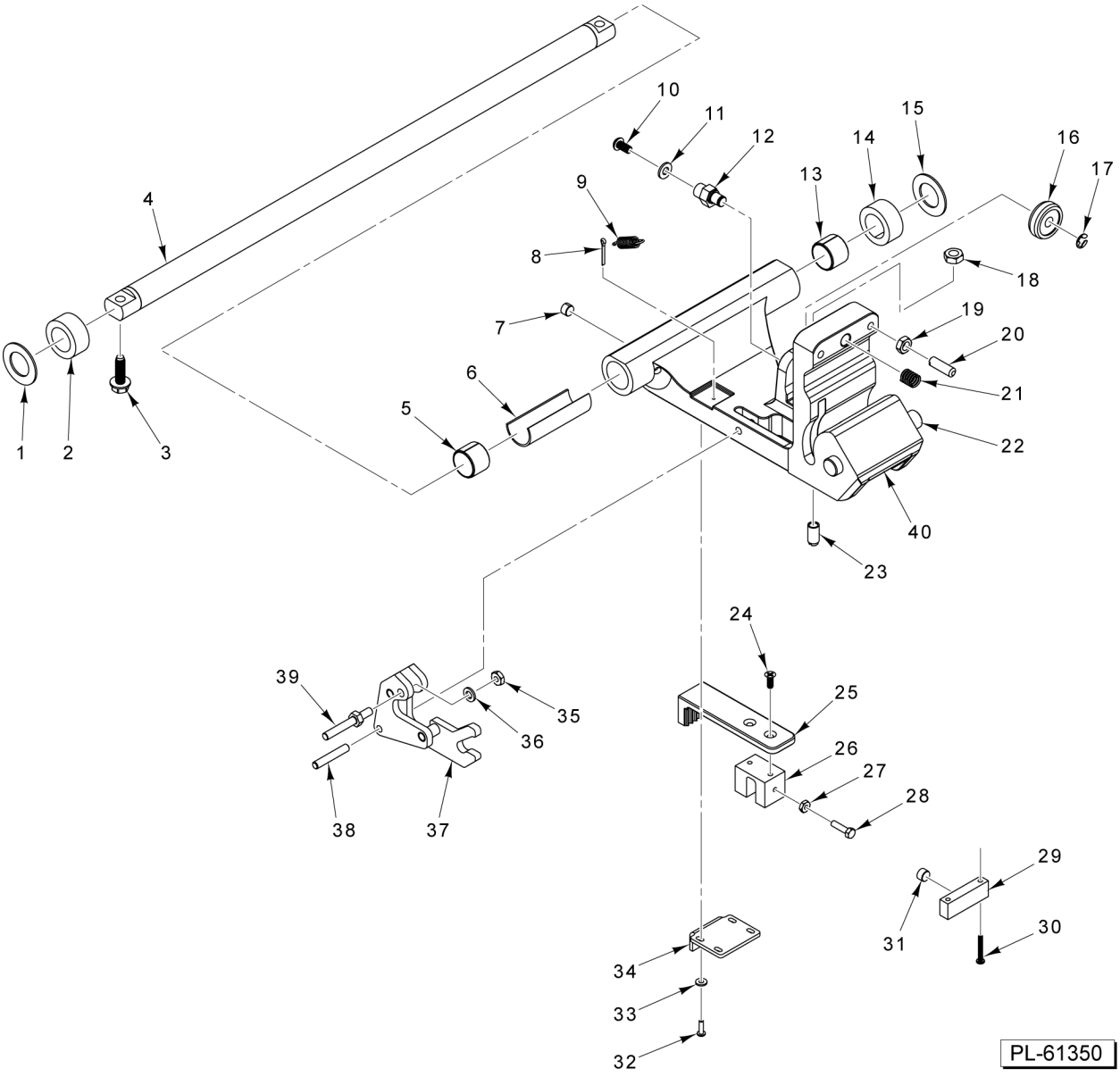

TRANSPORT CARRIAGE ASSEMBLY

TRANSPORT CARRIAGE ASSEMBLY

ILLUS. PL-61350	PART NO.	NAME OF PART	AMT.
1	00-435708	Washer - Backup (SST)	1
2	00-915255	Bumper - Slide Rod	1
3	SD-033-08	Self-Tapping Screw 5/16-18 x 1 Hex Washer Hd., Type TT	2
4	00-438907	Slide - Rod	1
5	00-875658	Bearing - Transport	1
6	00-439017	Wick - Slide Rod Lubrication	1
7	00-915319	Magnet	1
8	PC-005-11	Cotter Pin 3/32	1
9	00-915385	Spring - Extension Interlock	1
10	SC-131-70	Mach. Screw 1/4-28 x 1/2 Hex Button Hd. (SST)	1
11	WS-003-49	Washer 0.266 x 0.563 x 0.062 (SST)	1
12	00-915606	Stud - Roller Bearing	1
13	00-875658	Bearing - Transport	1
14	00-915255	Bumper - Slide Rod	1
15	00-435708	Washer - Backup (SST)	1
16	00-478420	Roller - Transport	1
17	RR-006-23	Retaining Ring	1
18	NS-017-20	Jam Nut 3/8-24 Hex	1
19	NS-018-06	Jam Nut 5/16-18 Hex (SST)	2
20	SC-128-35	Set Screw 5/16-18 x 1 Slotted Hdls., Flat Pt	2
21	00-519826	Insert - Screw	1
22	00-915260	Rod - Tray Arm Mounting	1
23	00-477747	Set Screw - Special	1
24	SC-131-64	Mach. Screw 10-24 x 1/2 Phil. Flat Hd	2
25	00-915416	Clip - Autodrive Clutch	1
26	00-915345	Block - Slider	1
27	NS-009-22	Nut 10-24 Hex	1
28	SC-110-31	Mach. Screw 10-24 x 3/4 Hex Hd	1
29	00-915321	Block - Magnet	1
30	SC-125-37	Mach. Screw 6-32 x 1 Phil. Pan Hd	2
31	00-915319	Magnet	1
32	SC-093-24	Mach. Screw 6-32 x 1/2 Phil. Pan Hd. (SST)	4
33	WS-023-01	Washer (SST)	4
34	00-915356	Bracket - Belt Grip	1
35	NS-018-01	Jam Nut 1/4-20 Hex (SST)	1
36	WL-006-17	Lockwasher 1/4 Helical (SST)	1
37	00-915312	Tray Interlock Assy	1
38	00-558091	Pin	1
39	00-915249	Pin - Cam Lock	1
40	00-915592-00002	Carriage - Transport (Incls. Items 5, 6, 7, 13, 21, & 22)	1

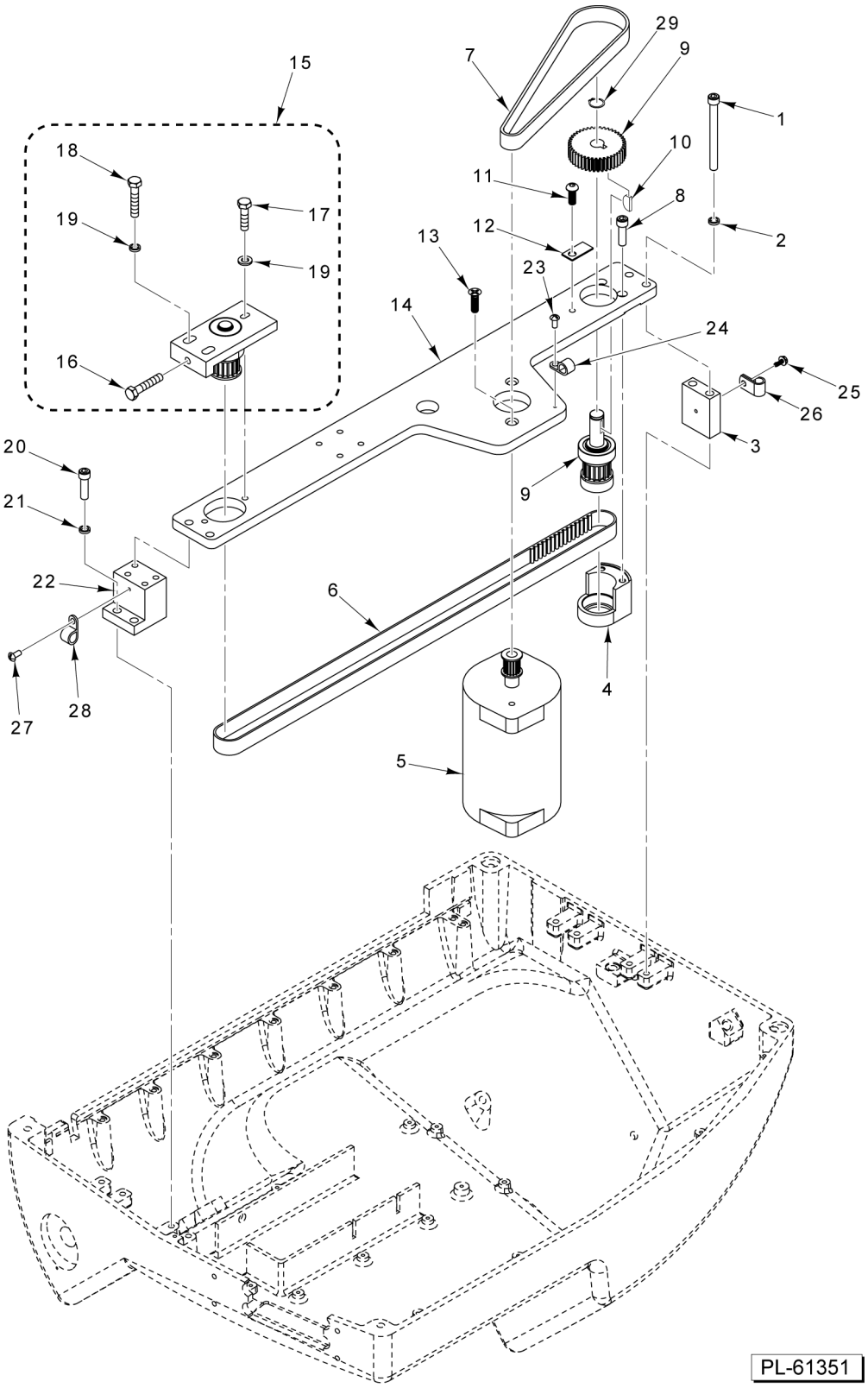

AUTO DRIVE ASSEMBLY

AUTO DRIVE ASSEMBLY

ILLUS. PL-61351	PART NO.	NAME OF PART	AMT.
1	SC-131-65	Cap Screw 1/4-20 x 2-3/4 Hex Socket Hd.	2
2	WL-003-35	Lockwasher 1/4 Helical	2
3	00-915336	Block - Auto Drive	1
4	00-915403	Housing - Auto Drive	1
5	00-937902	Kit - Motor Assy. (Auto Drive) (Incls. Pulley)	1
6	00-915371	Belt (Auto Drive)	1
7	00-915373	Belt (150T)	1
8	SC-118-65	Cap Screw M5 x 0.8 x 16mm Socket Fil. Hd	2
9	00-937840	Kit - Auto Trans. (Incls. Item 10 & 29)	1
10	KW-004-04	Key - Woodruff	1
11	01-402175-02866	Cap Screw Socket Button Hd	1
12	00-915404	Plate - Auto Drive	1
13	SC-131-66	Mach. Screw M6 x 1.0 x 20mm Phil. Flat Hd	2
14	00-915332	Plate - Auto Drive Support	1
15	00-937962	Tensioner Assy. (Incls. Items 16 thru 19)	1
16	SC-119-10	Cap Screw M6 x 1.0 x 30mm Hex Hd	1
17	SC-041-01	Cap Screw 1/4-20 x 3/4 Hex Hd. (SST)	1
18	SC-041-07	Cap Screw 1/4-20 x 1-1/2 Hex Hd. (SST)	2
19	WL-020-06	Lockwasher 1/4 Helical (SST)	3
20	SC-089-03	Cap Screw 1/4-20 x 7/8 Hex Socket Hd	2
21	WL-003-35	Lockwasher 1/4 Helical	2
22	00-915333	Block - Offset (Auto Drive)	1
23	SD-038-16	Self-Tapping Screw 6-32 x 3/8 Hex Washer Hd., Type RL	1
24	00-078752-00011	Clamp	1
25	SD-038-16	Self-Tapping Screw 6-32 x 3/8 Hex Washer Hd., Type RL	1
26	00-078752-00011	Clamp	1
27	SD-038-16	Self-Tapping Screw 6-32 x 3/8 Hex Washer Hd., Type RL	1
28	00-078752-00006	Clamp	1
29	00-402275-00591	Ring - Retaining	1

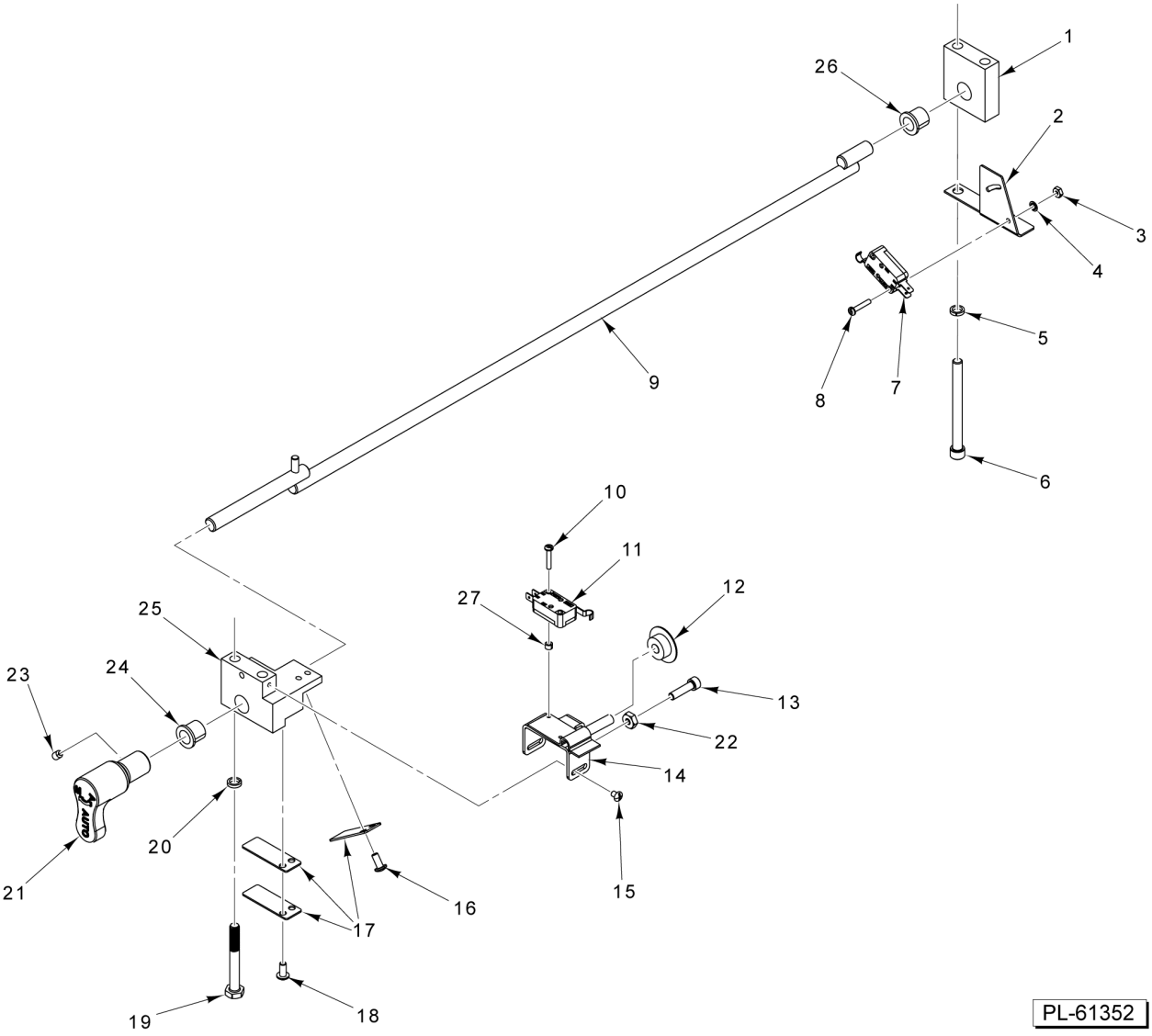

AUTO DRIVE LEVER

AUTO DRIVE LEVER

ILLUS. PL-61352	PART NO.	NAME OF PART	AMT.
1	00-915357	Block - Auto Drive Mounting	1
2	00-915325	Bracket - Auto Switch	1
3	NS-011-01	Nut 4-40 Hex (SST)	2
4	WL-019-99	Lockwasher #4 Internal	2
5	WL-003-35	Lockwasher 1/4 Helical	2
6	SC-131-65	Cap Screw 1/4-20 x 2-3/4 Hex Socket Hd	2
7	00-087711-00358	Switch - Miniature (Automatic/Manual) (5S)	1
8	SC-131-68	Mach. Screw 4-40 x 5/8 Slotted Fil. Hd. (SST)	2
9	00-915368	Rod Assy. - Auto-Engagement	1
10	SC-131-68	Mach. Screw 4-40 x 5/8 Slotted Fil. Hd. (SST)	2
11	00-087711-00358	Switch - Miniature (Gauge Plate Close to Stop) (2S)	1
12	00-915608	Actuator (Close to Stop)	1
13	SC-123-73	Mach. Screw 10-32 x 3/4 Hex Hd. (SST)	1
14	00-915621	Bracket Assy	1
15	SC-131-67	Mach. Screw 6-32 x 3/16 Slotted Pan Hd. (SST)	2
16	SC-120-35	Mach. Screw 8-32 x 3/8 Phil. Pan Hd. (SST)	2
17	00-915370	Spring - Flat (Auto)	3
18	SC-120-35	Mach. Screw 8-32 x 3/8 Phil. Pan Hd. (SST)	2
19	SC-124-56	Cap Screw 1/4-20 x 2 Hex Hd	2
20	WL-003-35	Lockwasher 1/4 Helical	2
21	00-915387	Knob - Auto-Engagement	1
22	NS-049-32	Nut 10-32 Hex	1
23	SC-131-88	Set Screw 8-32 x 3/8	1
24	00-915374	Bearing - Sleave (Flanged)	1
25	00-915364	Block - Mount (Auto-Engagement)	1
26	00-915374	Bearing - Sleave (Flanged)	1
27	00-478427	Spacer - Nylon	2

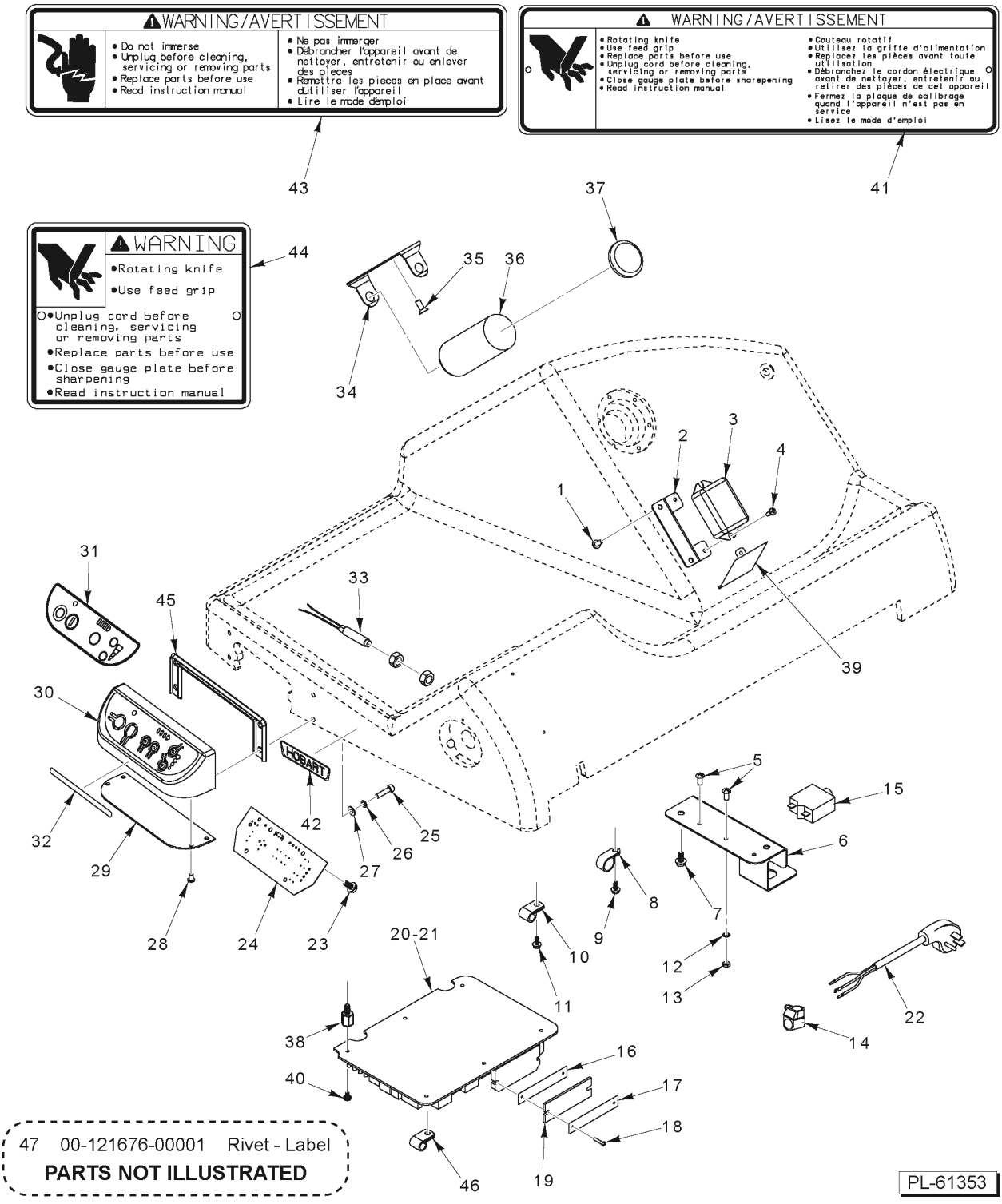

CONTROLS AND ELECTRICAL COMPONENTS

CONTROLS AND ELECTRICAL COMPONENTS

ILLUS. PL-61353	PART NO.	NAME OF PART	AMT.
1	SD-015-40	Self-Tapping Screw 8-32 x 3/8 Phil. Pan Hd., Type TT	2
2	00-915288	Bracket - Start Switch	1
3	00-271612-00002	Switch - Electronic Start (50/60 Hz.)	1
4	SD-015-38	Self-Tapping Screw 6-32 x 3/8 Phil. Pan Hd., Type TT	2
5	SC-027-29	Mach. Screw 8-32 x 3/8 Slotted Rd. Hd. (Brass)	2
6	00-915349	Bracket - Strain Relief	1
7	SD-039-68	Self-Tapping Screw 10-24 x 3/8 Hex Washer Hd., Type RL	2
8	00-438132-00002	Clamp - P (1/2)	1
9	SD-038-16	Self-Tapping Screw 6-32 x 3/8 Hex Washer Hd., Type RL	1
10	00-078752-00013	Clamp	1
11	SD-038-16	Self-Tapping Screw 6-32 x 3/8 Hex Washer Hd., Type RL	1
12	WL-010-01	Lockwasher #8 External Shakeproof	2
13	NS-010-11	Nut 8-32 Hex (Brass)	2
14	FE-021-21	Strain Relief	1
15	00-088196-016-2	Circuit Breaker	1
16	00-915517-00001	Bracket - Heatsink	1
17	00-915517-00002	Bracket - Heatsink	1
18	SC-131-68	Mach. Screw 4-40 x 5/8 Slotted Fil. Hd. (SST)	2
19	00-915353	Pad - Heatsink	1
20	00-938411-00001	PC Board - Control (120 V.) (Incls. Item 23)	1
21	00-914782-00009	Fuse (0.25 Amp)	2
22	00-938069	Cord & Plug Assy. (120 V.)	1
23	SD-037-75	Self-Tapping Screw 6-19 x 1/4 Phil. Pan Hd	4
24	00-938408	Board - Keypad	1
25	SC-040-90	Cap Screw 8-32 x 5/8 Hex Socket Hd	4
26	WL-003-14	Lockwasher #8 Helical	4
27	WS-023-22	Washer (SST)	4
28	SD-037-75	Self-Tapping Screw 6-19 x 1/4 Phil. Pan Hd	4
29	00-915354	Bottom - Bezel (Auto)	1
30	00-915334	Bezel Assy. (Auto) (Incls. Item 33)	1
31	00-915346	Overlay	1
32	00-916957-00050	Label (Do not lift by control)	1
33	00-087711-00357	Switch - Reed (Home Switch) (Incls. Nuts)	1
34	00-066621-00001	Bracket - Capacitor	1
35	SD-024-16	Self-Tapping Screw 10-24 x 1/2 Phil. Flat Hd., Type TT	1
36	00-070487-00026	Capacitor - Motor Start	1
37	00-070486-00001	End Cap - Capacitor	1
38	00-915383	Standoff	4
39	00-915581	Shield - Finger	1
40	SA-021-50	Screw Assy. 6-32 x 1/4 Phil. Pan Hd., Internal Lockwasher	4
41	00-916957-00017	Label - Warning	1
42	00-477740	Logo - Hobart (Small)	1
43	00-438131-045-1	Label - Warning (Canada)	1
44	00-438131-054-2	Label - Warning	1
45	00-915598	Gasket - Bezel (Auto)	1
46	00-078752-00003	Clamp - Cable	2
47	00-121676-00001	Rivet - Label	AR

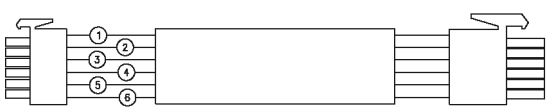

1. Harness - Wire (J2)

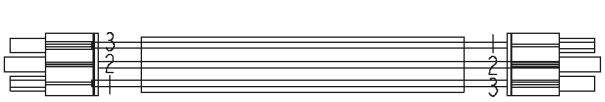

2. Cable (J12)

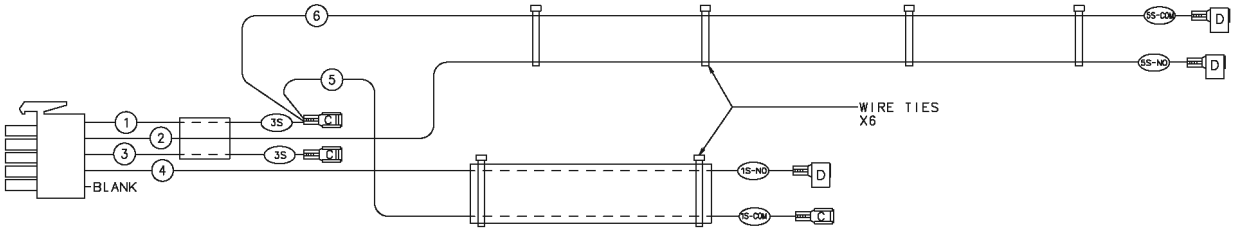

3. Harness - Wire (J4)

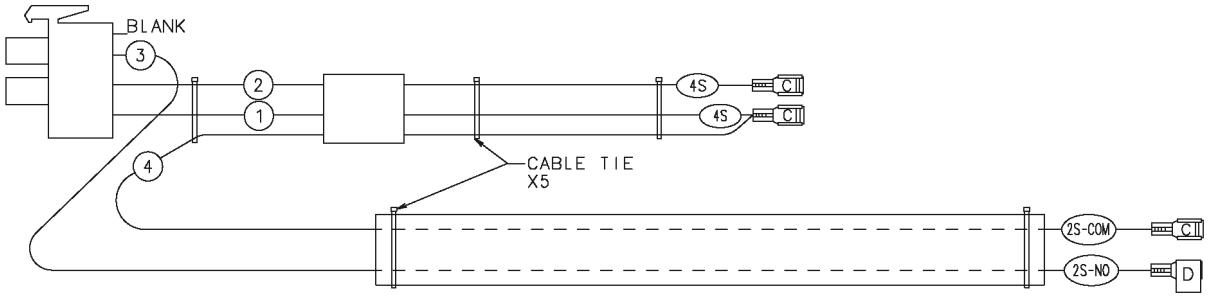

4. Harness - Wire (J5)

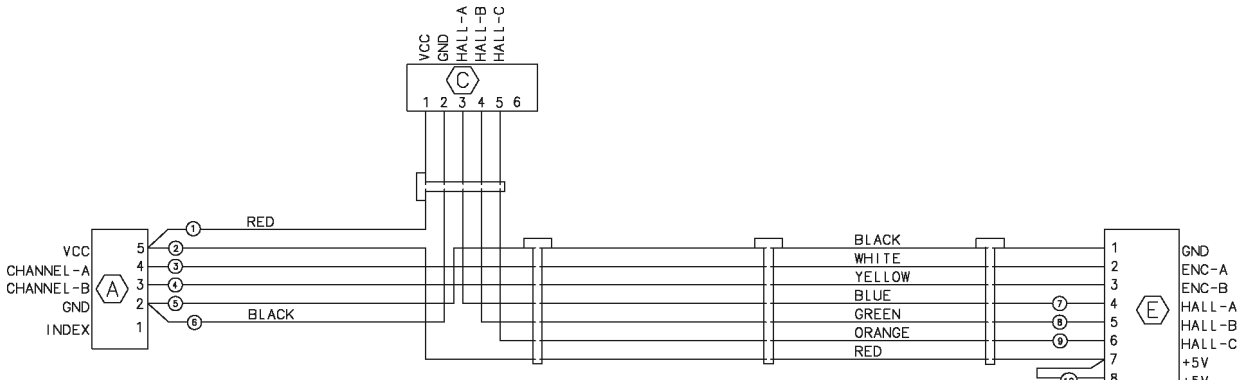

5-6 Harness - Wire (J9)

PL-61354

WIRE HARNESSES

WIRE HARNESSES

ILLUS. PL-61354	PART NO.	NAME OF PART	AMT.
1	00-915323	Harness - Wire (J2)	1
2	00-915320	Cable (J12)	1
3	00-915326	Harness - Wire (J4)	1
4	00-915327	Harness - Wire (J5)	1
*5	01-404175-00716	Harness - Wiring J9	1
**6	00-937901	Harness - Encoder PCB (J9)	1

* S/N: 311566625 and below
** S/N: 311566625 and above

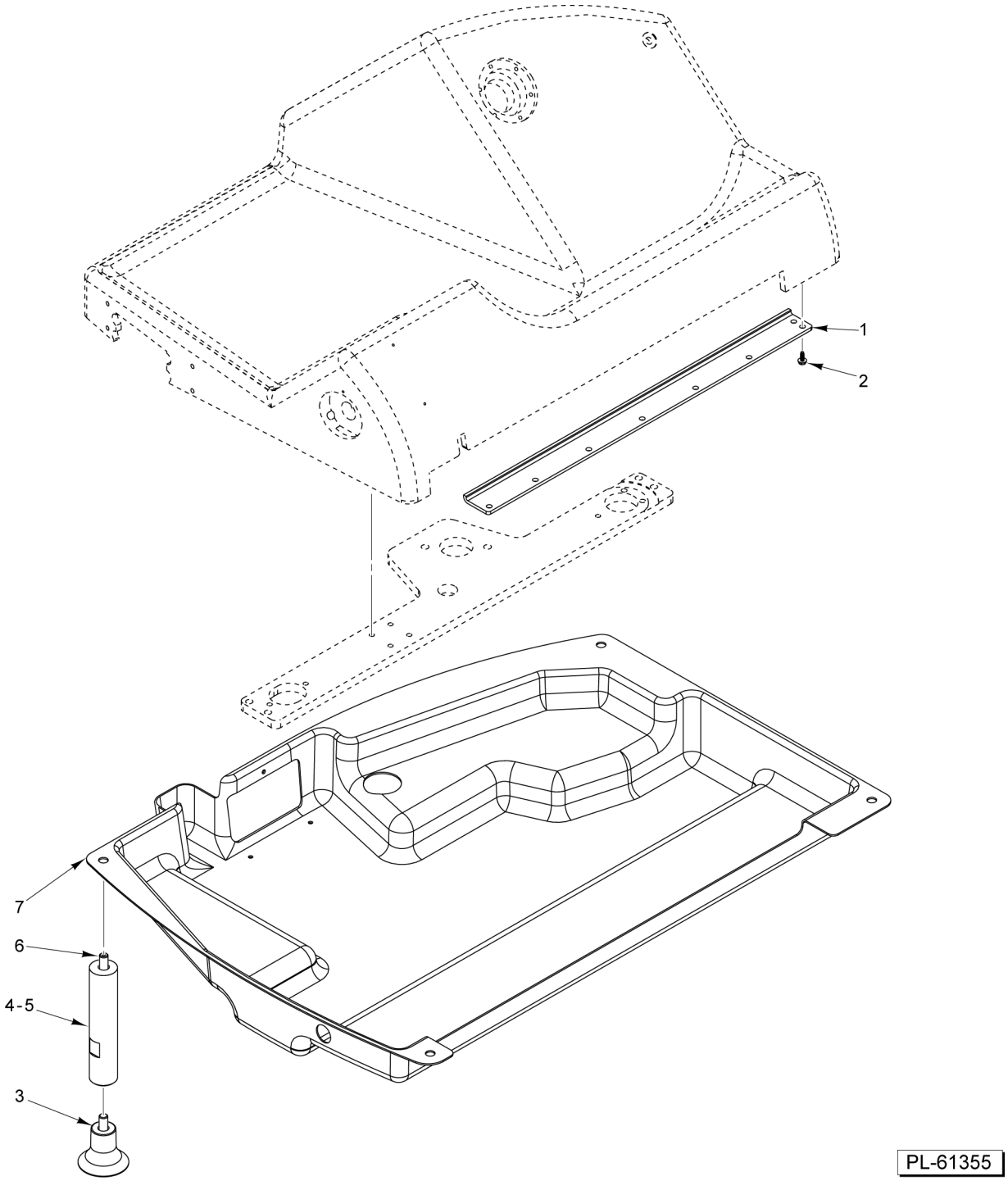

BASE AND BOTTOM COVER

BASE AND BOTTOM COVER

ILLUS. PL-61355	PART NO.	NAME OF PART	AMT.
1	00-915252	Bar - Transport Roller	1
2	SD-038-22	Self-Tapping Screw 10-24 x 1/2 Hex Washer Hd., Type RL	8
3	00-875371	Foot - Tall	1
4	00-938052	Extension - Leg	2
5	00-938285	Leg Assy. (Incls. Item 6)	2
6	SC-131-98	Screw - Leg Set	6
7	00-937894	Cover - Bottom	6

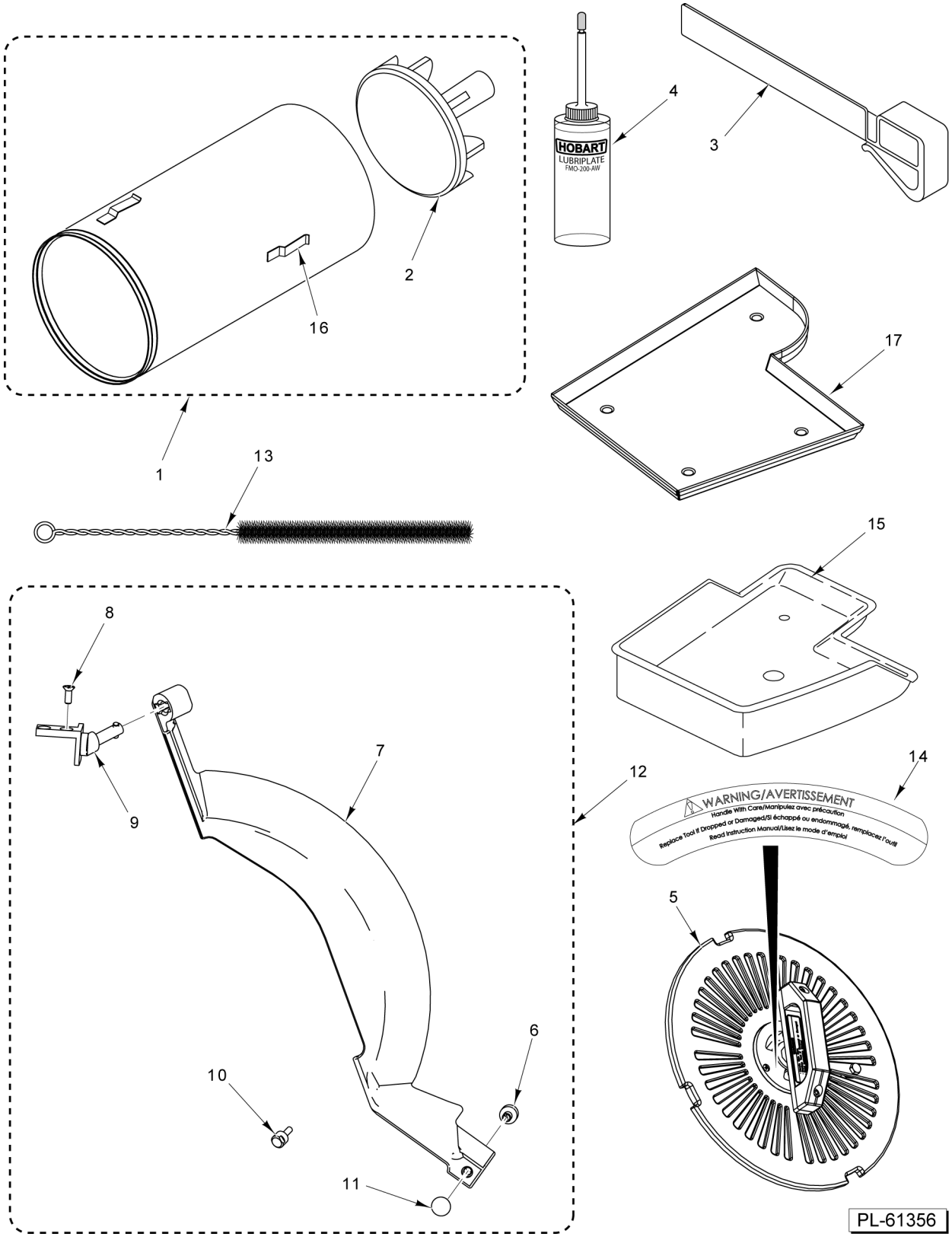

ACCESSORIES

ACCESSORIES

ILLUS. PL-61356	PART NO.	NAME OF PART	AMT.
1	00-915593	Food Chute Assy. (Packaged) (Incls. Item 2)	1
2	00-075945	Pusher Assy. - Plate	1
3	00-915266	Fence - Product	1
4	00-915207	Bottle - Oil (4 Oz.)	1
5	00-914758	Knife Removal Tool Assy. (Packaged) (Incls. Item 14)	1
6	00-914587	Foot - Adjustable Deflector	1
7	00-914585-00002	Deflector - Product	1
8	SC-022-79	Mach. Screw 6-32 x 3/8 Phil. Flat Hd. (SST)	2
9	00-914649	Mount - Product Deflector	1
10	00-914596	Stud - Product Deflector	1
11	00-914597	Cap - Product Deflector	1
12	00-914702	Product Deflector Kit (Incls. Items 6 thru 11)	1
13	00-915643	Brush - Tube	1
14	00-916957-00020	Label - Warning	1
15	00-873480	Box - Slaw	1
16	PB-005-38	Cap 0.062 x 0.500 (Vinyl)	1
17	00-937646	Tray - Slicer (SS)	1