INSTRUCTIONS



LX SERIES DISHWASHER

LX SERIES DISHWASHERS

MODELS

LX18	*ML-104349*
LX18C	*ML-104350*
LX18H	*ML-104351*
LX30	*ML-104352*
LX30C	*ML-104353*
LX30H	*ML-104354*
LX40C	*ML-104355*
LX40H	*ML-104356*

HOBART
CORPORATION

701 S. RIDGE AVENUE
TROY, OHIO 45374-0001

937 332-3000

www.hobartcorp.com

FORM 18615 Rev. I (July 2000)

TABLE OF CONTENTS

GENERAL 3

INSTALLATION 4
- Unpacking 4
- Trim Strip Accessory Kit 4
- Location 4
- Leveling 4
- Water Requirements 4
- Plumbing Connections 5
- Drain 5
- Water Supply 5
- Electrical Connection 6
- Detergent and Rinse Aid 8
- Chemical Sanitizer (Models LX18C, LX30C and LX40C Only) 8
- Installation Diagram (LX18, LX18C & LX18H) 9
- Installation Diagram (LX30, LX30C & LX30H) 10
- Installation Diagram (LX40C & LX40H) 11

OPERATION 12
- Before First Use 12
- Controls — Models LX18, LX18C, LX18H, LX30, LX30C, and LX30H 12
- Operating Models LX18, LX18C, LX18H, LX30, LX30C, and LX30H 13
  - Diagnostic Messages 14
- Models LX18, LX18C & LX18H 14
  - Modified Fill and Dump 14
  - Modified Fill and Dump — Wash/Rinse Cycle Times 14
  - True Fill and Dump 14
  - True Fill and Dump — Wash/Rinse Cycle Times 14
- Models LX30, LX30C, and LX30H — Wash/Rinse Cycle Times 15
- Controls — Models LX40H & LX40C 16
- Operating Models LX40H & LX40C 16
  - Ready Mode 17
  - Diagnostic Messages 18
  - Models LX40H & LX40C — Wash/Rinse Cycle Times 18
  - Operator Programming 18
  - Priming Chemical Pumps 18
  - Delime Cycle 18
  - Manager Programming 19
  - Programmable Variables and Recommended Settings — Models LX40H & LX40C . . . 20
- Preparation — All Models 20
- DOs and DON'Ts For Your New Hobart Warewasher 21
- Cleaning — All Models 22

MAINTENANCE 23
- Deliming — General 23
- Deliming — Models LX18, LX18C & LX18H 23
- Deliming — Models LX30, LX30C & LX30H 24
- Deliming — Models LX40H & LX40C 25
- Lubrication 25

TROUBLESHOOTING 26

© HOBART CORPORATION, 1993

Installation, Operation, and Care of LX SERIES DISHWASHERS

SAVE THESE INSTRUCTIONS

GENERAL

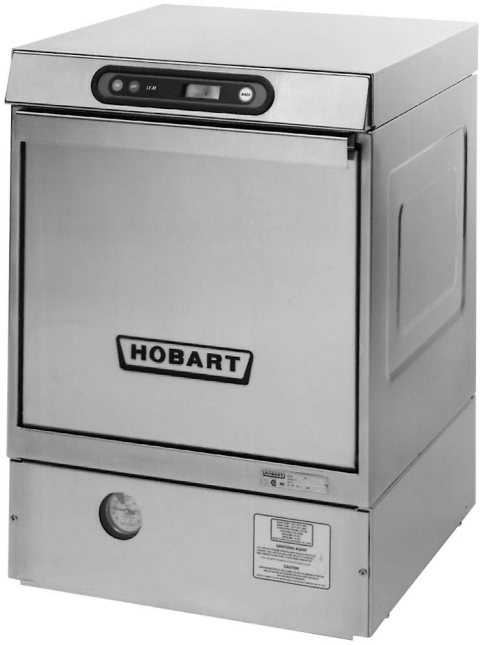

Model LX30 Dishwasher

The LX Series dishwashers are fully automatic, front-loading dishwashing machines which are equipped with a 3/4 horsepower electric motor.

All LX Series dishwashers shut down automatically four hours after last use to conserve energy.

Standard equipment includes two 20" x 20" racks, electronic controls, pumped drain, fill hose and drain hose.

MODEL	DESCRIPTION
LX18H	Washes with water from previous rinse cycle, drains, and fills again with fresh water for the rinse cycle. Rinse is retained for the next wash cycle. The LX18H has a built-in booster heater.
LX18, LX18C	Fill and drain cycle: fills, washes, drains, fills, rinses, and drains again to end the cycle. • LX18 requires 180°F incoming water temperature. • LX18C is a low-temperature, chemical sanitizing machine for use with 5.25% or 8.40% sodium hypochlorite solution (bleach) as the sanitizing agent.
LX30	Fresh water rinse; requires 180°F incoming water temperature.
LX30H, LX40H	Fresh water rinse with a built-in booster heater. Normally the machine requires 140°F incoming water and is heated in the booster to 180°F; however, in the LX40H, a 70°F rise in temperature is available by using the standard heavy cycle. This allows an incoming water temperature of 110°F. In the LX30H, a 70°F rise is also possible; contact your local Hobart Service Office.
LX30C, LX40C	Fresh water rinse; low temperature, chemical sanitizing models for use with 5.25% or 8.40% sodium hypochlorite solution (bleach) as the sanitizing agent. LX30C equipped with electric booster water heater has 100°F minimum water supply heated to 140°F with bleach as the sanitizing agent.

Water usage for the LX18 models is 2.6 gallons per rack (5.2 gallons per rack if the sump water temperature cools between cycles); water usage for the LX30 and the LX40 models is 1.2 gallons per rack. The machine uses 2.2 gallons per rack for the extended rinse cycle (available on LX40 models in the heavy wash cycle only).

INSTALLATION

UNPACKING

Immediately after unpacking the dishwasher, check for possible shipping damage. If this machine is found to be damaged, save packaging material and contact the carrier within 15 days of delivery.

Prior to installation, verify that the electrical supply agrees with the specifications on the machine data plate.

TRIM STRIP ACCESSORY KIT (Optional)

If you ordered the trim strip accessory kit, it must be installed prior to positioning the dishwasher.

To install the trim strip, remove the protective paper from the pressure-sensitive adhesive strip. Carefully align trim strip with front edge and both sides of top cover and secure in place by firmly pressing trim strip down against top cover.

LOCATION

Steam generated from normal operation may escape from the door. Wood, laminates, veneers, etc. are unsuitable materials for use in areas exposed to dishwasher steam and detergents. Stainless steel or other moisture resistant shields are recommended for surfaces adjacent to LX sides and top.

LEVELING

The machine must be level to operate properly. Place the dishwasher in its operating location. Level the machine before any connections are made. Using a carpenter's level placed diagonally on the rack tracks, level the machine front-to-back and side-to-side by threading the adjustable feet in or out. After leveling the machine, cover the exposed threads of the adjustable feet with black rubber tubing supplied (see separate instructions furnished with machine).

WATER REQUIREMENTS

Proper water quality can improve ware washing performance by reducing spotting, lowering chemical supply costs, enhancing effectiveness of labor, and extending equipment life. Local water conditions vary from one location to another. The recommended proper water treatment for effective and efficient use of this equipment will also vary depending on the local water conditions. Ask your municipal water supplier for details about local water specifics prior to installation.

Recommended water hardness is 4 – 6 grains of hardness per gallon. Chlorides must not exceed 50 parts per million. Water hardness above 6 grains per gallon should be treated by a water conditioner (water softener or in-line treatment). Water hardness below 4 grains per gallon also requires water treatment to reduce potential corrosion. Water treatment has been shown to reduce costs associated with machine cleaning, reduce deliming of the dishwasher, reduce detergent usage, and reduce corrosion of metallic surfaces in the booster water heater and dishwasher.

Sediment, silica, chlorides, or other dissolved solids may lead to a recommendation for particulate filtration or reverse osmosis treatment.

If an inspection of the dishwasher or booster heater reveals lime build-up after the equipment has been in service, in-line treatment should be considered, and, if recommended, should be installed and used as directed. Contact your local Hobart Service Office for specific recommendations.

PLUMBING CONNECTIONS

WARNING: PLUMBING CONNECTIONS MUST COMPLY WITH APPLICABLE SANITARY, SAFETY, AND PLUMBING CODES.

Drain

A drain hose is provided with a 3/4" pipe connection adapter. This should be securely plumbed into the sink drain. Use care not to kink hose. See installation diagrams in this manual. Drain must have a minimum flow capacity of 10 gallons per minute.

Water Supply

A water hammer arrestor (meeting ASSE-1010 Standard or equivalent) should be installed (supplied by others) in the common water supply line at the service connection.

Water must be proper hardness. Recommended hardness range is 4 – 6 grains per gallon. Lower hardness can promote corrosion, higher hardness may cause excessive formation of lime scale.

The plumber who connects this machine is responsible for making certain that water lines are THOROUGHLY FLUSHED OUT BEFORE connecting to the dishwasher. This "flush-out" is necessary to remove all foreign matter, such as chips (resulting from cutting or threading of pipes), pipe joint compound from the lines, or, if soldered fittings are used, bits of solder or cuttings from the tubing. Debris, if not removed, may lodge in the dishwasher's plumbing components and render them inoperative. Manual valves or solenoid valves fouled by foreign matter, and any expenses resulting from this fouling, are NOT the responsibility of the manufacturer.

Water supply requirements are as follows:

MODEL	TEMPERATURE	FLOWING PRESSURE
LX18, LX30	180°F Minimum	15 to 25 psig
LX18H, LX30H, LX40H	140°F Minimum	15 to 25 psig
LX18C, LX30C, LX40C	140°F Minimum	15 to 25 psig
LX30C w/booster	100°F Minimum	15 to 25 psig

If flowing pressure exceeds 25 psig, a pressure reducing valve (not supplied) must be installed in the supply line. **CAUTION: The water pressure regulator must have a relief by-pass. Failure to use the proper type of pressure regulator may result in damage to the unit.** If flowing pressure is less than 15 psig, improper machine operation may result.

A manual shutoff valve (not supplied) should be installed upstream of the fill hose to accommodate servicing the machine.

It is recommended that a line strainer (not supplied) be installed in the supply line between the manual shutoff valve (not supplied) and the connection point on the machine. Make plumbing connections with 1/2" minimum copper piping OD (3/4" recommended), with a 3/4" male garden hose fitting (not supplied). See installation diagrams, pages 9-11.

NOTE: Iron in the water supply can cause staining. An iron filter is recommended for iron concentration greater than 0.1 part per million. High chloride levels in the water supply can cause pitting. A chloride removal system is required if levels exceed 50 parts per million.

ELECTRICAL CONNECTION

WARNING: ELECTRICAL AND GROUNDING CONNECTIONS MUST COMPLY WITH THE APPLICABLE PORTIONS OF THE NATIONAL ELECTRICAL CODE AND/OR OTHER LOCAL ELECTRICAL CODES.

WARNING: DISCONNECT ELECTRICAL POWER SUPPLY AND PLACE A TAG AT THE DISCONNECT SWITCH TO INDICATE THAT YOU ARE WORKING ON THE CIRCUIT.

ELECTRICAL DATA ◊

Model	Volts / Hertz / Phase	Minimum Circuit Ampacity Maximum Protective Device AMPS	90° C Stranded Copper Wire Size
LX18 LX18C	120 / 60 / 1	20	12
	208 / 60 / 1	15	14
	240 / 60 / 1		
LX18H (with booster)	208 / 60 / 1	50	8
	120 / 208 (3W) / 60 / 1 *		
	240 / 60 / 1		
	120 / 240 (3W) / 60 / 1 *		
	208 / 60 / 3	30	8
	240 / 60 / 3		
	380 - 400 / 60 / 3	20	12
	480 / 60 / 3	15	14
LX30 LX30C LX40C	120 / 60 / 1	20	12
	208 / 60 / 1		
	120 / 208 (3W) / 60 / 1 *		
	240 / 60 / 1		
	120 / 240 (3W) / 60 / 1 *		
LX30C (with booster)	120 / 208 (3W) / 60 / 1 *	50	8
	120 / 240 (3W) / 60 / 1 *		
LX30H (with booster) LX40H (with booster)	208 / 60 / 1	50	8
	120 / 208 (3W) / 60 / 1 *		
	240 / 60 / 1		
	120 / 240 (3W) / 60 / 1 *		
	208 / 60 / 3	40	8
	240 / 60 / 3	35	8
	380 - 400 / 60 / 3 480 / 60 / 3	20	12

* The (3W) systems require three power wires which include a current carrying neutral. An additional fourth wire must be provided for machine ground.

◊ Compiled in accordance with the National Electrical Code, NFPA-70, latest edition.

Refer to the data plate on the front of the machine and the label inside the control drawer at the power connection for proper selection.

Use stranded copper wire only.

1. Remove the cover plate at the upper right in the back of the machine (Fig. 1). A hole for 1" trade size conduit is supplied in the cover plate.

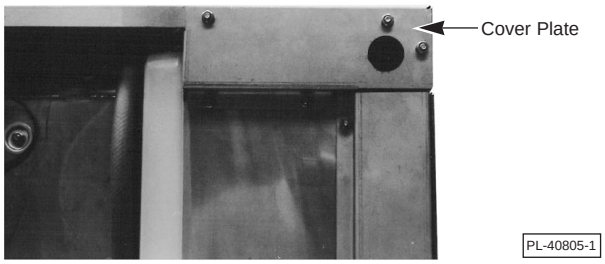

Fig. 1

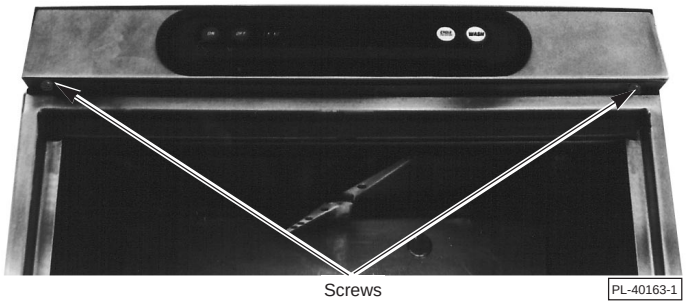

Fig. 2

2. Open dishwasher door and remove the 2 screws (Fig. 2) securing the controls drawer. Close the dishwasher door and open the controls drawer fully.

3. Install 1" trade conduit and fitting to the cover plate. A 90° fitting is recommended.

4. Feed wires over top of tank to strain relief(s) at rear of drawer. At least 32" and not more than 36" of the required wire size must extend from the end of the conduit fitting.

5. Reinstall the cover plate (3 screws, Fig. 1).

6. For 8 AWG wire, run no more than 2 wires through any strain relief (two strain reliefs are provided). Make electrical connections per the wiring diagram supplied with the machine, and secure wires to power terminal block and ground.

   For 12 or 14 AWG wire, run 3 wires (or 4 wires if required) through the strain relief provided by Hobart. Make electrical connections per the wiring diagram supplied with the machine. Secure wires to the power terminal block and ground. Keep excess wire in the drawer to a minimum.

7. Tighten the set screw on the strain relief(s) until they bottom out (on the shoulder of the body).

8. Close the control drawer and replace the screws.

DETERGENT AND RINSE AID

If manually adding detergent in an LX18, LX18C, or LX18H at the beginning of each cycle, the machine must be programmed to the “True Fill and Dump” mode. This will ensure detergent is not dumped before filling with fresh, hot water. Contact your local Hobart Service Office to arrange for conversion.

Use only commercial grade detergents recommended by your chemical professional. Do not use detergents formulated for residential dishwashers.

On LX18 and LX30 models only, the detergent and rinse aid pump "ON" times are factory set. If adjustments are required, contact your local Hobart Service Office.

Place the detergent and rinse aid containers (which are obtained from an independent supplier) in a location where the delivery tubes will reach them.

Remove the detergent bottle cap and put the *red* delivery tube in the detergent container.

Remove the rinse aid bottle cap and place the *blue* delivery tube in the rinse aid container.

Be sure to push the delivery tube standpipes completely to the bottom of each container. Check to make sure there are no obstructions or kinks in the delivery tubes.

CHEMICAL SANITIZER (Models LX18C, LX30C, and LX40C Only)

CAUTION: Items such as pewter, aluminum, and silver will be attacked by sodium hypochlorite (bleach). Therefore, chemical sanitizing dishwashers should not be used to wash such items.

On models LX18C and LX30C only, the chemical sanitizer pump is factory set for use with 5.25% sodium hypochlorite solution. If 8.40% sodium hypochlorite solution is to be used, contact your local Hobart Service Office.

Place a one-gallon bottle of 5.25% or 8.40% sodium hypochlorite solution (bleach) in a suitable location no higher than 10 inches off the floor. Do not premix sanitizing solution with water or any other liquid.

WARNING: NEVER PREMIX A WETTING AGENT WITH THE SANITIZING SOLUTION. MIXING MAY CAUSE HAZARDOUS GAS TO FORM.

Remove the sanitizer bottle cap and place the *white* delivery tube in the sanitizer container. Be sure to push the delivery tube standpipe completely to the bottom of the container. Check to make sure there are no obstructions or kinks in the delivery tube.

Models LX18C and LX30C must be operated through four complete cycles (without dishes) to initially charge the sanitizer delivery system. On model LX40C, run the prime cycle (see Operator Programming, page 18).

Frequently check the clear portion of your chemical feed standpipe (at your sanitizer bottle) to make sure there is a sufficient chemical supply.

WARNING:

REQUIRED FLOWING WATER PRESSURE TO THE DISHMACHINE IS 20 ± 5 PSIG. IF PRESSURES HIGHER THAN 25 PSIG ARE PRESENT, A PRESSURE REGULATING VALVE MUST BE INSTALLED IN THE WATER LINE TO THE DISHMACHINE (BY OTHERS).

IMPORTANT: THE SODIUM HYPOCHLORITE (LIQUID BLEACH) CONTAINER SHOULD BE PLACED NO HIGHER THAN 10" ABOVE FLOOR.

IF BLEACH CONTAINER IS TO BE PLACED IN CABINET ADJACENT TO MACHINE, A 1/2" DIA HOLE IS REQUIRED IN THE CABINET TO RUN BLEACH SUPPLY LINE.

USE ONLY 5.2% OR 8.4% SODIUM HYPOCHLORITE (LIQUID BLEACH) AS SANITIZING CHEMICAL TO INSURE PROPER OPERATION OF DISHMACHINE.

DO NOT PRE-MIX WETTING AGENT AND SODIUM HYPOCHLORITE (LIQUID BLEACH).

CERTAIN MATERIALS INCLUDING SILVER PLATE, ALUMINUM AND PEWTER ARE ATTACKED BY SODIUM HYPOCHLORITE (LIQUID BLEACH). SEE INSTRUCTION MANUAL.

NOTES:

1. ALL VERTICAL MACHINE DIMENSIONS TAKEN FROM FLOOR MAY BE INCREASED BY 1".
2. MOIST AIR ESCAPES FROM THE DOOR. USE ONLY MOISTURE RESISTANT MATERIALS ADJACENT TO LX SIDES AND TOP.

PLUMBING NOTES:

1. WATER HAMMER ARRESTOR (MEETING ASSE-1010 STANDARD OR EQUIVALENT) TO BE SUPPLIED (BY OTHERS) IN COMMON WATER SUPPLY LINE AT SERVICE CONNECTION.
2. RECOMMENDED WATER HARDNESS TO BE 4-6 GRAINS FOR BEST RESULTS.
3. MINIMUM WATER CONDUCTIVITY REQUIRED - 30 MICRO-MHOS/CM.
4. IF DRAIN HOSE IS LOOPED ABOVE A SINK, THE LOOP MUST NOT EXCEED 38" AFF.

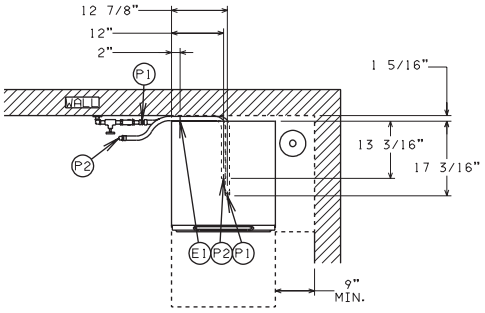

CONNECTION INFORMATION
(*AFF - ABOVE FINISHED FLOOR)

LEGEND

E1 ELECTRICAL CONNECTION:1-3/8" DIA. HOLE FOR 1" TRADE SIZE CONDUIT: 31-3/4" AFF.

P1 SINGLE FILL AND RINSE CONNECTION: 3/4" FEMALE GARDEN HOSE FITTING ON 6' LONG HOSE SUPPLIED WITH MACHINE.: 180°F WATER MIN. FOR LX-18.(140°F MIN. LX-18C & LX-18H): 1-1/2" AFF.

P2 DRAIN CONNECTION: 3/4" MPT FITTING WITH 6' LONG HOSE SUPPLIED WITH MACHINE: 5-9/16" AFF.

WARNING

ELECTRICAL AND GROUNDING CONNECTIONS MUST COMPLY WITH THE APPLICABLE PORTIONS OF THE NATIONAL ELECTRICAL CODE AND/OR OTHER LOCAL ELECTRICAL CODES.

PLUMBING CONNECTIONS MUST COMPLY WITH APPLICABLE SANITARY, SAFETY AND PLUMBING CODES. DRAIN AND FILL LINE CONFIGURATIONS VARY.SOME METHODS ARE SHOWN ON THIS DRAWING.

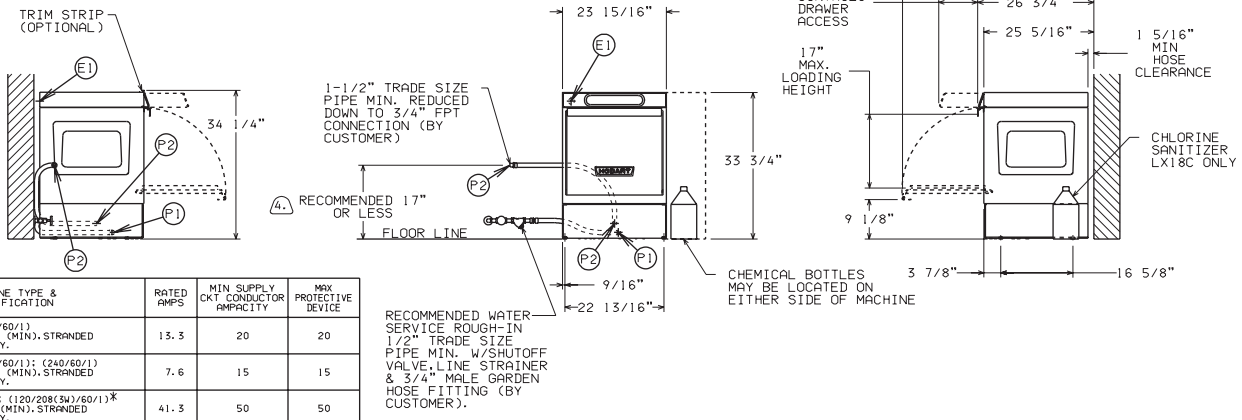

MACHINE TYPE & SPECIFICATION	RATED AMPS	MIN SUPPLY CKT CONDUCTOR AMPACITY	MAX PROTECTIVE DEVICE
LX18, LX18C (120/60/1) USE 90°C 12 AWG (MIN).STRANDED COPPER WIRE ONLY.	13.3	20	20
LX18, LX18C (208/60/1); (240/60/1) USE 90°C 14 AWG (MIN).STRANDED COPPER WIRE ONLY.	7.6	15	15
LX18H (208/60/1); (120/208(3W)/60/1)* USE 90°C 8 AWG (MIN).STRANDED COPPER WIRE ONLY.	41.3	50	50
LX18H (240/60/1); (120/240(3W)/60/1)* USE 90°C 8 AWG (MIN).STRANDED COPPER WIRE ONLY.	36.8	50	50
LX18H (208/60/3) USE 90°C 8 AWG (MIN). STRANDED COPPER WIRE ONLY.	23.9	30	30
LX18H (240/60/3) USE 90°C 8 AWG (MIN).STRANDED COPPER WIRE ONLY.	21.3	30	30
LX18H (480/60/3) USE 90°C 14 AWG (MIN).STRANDED COPPER WIRE ONLY.	10.7	15	15
LX18H (380-400/60/3) USE 90°C 12 AWG (MIN).STRANDED COPPER WIRE ONLY.	12.8-13.3	20	20

* THIS SYSTEM REQUIRES THREE POWER WIRES WHICH INCLUDES A CURRENT CARRYING NEUTRAL. AN ADDITIONAL FOURTH WIRE MUST BE PROVIDED FOR MACHINE GROUND.

OPTIONAL CORD KIT AVAILABLE FROM HOBART (LX18H ONLY).

MODELS:LX18, LX18C,LX18H
D-329300
REV. J

SHIPPING WEIGHTS	LX18	LX18C	LX18H
NET WEIGHT OF MACHINE	190 LBS	190 LBS	210 LBS
DOMESTIC SHIPPING WEIGHT	235 LBS	235 LBS	255 LBS

INSTALLATION DIAGRAM (LX18, LX18C & LX18H) — 329300

WARNING:

REQUIRED FLOWING WATER PRESSURE TO THE DISHMACHINE IS 20 ± 5 PSIG. IF PRESSURES HIGHER THAN 25 PSIG ARE PRESENT, A PRESSURE REGULATING VALVE MUST BE INSTALLED IN THE WATER LINE TO THE DISHMACHINE (BY OTHERS).

IMPORTANT: THE SODIUM HYPOCHLORITE (LIQUID BLEACH) CONTAINER SHOULD BE PLACED NO HIGHER THAN 10" ABOVE FLOOR.

IF BLEACH CONTAINER IS TO BE PLACED IN CABINET ADJACENT TO MACHINE, A 1/2" DIA HOLE IS REQUIRED IN THE CABINET TO RUN BLEACH SUPPLY LINE.

USE ONLY 5.2% OR 8.4% SODIUM HYPOCHLORITE (LIQUID BLEACH) AS SANITIZING CHEMICAL TO INSURE PROPER OPERATION OF DISHMACHINE.

DO NOT PRE-MIX WETTING AGENT AND SODIUM HYPOCHLORITE (LIQUID BLEACH).

CERTAIN MATERIALS INCLUDING SILVER PLATE, ALUMINUM AND PEWTER ARE ATTACKED BY SODIUM HYPOCHLORITE (LIQUID BLEACH). SEE INSTRUCTIONAL MANUAL.

NOTES:

1. ALL VERTICAL MACHINE DIMENSIONS TAKEN FROM FLOOR MAY BE INCREASED BY 1".
2. MOIST AIR ESCAPES FROM THE DOOR. USE ONLY MOISTURE RESISTANT MATERIALS ADJACENT TO LX SIDES AND TOP.

PLUMBING NOTES:

1. WATER HAMMER ARRESTOR (MEETING ASSE-1010 STANDARD OR EQUIVALENT) TO BE SUPPLIED (BY OTHERS) IN COMMON WATER SUPPLY LINE AT SERVICE CONNECTION.
2. RECOMMENDED WATER HARDNESS TO BE 4-6 GRAINS FOR BEST RESULTS.
3. MINIMUM WATER CONDUCTIVITY REQUIRED - 30 MICRO-MHOS/CM.
4. IF DRAIN HOSE IS LOOPED ABOVE A SINK, THE LOOP MUST NOT EXCEED 38" AFF.

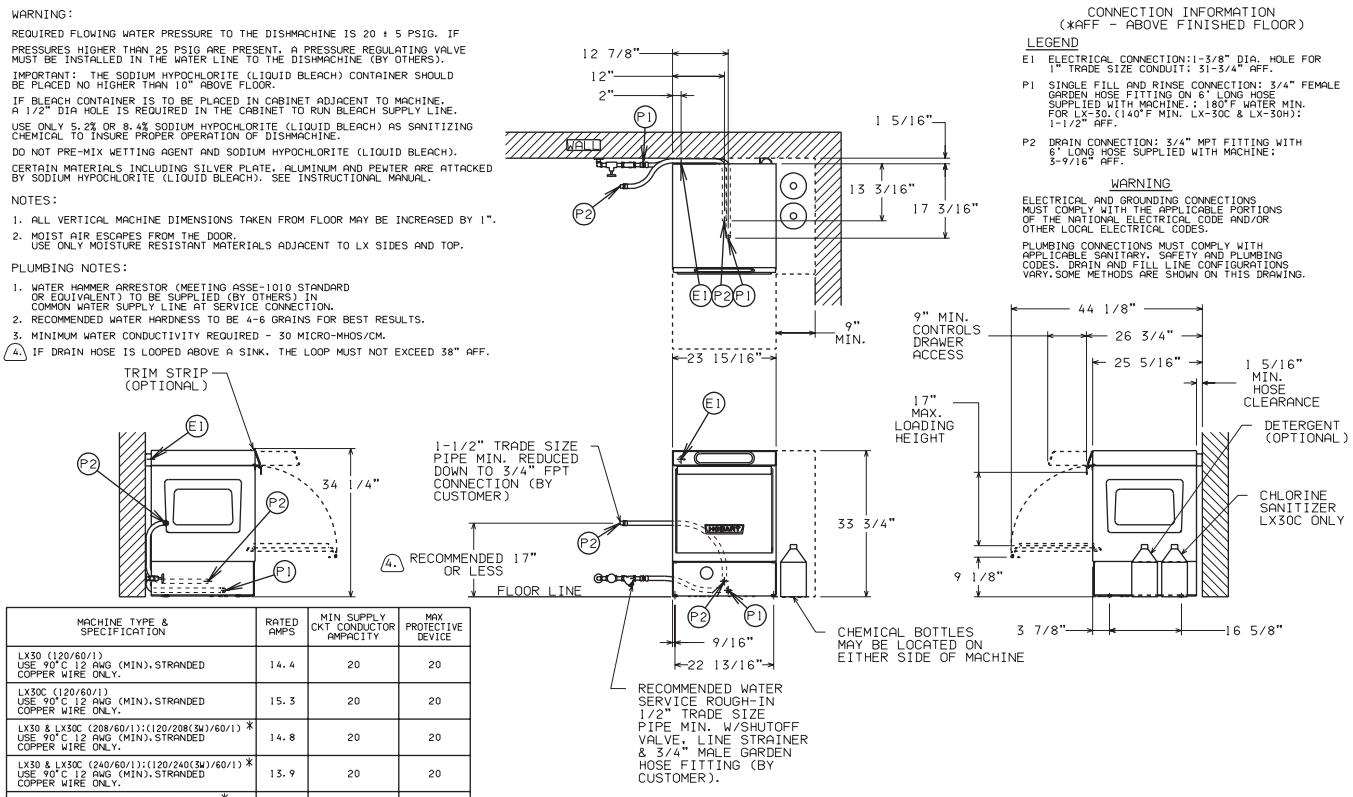

CONNECTION INFORMATION
(*AFF - ABOVE FINISHED FLOOR)

LEGEND

E1 ELECTRICAL CONNECTION: 1-3/8" DIA. HOLE FOR 1" TRADE SIZE CONDUIT; 51-3/4" AFF.

P1 SINGLE FILL AND RINSE CONNECTION: 3/4" FEMALE GARDEN HOSE FITTING ON 6' LONG HOSE SUPPLIED WITH MACHINE.; 180°F WATER MIN. FOR LX-30, (140°F MIN. LX-30C & LX-30H): 1-1/2" AFF.

P2 DRAIN CONNECTION: 3/4" MPT FITTING WITH 6' LONG HOSE SUPPLIED WITH MACHINE; 3-9/16" AFF.

WARNING

ELECTRICAL AND GROUNDING CONNECTIONS MUST COMPLY WITH THE APPLICABLE PORTIONS OF THE NATIONAL ELECTRICAL CODE AND/OR OTHER LOCAL ELECTRICAL CODES.

PLUMBING CONNECTIONS MUST COMPLY WITH APPLICABLE SANITARY, SAFETY AND PLUMBING CODES. DRAIN AND FILL LINE CONFIGURATIONS VARY. SOME METHODS ARE SHOWN ON THIS DRAWING.

MACHINE TYPE & SPECIFICATION	RATED AMPS	MIN SUPPLY CKT CONDUCTOR AMPACITY	MAX PROTECTIVE DEVICE
LX30 (120/60/1) USE 90°C 12 AWG (MIN), STRANDED COPPER WIRE ONLY.	14.4	20	20
LX30C (120/60/1) USE 90°C 12 AWG (MIN), STRANDED COPPER WIRE ONLY.	15.3	20	20
LX30 & LX30C (208/60/1);(120/208(3W)/60/1) * USE 90°C 12 AWG (MIN), STRANDED COPPER WIRE ONLY.	14.8	20	20
LX30 & LX30C (240/60/1);(120/240(3W)/60/1) * USE 90°C 12 AWG (MIN), STRANDED COPPER WIRE ONLY.	13.9	20	20
LX30C/BSTR (120/208(3W)/60/1) * USE 90°C 8 AWG (MIN), STRANDED COPPER WIRE ONLY.	43.6	50	50
LX30C/BSTR (120/240(3W)/60/1) * USE 90°C 8 AWG (MIN), STRANDED COPPER WIRE ONLY.	38.9	50	50
LX30H (208/60/1);(120/208(3W)/60/1) * USE 90°C 8 AWG (MIN), STRANDED COPPER WIRE ONLY.	43.6	50	50
LX30H (240/60/1);(120/240(3W)/60/1) * USE 90°C 8 AWG (MIN), STRANDED COPPER WIRE ONLY.	38.9	50	50
LX30H (208/60/3) USE 90°C 8 AWG (MIN), STRANDED COPPER WIRE ONLY.	31.2	40	40
LX30H (240/60/3) USE 90°C 8 AWG (MIN), STRANDED COPPER WIRE ONLY.	27.6	35	35
LX30H (480/60/3) USE 90°C 12 AWG (MIN), STRANDED COPPER WIRE ONLY.	13.8	20	20
LX30H (380-400/60/3) USE 90°C 12 AWG (MIN), STRANDED COPPER WIRE ONLY.	15.4-16.0	20	20

* THIS SYSTEM REQUIRES THREE POWER WIRES WHICH INCLUDES A CURRENT CARRYING NEUTRAL, AN ADDITIONAL FOURTH WIRE MUST BE PROVIDED FOR MACHINE GROUND.

OPTIONAL CORD KIT AVAILABLE FROM HOBART (LX30H ONLY).

MODELS: LX30, LX30C, LX30H
D-329301
REV. L

SHIPPING WEIGHTS	LX30	LX30C	LX30H
NET WEIGHT OF MACHINE	190 LBS	190 LBS	210 LBS
DOMESTIC SHIPPING WEIGHT	235 LBS	235 LBS	255 LBS

INSTALLATION DIAGRAM (LX30, LX30C & LX30H) — 329301

WARNING:

REQUIRED FLOWING WATER PRESSURE TO THE DISHMACHINE IS 20 ± 5 PSIG. IF PRESSURES HIGHER THAN 25 PSIG ARE PRESENT, A PRESSURE REGULATING VALVE MUST BE INSTALLED IN THE WATER LINE TO THE DISHMACHINE (BY OTHERS).

IMPORTANT: THE SODIUM HYPOCHLORITE (LIQUID BLEACH) CONTAINER SHOULD BE PLACED NO HIGHER THAN 10" ABOVE FLOOR.

IF BLEACH CONTAINER IS TO BE PLACED IN CABINET ADJACENT TO MACHINE, A 1/2" DIA HOLE IS REQUIRED IN THE CABINET TO RUN BLEACH SUPPLY LINE.

USE ONLY 5.2% OR 8.4% SODIUM HYPOCHLORITE (LIQUID BLEACH) AS SANITIZING CHEMICAL TO INSURE PROPER OPERATION OF DISHMACHINE.

DO NOT PRE-MIX WETTING AGENT AND SODIUM HYPOCHLORITE (LIQUID BLEACH).

CERTAIN MATERIALS INCLUDING SILVER PLATE, ALUMINUM AND PEWTER ARE ATTACKED BY SODIUM HYPOCHLORITE (LIQUID BLEACH). SEE INSTRUCTION MANUAL.

NOTES:

1. ALL VERTICAL MACHINE DIMENSIONS TAKEN FROM FLOOR MAY BE INCREASED BY 1".
2. MOIST AIR ESCAPES FROM THE DOOR. USE ONLY MOISTURE RESISTANT MATERIALS ADJACENT TO LX SIDES AND TOP.

PLUMBING NOTES:

1. WATER HAMMER ARRESTOR (MEETING ASSE-1010 STANDARD OR EQUIVALENT) TO BE SUPPLIED (BY OTHERS) IN COMMON WATER SUPPLY LINE AT SERVICE CONNECTION.
2. RECOMMENDED WATER HARDNESS TO BE 4-6 GRAINS FOR BEST RESULTS.
3. MINIMUM WATER CONDUCTIVITY REQUIRED - 30 MICRO-MHOS/CM.
4. IF DRAIN HOSE IS LOOPED ABOVE A SINK, THE LOOP MUST NOT EXCEED 38" AFF.

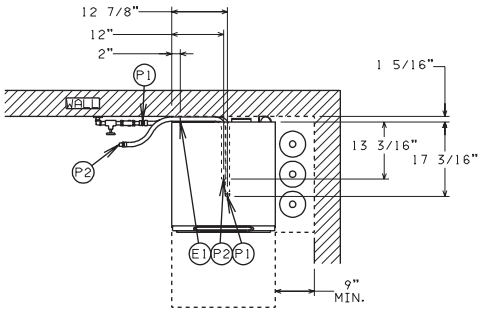

CONNECTION INFORMATION
(*AFF - ABOVE FINISHED FLOOR)

LEGEND

E1 ELECTRICAL CONNECTION:1-3/8" DIA. HOLE FOR 1" TRADE SIZE CONDUIT: 31-3/4" AFF.

P1 SINGLE FILL AND RINSE CONNECTION: 3/4" FEMALE GARDEN HOSE FITTING ON 6' LONG HOSE SUPPLIED WITH MACHINE.; 140°F WATER MIN.; 1-1/2" AFF.

P2 DRAIN CONNECTION: 3/4" MPT FITTING WITH 6' LONG HOSE SUPPLIED WITH MACHINE: 3-9/16" AFF.

WARNING

ELECTRICAL AND GROUNDING CONNECTIONS MUST COMPLY WITH THE APPLICABLE PORTIONS OF THE NATIONAL ELECTRICAL CODE AND/OR OTHER LOCAL ELECTRICAL CODES.

PLUMBING CONNECTIONS MUST COMPLY WITH APPLICABLE SANITARY, SAFETY AND PLUMBING CODES. DRAIN AND FILL LINE CONFIGURATIONS VARY, SOME METHODS ARE SHOWN ON THIS DRAWING.

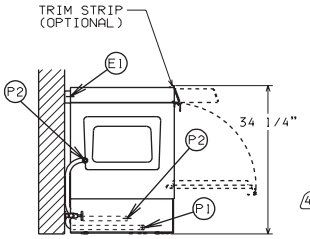

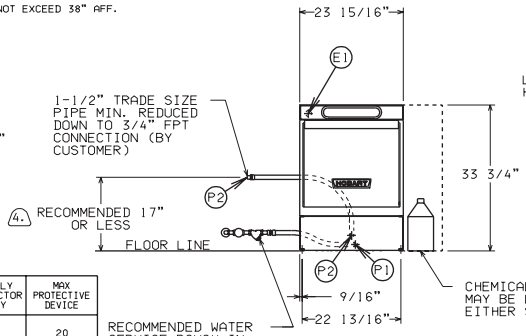

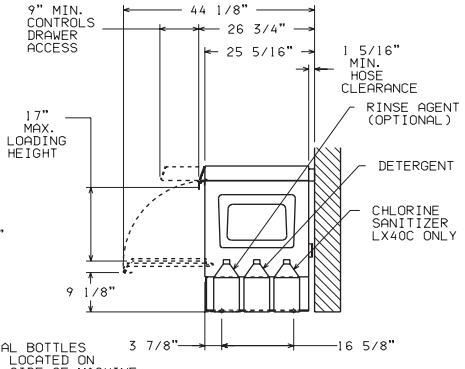

RECOMMENDED WATER SERVICE ROUGH-IN 1/2" TRADE SIZE PIPE MIN. W/SHUTOFF VALVE, LINE STRAINER & 3/4" MALE GARDEN HOSE FITTING (BY CUSTOMER).

CHEMICAL BOTTLES MAY BE LOCATED ON EITHER SIDE OF MACHINE

MACHINE TYPE & SPECIFICATION	RATED AMPS	MIN SUPPLY CKT CONDUCTOR AMPACITY	MAX PROTECTIVE DEVICE
LX40C (120/60/1) USE 90°C 12 AWG (MIN).STRANDED COPPER WIRE ONLY.	15.3	20	20
LX40C (208/60/1):(120/208(3W)/60/1) * USE 90°C 12 AWG (MIN).STRANDED COPPER WIRE ONLY.	14.8	20	20
LX40C (240/60/1):(120/240(3W)/60/1) * USE 90°C 12 AWG (MIN).STRANDED COPPER WIRE ONLY.	13.9	20	20
LX40H (208/60/1):(120/208(3W)/60/1) * USE 90°C 8 AWG (MIN).STRANDED COPPER WIRE ONLY.	43.6	50	50
LX40H (240/60/1):(120/240(3W)/60/1) * USE 90°C 8 AWG (MIN).STRANDED COPPER WIRE ONLY.	38.9	50	50
LX40H (208/60/3) USE 90°C 8 AWG (MIN).STRANDED COPPER WIRE ONLY.	31.2	40	40
LX40H (240/60/3) USE 90°C 8 AWG (MIN).STRANDED COPPER WIRE ONLY.	27.6	35	35
LX40H (480/60/3) USE 90°C 12 AWG (MIN).STRANDED COPPER WIRE ONLY.	13.8	20	20
LX40H (380-400/60/3) USE 90°C 12 AWG (MIN).STRANDED COPPER WIRE ONLY.	15.4-16.0	20	20

* THIS SYSTEM REQUIRES THREE POWER WIRES WHICH INCLUDES A CURRENT CARRYING NEUTRAL, AN ADDITIONAL FOURTH WIRE MUST BE PROVIDED FOR MACHINE GROUND.

OPTIONAL CORD KIT AVAILABLE FROM HOBART (LX40H ONLY).

MODELS:
LX40C,LX40H
D-329302
REV. H

SHIPPING WEIGHTS	LX40C	LX40H
NET WEIGHT OF MACHINE	190 LBS	210 LBS
DOMESTIC SHIPPING WEIGHT	235 LBS	255 LBS

INSTALLATION DIAGRAM (LX40C & LX40H) — 329302

OPERATION

CAUTION: Items such as pewter, aluminum, and silver will be attacked by sodium hypochlorite (bleach). Therefore, chemical sanitizing dishwashers should not be used to wash such items.

If your dishwasher is a chemical sanitizing model, frequently check the clear portion of your chemical feed standpipe (at your sanitizer bottle) to make sure there is a sufficient chemical supply.

BEFORE FIRST USE

This machine must be cleaned after installation and before being put into operation. Refer to Cleaning, page 22.

CONTROLS — Models LX18, LX18C, LX18H, LX30, LX30C & LX30H (Fig. 3)



PL-51113

Model LX18, LX18C & LX18H



PL-51118

Model LX30, LX30C & LX30H

Fig. 3

Operating Models LX18, LX18C, LX18H, LX30, LX30C, and LX30H Dishwashers

DO THIS	DISPLAY SHOWS	REMARKS
Press ON.	Model number.	Dishwasher performs self check. This takes 5-10 seconds.
	FILL lit and sump temperature displayed when machine is filling. FILL ***flashes*** when booster is preheating on models LX18H and LX30H. This preheat could take up to 8 minutes.	Dishwasher fills with water. When filled, pump turns on for 10 seconds. If door is opened during fill cycle, fill will stop. After door is closed, the process continues where it stopped. If WASH is pressed during a fill cycle, a wash cycle will begin at end of fill cycle. If beeper sounds and machine will not fill, turn circuit breaker off, then on, and try again. If problem persists, contact your local Hobart Service Office.
	When filled, sump temperature is displayed.	When filled, machine will maintain a READY state. Heat is maintained in both booster and/or sump.
Open door; slide rack of dishes into dishwasher and add detergent. Close door.	Sump temperature.	If your Model LX30 Series is equipped with the optional detergent pump, detergent will be added automatically during wash cycle.
Press WASH.	WASH lit; sump temperature displayed during wash cycle. RINSE lit; rinse temperature displayed during rinse cycle.	Machine initiates a wash and rinse cycle. If door is opened during wash cycle, cycle will restart from beginning when door is closed. If door is opened during rinse or drain cycle, cycle will continue at point where door was opened upon closing door. If OFF is pressed during cycle, machine will drain and shut down.
When cycle is complete, reload machine for next wash/rinse cycle, or, if not in use, machine will maintain READY mode.	Sump temperature.	Machine will drain and shut down if the programmed idle shutdown time is reached.
At end of day, press OFF.	Display shut down.	When OFF key is pressed, machine will drain and shut down.

DIAGNOSTIC MESSAGES

In the event of a problem with a temperature probe, the display will flash "P1," "P2," or "P3" every 10 seconds. The respective heaters will shut down. Other functions will continue to operate normally. Contact your local Hobart Service Office.

Drain and fill error messages are displayed as E0, E2, E3, E4, E5, E6, or E7. In all cases, the dishwasher will terminate current cycle operations, turn off all heat sources, and display the message until the OFF button is pressed. (A power drain will not occur when turned off.) (See Troubleshooting, pages 26 – 28.) If problem persists, contact your local Hobart Service Office.

MODELS LX18, LX18C & LX18H

Models LX18, LX18C and LX18H can be programmed by Hobart Service as either "True Fill and Dump" or "Modified Fill and Dump".

Modified Fill and Dump

When programmed for "Modified Fill and Dump", water in the sump from a previous cycle is dumped and refilled only if it is below a preset temperature. Advantages: Low water usage if cycled frequently; and, short cycle time if cycled frequently. Disadvantages: Higher water usage if cycled infrequently; and, longer cycle time if cycled infrequently.

Modified Fill and Dump — WASH/RINSE CYCLE TIMES (Factory Default on LX18H)

Drain*	45 Sec. Max.	22 Sec. Typical
Fill*	65 Sec. Max.	40 Sec. Typical
Wash*	115/140 Sec.	
Drain	45 Sec. Max.	22 Sec. Typical
Fill	65 Sec. Max.	40 Sec. Typical
Rinse	15 Sec.	

* Drain and Fill only if the sump water temperature is below 160°F in LX18 or LX18H machines, or 130°F in LX18C chemical sanitizing machines. The slower cycle will also have a 140 second wash instead of the 115 second wash.

True Fill and Dump

When programmed for "True Fill and Dump", the sump is empty at the start and end of a cycle. Advantages: Consistent, short cycle time; and, will not dump manual detergent charge. Disadvantage: Uses more water.

True Fill and Dump — WASH/RINSE CYCLE TIMES (Factory Default on LX18 and LX18C)

Necessary for all installations where detergent is added manually.

Fill	65 Sec. Max.	40 Sec. Typical
Wash	70 Sec.	
Drain	45 Sec. Max.	22 Sec. Typical
Fill	65 Sec. Max.	40 Sec. Typical
Rinse	15 Sec.	
Drain	45 Sec. Max.	22 Sec. Typical

MODELS LX30, LX30C and LX30H

WASH/RINSE CYCLE TIMES

Wash	85 Sec.**
Drain*	10 Sec. Max.
Dwell	4 Sec.
Rinse	10 Sec.
Dwell	6 Sec.

* Drains off about 1 gallon of water.
**Wash time is 145 seconds for 70°F rise option.

CONTROLS — Models LX40H & LX40C (Fig. 4)

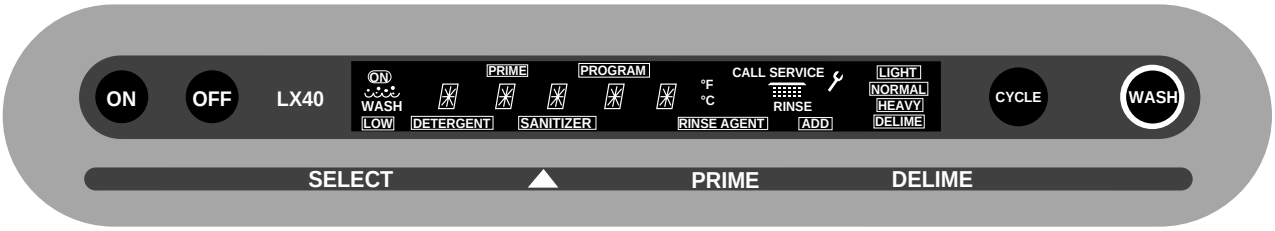

PL-52242

Models LX40H & LX40C

Fig. 4

Operating Models LX40H & LX40C

DO THIS	DISPLAY SHOWS	REMARKS
Press ON.	Two counts of "00000" to "99999", then model number.	Dishwasher performs self check. This takes 5-10 seconds.
	FILL displayed when machine is filling. WAIT displayed when booster is preheating. This preheat could take up to 8 minutes.	Dishwasher fills with water; detergent is added automatically. When filled, pump turns on for 10 seconds. If WASH is pressed during a fill cycle, a wash cycle will begin at the end of the fill cycle. If door is opened during a fill cycle, the fill will stop. After door is closed, the process continues where it stopped. If beeper sounds and machine will not fill, turn circuit breaker off, then on, and try again. If problem persists, contact your local Hobart Service Office.
	When filled, ON lit and READY displayed.	Machine will maintain a READY state. Heat is maintained in both booster and/or sump.

Operating Models LX40H & LX40C (Continued)

DO THIS	DISPLAY SHOWS	REMARKS
Open door; slide rack of dishes into dishwasher. Close door.	READY.	
Press WASH. (Before you press WASH, you can change the cycle selection if desired. See READY MODE below.)	WASH lit and sump temperature displayed during wash cycle. RINSE lit and incoming water temperature displayed during rinse cycle.	Machine initiates a wash and rinse cycle. If door is opened during wash cycle, cycle will restart from beginning when door is closed. If door is opened during drain or rinse cycle, cycle will continue at point where door was opened upon closing door. If OFF is pressed during the wash/rinse cycle, the machine will drain and shut down.
When cycle is complete, reload machine for next wash/rinse cycle, or, if not in use, machine will maintain READY mode.	READY.	Machine will drain and shut down if the programmed idle shutdown time is reached.
At end of day, press OFF.	Display shut down.	When OFF is pressed, machine will drain and shut down.

Ready Mode

When the dishwasher is in the READY mode (a cycle is not running), the selected cycle (LIGHT, NORMAL, HEAVY) is illuminated. If the cycle selection is not locked, you can change the selection by pressing CYCLE until the desired cycle is lit. If cycle selection is locked, there will be no response when CYCLE is pressed.

DIAGNOSTIC MESSAGES

In the event of a problem with a temperature probe, the display will *flash* PROBE and CALL SERVICE will be lit. The respective heaters will shut down. Other functions will continue to operate normally. Contact your local Hobart Service Office.

Drain and fill error messages are displayed as PRBLM/DR1, PRBLM/FILL1, PRBLM/FILL2, PRBLM/FILL3, PRBLM/DR2, or OP J1. In all cases, the dishwasher will terminate current cycle operations, turn off all heat sources, and display the message until the OFF button is pressed. (A power drain will not occur when turned off.) (See TROUBLESHOOTING in this manual.) If problem persists, contact your local Hobart Service Office.

MODELS LX40H & LX40C — WASH/RINSE CYCLE TIMES

Cycle	Wash	Drain	Dwell	Rinse	Dwell
Light	55 Sec.	10 Sec. Max.	4 Sec.	10 Sec.	6 Sec.
Normal	85 Sec.	10 Sec. Max.	4 Sec.	10 Sec.	6 Sec.
Heavy*	145 Sec.	10 Sec. Max.	4 Sec.	10 Sec.	6 Sec.

* Heavy cycle can be adjusted (see MANAGER PROGRAMMING).

OPERATOR PROGRAMMING

If machine is off, turn it ON and wait for the machine to go into READY mode. To enter the Operator Programming Mode, **press** and **hold** "LX40" on the control panel (this is the HIDDEN key), then press the WASH key. When the display indicates "-----" while illuminating both DETERGENT and PRIME, release HIDDEN key and WASH. You are now in the operator programming mode. Press SELECT to cycle through the programming options. To exit the programming mode, press SELECT until the display shows READY.

Priming Chemical Pumps

After entering the Operator Programming Mode, use SELECT to cycle through PRIME RINSE AGENT, PRIME SANITIZER, and PRIME DETERGENT. Press PRIME to start the priming operation. The selected pump will run for the programmed time. During priming, the PRIME and the pump name will be lit. PLEAS and WAIT will be displayed. When priming is complete, the display will stop flashing and "-----" will be displayed. You can now select another pump, DELIME, or return to normal operation by pressing the SELECT button.

After priming a sanitizer pump, a rinse cycle will begin automatically.

Delime Cycle

Pressing the DELIME key will begin a DELIME cycle which is explained on page 25.

MANAGER PROGRAMMING (Machine Must Be In READY Mode)

To enter the Manager Programming Mode, you must first enter the Operator Programming Mode by **pressing** and **holding** "LX40" on the control panel (this is the HIDDEN key), then pressing WASH. Once you are in the Operator Programming Mode, press SELECT until PROGRAM is lit. **Press** and **hold** the HIDDEN key, then press WASH again to enter the Manager Programming Mode.

The possible options to edit are listed in the following table. Use SELECT to move through each parameter. When the parameter you wish to reprogram is displayed, use UP ARROW to change the value. After the correct value is displayed, press SELECT to lock in the displayed value and to move to the next programming option. The programming range of values for each parameter is shown in the table under Programmable Variables and Recommended Settings — Models LX40H & LX40C, page 20.

PARAMETER	DISPLAY SHOWS
Sump temperature.	PROGRAM, with the display alternating between SUMP and the programmed temperature.
Booster temperature ("H" model only)	PROGRAM, with the display alternating between BOOST and the programmed temperature.
°F / °C	PROGRAM, and the °F or °C prompt.
Detergent pump time.	PROGRAM, DETERGENT, and programmed time.
Rinse agent pump ratio.	PROGRAM, RINSE AGENT and programmed ratio.
Sanitizer pump ratio ("C" Model only).	PROGRAM, SANITIZER and programmed ratio.
Cycle selection lockout.	PROGRAM and LOCK or UNLK.
Default cycle selection. (Default means "cycle selected upon power-up.")	PROGRAM, current default cycle indicator, and the DEFLT prompt.
Automatic delime reminder.	PROGRAM, DELIME and programmed number of cycles.
Detergent prime time.	PROGRAM, PRIME, and DETERGENT lit with the programmed time displayed.
Rinse agent prime time.	PROGRAM, PRIME, and RINSE AGENT lit with the programmed time displayed.
Sanitizer prime time.	PROGRAM, PRIME, and SANITIZER lit with programmed time displayed.
Heavy wash cycle - wash time.	PROGRAM, WASH and programmed time.
Heavy wash cycle - rinse time.	PROGRAM, RINSE and programmed time (NORM or EXTEN).
Idle shutdown time.	PROGRAM, with display alternating between "SHDN" and the programmed shutdown time in hours.

To exit the manager programming mode do one of the following:

1. Press OFF (machine shuts down but does not drain).

2. Press SELECT until the display shows READY.

3. **Press** and **hold** the HIDDEN key, then press WASH.

PROGRAMMABLE VARIABLES AND RECOMMENDED SETTINGS — MODELS LX40H & LX40C

The following functions of the dishwasher are programmable. The chart below shows the variables that may be programmed for each function and the recommended setting for each.

FUNCTION	PROGRAMMABLE VARIABLES	RECOMMENDED SETTING
Wash Setpoint	H Models: 160°F - 170°F	165°F
	C Models: 130°F - 150°F	130°F
Booster Setpoint	180°F - 199°F	190°F
Temperature Display Mode	°F; °C	°F
Sanitizer Duty Cycle (LX40C Only)	OFF; 1 - 10 (In steps of 1) (10-100%)	40%
Detergent On Time	OFF; 1 - 30 Seconds (In steps of 1)	7 Seconds
Rinse Agent Duty Cycle	OFF; 1 - 10 (In steps of 1) (10-100%)	70%
Idle Shutdown Time	1 - 6 Hours (In steps of 1)	4 Hours
Cycle Selection (Lock/Unlock)	Lock; Unlock	Unlock
Default Cycle	Light; Normal; Heavy	Light
Delime Counter Preset	*OFF; 500 - 3000 Cycles (In steps of 25)	***1500 Cycles
Detergent Prime Time	**25 - 75 Seconds (In steps of 1)	35 Seconds
Rinse Agent Prime Time	**25 - 75 Seconds (In steps of 1)	35 Seconds
Sanitizer Prime Time	**25 - 75 Seconds (In steps of 1)	35 Seconds
Heavy Wash Time	100 - 200 Seconds (In steps of 1)	156 Seconds
Heavy Rinse Time	Normal = 10 Sec.; Exten. = 20 Sec.	Normal

* Disabled if OFF is programmed. Factory Setting is 1500 Cycles.
** Not available if pump is turned OFF.
*** Determined by water condition.

PREPARATION — ALL MODELS

Make sure the coarse (Fig. 5) and fine (Fig. 6) strainers are in place and free of debris. Check both wash arms (all models) and rinse arms (models LX30, LX30H, LX30C, LX40H & LX40C only) to make sure they spin freely and are not clogged.



Model LX30

Fig. 5

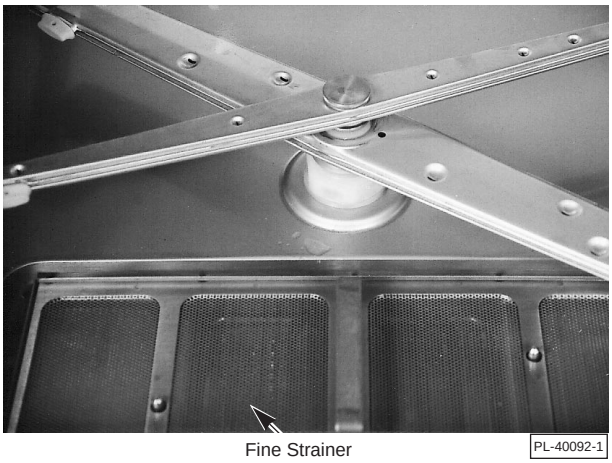

Model LX30

Fig. 6

Dishes must be scraped and/or rinsed to remove food particles and other debris. Never use steel wool on ware to be loaded into the dishwasher. Place dishes in a rack. Do not stack dishes on top of each other as water must have free access to all sides of every dish. Stand plates edgewise in a peg-type rack (Fig.7). Cups, glasses and bowls should lay upside down in an open or compartment-type rack (Fig. 7). Silverware and other small pieces should lay loosely on the bottom of a flat-bottom rack. See Operator Card (supplied) for other loading patterns. Do not allow foreign objects to enter the unit, especially metallic contaminants such as staples, paper clips, etc.

Check to see if any detergent, rinse aid, or sanitizer chemicals need to be replenished. Use only commercial type detergents, as prescribed by your chemical professional.

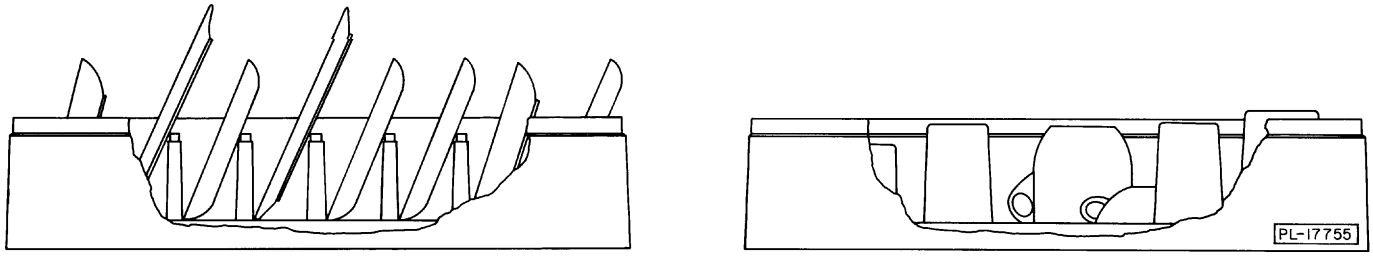

Fig. 7

DOs AND DON'Ts FOR YOUR NEW HOBART WAREWASHER

DO assure proper water hardness.

DO pre-scrap dishes thoroughly.

DO use only detergents recommended by your chemical professional.

DO at the end of the day, thoroughly cleanse the machine, rinse, and dry (leave door open).

DO closely follow your chemical professional's prescribed deliming schedule.

DO use only products formulated to be safe on stainless steel.

DO NOT over-soften water (recommended water hardness is no less than 4 grains per gallon).

DO NOT use detergents formulated for residential dishwashers.

DO NOT allow food soil to accumulate on the tank bottom.

DO NOT exceed chemical manufacturer's recommended concentrations for detergent, sanitizer, rinse aid, or lime scale remover.

DO NOT use steel wool to clean ware or warewasher surface.

DO NOT allow foreign objects to enter the unit, especially metallic contaminants.

NOTE: Failure to follow use, care, and maintenance instructions may void your Hobart warewasher warranty.

CLEANING — ALL MODELS

This machine must be cleaned at least once each working day. Use only products formulated to be safe on stainless steel.

1. Press OFF. The machine will drain. When the display is no longer lit, open the door and remove any debris from the bottom of the tank. Do not allow food soil to accumulate on the tank bottom.

2. **Models LX30, LX30C, LX30H, LX40C & LX40H Only:** Remove the lower rinse arm by unscrewing the knurled knob (Fig. 8). Remove the lower wash arm by pulling the arm off the shaft. Remove the upper rinse and wash arms in the same manner. Remove the coarse and fine strainers (see Figs. 5, 6). Thoroughly clean these items in a sink.

   Models LX18, LX18C & LX18H Only: Remove the upper and lower wash arms by unscrewing the knurled knob (Fig. 8). Remove the coarse and fine strainers (see Figs. 5, 6). Thoroughly clean these items in a sink.

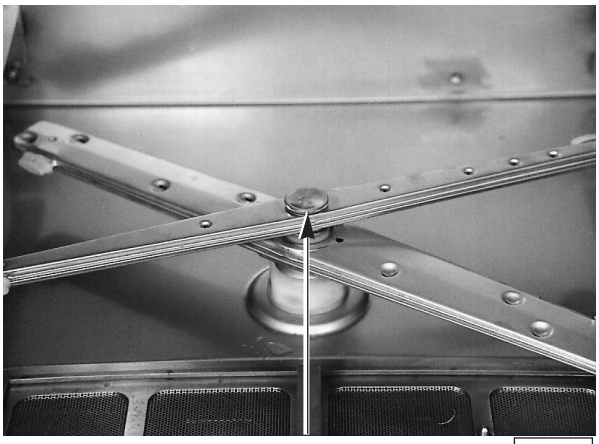

Model LX30

Fig. 8



Model LX30

Fig. 9

3. With a damp cloth, wipe the interior of the machine, the water level probes (Fig. 9), and the water level probe under the fine strainer. DO NOT use steel wool. Wipe the exterior of the machine. When cleaning the inside of the door, be sure to wipe the lip at the bottom of the door. Remove any remaining debris with a mild cleanser formulated for stainless steel and a soft cloth or brush.

4. **Models LX30, LX30C, LX30H, LX40C & LX40H Only:** Replace the coarse and fine strainers. Reinstall the lower wash arm by pushing it down on the shaft, then place the lower rinse arm on the shaft and tighten the knurled knob. Spin arms to make sure they spin freely. Repeat this procedure with the upper wash and rinse arms.

   Models LX18, LX18C & LX18H Only: Replace the coarse and fine strainers. Reinstall the upper and lower wash arms and tighten the knurled knob. Spin arms to make sure they spin freely.

5. Use a soft damp cloth or sponge and mild cleanser to clean the control keypad and display. DO NOT use abrasive or harsh cleaners or scouring pads.

6. Leave the door ajar overnight to allow the interior to air out and dry.

MAINTENANCE

DELIMING — GENERAL

WARNING: DELIMING SOLUTION, RINSE AGENTS, OR ANY OTHER KIND OF ACID MUST NOT COME IN CONTACT WITH BLEACH OR RINSE SOLUTION CONTAINING BLEACH USED IN CHEMICAL SANITIZING MACHINES. MIXING MAY CAUSE HAZARDOUS GAS TO FORM. THIS ENTIRE PROCEDURE MUST BE FOLLOWED STEP-BY-STEP FOR SAFE AND SATISFACTORY RESULTS.

Delime the dishwasher on a regular basis as required. The regularity will depend on mineral content of the supply water. Deliming should be done when you can see clear signs of lime deposits (a white chalky substance) on the inside walls and on the wash arms. If you have a model LX40 dishwasher, it is equipped with an automatic delime cycle reminder. It is recommended that deliming be done when DELIME flashes.

Inspect the machine interior for lime deposits. If deliming is necessary, a deliming agent (such as Lime Away or LSR) should be used for best results.

Depending upon the model of your machine, carefully follow the appropriate procedure outlined below.

DELIMING — Models LX18, LX18C & LX18H

1. Remove standpipe assemblies from chemical containers and place them as close to the floor as possible. Place a catch pan under them.
2. Cycle the machine four times to clear the lines of chemicals.
3. Remove rack from machine.
4. Close door.
5. Proceed with step 5 only if your machine is programmed for Modified Fill and Dump. If your machine is programmed for True Fill and Dump, skip step 5 and proceed directly to step 6.

   If the displayed temperature is 160°F or below (130°F for LX18C models), start a cycle and wait for the machine to drain and fill. Open the door slowly just after the wash pump starts.

   If the displayed temperature is above 160°F (130°F on LX18C), start a cycle. Open the door slowly just after the wash pump starts.
6. Add deliming agent (carefully follow supplier's instructions). The sump holds approximately 3 gallons of water.
7. Close door. Machine will complete the wash/rinse cycle.
8. Inspect interior of machine for lime deposits. Repeat steps 4 through 8 if necessary.
9. Press ON. Run two cycles to purge the system of deliming agent. Press OFF.
10. Put standpipe assemblies back into the appropriate chemical containers (see page 8).
11. Press ON. Run four cycles to prime the chemical delivery pumps.
12. Press OFF.

CAUTION: Do not allow the deliming agent to remain in the machine longer than recommended by the deliming agent manufacturer.

DELIMING — Models LX30, LX30C & LX30H

1. Remove standpipe assemblies from chemical containers and place them as close to the floor as possible. Place a catch pan under them.

2. Cycle the machine four times to clear the lines of chemicals.

3. Remove rack from machine.

4. Add deliming agent (carefully follow supplier's instructions). The sump holds approximately 3 gallons of water.

5. Close door. Press WASH and allow machine to complete the wash/rinse cycle.

6. Press OFF.

7. Inspect the interior of the machine for lime deposits. If necessary, press ON to fill machine and repeat steps 4 through 7.

8. Press ON. Run two cycles to purge the system of deliming agent. Press OFF.

9. Put standpipe assemblies back into the appropriate chemical containers (see page 8).

10. Press ON. Run four cycles to prime the chemical delivery pumps.

11. Press OFF.

CAUTION: Do not allow the deliming agent to remain in the machine longer than recommended by the deliming agent manufacturer.

DELIMING — Models LX40H and LX40C

Models LX40H and LX40C are equipped with an automatic delime cycle reminder. After the preprogrammed number of cycles has expired, the control will indicate the delime request by illuminating DELIME. At this point, you must either enter a delime cycle or reprogram the number of cycles to terminate the DELIME indication.

1. Remove rack from machine. Close door.

2. Make sure machine is in the READY mode (READY indicated in the display).

3. To select a delime cycle, you must first enter the operator programming mode. **Press** and **hold** the HIDDEN key ("LX40" on the control panel), then press WASH. When the display indicates "-----" while illuminating both DETERGENT and PRIME, release HIDDEN key and WASH. You are now in the operator programming mode.

4. While in the operator programming mode, press the DELIME key to initiate a delime cycle. The machine will shut off the heat and will drain the water from the machine. Display will show PLEAS and WAIT. A fill cycle will then be performed.

5. After the fill cycle, the control will prompt you to add delimer by flashing "ADD" and "CHEM" with ADD and DELIME lit. Open the door and add deliming agent (carefully follow supplier's instructions). The sump holds approximately 3 gallons of water.

6. After delimer has been added, close the door. The control will flash "PRESS DELIM". Press the DELIME key again to continue the cycle. The machine will enter the wash mode for 5 minutes, then will begin two rinse and drain operations. The DELIME symbol will be lit and PLEAS and WAIT will show in the display.

   DO NOT interrupt the cycle. Should the process be interrupted, restart delime procedure from the beginning.

7. After the deliming operation is completed, the DELIME and ON indicators will automatically turn off, and power to the control will be turned off.

8. Inspect the interior of the machine for lime deposits. If necessary, turn the machine ON and repeat steps 2 through 8.

CAUTION: Do not allow deliming agent to remain in the machine longer than recommended by the deliming agent manufacturer.

LUBRICATION

The pump motor has permanently sealed bearings and requires no lubrication.

TROUBLESHOOTING

This section outlines various symptoms and possible causes that may be encountered in the event of abnormal machine operation. If symptoms persist after possible causes have been checked, service may be required.

SYMPTOM	POSSIBLE CAUSES
No machine operation (No display).	1. Machine OFF — turn machine ON. 2. Blown fuse or circuit breaker off at power supply. 3. Cord not plugged in (corded models only)
No machine operation (With display).	1. Display: "dr" "oP" (or "door open" on LX40 Series) — open and close door. If problem persists, contact your local Hobart Service Office. 2. See MACHINE WON'T FILL.
Dishes not clean.	1. Strainers clogged causing inadequate water supply to pump — clean per instructions in CLEANING section. 2. Obstruction in wash arm(s) or wash arms won't turn — clean per instructions in CLEANING section. 3. Rinse arms (Models LX30 & LX40 only) won't turn — check that they spin. 4. Detergent dispenser may be clogged. 5. Soil quantity — scrape dishes before cycle. 6. Improper rack loading — see PREPARATION in this manual. 7. Low water — check water pressure. 8. Water temperature too low — note wash temperature on display during WASH; should be above 120°F for chemical sanitizing machines and above 150°F for other machines. 9. Incoming water supply turned off. 10. Arm plugs missing.
Spotting of silverware, glasses or dishes.	1. Improperly loaded racks. 2. Water temperature too low. 3. Improper type or concentration of detergent — contact your local detergent representative. 4. Hard water — install a water softener; use a rinse agent. 5. Insufficient fill — check water pressure.
Chemicals not feeding.	1. Low on chemicals — check levels. 2. Air leak at feeder hose connections — check for snugness. 3. Tubes kinked — check for smooth bends.
Food soils remain in dishwasher.	Follow daily cleaning instructions.

SYMPTOM	POSSIBLE CAUSES
Unexpected results on dishes.	1. Etching — usually caused by any combination of high temperatures, soft water, soft glass, or high alkaline washing solutions. 2. Tarnishing — avoid washing silver, silver plate and pewter in chemical sanitizing machines. 3. Pitting — stainless steel may pit with lengthy contact of foods containing salt, fruit juices, vinegar, etc. Wash immediately. 4. Black or gray marks — may have been rubbed with aluminum. 5. Brown stains — may be due to high iron content in water supply. 6. Chipping — improper loading or ware is too delicate. 7. Fading of china patterns — usually due to high water temperature and strong detergent. Check that china is dishwasher compatible. 8. Wooden ware damage — avoid washing in dishwasher. 9. Rust on cast iron — seasoning is lost in dishwasher. Avoid dishwasher cleaning. 10. Plastic ware distortion — high temperatures. Check plastic ware's instructions.
Low temperature readings.	1. Low water supply temperature — make sure it meets the recommended limits. 2. Rapid cycle use — if incoming water temperature is low and cycle use rate is high, the hot water supply may be insufficient to meet the demand. 3. Heavy ware load cools wash water — do not overload racks. 4. Booster heater or sump heater set low — set for higher value on LX40H; call Hobart Service Technician for LX18H and LX30H.
Machine won't fill or won't fill high enough. (LX18, LX30 display shows "E0," "E2," "E3," or "E4". LX40 display shows "DR1 PRBLM," "FILL1 PRBLM," FILL2 PRBLM," or "FILL3 PRBLM". Machine will not run.)	1. Low water pressure — check for clogged hose strainer; check that site water pressure meets minimum flow pressures. 2. Make sure probes are clean (see Cleaning, page 22). 3. No water pressure — main water supply valves may not be working. 4. Drain valve open — turn machine OFF to drain machine, then ON. Repeat twice (this assists in clearing any drain valve obstructions). Wait for machine to reach READY mode and press WASH. Slowly open door several seconds later and note water level. Close door; 30 seconds later, open door slowly and check that water level is the same as it was. If not, repeat the OFF-ON procedure. If problem persists, call your local Hobart Service Office. 5. Delime machine.
Dishwasher makes noises after it drains when it is turned off.	Drain valve — this is normal; the drain valve operates several times to ensure it remains clear of obstructions.

SYMPTOM	POSSIBLE CAUSES
Machine fills too high or leaks from door. Machine won't drain. (Display shows "E5" on LX18 and LX30 models, or "PRBLM DR2" on LX40.)	1. Machine not level — see LEVELING in this manual. 2. Fill solenoid valve leaking — turn the dishwasher OFF; if water continues to come in (through the rear fill air gap on LX18 models or rinse arms of LX30 and LX40 models), call your local Hobart Service Office. 3. Drain pipes restricted — check dishwasher drain line for kinks; ensure proper drain rate is allowed from plumbing. 4. Turn machine OFF. Wait several seconds, then turn back ON. Repeat this procedure twice if necessary. If problem persists, contact your local Hobart Service Office.
Some water occasionally drips out of rinse arms (LX30 and LX40 models) or from the water inlet on the back wall (LX18 models) when machine is idle ("H" dishwashers only.)	This is normal due to expansion of water being heated in the booster tank.
Machine displays "E6" on LX18 and LX30 models or "OP J1" on LX40 models.	Contact your local Hobart Service Office.
Machine drains water after pressing WASH.	This is normal operation on LX18 models if water temperature is too low (see page 14).
Machine lights up wrench and flashes "P1", P2", or "P3" on LX18 and LX30 models), or "PROB1", "PROB2", or "PROB3" on LX40 models.	Contact your local Hobart Service Office.
Machine displays "E7" on LX30 model or "CLEAN PROBE" on LX40 model.	1. Clean water sensors inside tank. 2. Contact your local Hobart Service Office.

SERVICE

Contact your local Hobart-authorized service office for any repairs or adjustments needed on this equipment.