CATALOG OF REPLACEMENT PARTS



6925

2000 SERIES SLICER - 2612, 2612C, 2612GC, 2612PHS, 2712, 2712C, 2712PHS, 2812, 2812PS, 2912, 2912B, 2912C, 2912PS

Too Many MLS to list, See Cover in InDesign

A product of HOBART 701 S. RIDGE AVENUE TROY, OHIO 45374-0001

FORM 43081 Rev. F (June 2019)

 © HOBART 2019

Table of Contents

5 KNIFE DRIVE MOTOR
7 KNIFE SHAFT
9 SCALE ASSEMBLY (2812PS & 2912PS SERIES)
11 TOP COVER AND LOCK KNOB
13 DISPLAY TOWER ASSEMBLY (2812PS SERIES)
15 CARRIAGE TRAY
17 ACCESSORIES
19 GAUGE PLATE AND INDEX
21 KNIFE SHARPENER
23 ELECTRICAL UNIT
25 BASE UNIT (2612 & 2812 SERIES)
27 BASE UNIT (2712 & 2912 SERIES)
29 AUTOMATIC BASE UNIT
31 TRANSPORT CARRIER (2612 & 2712 SERIES)
33 TRANSPORT CARRIER (2812 & 2912 SERIES)
35 AUTOMATIC CARRIER UNIT
37 ELECTRICAL COVER ASSEMBLY (2712 & 2912 SERIES)
39 ELECTRICAL COVER ASSEMBLY (2912B, ML-134251)
41 ELECTRICAL COVER ASSEMBLY (2912PS, ML-134247 & ML-136175)
43 WIRING HARNESS (2712 SERIES)
45 WIRING HARNESS (2812 & 2812PS SERIES)
47 WIRING HARNESS (2912 ML-136111, ML-136113) (2912B ML-134251)
49 WIRING HARNESS (2912 ML-134245, ML-136111, ML136113) (2912C ML-134248)
51 WIRING HARNESS (2912PS, ML-134247)

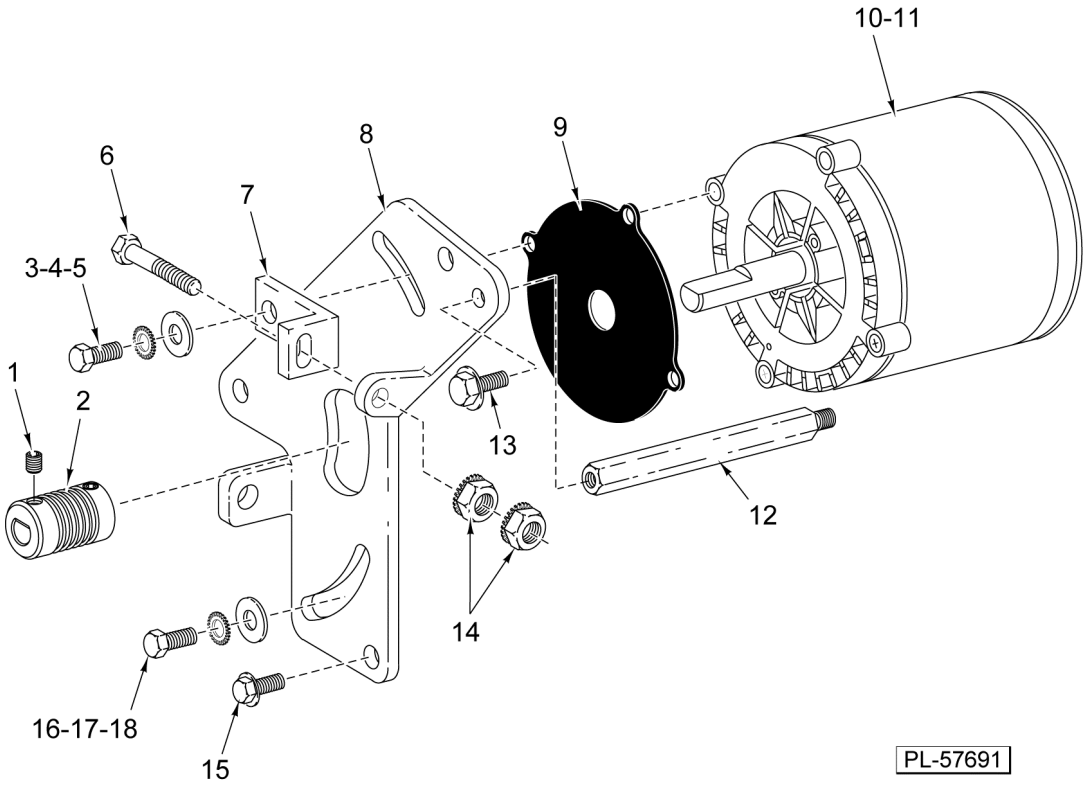

KNIFE DRIVE MOTOR

KNIFE DRIVE MOTOR

ILLUS. PL-57691	PART NO.	NAME OF PART	AMT.
1	SC-123-65	Set Screw 1/4-28 x 3/8 Hex Hdls., Flat Pt. (SST)	2
2	00-438844-00002	Sheave - Poly "V"	1
3	SC-037-73	Cap Screw 3/8-16 x 1 Hex Hd	2
4	WL-007-25	Lockwasher 3/8 External	2
5	WS-018-22	Washer	2
6	SC-118-98	Cap Screw 1/4-20 x 2 Hex Hd	1
7	00-477532	Bracket - Tensioner Adjustment	1
8	00-477760	Plate - Motor	1
9	00-439032	Gasket - Motor	1
10	00-438846-00001	Motor (60 Hz.) (115/230 V.)	1
11	00-438846-00002	Motor (50 Hz.) (115/230 V.)	1
12	00-438984	Standoff	1
13	SC-041-01	Cap Screw 1/4-20 x 3/4 Hex Hd. (SST)	1
14	NS-044-14	Nut 1/4-20 Hex KEPS	2
15	SD-038-18	Self-Tapping Screw 5/16-18 x 3/4 Hex Washer Hd., Type RL	3
16	SC-037-73	Cap Screw 3/8-16 x 1 Hex Hd	1
17	WL-007-25	Lockwasher 3/8 External	1
18	WS-018-22	Washer	1

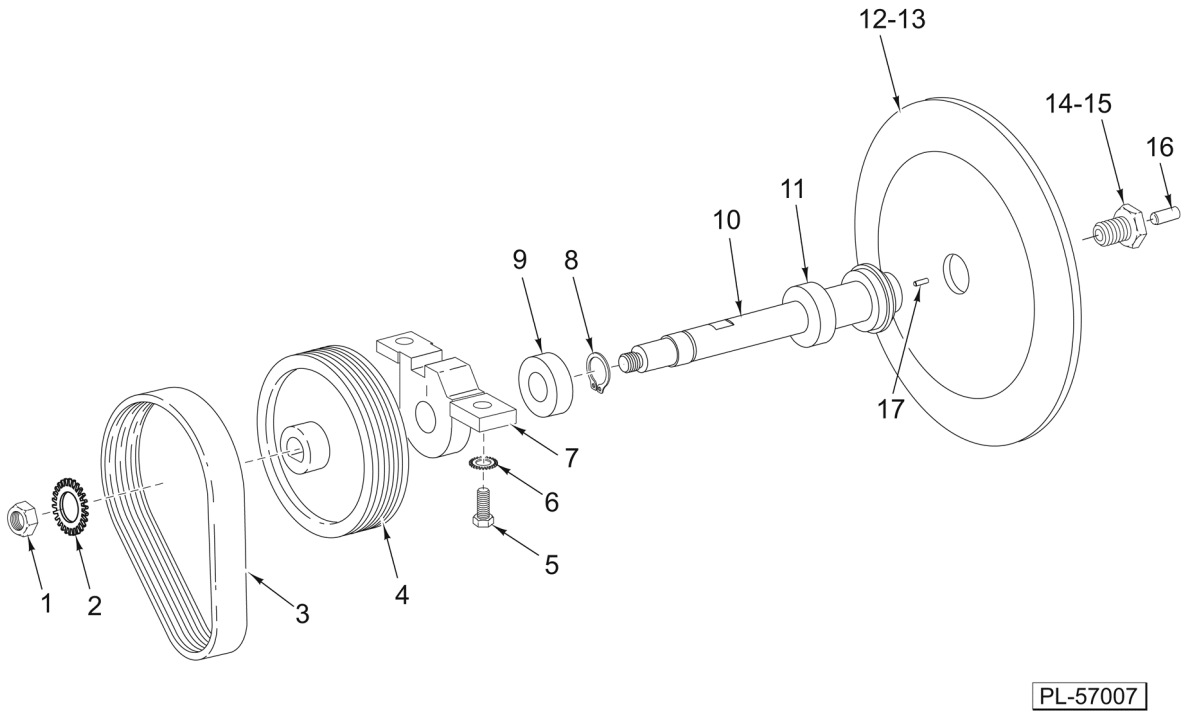

KNIFE SHAFT

KNIFE SHAFT

ILLUS. PL-57007	PART NO.	NAME OF PART	AMT.
1	NS-017-41	Jam Nut 5/8-18 Hex (SST)	1
2	WL-004-17	Lockwasher 5/8 Light	1
3	00-438845	Belt - Poly "V"	1
4	00-439049	Sheave - Poly "V" Large 6 Groove	1
5	SC-037-73	Cap Screw 3/8-16 x 1 Hex Hd	2
6	WL-007-25	Lockwasher 3/8 External	2
7	00-875180-00002	Retainer - Lower Hub & Bearing (Incls. Item 9)	1
8	RR-009-07	Retaining Ring	1
9	BB-021-66	Bearing - Ball	1
10	00-438915-00002	Shaft - Knife (Incls. Item 11)	1
11	BB-021-66	Bearing - Ball	1
12	00-439870-00005	Knife (Packaged)	1
13	00-439870-00006	Knife (Packaged) (2912B)	1
14	00-073356-00002	Screw - Knife (Incls. Items 15 & 16)	1
15	SC-064-04	Set Screw 1/4-28 x 3/8 Hdls., Flat Pt. "Nylok"	1
16	00-073265	Plug - Plate Thrust	1
17	PG-006-30	Pin - Grooved (1/4 In.)	1

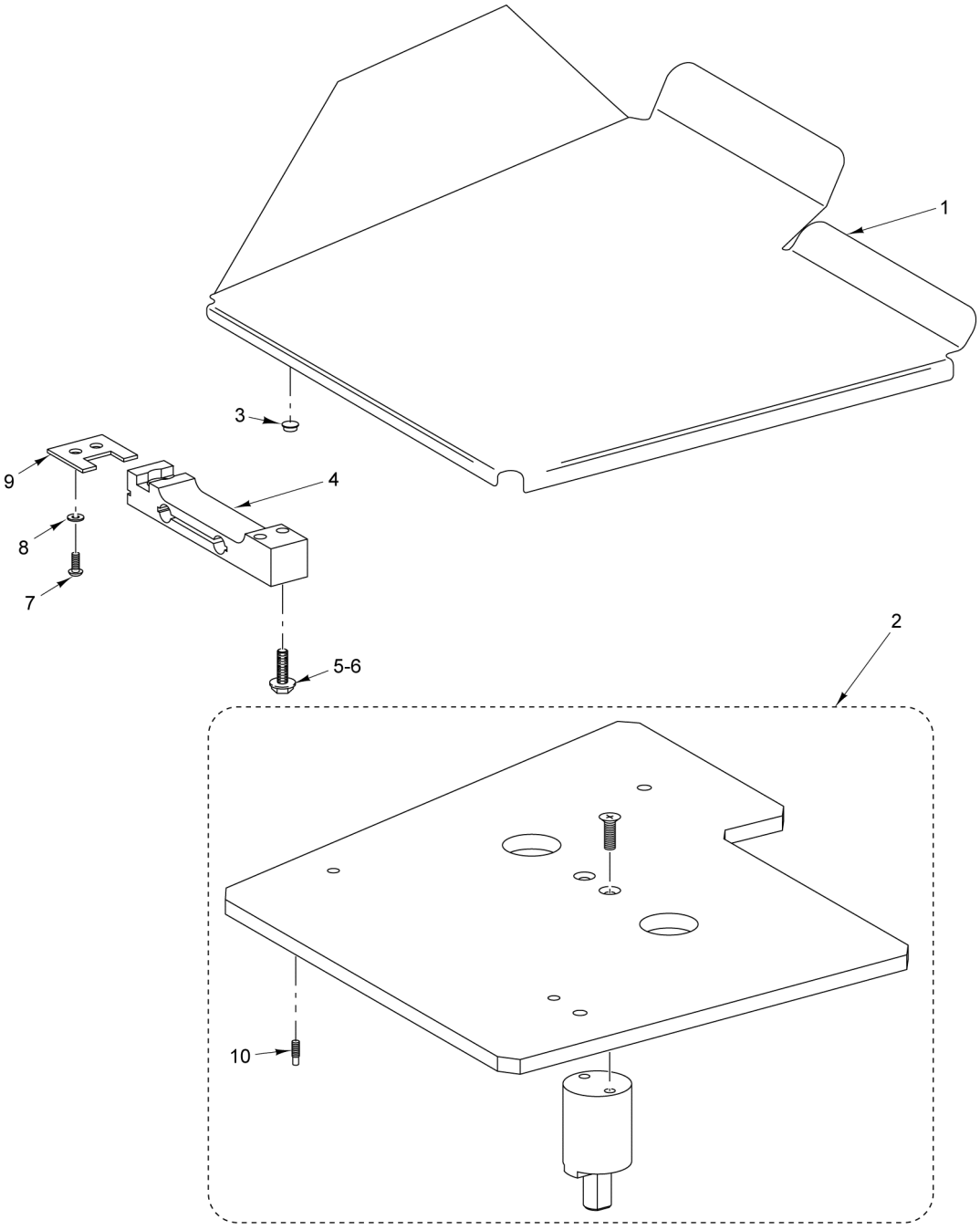

2812PS	ML-134241	**2912PS**	ML-134247
2812PS	ML-136114	**2912PS**	ML-136175
2812PS	ML-136169		

11 00-477227 Scale - PCB Assy.
PART NOT ILLUSTRATED

PL-57002

SCALE ASSEMBLY
(2812PS & 2912PS SERIES)

SCALE ASSEMBLY
(2812PS & 2912PS SERIES)

ILLUS. PL-57002	PART NO.	NAME OF PART	AMT.
1	00-477517	Platter Assy.	1
2	00-477662	Platter - Support Assy. (Incls. Item 10)	1
3	00-439986	Pad - Rubber	2
4	00-873267	Load Cell	1
5	SC-041-06	Cap Screw 1/4-20 x 1-1/4 Hex Hd. (SST)	2
6	WL-013-14	Lockwasher 1/4 Internal Shakeproof	2
7	SC-093-04	Mach. Screw 8-32 x 1/2 Phil. Pan Hd. (SST)	2
8	WL-013-08	Lockwasher #8 Internal Shakeproof	2
9	00-477684	Plate - Load Cell	1
10	00-479093	Set Screw (Machined)	2
11	00-477227	Scale - PCB Assy. (2812PS)	1

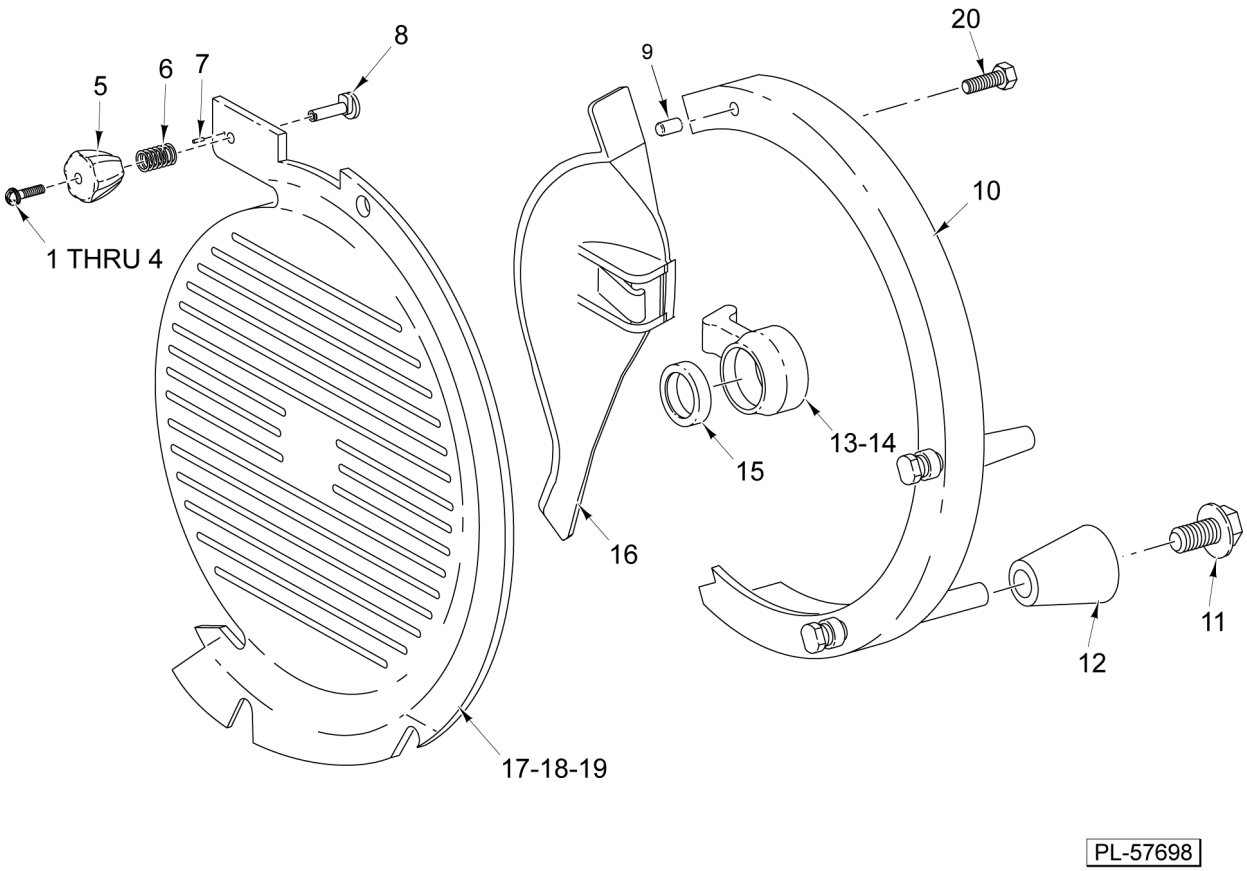

TOP COVER AND LOCK KNOB

TOP COVER AND LOCK KNOB

ILLUS. PL-57698	PART NO.	NAME OF PART	AMT.
1	SC-130-53	Mach. Screw 4-40 x 3/4 Tx. Button Hd. (Correctional)	1
2	SC-122-53	Mach. Screw 4-40 x 5/8 Phil. Pan Hd. (SST)	1
3	SC-126-35	Mach. Screw 4-40 x 5/8 Phil. Pan Hd. (2612PHS & 2712PHS)	1
4	WL-013-02	Lockwasher #4 Internal Shakeproof (SST)	1
5	00-915167	Knob - Locking Top Cover	1
6	00-437994	Spring - Top Cover	1
7	PG-011-30	Pin - Grooved (3/32) (SST)	1
8	00-875265	Stud - Locking (Top Cover)	1
9	PG-006-27	Pin - Grooved (1/4 In.)	1
10	00-438920-00003	Guard Assy. - Knife Ring	1
11	SD-038-14	Self-Tapping Screw 1/4-20 x 7/8 Hex Washer Hd., Type RL (SST)	2
12	00-875341	Ferrule - Ring Guard	2
13	00-875340	Mount - Deflector	1
14	SD-038-19	Self-Tapping Screw 8-18 x 3/8 Hex Washer Hd	3
15	00-875343	Knife Shaft Ring	1
16	00-875355	Deflector - Product	1
*17	00-873784	Cover - Top & Lock Knob Assy. (Incls. Items 3 thru 8)	1
18	00-873830-00006	Cover - Top & Lock Knob Assy. (Incls. Items 2 & 4 thru 8)	1
19	00-873830-00007	Cover - Top & Lock Knob Assy. (Correctional) (Incls. Items 1 & 4 thru 8)	1
20	SC-041-01	Cap Screw 1/4-20 x 3/4 Hex Hd. (SST)	1

* (2612PHS & 2712PHS Only)

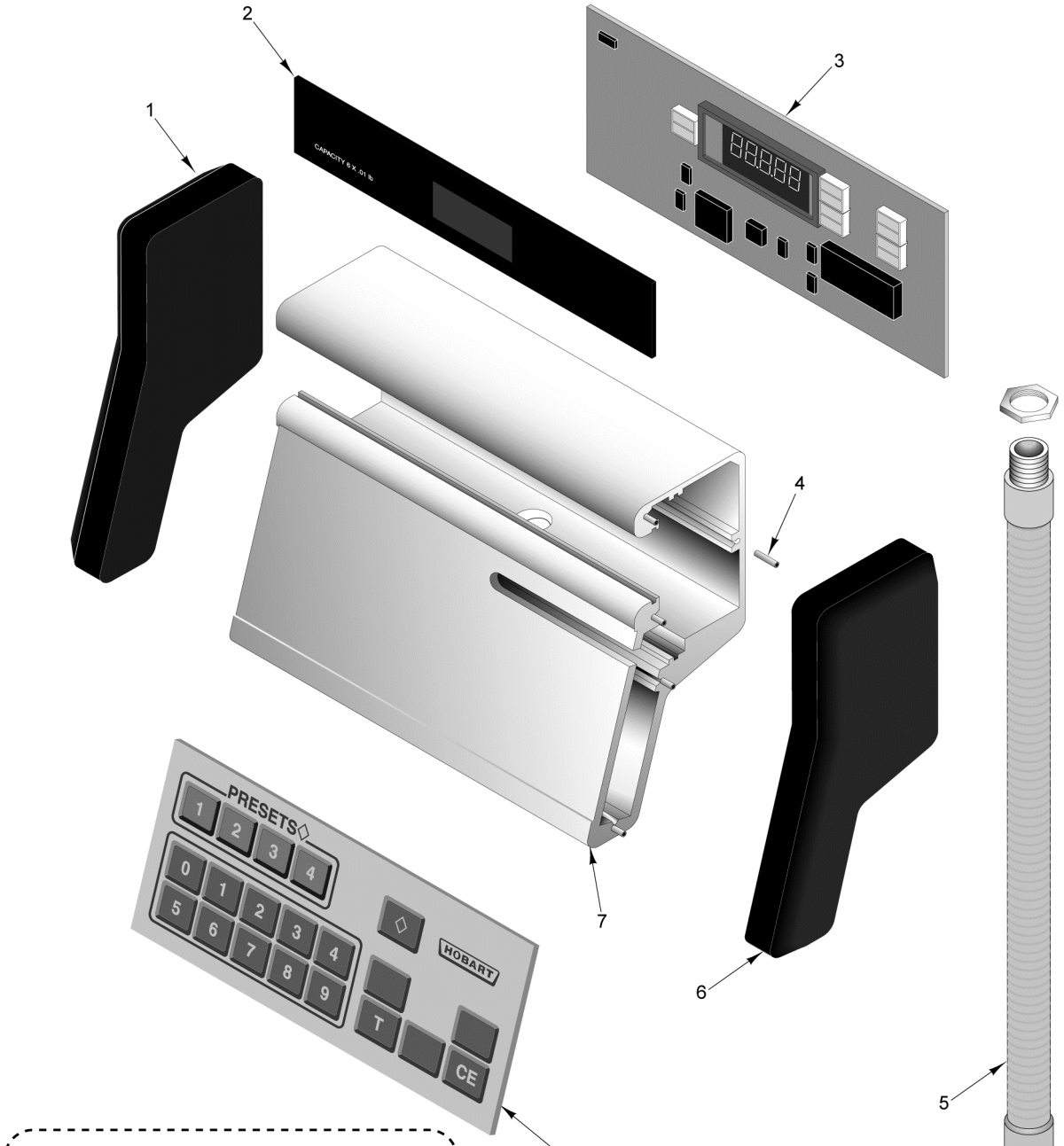

9	00-477227	Scale - PCB Assy.

PART NOT ILLUSTRATED

PL-57006

2812PS	ML-134241
2812PS	ML-136114
2812PS	ML-136169

DISPLAY TOWER ASSEMBLY
(2812PS SERIES)

DISPLAY TOWER ASSEMBLY
(2812PS SERIES)

ILLUS. PL-57006	PART NO.	NAME OF PART	AMT.
1	00-875362	Cap - Left Display End	1
2	00-477803	Filter - Display	1
3	00-477225	Display - PCB Assy	1
4	SC-124-76	Set Screw 6-32 x 1/2 Hdls. Cup Pt	10
5	00-477568	Arm - Flex	1
6	00-875363	Cap - Right Display End	1
7	00-477368	Housing	1
8	00-439058	Keypad - Slicer	1
9	00-477227	Scale - PCB Assy. (2812PS)	1

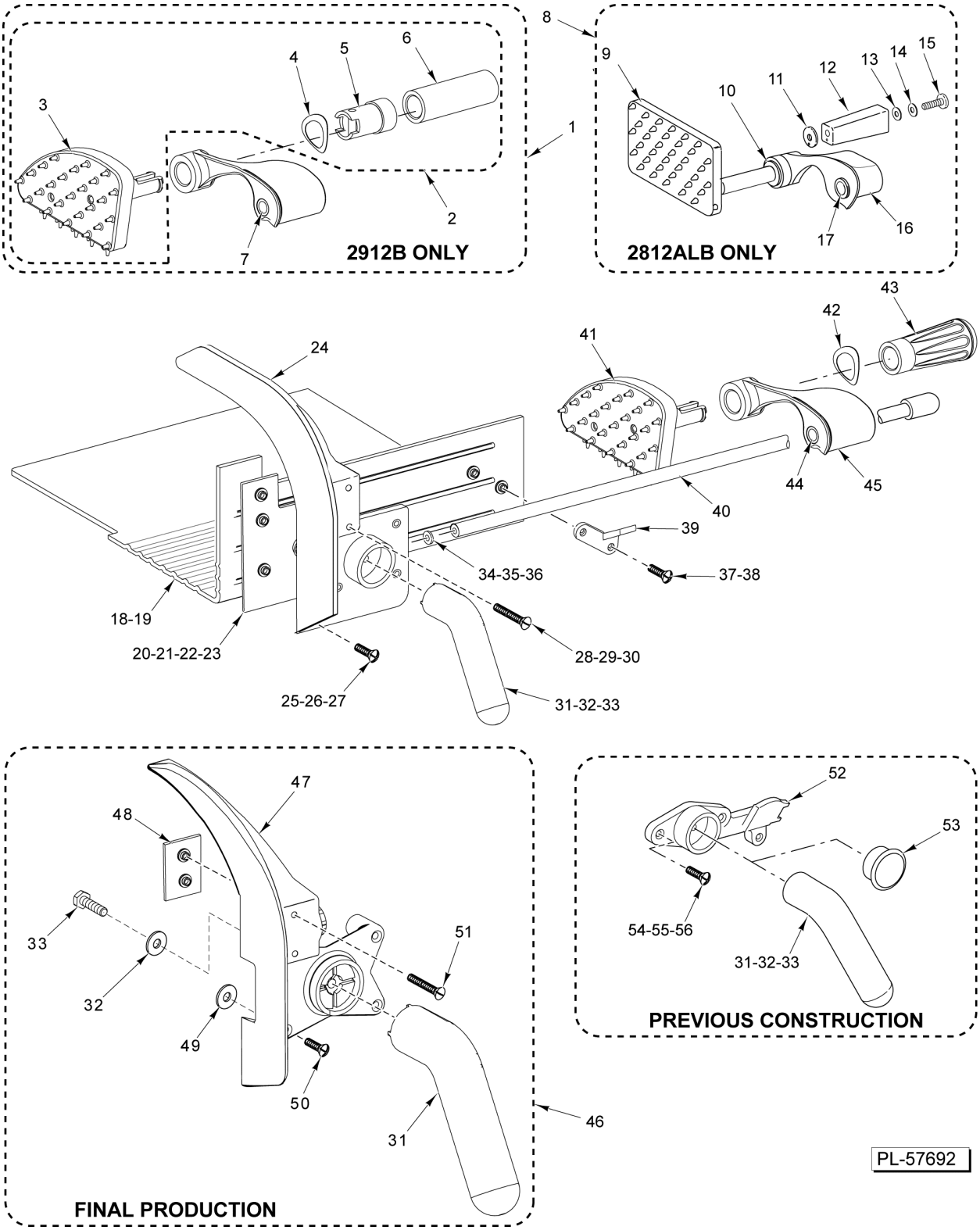

CARRIAGE TRAY

CARRIAGE TRAY

ILLUS. PL-57692	PART NO.	NAME OF PART	AMT.
1	00-915214	Feed Arm Assy. (Incls. Items 2 & 7)	1
2	00-915168	Kit - Handle Assy. (Alum.) (Incls. Items 3 thru 6)	1
3	00-915171	Grip - Product	1
4	00-479463	Washer - Wavy	1
5	00-915170	Handle - Insert Assy	1
6	00-915144	Handle - Feed Grip (Aluminum)	1
7	00-478254	Bushing	2
8	00-437912-00002	Heavy Meat Assy. (2812ALB) (Incls. Items 9 thru 17)	1
9	00-437908	Meat Grip Heavy Subassy. (2812ALB)	1
10	00-438280	Bushing (2812ALB)	1
11	00-437006	Washer - Handle (2812ALB)	1
12	00-070202	Handle - Meat Grip (Non-Metallic) (2812ALB)	1
13	00-070344	Washer - Handle Tension (2812ALB)	1
14	00-070345	Washer - Handle Retaining (2812ALB)	1
15	SC-124-67	Mach. Screw 10-24 x 1/2 Slotted Truss Hd. (2812ALB)	1
16	00-479544-00003	Feed Grip Assy. (Alum.) (Packaged) (2812ALB)	1
17	00-478254	Bushing (2812ALB)	2
18	00-875646-00002	Carriage Tray	1
19	00-873710	Carriage Tray (SST) (Previous Construction) (Use with Item 34)	1
*20		Gasket - Slide Rod Base (No Ribs)	1
*21		Gasket - Slide Rod Base (Ribbed)	1
*22		Kit - Gasket (Ribbed)	1
*23		Kit - Gasket (Smooth)	1
*24		Support Handle & Slide Rod	1
25	SC-126-27	Mach. Screw 8-32 x 3/8 Hex Hd. (SST) (2612PHS & 2712PHS)	3
26	SC-123-09	Mach. Screw Special 8-32 x 3/8 Phil. Oval Hd	3
27	SC-129-06	Mach. Screw 8-32 x 3/8 Tx. Flat Hd. (SST) (2612C, 2712C, 2812C, & 2912C)	3
28	SC-126-28	Mach. Screw 8-32 x 1-1/2 Hex Hd. (SST) (2612PHS & 2712PHS)	2
29	SC-123-10	Mach. Screw 8-32 x 1-1/2 Phil. Oval Hd. (SST)	2
30	SC-128-84	Mach. Screw 8-32 x 1-1/2 Tx. Flat Hd. (SST) (2612C, 2712C, 2812C, & 2912C)	2
31	00-875345	Handle - Carriage	1
32	WS-022-02	Washer 0.266 x 0.688 x 0.062 (SST)	1
33	SC-041-02	Cap Screw 1/4-20 x 1 Hex Hd. (SST)	1
34	WS-030-58	Washer 0.500 x 0.750 x 0.010 (SST)	1
35	WS-021-21	Washer 0.500 x 0.750 x 0.093 (Nylon)	AR
36	WS-021-19	Washer 0.500 x 0.750 x 0.062 (Nylon)	AR
37	SC-123-09	Mach. Screw Special 8-32 x 3/8 Phil. Oval Hd	2
38	SC-129-06	Mach. Screw 8-32 x 3/8 Tx. Flat Hd. (SST) (2612C, 2712C, 2812C, & 2912C)	2
39	00-915028	Hanger - Meat Grip (MicroBan)	1
40	00-875354	Knob & Slide Rod Assy	1
41	00-913067	Kit - Meat Grip (All Except 2812ALB) (Incls. Qty of 3 for Item 35)	1
42	00-479463	Washer - Wavy	1
43	00-875320	Handle - Feed Grip Assy. (All Except 2812ALB)	1
44	00-478254	Bushing	2
45	00-479544-00003	Feed Grip Assy. (Alum.) (Packaged) (Incls. Items 41 thru 44)	1
46	00-915596	Kit - Slide Rod & Handle Support (Incls. Items 31, 32, 33, & 47 thru 51)	1
47	00-915582	Support - Handle & Slide Rod	1
48	00-915586	Gasket - Handle	1
49	00-915649	Gasket	3
50	SC-131-91	Mach. Screw 8-32 x 1	3
51	SC-123-10	Mach. Screw 8-32 x 1-1/2 Phil. Oval Hd. (SST)	2
52	00-875357	Hanger - Meat Grip	1
53	00-875350	Cap - Meat Grip Hanger	1
54	SC-126-27	Mach. Screw 8-32 x 3/8 Hex Hd. (SST) (2612PHS & 2712PHS)	3
55	SC-123-09	Mach. Screw Special 8-32 x 3/8 Phil. Oval Hd	3
56	SC-124-77	Mach. Screw 8-32 x 3/8 Hex Pin Hd. (SST) (2612C, 2712C, 2812C, & 2912C)	3

* (Part No Longer Available, Order Item 46)

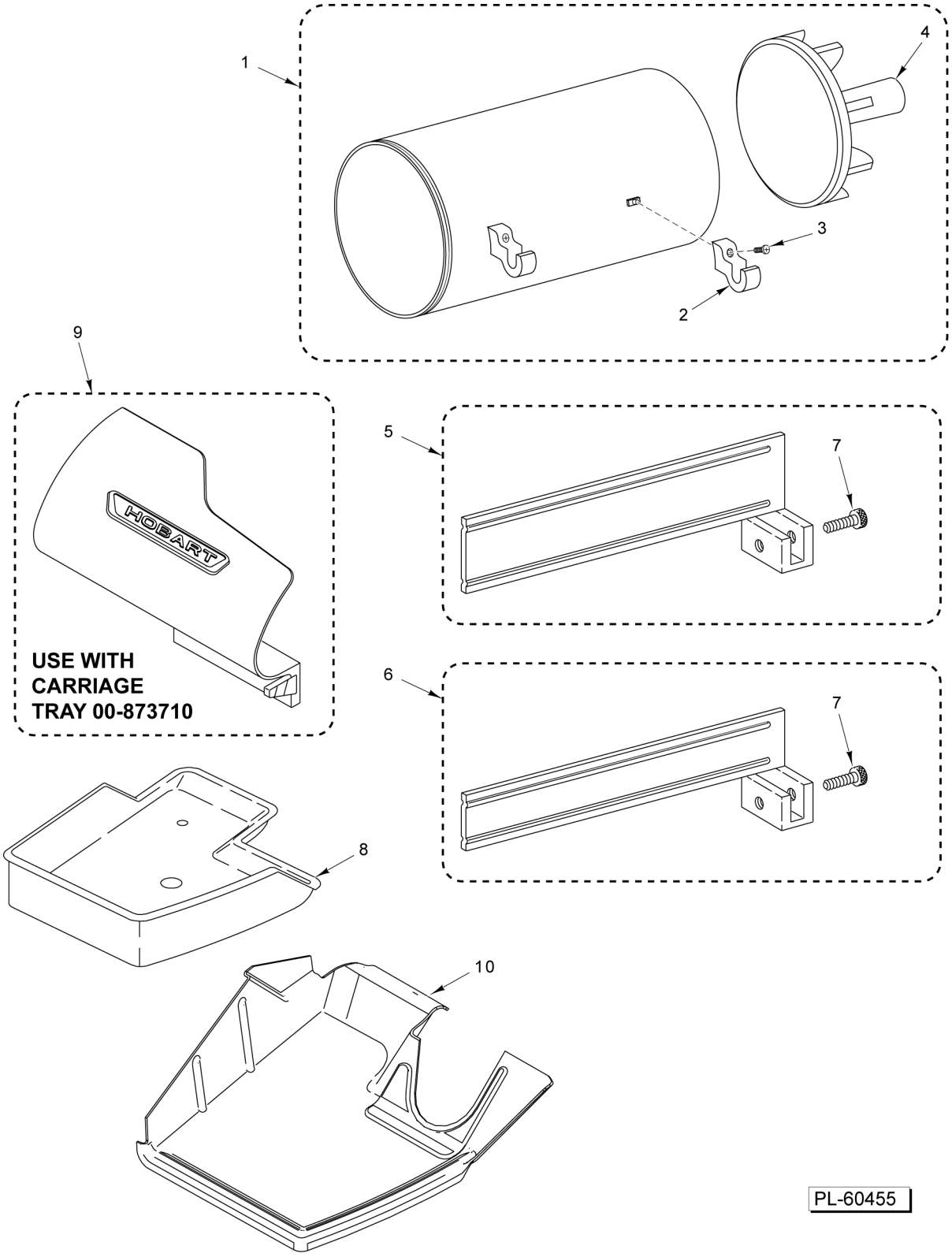

ACCESSORIES

ACCESSORIES

ILLUS. PL-60455	PART NO.	NAME OF PART	AMT.
1	00-873604	Feed Chute Assy. (Incls. Items 2, 3, & 4)	1
2	00-875365	Hanger - Chute (All Except 2812ALB)	2
3	SC-124-41	Mach. Screw Special 8-32 x 5/8 Phil. Oval Hd. (All Except 2812ALB)	2
4	00-075945	Pusher Assy. - Plate	1
5	00-295117	Fence Assy. (High) (3-3/8 In.) (SST) (Packaged)	1
6	00-295118	Fence Assy. (Low) (1-3/4 In.) (SST) (Packaged)	1
7	00-290984	Thumb Screw - Fence	1
8	00-873480	Box - Slaw	1
9	00-875163	Product Shield Assy. (Use with Carriage Tray 00-873710 Only)	1
10	00-915420	Platter (2912B)	1

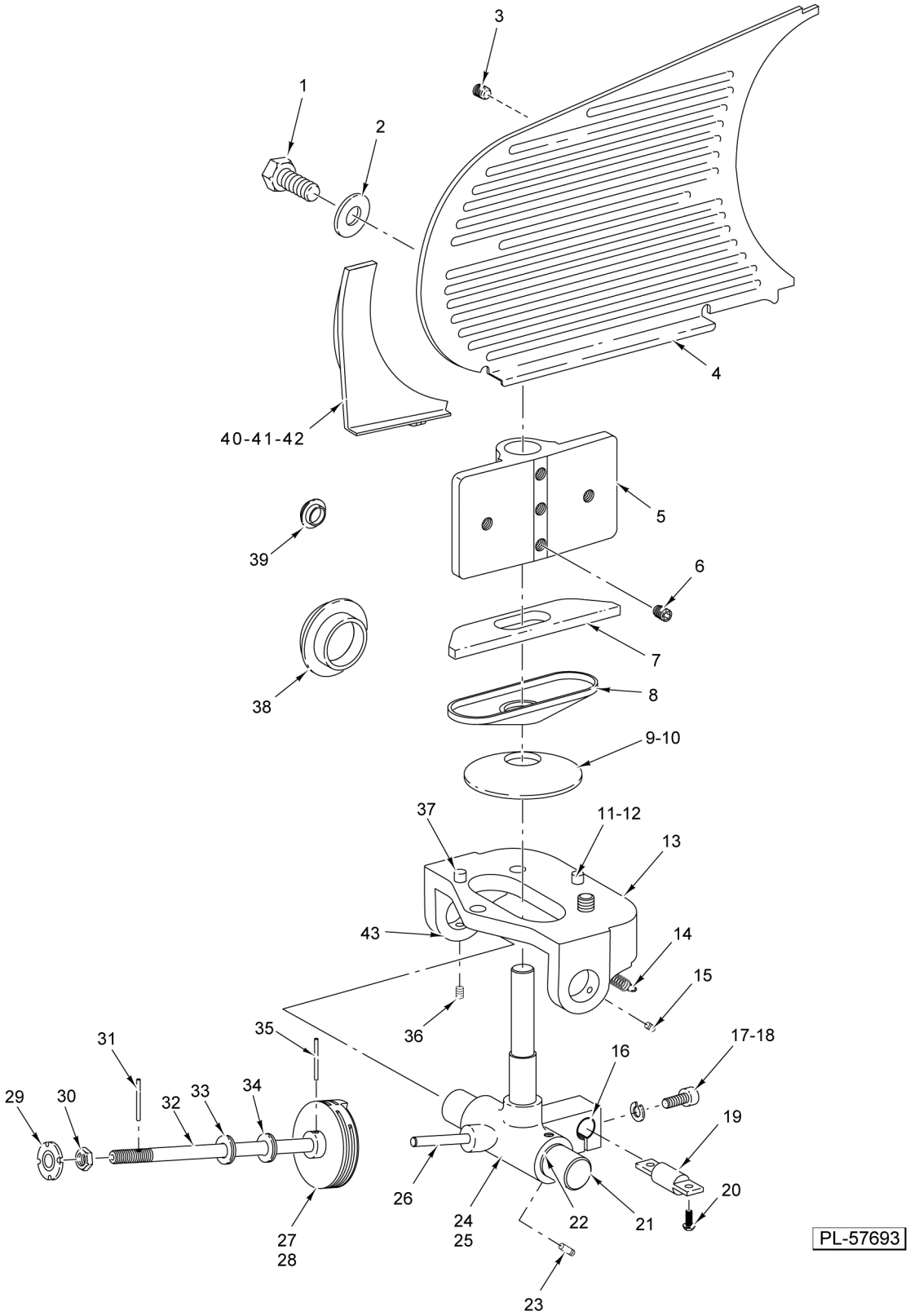

GAUGE PLATE AND INDEX

GAUGE PLATE AND INDEX

ILLUS. PL-57693	PART NO.	NAME OF PART	AMT.
1	SC-041-16	Cap Screw 5/16-18 x 1-3/8 Hex Hd. (SST)	2
2	WS-005-32	Washer (SST)	2
3	SC-123-52	Set Screw 5/16-24 x 5/8 Hdls., Flat Pt	4
4	00-438980-00002	Gauge Plate Assy	1
5	00-439021-00002	Mount - Special	1
6	SC-124-11	Set Screw 5/16-24 x 5/8 Hdls., Cone Pt	3
7	00-875352	Cover - Gauge Plate (Bottom)	1
8	00-875364	Retainer - Cover	1
9	00-875361	Disc - Cover (All Except 2612GC)	1
10	00-914123	Disc - Cover (2612GC)	1
11	SD-038-13	Self-Tapping Screw 5/16-18 x 7/8 Hex Washer Hd., Type RL	3
12	WL-007-20	Lockwasher 5/16 External Shakeproof	3
13	00-439072-00003	Support - Slide Index (Incls. Items 15, 36, & 37) (Order With Item 19)	1
14	00-478432	Spring - Index Backlash	1
15	SC-088-71	Set Screw 8-32 x 3/8 Hdls., Flat Pt	1
16	00-478425	Bushing - Anti-Rotation Rod	1
17	SC-124-46	Cap Screw 10-24 x 3/4 Hex Socket Hd	3
18	WL-008-13	Lockwasher #10 Internal Shakeproof	3
19	00-478415	Rod - Index Anti-Rotation	1
20	SD-038-14	Self-Tapping Screw 1/4-20 x 7/8 Hex Washer Hd., Type RL (SST)	2
21	00-438886	Rod - Index Slide	1
22	00-478426	Bushing - Index Slide	2
23	PG-011-19	Pin - Grooved 5/32 x 1/2 (SST)	1
24	00-478416-00002	Slide - Index Mechanism (Incls. Items 16, 17, 18, 22, 23, & 26)	1
25	00-478416-00003	Slide - Index Mechanism (2612GC) (Incls. Items 16, 17, 18, 22, 23, & 26)	1
26	00-478461	Pin - Index Cam	1
27	00-915335-00002	Cam - Indexing (All Except 2612GC)	1
28	00-914122	Cam - Indexing (2612GC)	1
29	00-076948	Disc - Indexing Drive	1
30	00-010928-00002	Nut - Special	2
31	RP-002-40	Roll Pin 3/32 Dia. x 3/4 Lg	1
32	00-438890	Camshaft	1
33	00-088298	Washer - Belleville	2
34	WS-030-58	Washer 0.500 x 0.750 x 0.010 (SST)	1
35	RP-003-12	Roll Pin 1/8 Dia. x 1-1/4 Lg	1
36	SC-088-71	Set Screw 8-32 x 3/8 Hdls., Flat Pt	2
37	00-011800-00305	Pin - Dowel 1/4 x 3/4	1
38	00-875373	Plug - Hole (Large)	2
39	00-875375	Plug - Hole (Small)	4
40	00-914132	Deflector - Fluid (Pre-Drilled) (2912B)	1
41	00-479499	Deflector - Fluid (Silicone)	1
42	SC-129-13	Mach. Screw 6-32 x 1/4 Phil. Flat Hd. (SST)	3
43	PG-011-38	Pin - Grooved 5/32 x 19/32 (SST) (Incls. Item 13)	1

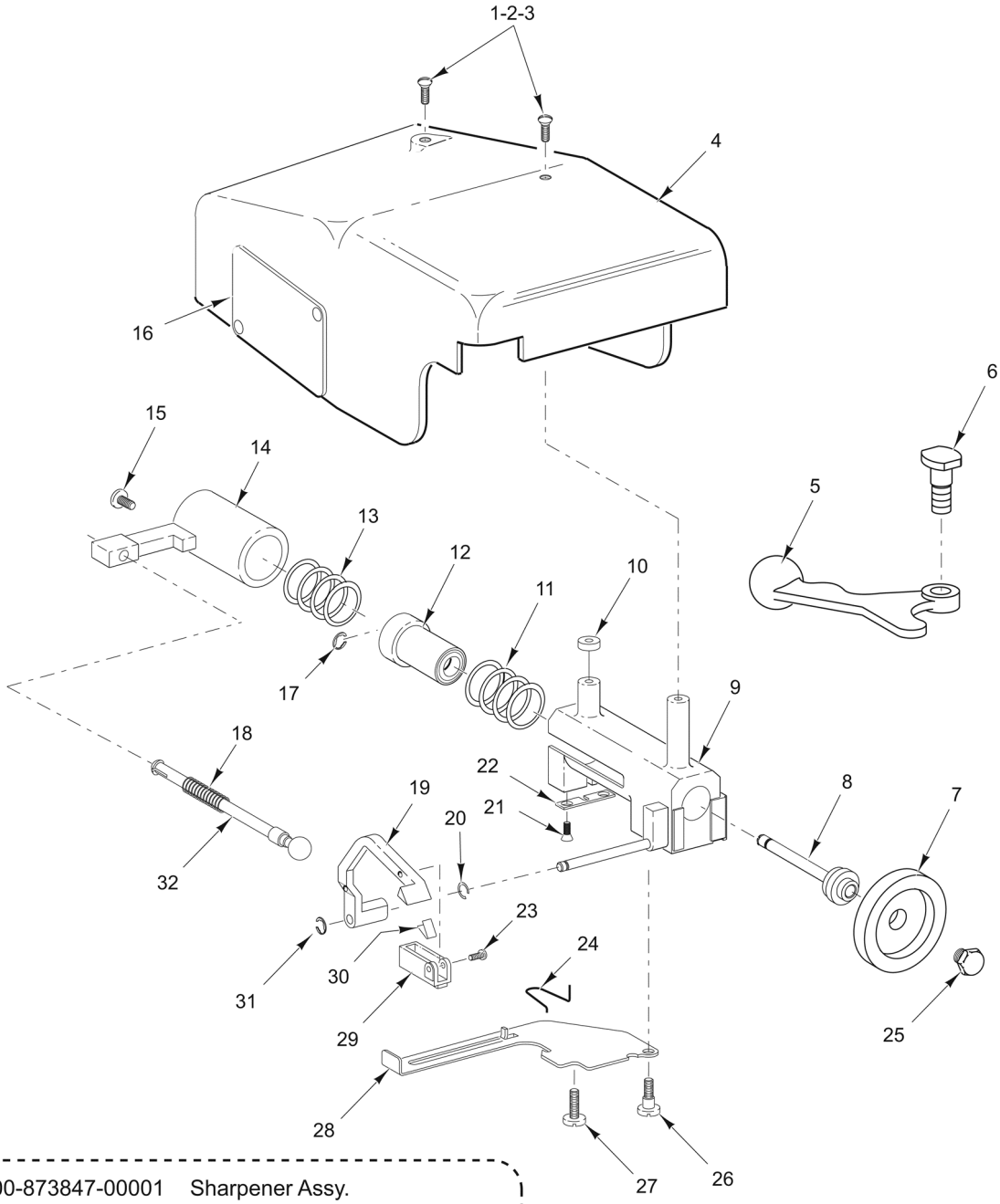

33	00-873847-00001	Sharpener Assy.
34	00-873847-00003	Sharpener Assy. (PHS Series)
35	00-873847-00004	Sharpener Assy. (Correctional)
36	00-875046	Sharpener Assy. (No Stones)

PARTS NOT ILLUSTRATED

PL-57010

KNIFE SHARPENER

KNIFE SHARPENER

ILLUS. PL-57010	PART NO.	NAME OF PART	AMT.
1	SC-067-06	Mach. Screw 10-24 x 1/2 Hex Hd. (2612PHS & 2712PHS)	2
2	SC-129-63	Mach. Screw 10-24 x 1/2 Phil. Truss Hd. (SST)	2
3	SC-129-74	Mach. Screw 10-24 x 1/2 Tx. Button Hd. (SST) (Correctional)	2
4	00-915010	Kit - Plate & Cover Assy.	1
5	00-875359	Handle - Sharpener Cam	1
6	00-479953	Shoulder Screw 1/4-20 x 3/8	1
7	00-439691	Stone Service Kit	1
8	00-873848	Shaft - Grinding Wheel	1
9	00-873852	Housing & Stud Assy.	1
10	00-915162	Spacer	1
11	00-438437	Spring - Return	1
12	00-873851	Plunger - Bearing Assy.	1
13	00-875531	Spring - Main	1
14	00-875339	Actuator	1
15	SC-122-87	Mach. Screw 8-32 x 1/4 Slotted Pan Hd. (SST)	1
16	00-437239	Label - Instruction	1
17	RR-006-22	Retaining Ring 1/4 In. (SST)	1
18	00-438426	Spring - Truing Arm	1
19	00-875367	Arm - Truing	1
20	00-479527	Washer - Spring Crescent Shaped	1
21	SC-122-85	Mach. Screw 4-40 x 1/4 Phil. Flat Hd. (SST)	2
22	00-439700	Plate - Rear Locking	1
23	SC-122-84	Mach. Screw 2-56 x 9/16 Slotted Pan Hd. (SST)	1
24	00-438435	U-Spring (Long End Inserted Into Housing)	1
25	00-435814	Retaining Screw (RH)	1
26	00-438442	Screw - Shoulder Special	1
27	SC-122-87	Mach. Screw 8-32 x 1/4 Slotted Pan Hd. (SST)	1
28	00-439698	Lever - Locking	1
29	00-478747	Stone - Truing	1
30	00-435324	Spring - Truing Stone	2
31	RR-006-22	Retaining Ring 1/4 In. (SST)	1
32	00-875368	Push Rod - Truing	1
33	00-873847-00001	Sharpener Assy. (Incls. Items 2 & 4 thru 32)	1
34	00-873847-00003	Sharpener Assy. (Incls. Items 1 & 4 thru 32) (2612PHS & 2712PHS)	1
35	00-873847-00004	Sharpener Assy. (Incls. Items 3 thru 32) (Correctional)	1
36	00-875046	Sharpener Assy. (No Stones) (Cosmetic) (Incls. Items 3, 4, 9, 14, 21, 22, 26, 27, & 28) (Correctional)	1

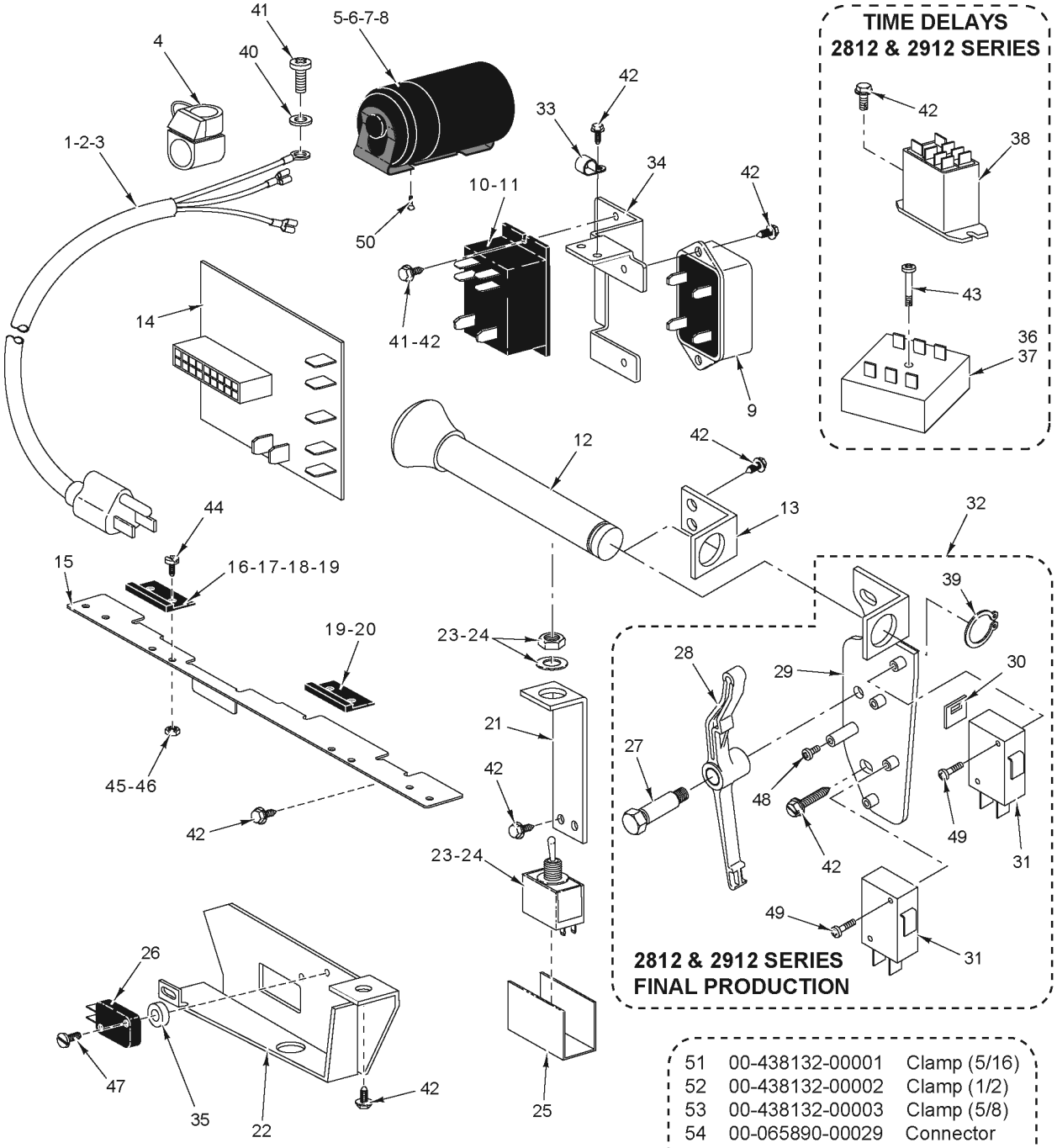

ELECTRICAL UNIT

ELECTRICAL UNIT

ILLUS. PL-60729	PART NO.	NAME OF PART	AMT.
1	00-117542-00095	Cord & Plug Assy. (100/120 V.)	1
2	00-117542-00096	Cord & Plug Assy. (240 V.)	1
3	00-117542-00039	Cord (I.E.C.)	1
4	FE-021-21	Strain Relief (Use With Items 1 & 3)	1
5	00-070486-00001	End Cap - Capacitor	1
6	00-070487-00026	Capacitor - Motor Start	1
7	00-066621-00001	Bracket - Capacitor	1
8	00-875582	Spacer	1
9	00-271612-00002	Switch - Electronic Start (50/60 Hz.)	1
10	00-087714-042-1	Relay (2-Pole) (120 VAC) (30 Amp.)	1
11	00-087714-042-3	Relay (2-Pole) (240 VAC)	1
12	00-875668	Knob - On/Off	1
13	00-439041	Bracket - Switch Rod	1
14	00-873635	PCB Assy. - Knife Motor Control (2912B)	1
15	00-477523	Bracket - Switch (All Except 2612 Series)	1
16	00-087711-00319	Switch - Home Start (2712 Series, 2912, & 2912C)	1
17	00-087711-00276	Switch - Home Start (2812 Series)	1
18	00-087711-00334	Switch - Home Start (2912B)	1
19	00-087711-00336	Switch - Home Start or Slice Count (2912PS)	1
20	00-087711-00264	Switch - Slice Count (2812PS)	1
21	00-439040	Bracket - On/Off Switch	1
22	00-479683	Bracket - Switch	1
23	00-087711-148-1	Switch (With Nuts) (2-Post) (2612 Series & 2712 Series)	1
24	00-875567	Switch Assy. (With Nuts) (3-Position) (2812 Series & 2912 Series Previous Construction)	1
25	00-873803	Switch - Mylar	1
26	00-087711-00349	Switch (Start/Pause) Switch (Snap Action) (2812 Series & 2912 Series)	AR
27	00-914231	Standoff - Pivot Arm	1
28	00-873664	Arm - Switch Pivot	1
29	00-875700-00002	Plate - Mounting	1
30	00-914129	Pad - Dampening	1
31	00-087711-00349	Switch (Stop & Start/Pause)	2
32	00-875744	Kit - Start/Stop/Pause Switch (2812 Series & 2912 Series) (Incls. Items 27 thru 31, 39, 42, 48, & 49)	1
33	00-078752-00012	Clamp - Cable	1
34	00-438929	Bracket - Motor Start Switch	1
35	00-478427	Spacer - Nylon (2812 Series & 2912 Series)	2
36	00-087714-069-1	Timer - Relay (115 V.) (2812, 2812CB, 2812PS, 2812ALB, & 2912 Series) (If Equipped)	1
37	00-087714-069-2	Timer - Relay (230 V.) (2812 & 2912PS Series) (If Equipped)	1
38	00-087714-00063	Relay (115 V.) (2812 ML-136110 & 2812PS ML-136114)	2
39	RR-009-03	Retaining Ring	1
40	WL-010-01	Lockwasher #8 External Shakeproof	1
41	SD-015-41	Self-Tapping Screw 8-32 x 1/2 Phil. Pan Hd., Type TT	AR
42	SD-038-16	Self-Tapping Screw 6-32 x 3/8 Hex Washer Hd., Type RL	AR
43	SD-037-95	Self-Tapping Screw 10-24 x 1 Phil. Pan Hd., Type T	1
44	SC-120-97	Mach. Screw 4-40 x 3/8 Slotted Flat Hd. (SST) (All Except 2612 Series)	2
45	WL-006-43	Lockwasher #4 Helical (SST)	2
46	NS-011-01	Nut 4-40 Hex (SST)	2
47	SC-060-40	Mach. Screw 4-40 x 5/8 Slotted Rd. Hd. (2812 Series & 2912 Series)	2
48	SC-129-23	Mach. Screw 4-40 x 1/4 Phil. Pan Hd	1
49	SC-122-53	Mach. Screw 4-40 x 5/8 Phil. Pan Hd. (SST)	2
50	SD-024-16	Self-Tapping Screw 10-24 x 1/2 Phil. Flat Hd., Type TT	1
51	00-438132-00001	Clamp - P (5/16)	AR
52	00-438132-00002	Clamp - P (1/2)	AR
53	00-438132-00003	Clamp - P (5/8)	AR
54	00-065890-00029	Connector - Insulated	2

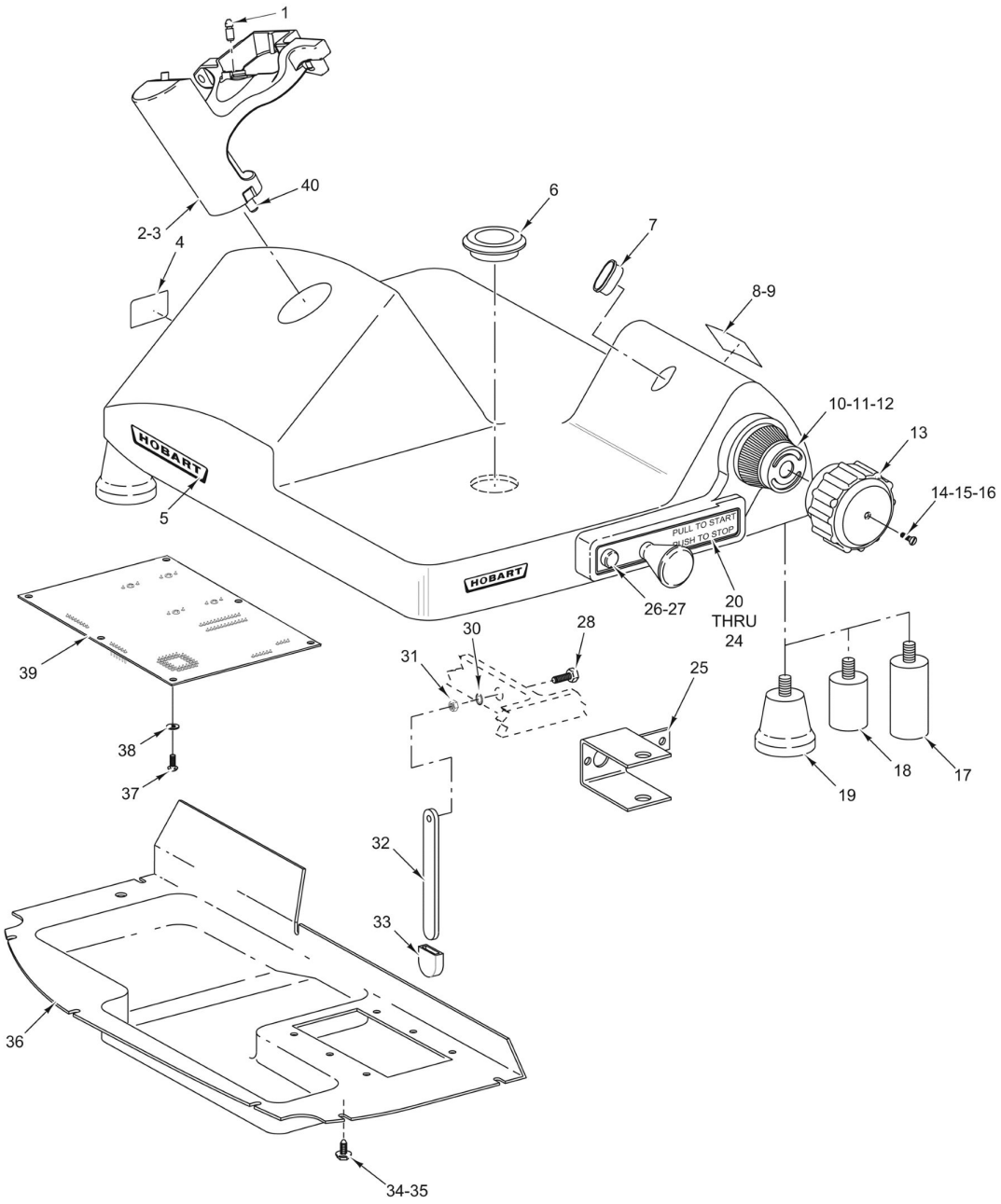

2612	ML-134231	**2812**	ML-134239	**2812**	ML-104617	**2812CB**	ML-136141
2612C	ML-134233	**2812**	ML-136110	**2812**	ML-136164	**2812PS**	ML-136114
2612GC	ML-136100	**2812**	ML-136112	**2812**	ML-136167	**2812PS**	ML-134241
2612PHS	ML-134234	**2812**	ML-104616	**2812C**	ML-134244	**2812PS**	ML-136169
		2812	ML-136168			**2812ALB**	ML-134243

PL-57004

BASE UNIT
(2612 & 2812 SERIES)

BASE UNIT
(2612 & 2812 SERIES)

ILLUS. PL-57004	PART NO.	NAME OF PART	AMT.
1	00-873733	Pin - Lock	1
2	00-479636-00005	Mount - Sharpener Housing	1
3	SD-038-13	Self-Tapping Screw 5/16-18 x 7/8 Hex Washer Hd., Type RL	2
4	00-438131-061-2	Label - Warning	1
5	00-477739	Logo - Hobart (Large)	1
6	00-479033	Nut - Hump (2812PS)	1
7	00-875347	Ring - Drip	1
8	00-438131-054-2	Label - Warning	1
9	00-121676-00001	Self-Tapping Screw #2 x 1/4 Truss Hd	2
10	00-875370	Dial Assy. (All Except 2812CB)	1
11	00-875370-00002	Dial Assy. (2812CB)	1
12	00-077629	Bushing	1
13	00-875348	Knob - Indexing	1
14	SC-126-30	Mach. Screw 10-24 x 3/4 Hex Hd. (SST) (2612PHS)	1
15	SC-023-10	Mach. Screw 10-24 x 3/4 Slotted Oval Hd. (SST)	1
16	SC-121-95	Mach. Screw 10-24 x 5/8 Hex Pin Hd. (SST) (2612C & 2812C)	1
17	00-477773	Leg Set (4 In.) (Packaged)	1
18	00-873766	Leg Set (3 In.) (Packaged)	1
19	00-875371	Foot - Tall	4
20	00-875349	Bezel - Index	1
21	00-479745	Bezel - Index (2612C & 2812C)	1
22	SD-038-21	Self-Tapping Screw 8-32 x 1-1/4 Phil. Pan Hd., Type TT	2
23	SD-038-20	Self-Tapping Screw 8-32 x 1 Phil. Flat Hd., Type TT	2
24	00-477735	Label - Start/Stop	1
25	00-479655	Lock Bracket (2612C & 2812C)	1
26	00-439042-00001	Lamp (125 V.)	1
27	00-439042-00002	Lamp (250 V.)	1
28	SC-041-02	Cap Screw 1/4-20 x 1 Hex Hd. (SST)	1
29	00-477740	Logo - Hobart (Small)	2
30	WL-014-10	Lockwasher 1/4 External Shakeproof	1
31	NS-015-01	Nut 1/4-20 Hex (SST)	1
32	00-437865	Leg - Cleaning	1
33	00-478023	Cap - Lift Leg	1
34	SD-038-76	Self-Tapping Screw 6-32 x 3/8 Hex Washer Hd., Type RL (2612PHS)	11
35	SD-038-16	Self-Tapping Screw 6-32 x 3/8 Hex Washer Hd., Type RL	11
36	00-873738	Cover - Bottom	1
37	SD-038-16	Self-Tapping Screw 6-32 x 3/8 Hex Washer Hd., Type RL (2812PS)	6
38	WL-019-32	Lockwasher #6 External (2812PS)	6
39	00-477227	Scale - PCB Assy. (2812PS)	1
40	00-011800-00242	Dowel	2

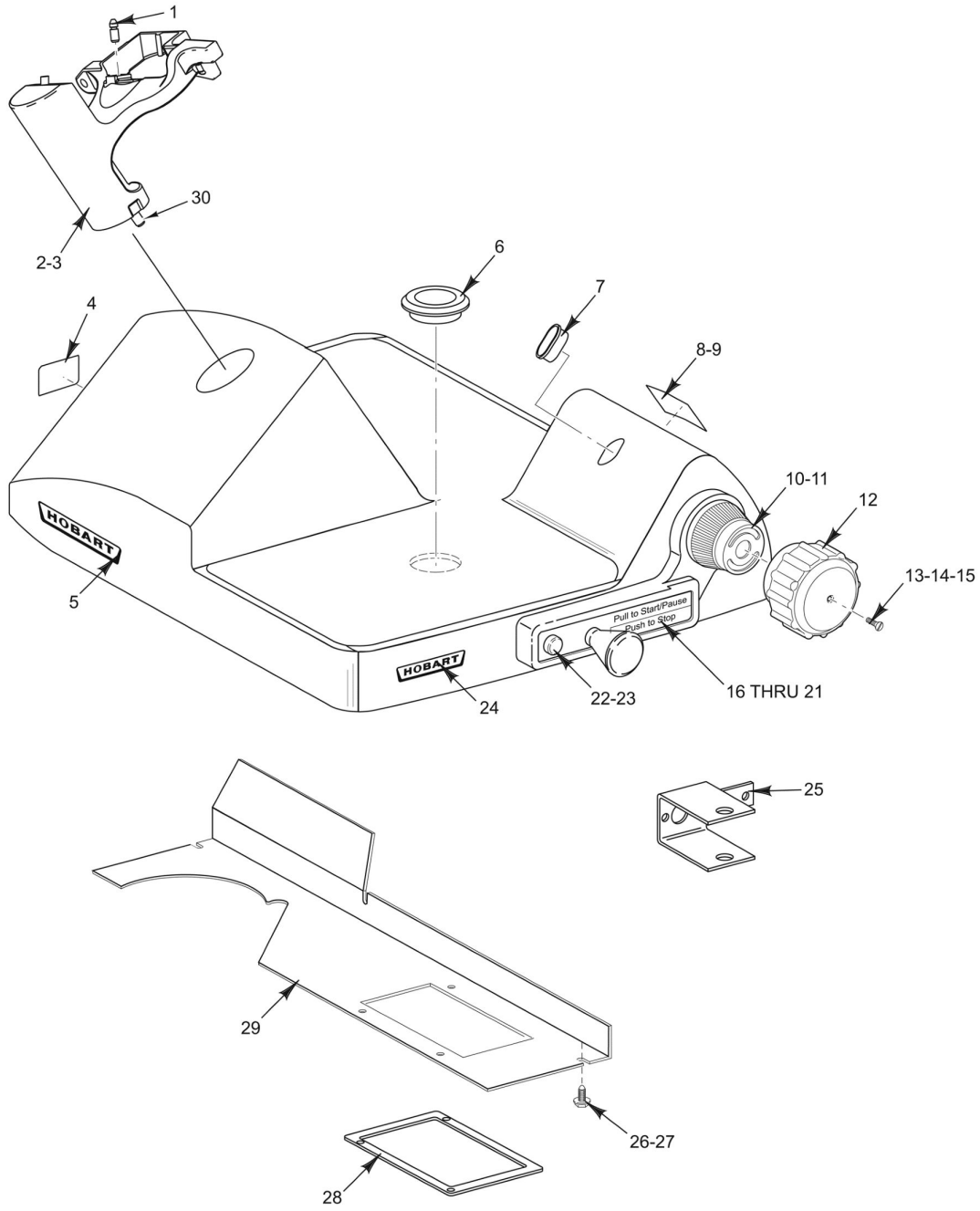

2712	ML-104822	**2912**	ML-134245	**2912**	ML-136154	**2912PS**	ML-134247
2712	ML-134235	**2912**	ML-136111	**2912**	ML-136188	**2912PS**	ML-136175
2712C	ML-134237	**2912**	ML-136113	**2912**	ML-136189	**2912C**	ML-134248
2712PHS	ML-134238	**2912**	ML-136153	**2912**	ML-104996	**2912C**	ML-136174
						2912B	ML-134251

PL-57014

BASE UNIT
(2712 & 2912 SERIES)

BASE UNIT
(2712 & 2912 SERIES)

ILLUS. PL-57014	PART NO.	NAME OF PART	AMT.
1	00-873733	Pin - Lock	1
2	00-479636-00005	Mount - Sharpener Housing	1
3	SD-038-13	Self-Tapping Screw 5/16-18 x 7/8 Hex Washer Hd., Type RL	2
4	00-438131-061-2	Label - Warning	1
5	00-477739	Logo - Hobart (Large)	1
6	00-479033	Nut - Hump (2912PS)	1
7	00-875347	Ring - Drip	1
8	00-438131-054-2	Label - Warning	1
9	00-121676-00001	Self-Tapping Screw #2 x 1/4 Truss Hd	2
10	00-875370	Dial Assy	1
11	00-077629	Bushing	1
12	00-875348	Knob - Indexing	1
13	SC-126-30	Mach. Screw 10-24 x 3/4 Hex Hd. (SST) (2712PHS)	1
14	SC-023-10	Mach. Screw 10-24 x 3/4 Slotted Oval Hd. (SST)	1
15	SC-121-95	Mach. Screw 10-24 x 5/8 Hex Pin Hd. (SST) (2712C & 2912C)	1
16	00-477735	Label - Start/Stop (2712, 2712C, 2912, 2912C, & 2912PS)	1
17	00-873623	Label - Start/Stop/Pause (2912B)	1
18	00-875349	Bezel - Index (2712, 2912, & 2912PS)	1
19	00-479745	Bezel - Index (2712C & 2912C)	1
20	SD-038-21	Self-Tapping Screw 8-32 x 1-1/4 Phil. Pan Hd., Type TT	2
21	SD-038-20	Self-Tapping Screw 8-32 x 1 Phil. Flat Hd., Type TT	2
22	00-439042-00001	Lamp (125 V.)	1
23	00-439042-00002	Lamp (250 V.)	1
24	00-477740	Logo - Hobart (Small)	2
25	00-479655	Bracket - Lock (2712C & 2912C)	1
26	SD-038-76	Self-Tapping Screw 6-32 x 3/8 Hex Washer Hd., Type RL (2712PHS)	5
27	SD-038-16	Self-Tapping Screw 6-32 x 3/8 Hex Washer Hd., Type RL	5
28	00-479680	Gasket - Chute (2912PS)	1
29	00-478036	Cover - Upper Electrical	1
30	00-011800-00242	Dowel	2

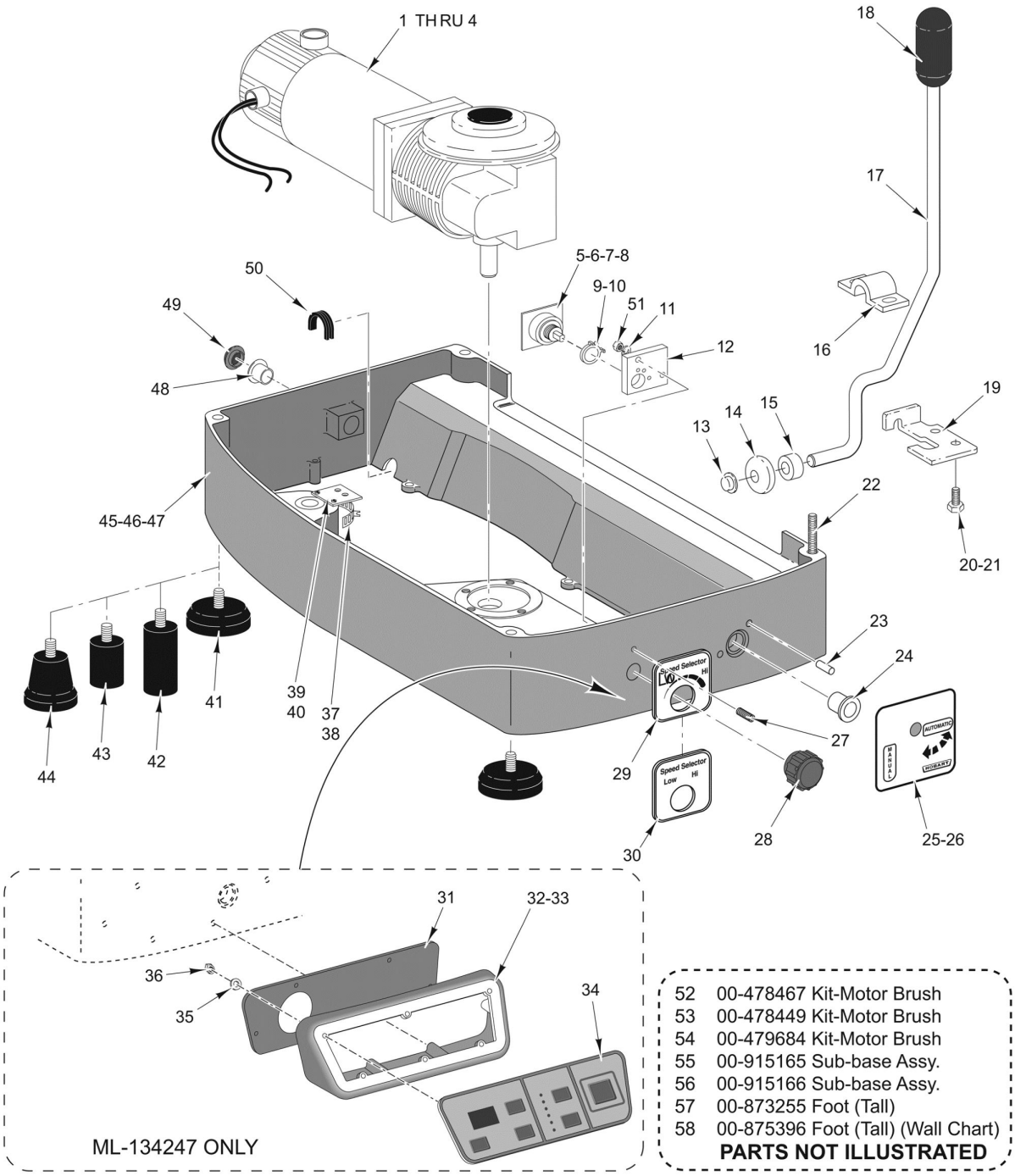

2712	ML-104822	**2912**	ML-134245	**2912**	ML-136154	**2912PS**	ML-134247
2712	ML-134235	**2912**	ML-136111	**2912**	ML-136188	**2912PS**	ML-136175
2712C	ML-134237	**2912**	ML-136113	**2912**	ML-136189	**2912C**	ML-134248
2712PHS	ML-134238	**2912**	ML-136153	**2912**	ML-104996	**2912C**	ML-136174
						2912B	ML-134251

PL-57000

AUTOMATIC BASE UNIT

AUTOMATIC BASE UNIT

ILLUS. PL-57000	PART NO.	NAME OF PART	AMT.
1	SC-040-53	Cap Screw 10-24 x 7/8 Hex Socket Hd	4
2	WL-006-07	Lockwasher #10 Helical (SST)	4
3	00-479531	Motor (115 V. Machines) (90 VDC)	1
4	00-873654	Motor (230 V. Machines) (180 VDC)	1
5	00-873230	Potentiometer Kit Assy. (2912 & 2912C) (2-Wire)	1
6	00-478383	Switch Assy. (2712, 2712C, & 2712PHS)	1
7	00-873630	PCB Assy. - Carriage Speed (2912B)	1
8	00-873231	Kit - Potentiometer Assy. (3-Wire) (2912 & 2912C)	1
9	00-873236	Stop - Two-Speed Slicer Stop - Multi-Speed Slicer (2912 & 2912C)	1
10	00-873235	Stop - Two-Speed Control (2712, 2712C, & 2712PHS)	1
11	WL-006-01	Lockwasher #8 Helical (SST) (All Except 2912PS)	2
12	00-873234	Bracket - Speed Control (All Except 2912PS)	1
13	00-106502	Push Nut	1
14	00-108001	Foot - Lifting Lever	1
15	00-478299	Spacer - Lift Lever	1
16	00-875366	Bearing - Lift Lever	1
17	00-873700	Lever - Lifting Assy. (Incls. Items 13, 14, 15, & 18)	1
18	00-875356	Handle - Lift Lever	1
19	00-875220	Retainer - Lift Lever	1
20	SD-009-16	Self-Tapping Screw 1/4-20 x 3/4 Hex Hd., Type F	2
21	SD-038-77	Self-Tapping Screw 1/4-20 x 3/4 Hex Hd., Type F (2712PHS)	2
22	SC-125-16	Cap Screw 5/16-18 x 5-1/4 Hex Hd	4
23	00-478409	Pin - Auto/Manual Stop 1/4 x 1	2
24	00-478039	Bearing - Carrier Shaft	1
25	00-479288	Label - Auto/Manual (Domestic) (2912PS & 2912B)	1
26	00-478274	Label - Auto/Manual (Domestic) (2712, 2712C, 2712PHS, 2912, & 2912C)	1
27	SC-055-23	Set Screw 8-32 x 5/8 Hex Hdls., Cup Pt. (SST) (All Except 2912PS)	2
28	00-875358	Knob Assy. - Speed Control (All Except 2912PS)	1
29	00-478265	Label - Speed Select (Domestic) (2912 & 2912C)	1
30	00-478296	Label - Speed Select (Domestic) (2712, 2712C, & 2712PHS)	1
31	00-875143	Gasket - Bezel (2912PS)	1
32	00-873506-00002	Bezel (2912PS)	1
33	SD-038-53	Self-Tapping Screw 6-32 x 5/8 Hex Washer Hd., Type RL (2912PS)	6
34	00-479614	Keypad - Scale (2912PS)	1
35	WL-006-40	Lockwasher #6 Light (2912PS)	6
36	NS-011-07	Nut 6-32 Hex (SST) (2912PS)	6
37	00-873638	Vane - Sensor (2912B)	1
38	SC-118-55	Mach. Screw M3 x 0.5 x 8mm Slotted Pan Hd. (SST) (For PCB.)	1
39	00-873641	PCB Assy. - Speed/Position Sensor (2912B)	1
40	SC-118-55	Mach. Screw M3 x 0.5 x 8mm Slotted Pan Hd. (SST) (For PCB.) (For Vane)	1
41	00-875372	Foot (Short)	4
42	00-478275	Kit - Leg Set (4 In.)	1
43	00-873727	Leg Set (3 In.)	1
44	00-875371	Foot - Tall	4
45	00-873698-00002	Base - Automatic (Painted) (All Except 2712PHS & 2912PS)	1
46	00-873698-00003	Base - Automatic (Painted) (2912PS)	1
47	00-873698-00004	Base - Automatic (Polished Aluminum) (2712PHS)	1
48	00-478039	Bearing - Carrier Shaft	1
49	00-875373	Plug - Hole (Large)	1
50	00-478441	Grommet - Electric	2
51	NS-011-12	Stop Nut 8-32 (SST) (All Except 2912PS)	2
52	00-478467	Kit - Motor Brush (Bodine Motor) (Incls. 2 Brushes)	2
53	00-478449	Kit - Motor Brush (Bison Motor) (Incls. 1 Brush)	1
54	00-479684	Kit - Motor Brush (Worldport Motor) (Turdan) (Incls. 1 Brush)	1
*55	00-915165	Sub-base Assy. (Painted) (Incls. Items 5, 9, 11, 12, 23, 24, 26 thru 29, 41, 45, & 48 thru 51) (2912)	1
*56	00-915166	Sub-base Assy. (Burnished) (Incls. Items 5, 9, 11, 12, 23, 24, 26 thru 29, 41, & 47 thru 51) (2912)	1
57	00-873255	Tall Foot & Skid Plate Assy. (2912B)	1
58	00-875396	Tall Foot & Skid Plate Assy. (With Wall Chart) (2912B)	1

* (Additional items included in this assembly are listed in Auto Carrier Unit.)

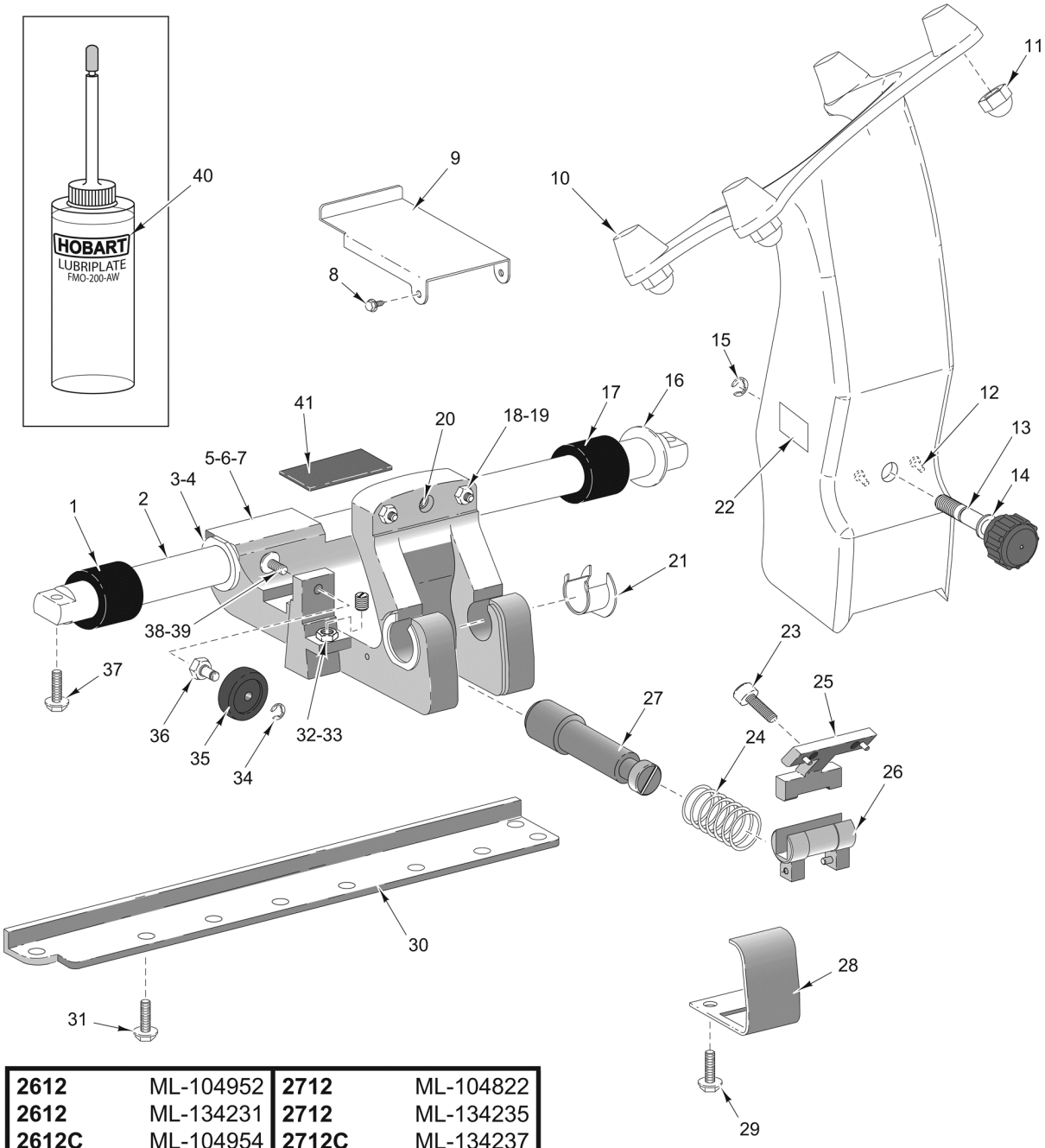

2612	ML-104952	**2712**	ML-104822
2612	ML-134231	**2712**	ML-134235
2612C	ML-104954	**2712C**	ML-134237
2612C	ML-134233	**2712PHS**	ML-134238
2612GC	ML-136100		
2612PHS	ML-104968		
2612PHS	ML-134234		

TRANSPORT CARRIER
(2612 & 2712 SERIES)

TRANSPORT CARRIER
(2612 & 2712 SERIES)

ILLUS. PL-57013	PART NO.	NAME OF PART	AMT.
1	00-477555	Bumper - Slide Rod	1
2	00-438907	Slide - Rod	1
3	00-875658	Bearing - Transport	2
4	00-439007	Bearing - Transport (Nylon)	1
5	00-875659	Transport - Carriage	6
6	00-875374	Plug - Transport Hole	6
7	00-439064	Magnet - Transport	1
8	SD-038-16	Self-Tapping Screw 6-32 x 3/8 Hex Washer Hd., Type RL	2
9	00-478424	Cover - Interlock	1
10	00-479676-00002	Support - Tray Assy	1
11	00-913102-00090	Washer & Crown Nut 1/4-20	4
12	00-439045	Stud - Drive	2
13	00-875450	Knob - Support Tray Assy	1
14	00-478021	Washer - Belleville	2
15	RR-012-17	Retaining Ring	1
16	00-435708	Washer - Backup (SST)	2
17	00-477555	Bumper - Slide Rod	1
18	SC-128-35	Set Screw 5/16-18 x 1 Slotted Hdls., Flat Pt	2
19	NS-018-06	Jam Nut 5/16-18 Hex (SST)	2
20	00-519826	Insert - Screw	1
21	00-439006	Bearing - Pivot	2
22	00-477733	Label - Start (Home) (2712, 2712C, & 2712PHS)	1
23	SC-123-08	Cap Screw 1/4-20 x 5/8 Hex Socket Hd. (SST)	2
24	00-438902	Spring - Interlock Bar	1
25	00-873535-00002	Plate - Key	1
26	00-873534-00002	Pivot - Tiltable Carrier	1
27	00-875445	Shaft - Pivot Return	1
28	00-438900	Cover - Transport	1
29	SD-038-16	Self-Tapping Screw 6-32 x 3/8 Hex Washer Hd., Type RL	2
30	00-438908	Bar - Transport Roller	1
31	SD-038-22	Self-Tapping Screw 10-24 x 1/2 Hex Washer Hd., Type RL	4
32	00-477747	Set Screw - Special	1
33	NS-017-20	Jam Nut 3/8-24 Hex	1
34	RR-006-23	Retaining Ring	1
35	00-478420	Roller - Transport	1
36	00-438911	Screw - Adjusting	1
37	SD-033-08	Self-Tapping Screw 5/16-18 x 1 Hex Washer Hd., Type TT	2
38	WS-003-49	Washer 0.266 x 0.563 x 0.062 (SST)	1
39	SC-123-56	Mach. Screw 1/4-28 x 1/2 Hex Button Hd. (SST)	1
40	00-437906	Bottle - Oil and Label Assy	1
41	00-439017	Wick - Slide Rod Lubrication	1

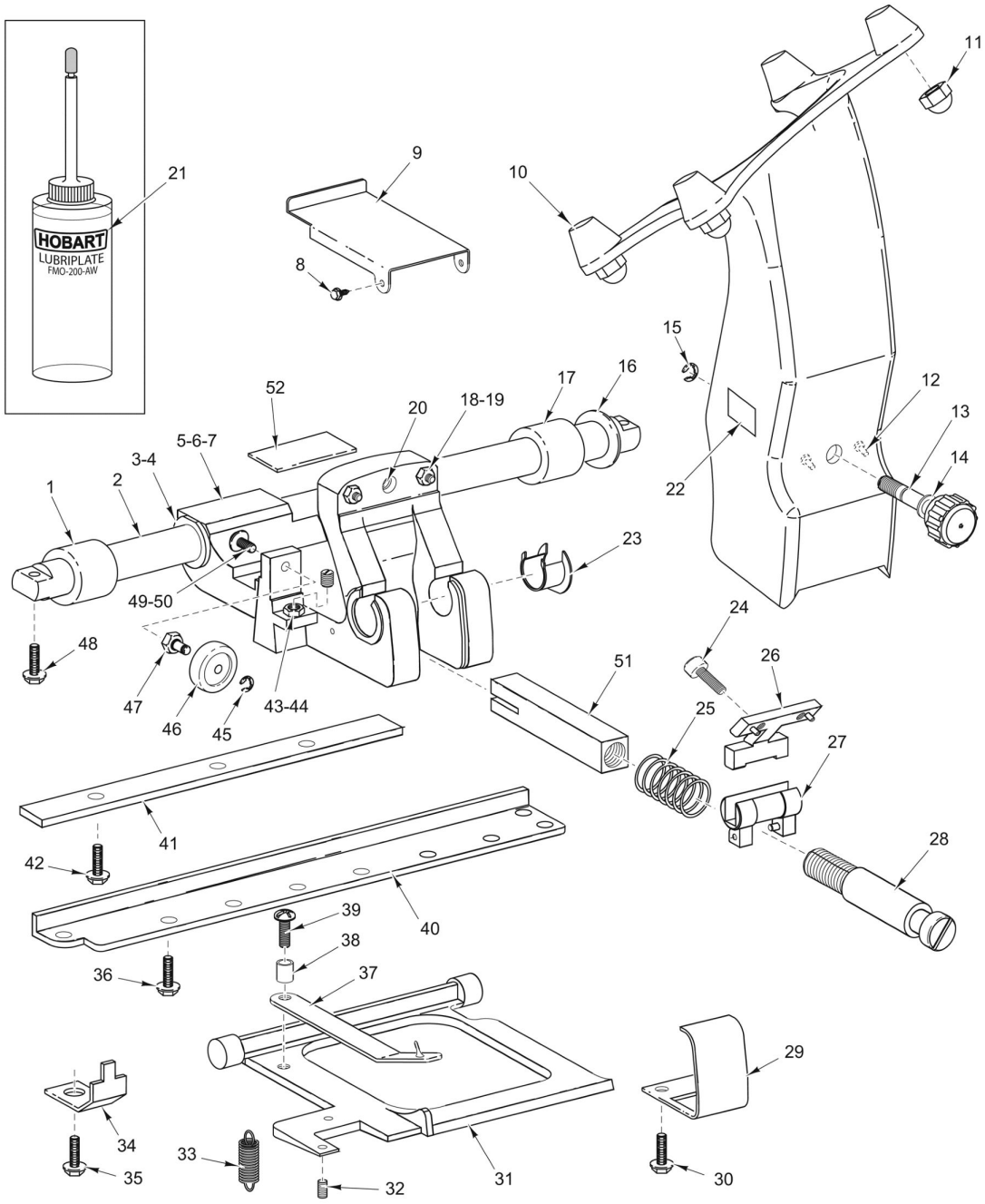

2812	ML-134239	**2812PS**	ML-136167	**2912**	ML-134245	**2912**	ML-104996
2812	ML-136110	**2812PS**	ML-136169	**2912**	ML-136111	**2912PS**	ML-134247
2812	ML-136112	**2812ALB**	ML-136164	**2912**	ML-136113	**2912PS**	ML-136175
2812	ML-104616	**2812ALB**	ML-134243	**2912**	ML-136153	**2912C**	ML-134248
2812	ML-104617	**2812C**	ML-134244	**2912**	ML-136154	**2912C**	ML-136174
2812PS	ML-134241	**2812C**	ML-136168	**2912**	ML-136188	**2912B**	ML-134251
2812PS	ML-136114	**2812CB**	ML-136141	**2912**	ML-136189		

PL-57087

TRANSPORT CARRIER
(2812 & 2912 SERIES)

TRANSPORT CARRIER
(2812 & 2912 SERIES)

ILLUS. PL-57087	PART NO.	NAME OF PART	AMT.
1	00-477555	Bumper - Slide Rod	1
2	00-438907	Slide - Rod	1
3	00-875658	Bearing - Transport	2
4	00-439007	Bearing - Transport (Nylon)	AR
5	00-875659	Transport - Carriage	1
6	00-875374	Plug - Transport Hole	6
7	00-439064	Magnet - Transport	1
8	SD-038-16	Self-Tapping Screw 6-32 x 3/8 Hex Washer Hd., Type RL	2
9	00-478424	Cover - Interlock	1
10	00-479676-00001	Support - Tray Assy	1
11	00-913102-00090	Washer & Crown Nut 1/4-20	4
12	00-439045	Stud - Drive	2
13	00-875450	Knob - Support Tray Assy	1
14	00-478021	Washer - Belleville	2
15	RR-012-17	Retaining Ring	1
16	00-435708	Washer - Backup (SST)	2
17	00-477555	Bumper - Slide Rod	1
18	SC-128-35	Set Screw 5/16-18 x 1 Slotted Hdls., Flat Pt	2
19	NS-018-06	Jam Nut 5/16-18 Hex (SST)	2
20	00-519826	Insert - Screw	1
21	00-437906	Bottle - Oil and Label Assy	1
22	00-477733	Label - Start (Home)	1
23	00-439006	Bearing - Pivot	2
24	SC-123-08	Cap Screw 1/4-20 x 5/8 Hex Socket Hd. (SST)	2
25	00-438902	Spring - Interlock Bar	1
26	00-873535-00002	Plate - Key	1
27	00-873534-00002	Pivot - Tiltable Carrier	1
28	00-438903	Shaft - Interlock Bar	1
29	00-438900	Cover - Transport	1
30	SD-038-16	Self-Tapping Screw 6-32 x 3/8 Hex Washer Hd., Type RL	2
31	00-479682-00002	Plate - Pivoting Interlock	1
32	SC-125-12	Set Screw 1/4-28 x 5/8 Hex Hdls., Cup Pt. (SST)	1
33	00-438897	Spring - Plate Pivoting	1
34	00-438896	Clip - Plate Pivoting	2
35	SD-038-22	Self-Tapping Screw 10-24 x 1/2 Hex Washer Hd., Type RL	2
36	SD-038-22	Self-Tapping Screw 10-24 x 1/2 Hex Washer Hd., Type RL	4
37	00-478421	Follower - Interlock Plate	1
38	00-477749	Bushing - Follower & Wick Cover	1
39	SC-123-07	Mach. Screw 8-32 x 1/2 Slotted Truss Hd	1
40	00-438908	Bar - Transport Roller	1
41	00-915103	Bar - Lockout	1
42	SD-015-07	Self-Tapping Screw 1/4-20 x 5/8 Hex Washer Hd., Type RL	3
43	00-477747	Set Screw - Special	1
44	NS-017-20	Jam Nut 3/8-24 Hex	1
45	RR-006-23	Retaining Ring	1
46	00-478420	Roller - Transport	1
47	00-438911	Screw - Adjusting	1
48	SD-033-08	Self-Tapping Screw 5/16-18 x 1 Hex Washer Hd., Type TT	1
49	WS-003-49	Washer 0.266 x 0.563 x 0.062 (SST)	2
50	SC-123-56	Mach. Screw 1/4-28 x 1/2 Hex Button Hd. (SST)	1
51	00-478428	Bar - Transport Interlock	1
52	00-439017	Wick - Slide Rod Lubrication	1

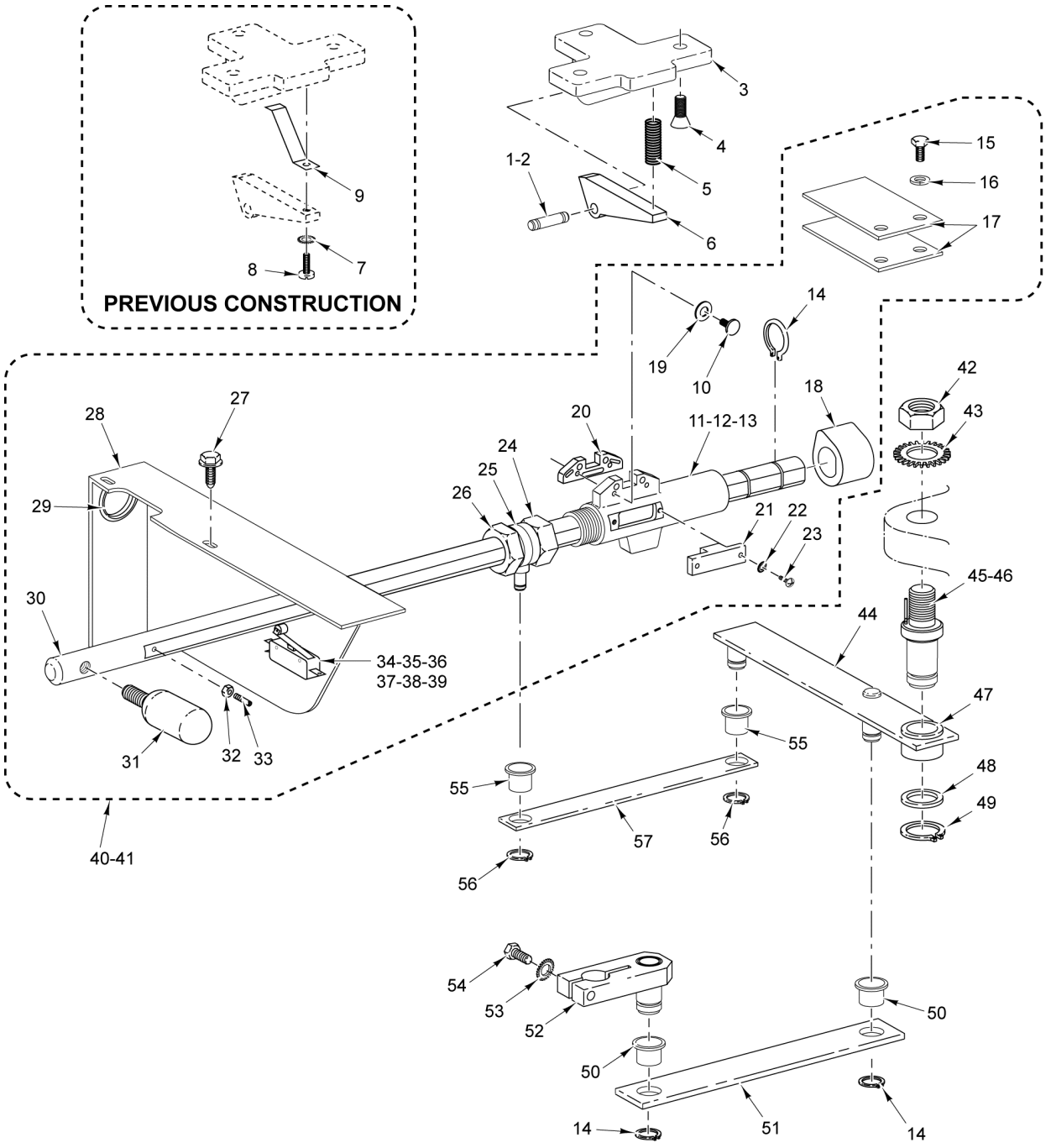

2712	ML-104822	**2912**	ML-134245	**2912**	ML-136154	**2912PS**	ML-134247
2712	ML-134235	**2912**	ML-136111	**2912**	ML-136188	**2912PS**	ML-136175
2712C	ML-134237	**2912**	ML-136113	**2912**	ML-136189	**2912C**	ML-134248
2712PHS	ML-134238	**2912**	ML-136153	**2912**	ML-104996	**2912C**	ML-136174
						2912B	ML-134251

PL-57003

AUTOMATIC CARRIER UNIT

AUTOMATIC CARRIER UNIT

ILLUS. PL-57003	PART NO.	NAME OF PART	AMT.
1	00-477767	Shaft - Pawl	1
2	RR-010-06	Retaining Ring	2
3	00-875474-00002	Bracket - Pawl	1
4	SD-024-29	Self-Tapping Screw 10-32 x 3/4 Phil. Flat Hd., Type TT	3
5	00-478429	Spring - Pawl	1
6	00-873591	Pawl - Auto-Engage	1
7	WL-007-02	Lockwasher #6 External (Previous Construction)	1
8	SC-009-49	Mach. Screw 6-32 x 3/8 Slotted Rd. Hd. (Previous Construction)	1
9	00-477762	Pawl - Auto-Engage (Previous Construction)	1
10	SC-007-68	Mach. Screw 8-32 x 5/8 Slotted Rd. Hd	2
11	00-477755-00002	Carrier - Automatic	1
12	00-478269	Bearing (Auto) - Carrier	2
13	00-478277	Wick - Carrier	1
14	RR-007-21	Retaining Ring	4
15	SD-038-22	Self-Tapping Screw 10-24 x 1/2 Hex Washer Hd., Type RL	2
16	WL-008-13	Lockwasher #10 Internal Shakeproof	2
17	00-478407	Spring - Auto/Manual Lock	2
18	00-478406	Lock - Auto/Manual	1
19	WL-007-07	Lockwasher #8 External Shakeproof	2
20	00-477763-00002	Ramp - Auto-Engage	1
21	00-477775	Key - Auto-Engage	1
22	WL-007-02	Lockwasher #6 External	2
23	SC-009-49	Mach. Screw 6-32 x 3/8 Slotted Rd. Hd	2
24	00-478025	Nut - Swivel Lock	1
25	00-477761-00002	Swivel - Auto-Carrier	1
26	00-478024	Lock - Swivel	1
27	SD-038-16	Self-Tapping Screw 6-32 x 3/8 Hex Washer Hd., Type RL	2
28	00-479954	Bracket - Switch	1
29	00-479950	Grommet - Electrical	1
30	00-477764	Shaft - Auto-Carrier	1
31	00-875353	Knob & Lever Assy	1
32	NS-018-01	Jam Nut 1/4-20 Hex (SST)	1
33	00-478408	Pin - Carrier Shaft	1
34	00-087711-00270	Switch - Auto/Manual (2912PS Uses Quantity of 2)	1
35	00-478284	Barrier - Mylar	1
36	NS-009-02	Nut 4-40 Hex	2
37	WL-006-43	Lockwasher #4 Helical (SST)	2
38	SC-060-40	Mach. Screw 4-40 x 5/8 Slotted Rd. Hd	2
39	SC-112-90	Mach. Screw 4-40 x 1 Slotted Pan Hd. (2912PS)	2
*40	00-915165	Sub-base Assy. (Painted) (Incls. Items 10 thru 38) (2912)	1
*41	00-915166	Sub-base Assy. (Burnished) (Incls. Items 10 thru 38) (2912)	1
42	NS-017-41	Jam Nut 5/8-18 Hex (SST)	1
43	WL-019-12	Lockwasher 5/8 External	1
44	00-478003	Main Link Assy. (Incls. Item 47)	1
45	00-477781	Pivot - Main Link	1
46	RP-005-04	Roll Pin 1/8 Dia. x 3/4 Lg	1
47	00-478027	Bearing - Main Link	1
48	00-478040	Washer - Main Link	2
49	RR-009-05	Retaining Ring	1
50	00-478030	Bearing - Motor Link	2
51	00-478005	Link Assy. - Motor Drive	1
52	00-873438	Motor Crank Link Assy	1
53	WL-007-16	Lockwasher 1/4 External Shakeproof	1
54	SC-118-17	Cap Screw 1/4-20 x 1-1/4 Hex Hd	1
55	00-478028	Bearing - Carrier Link	2
56	RR-009-03	Retaining Ring	2
57	00-478006	Link Assy. - Carrier	1

* (Additional items included in this assembly are listed in Auto Base Unit.)

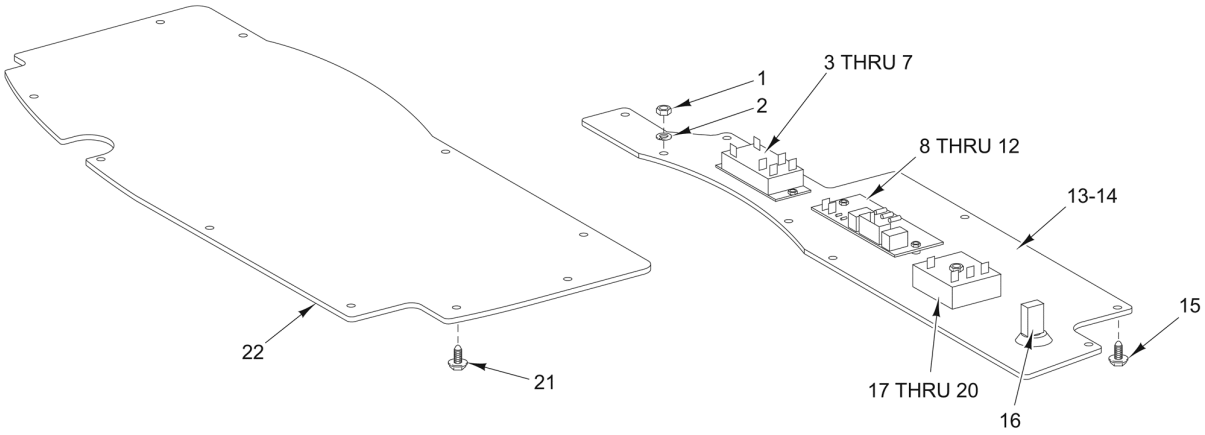

2712	ML-104822	**2912**	ML-134245	**2912**	ML-136154	**2912C**	ML-134248
2712	ML-134235	**2912**	ML-136111	**2912**	ML-136188	**2912C**	ML-136174
2712C	ML-134237	**2912**	ML-136113	**2912**	ML-136189		
2712PHS	ML-134238	**2912**	ML-136153	**2912**	ML-104996		

PL-57015

ELECTRICAL COVER ASSEMBLY
(2712 & 2912 SERIES)

ELECTRICAL COVER ASSEMBLY
(2712 & 2912 SERIES)

ILLUS. PL-57015	PART NO.	NAME OF PART	AMT.
1	NL-011-12	Nut 8-32 Hex (SST)	1
2	WL-014-05	Lockwasher #8 External Shakeproof (SST)	1
3	00-087714-042-1	Relay (2-Pole) (120 VAC) (30 Amp.)	1
4	00-087714-042-3	Relay (2-Pole) (240 VAC)	1
5	WS-023-22	Washer (SST)	2
6	WL-007-01	Lockwasher #6 External Shakeproof	2
7	NS-009-07	Nut 6-32 Hex	2
8	00-479708	Board - Printed Circuit	1
9	00-478392	Spacer - Nylon	2
10	WS-023-22	Washer (SST)	2
11	WL-007-01	Lockwasher #6 External Shakeproof	2
12	NS-009-07	Nut 6-32 Hex	2
13	00-873485-00001	Cover - Electrical (Without Auto Shutoff)	1
14	00-873485-00002	Cover - Electrical (With Auto Shutoff)	1
15	SD-038-16	Self-Tapping Screw 6-32 x 3/8 Hex Washer Hd., Type RL	8
16	00-088196-00028	Breaker - Thermal Overload (2 Amp.)	1
17	00-087714-069-1	Timer - Relay (115 V.) (Auto Shutoff Only)	1
18	WS-022-01	Washer (SST) (2912 & 2912C)	1
19	WL-014-07	Lockwasher #10 External Shakeproof (SST)	1
20	NS-011-18	Nut 10-24 Hex (SST) (2912 & 2912C)	1
21	SD-038-16	Self-Tapping Screw 6-32 x 3/8 Hex Washer Hd., Type RL	10
22	00-478034-00001	Cover - Bottom	1

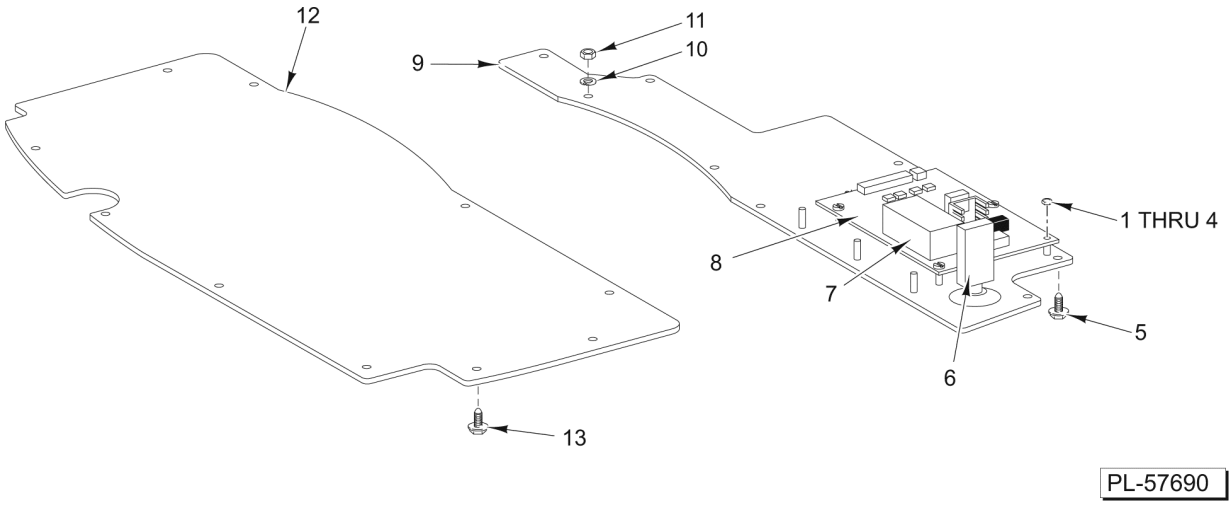

ELECTRICAL COVER ASSEMBLY
(2912B, ML-134251)

ELECTRICAL COVER ASSEMBLY
(2912B, ML-134251)

ILLUS. PL-57690	PART NO.	NAME OF PART	AMT.
1	WL-007-01	Lockwasher #6 External Shakeproof	5
2	WS-031-32	Washer (Nylon)	5
3	NS-009-07	Nut 6-32 Hex	5
4	00-478285-00002	Standoff	5
5	SD-038-16	Self-Tapping Screw 6-32 x 3/8 Hex Washer Hd., Type RL	8
6	00-088196-00028	Breaker - Thermal Overload (2 Amp.)	1
7	00-087714-042-1	Relay (2-Pole) (120 VAC) (30 Amp.)	1
8	00-873633	PCB Assy. - Slicer Control Board	1
9	00-873485-00003	Cover - Electrical (115 V.)	1
10	WL-014-05	Lockwasher #8 External Shakeproof (SST)	1
11	NS-011-12	Stop Nut 8-32 (SST)	1
12	00-478034-00001	Cover - Bottom	1
13	SD-038-16	Self-Tapping Screw 6-32 x 3/8 Hex Washer Hd., Type RL	10

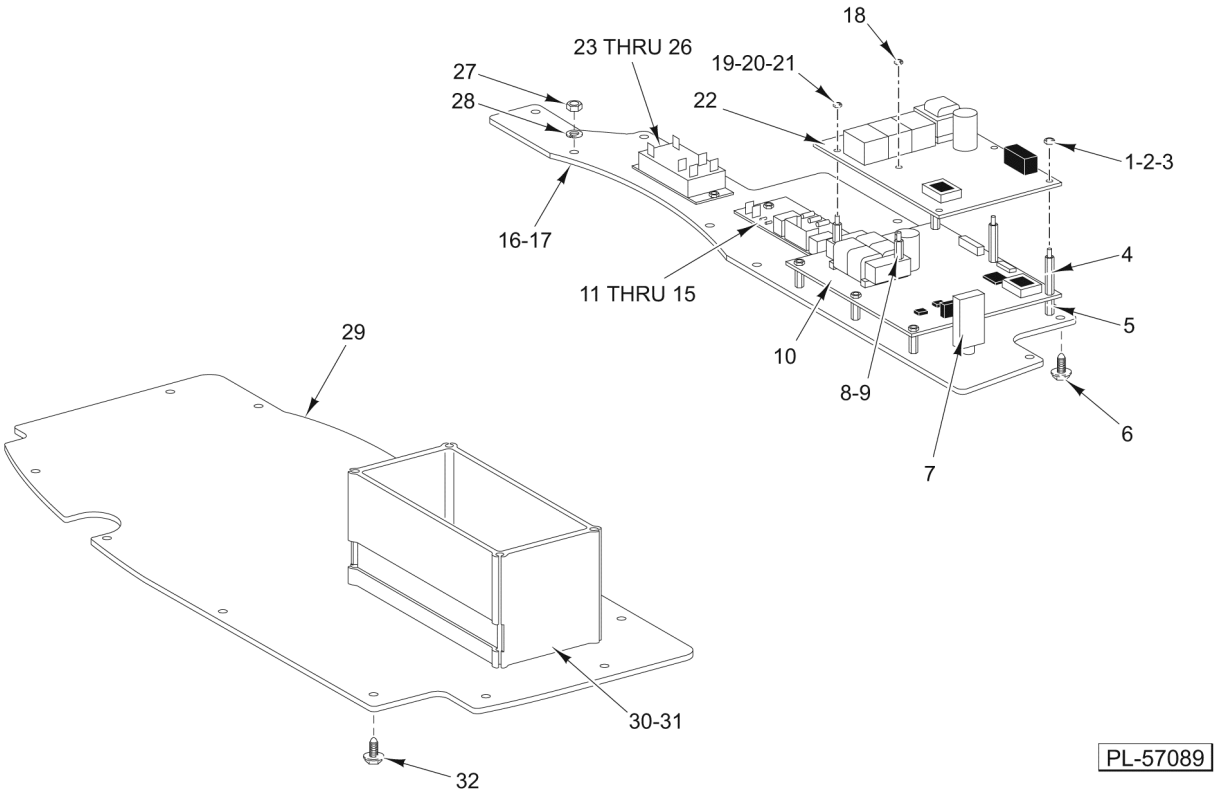

ELECTRICAL COVER ASSEMBLY
(2912PS, ML-134247 & ML-136175)

ELECTRICAL COVER ASSEMBLY
(2912PS, ML-134247 & ML-136175)

ILLUS. PL-57089	PART NO.	NAME OF PART	AMT.
1	WL-007-01	Lockwasher #6 External Shakeproof	3
2	WS-031-32	Washer (Nylon)	3
3	NS-009-07	Nut 6-32 Hex	3
4	00-478285-00003	Standoff	3
5	00-478285-00002	Standoff	6
6	SD-038-16	Self-Tapping Screw 6-32 x 3/8 Hex Washer Hd., Type RL	8
7	00-088196-00028	Breaker - Thermal Overload (2 Amp.)	1
8	00-478285-00002	Standoff	2
9	SC-018-60	Mach. Screw 6-32 x 1-1/8 Phil. Pan Hd	2
10	00-873169	PCB Assy. - Scale	1
11	00-479708	Board - Printed Circuit	1
12	00-478392	Spacer - Nylon	2
13	WS-023-22	Washer (SST)	2
14	WL-007-01	Lockwasher #6 External Shakeproof	2
15	NS-009-07	Nut 6-32 Hex	2
16	00-873485-00001	Cover - Electrical (Without Auto Shutoff)	1
17	00-873485-00002	Cover - Electrical (With Auto Shutoff)	1
18	NS-009-07	Nut 6-32 Hex	1
19	NS-009-07	Nut 6-32 Hex	1
20	WS-023-22	Washer (SST)	1
21	WL-007-01	Lockwasher #6 External Shakeproof	1
22	00-873566	PCB Assy. - Slicer Control Board	1
23	00-087714-042-1	Relay (2-Pole) (120 VAC) (30 Amp.)	1
24	WS-023-22	Washer (SST)	2
25	WL-007-01	Lockwasher #6 External Shakeproof	2
26	NS-009-07	Nut 6-32 Hex	2
27	NS-011-12	Stop Nut 8-32 (SST)	1
28	WL-014-05	Lockwasher #8 External Shakeproof (SST)	1
29	00-478034-00002	Cover - Bottom (2912PS)	1
30	00-478452	Chute - Load Cell Access	1
31	SD-036-39	Self-Tapping Screw 10-24 x 3/8 Slotted Truss Hd., Type TT (SST)	4
32	SD-038-16	Self-Tapping Screw 6-32 x 3/8 Hex Washer Hd., Type RL	10

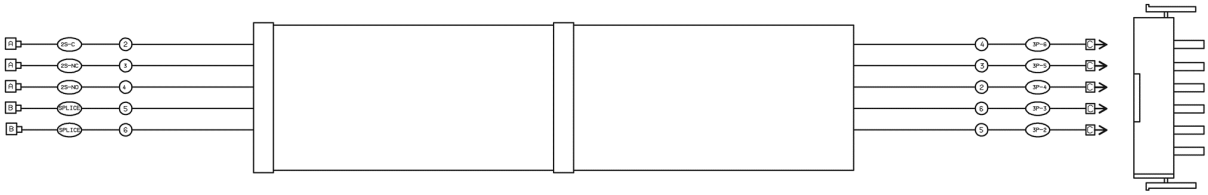

00-478280-1 Harness - Wiring

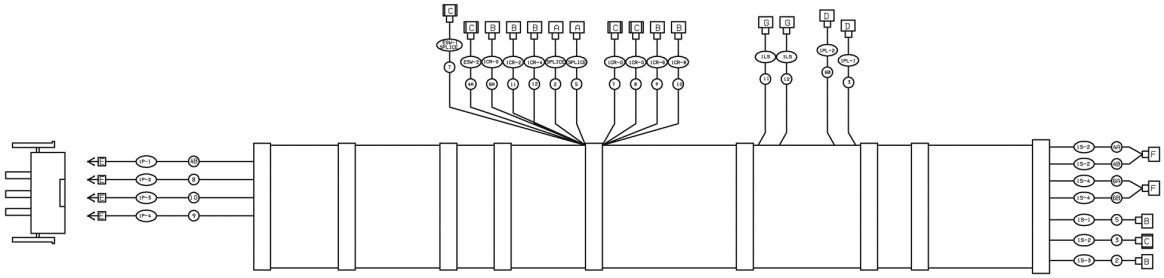

00-478384-1 Harness - Wiring

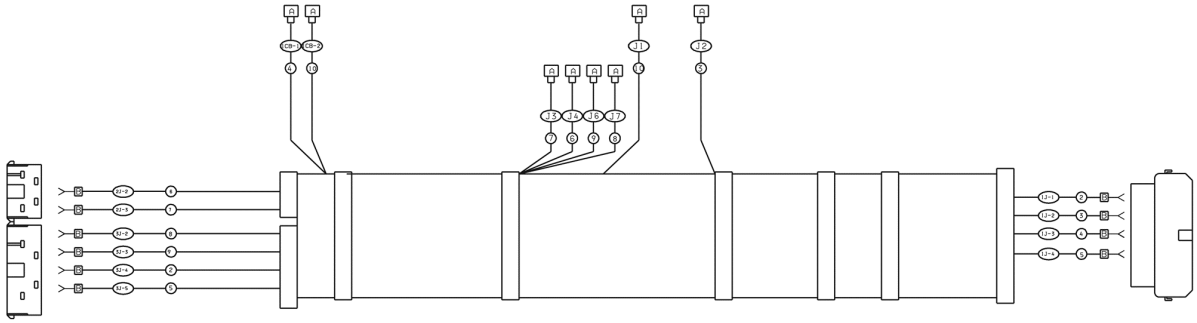

00-478385-1 Harness - Wiring

2712	ML-104822
2712	ML-134235
2712C	ML-134237
2712PHS	ML-134238

PL-57092

WIRING HARNESS (2712 SERIES)

WIRING HARNESS
(2712 SERIES)

ILLUS. PL-57092	PART NO.	NAME OF PART	AMT.
1	00-478280-00001	Wiring Harness	1
2	00-478384-00001	Wiring Harness	1
3	00-478385-00001	Wiring Harness	1

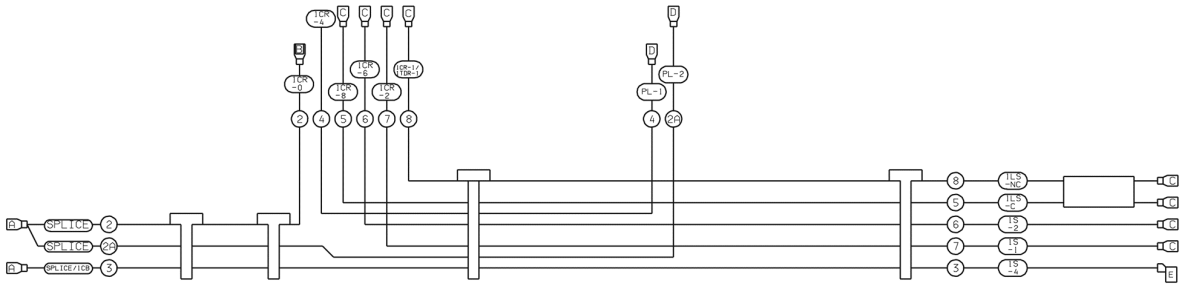

00-875126-1 Harness - Wiring
(2812, ML-134239, 2812C, ML-134244, 2812PS, ML-134241, & 2812CB, ML-136141)

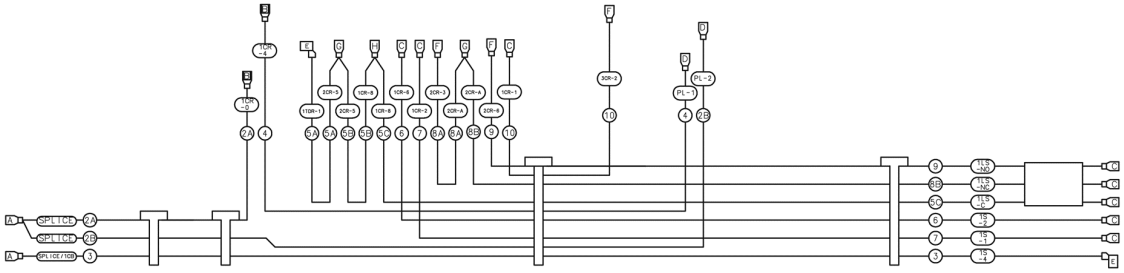

00-914229-1 Harness - Wiring
(With Auto Shutoff And Gauge Reset)
(2812, ML-136110 & 2812PS, ML-136114)

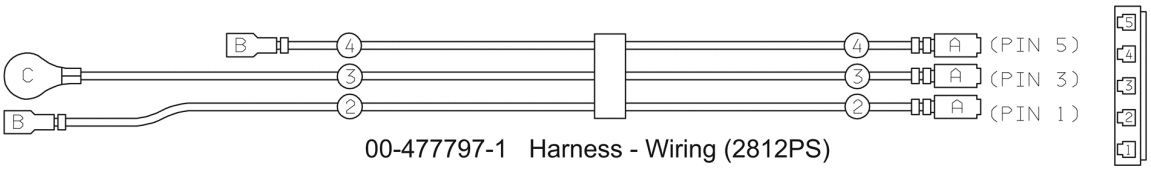

00-477797-1 Harness - Wiring (2812PS)

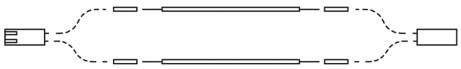

00-478352 Harness - Wiring (2812PS)

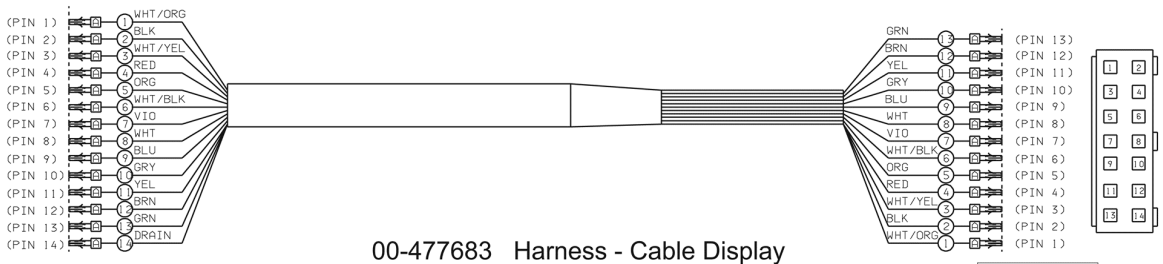

00-477683 Harness - Cable Display
(2812PS, ML-134241)

WIRING HARNESS
(2812 & 2812PS SERIES)

WIRING HARNESS
(2812 & 2812PS SERIES)

ILLUS. PL-57697	PART NO.	NAME OF PART	AMT.
1	00-875126-00001	Wiring Harness (ML-134239, ML-134244,	AR
2	00-914229-00001	NLA - Obsolete--Wiring Harness (With Auto Shutoff and Gauge Reset) (ML-136110 & ML-136114)	1
3	00-477797-00001	Wiring Harness (2812PS)	1
4	00-478352	Wiring Harness (2812PS)	1
5	00-477683	Wiring Harness (2812PS, ML-134241)	1

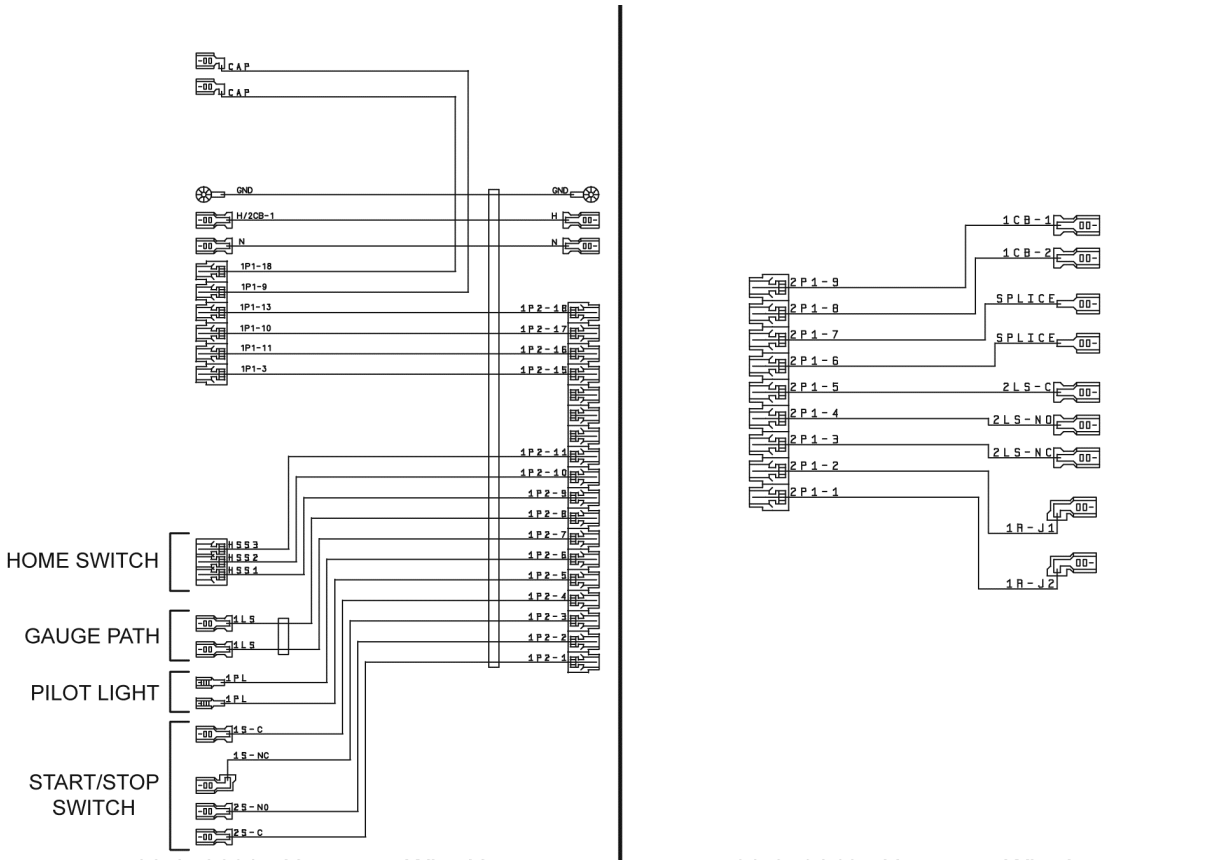

00-873639 Harness - Wire Upper

00-873640 Harness - Wire Lower

PL-57696

WIRING HARNESS
(2912 ML-136111, ML-136113)
(2912B ML-134251)

WIRING HARNESS
(2912 ML-136111, ML-136113)
(2912B ML-134251)

ILLUS. PL-57696	PART NO.	NAME OF PART	AMT.
1	00-873639	Wiring Harness (Upper)	1
2	00-873640	Wiring Harness (Lower)	1

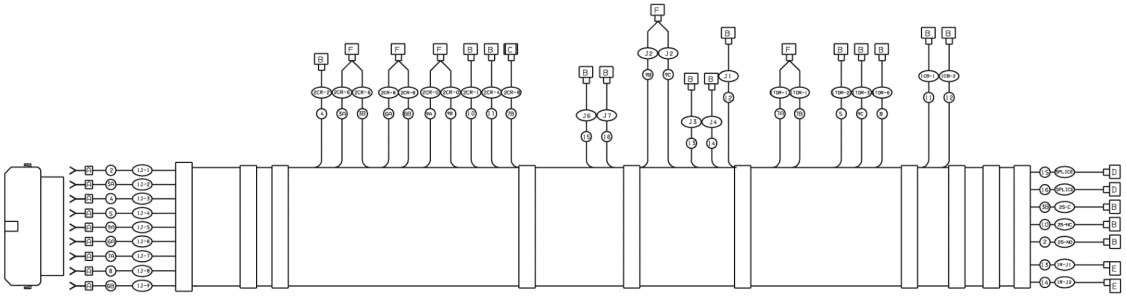

00-873726-1 Harness - Wiring Lower (With Auto Shutoff)

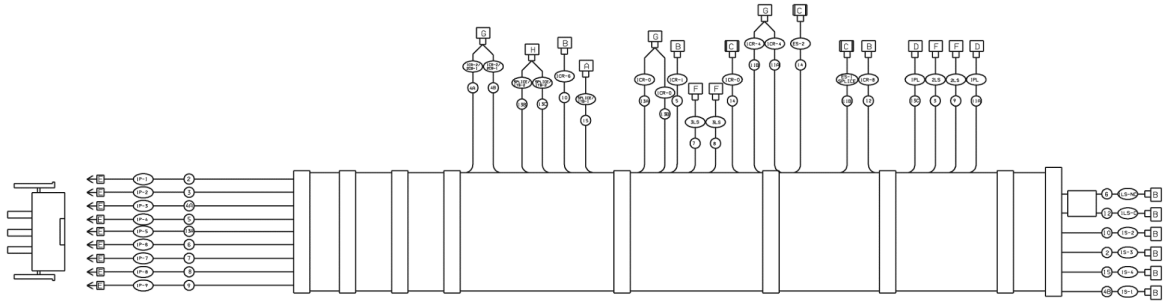

00-873551-1 Harness - Wiring Top (With Auto Shutoff)

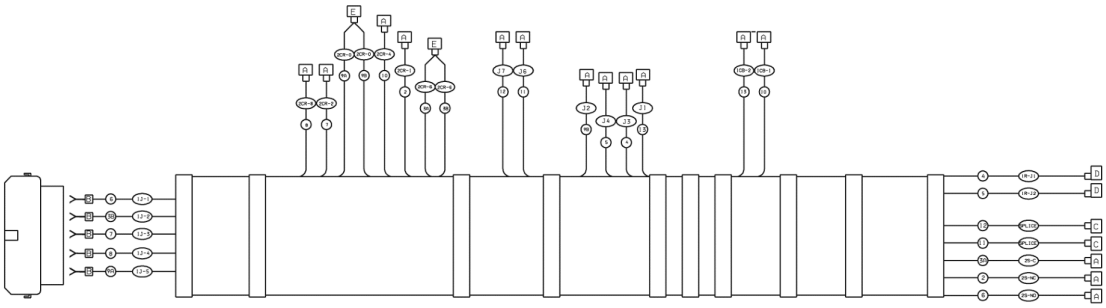

00-873725-1 Harness - Wiring Lower (Without Auto Shutoff)

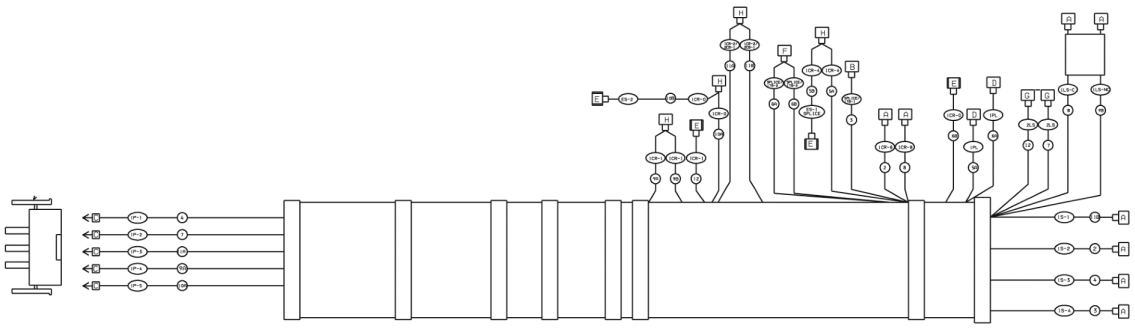

PL-57107

00-873550-1 Harness - Wiring Top (Without Auto Shutoff)

WIRING HARNESS
(2912 ML-134245, ML-136111, ML136113)
(2912C ML-134248)

WIRING HARNESS
(2912 ML-134245, ML-136111, ML136113)
(2912C ML-134248)

ILLUS. PL-57107	PART NO.	NAME OF PART	AMT.
1	00-873726-00001	Wiring Harness Lower (With Auto Shutoff)	1
2	00-873551-00001	Wiring Harness Top (With Auto Shutoff)	1
3	00-873725-00001	Wiring Harness Lower (Without Auto Shutoff)	1
4	00-873550-00001	Wiring Harness (Top (Without Auto Shutoff)	1

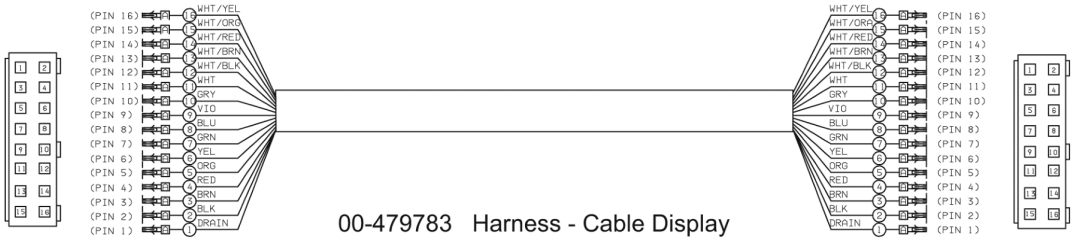

00-479783 Harness - Cable Display

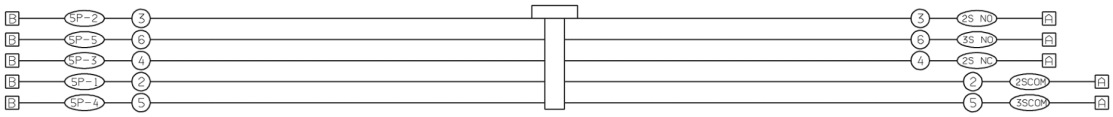

00-873785-1 Harness - Auto/Manual Switch

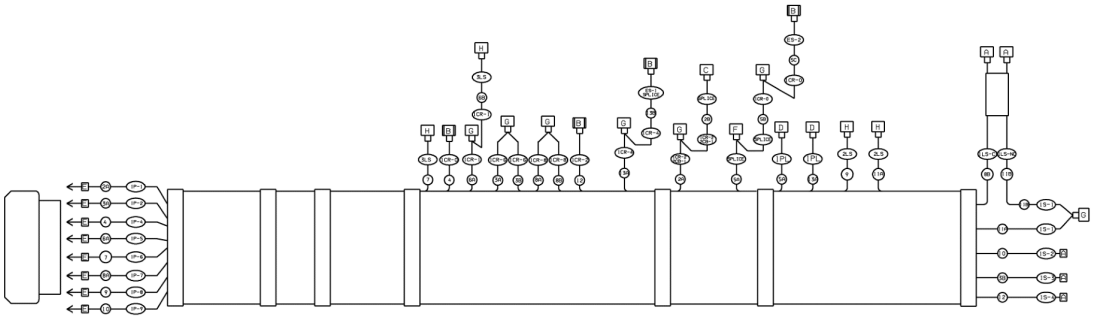

00-479785-1 Harness - Upper Wiring

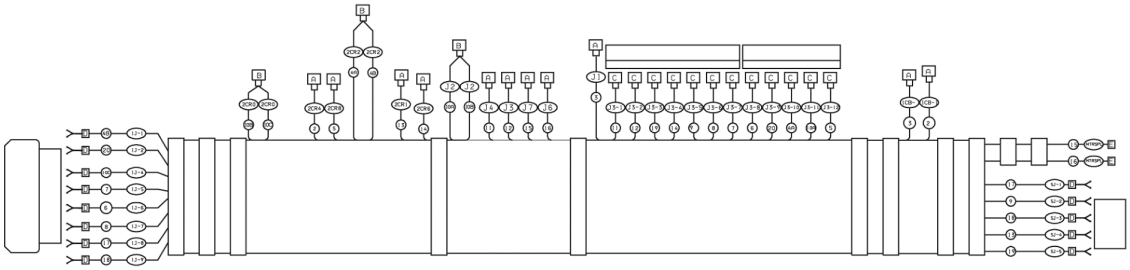

00-873779-1 Harness - Lower Wiring

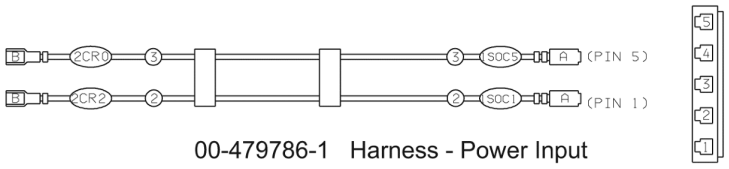

00-479786-1 Harness - Power Input

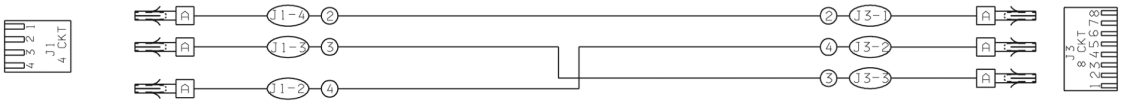

00-479784-1 Harness - Scale/Control Board PL-57105

WIRING HARNESS
(2912PS, ML-134247)

WIRING HARNESS
(2912PS, ML-134247)

ILLUS. PL-57105	PART NO.	NAME OF PART	AMT.
1	00-479783	Harness - Cable Display	1
2	00-873785-00001	Harness - Auto/Manual Switch	1
3	00-479785-00001	Harness - Upper Wiring	1
4	00-873779-00001	Harness - Lower Wiring	1
5	00-479786-00001	Harness - Power Input	1
6	00-479784-00001	Scale/Control Board Wiring Harness	1