HOBART

INSTRUCTION MANUAL

... with Replacement Parts

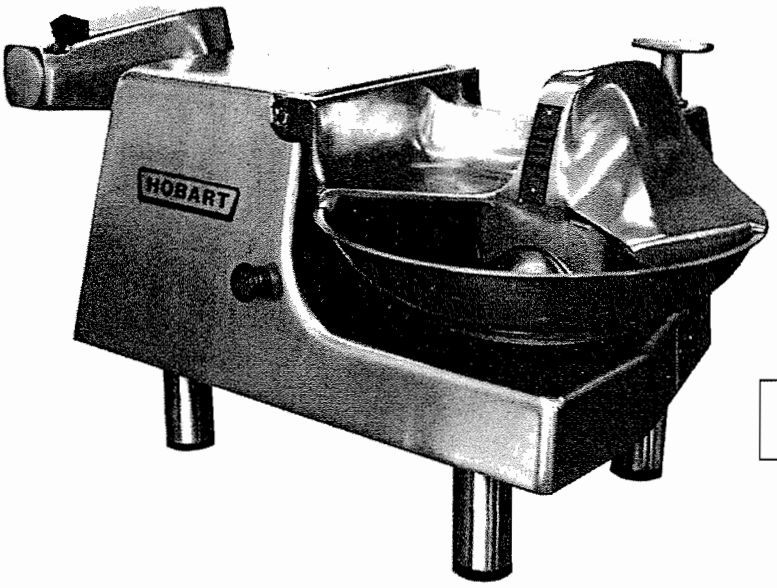

MODELS 8145 & 84145 FOOD CUTTERS

(INCLUDES MOTOR PARTS)

ML-33220 Model 8145
(Without Gear Attach.)

ML-33221 Model 84145
(With Gear Attach.)

THIS MANUAL REPLACES AND SHOULD BE USED INSTEAD OF FORM 12046C (12-81).

PRIOR ML'S COVERED IN THIS MANUAL:

ML-18492 MODEL 8145
(WITHOUT GEAR ATTACH.)

ML-18595 MODEL 84145
(WITH GEAR ATTACH.)

A product of HOBART CORPORATION TROY, OHIO 45374

FORM 14474 (1-86)

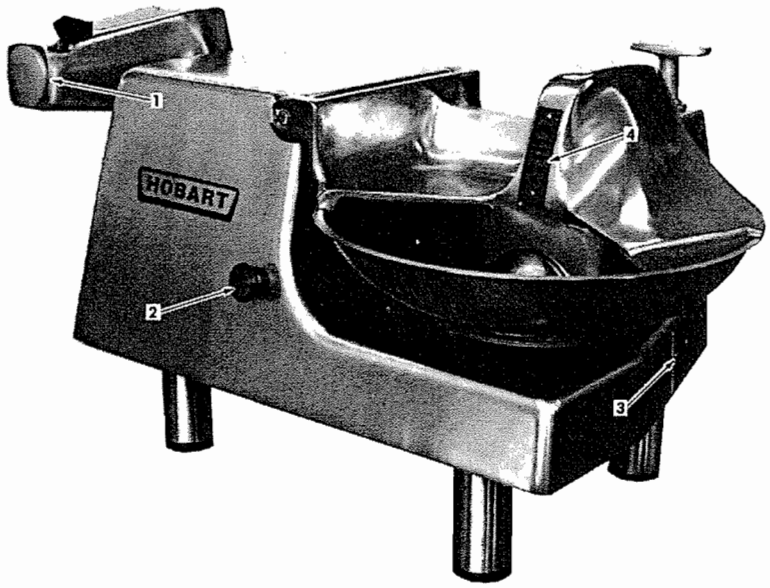

Fig. 1

Instructions for Operation and Care of MODELS 8145 AND 84145 FOOD CUTTERS

A. INSTALLATION:

If cord and plug is not used with this machine, electrical connections should be made by qualified workmen who will observe all applicable Safety Codes and the National Electrical Code.

A.1 Before making any electrical connections, CHECK THE SPECIFICATIONS ON THE NAME PLATE (3, Fig. 1) TO MAKE SURE THEY AGREE WITH THOSE OF YOUR ELECTRICAL SERVICE. Connect multi-phase motor so bowl will turn clockwise. Knives will then turn downward (viewed from front of the machine), (see arrow on knife shaft (1, Fig. 4)).

B. SAFETY INTERLOCK:

B.1 All knives are dangerous. CAUTION: KEEP HANDS FROM UNDER BOWL COVER. A caution plate is attached to the bowl cover (4, Fig. 1) as a reminder.

B.2 The bowl cover is locked down (see section G) when the switch (2, Fig. 1) is pulled "On". It cannot be unlocked until the switch is pushed "Off". If the bowl cover is removed or in a raised position, the switch cannot be pulled "On". After the switch is pushed off, the knives rotate briefly.

C. OPERATION:

C.1 Before operating the food cutter, make sure the knives are correctly mounted and tightened on the shaft (section E.2). The comb (3, Fig. 3) should be in place and the bowl cover locked down (section G).
NOTE: To prevent bowl damage, and for proper cutting, always keep comb in position to insure correct spacing between bowl cover and bowl.

C.2 The types of products that may be processed in the HOBART food cutter are almost unlimited. Fresh boned meats, vegetables, fruits, nut meats, natural cheese and bread crumbs are cut fine or coarse depending on the length of time they are left in the bowl. All products to be processed should be chilled but not frozen.

C.2.1 Feed the material directly into the food cutter bowl. Products may be cut separately or blended.

C.3 The bowl cover of this food cutter is designed to roll or turn the material, thus

providing a mixing action. It is NEVER necessary to reach beneath the bowl cover. Material can be discharged with a bowl scraper or spatula while the machine is in operation. Should inspection be necessary, ALWAYS shut off the motor - WAIT for the knives to stop . . . then unlock and lift the bowl cover to remove any obstruction.

C.4 It is good practice on a food cutter with attachment drive (Model 84145) to remove the knife unit when the attachment is used. Also remove the attachment when it is not in use (this will reduce the load on the motor).

D. EXTENSION FOOT:

D.1 The food cutter is equipped with an extension foot which is located under the machine. **CAUTION: When using attachments, always fully extend the extension foot to front position.** When attachment is not in use, push foot back underneath machine for convenient storage.

E. KNIVES:

E.1 The knife assembly (1, Fig. 2) should be removed as a unit for cleaning, sharpening, etc. Stop machine, wait for knives to STOP turning, unlatch and raise bowl cover, remove hand knob (2, Fig. 2) and carefully slide unit from shaft.

E.2 The knives are properly placed and adjusted when shipped from the factory. The clearance between the knife (at the closest point) and the bowl should be 1/32". The leader knife (beveled on one side only) is on the side next to the motor. Knives are directly opposite each other and are set to

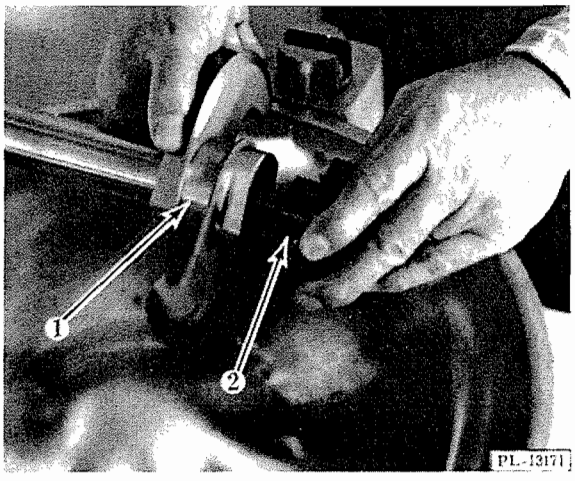

Fig. 2

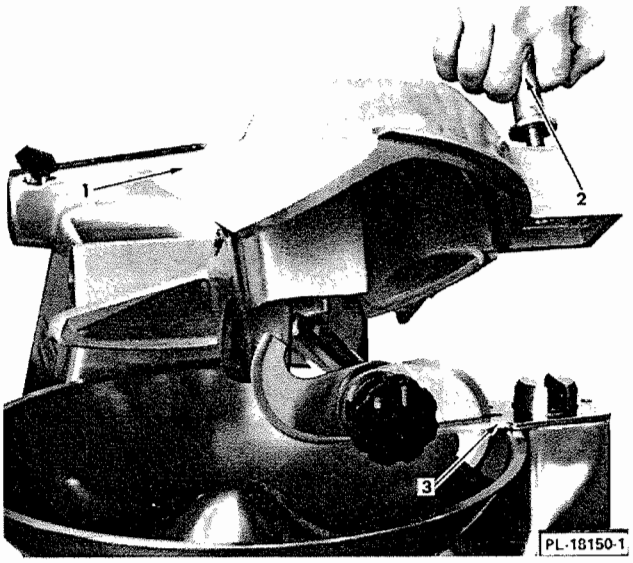

Fig. 3

cut downward at center of bowl when viewed from the hand knob (2, Fig. 2) end.

E.2.1 To check clearance or make adjustment, disconnect the power supply (make sure knives are not turning) unlatch and raise bowl cover (1, Fig. 3). Loosen hand knob (2, Fig. 2) a couple of turns (without removing knife unit from machine). Hold a wrench on the flats of sleeve (2, Fig. 4) to keep sleeve from turning and slightly loosen nut (3, Fig. 4) with a second wrench. Carefully tap loosened knives with a block of wood until the proper clearance is reached. Retighten nut, then hand knob.

E.3 Knives should be sharp, but should not have a razor edge. An extremely thin edge dulls quicker than the original factory bevel edge. For ordinary touch-up, use a carborundum stone, without disassembling the knife unit assembly (E.1). If a knife becomes nicked and it is necessary to grind it deeply, the knives should then be disassembled, readjusted and perhaps re-balanced (E.2.1). The knives must be close to the same weight to maintain proper balance because of the high speed operation. Knives are paired and balanced at the factory. Spare knives should be kept in pairs.

F. BOWL:

F.1 Bowl Removal.

F.1.1 Disconnect the power supply, wait for the knives to stop turning, unlatch and lift

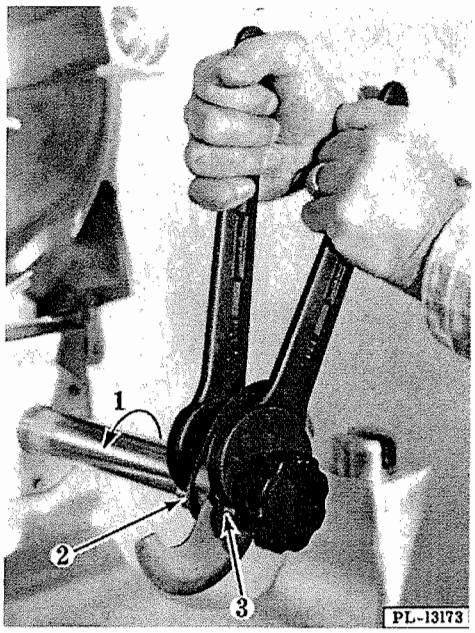

Fig. 4

the bowl cover. Carefully turn the knives to a horizontal position to avoid the sharp edges. Turn bowl clockwise, the short travel to its stop and then lift off bowl. It is not necessary to remove the comb when removing the bowl.

F.1.2 To reassemble bowl, place into position and rotate bowl counterclockwise to the stop.

G. BOWL COVER:

G.1 The bowl cover has a special shape that turns the product over in the revolving bowl. This eliminates the need for a separate deflector.

G.2 Bowl Cover Removal.

G.2.1 Push switch (2, Fig. 1) "Off" - releasing interlock. WAIT for knives to stop.

G.2.2 Turn bowl cover lock knob (2, Fig. 3) at right angle (approx.) to machine and lift knob.

G.2.3 Raise and lift off hinged bowl cover.

G.3 Bowl Cover Replacement.

G.3.1 To lock (or latch) the bowl cover, the switch must be in the "Off" position. Press the knob down and turn it counterclockwise to a position parallel with the knife shaft.

G.4 The knife comb (3, Fig. 3) may be lifted up and off when the bowl cover is in the raised position.

H. ATTACHMENT DRIVE:

H.1 The attachment drive (1, Fig. 1) will power #12 size Hobart attachments. These include the Chopping End, 9" Vegetable Slicer and Power Dicer. CAUTION: **When using attachments, always fully extend the extension foot to front position.**

J. MOTOR:

J.1 The single phase motor on this food cutter is of the capacitor start type.

K. CLEANING:

K.1 This food cutter has been designed for easy cleaning and maximum sanitation. The base is totally enclosed, the knives have closed adjustment slots, a scraper is unnecessary because of the special bowl cover which is removable for easy cleaning. The bowl is of one piece stainless steel (easily removed by turning clockwise). To clean this machine, unplug electrical supply cord and wipe down with a damp cloth. Dry with a clean soft cloth.

WARNING: Observe the same care while working around the knife that you would use with any sharp-edged tool.

L. LUBRICATION:

L.1 The bearings and gear cases are packed with a special grease. A Hobart service technician should check the lubricant at least once a year.

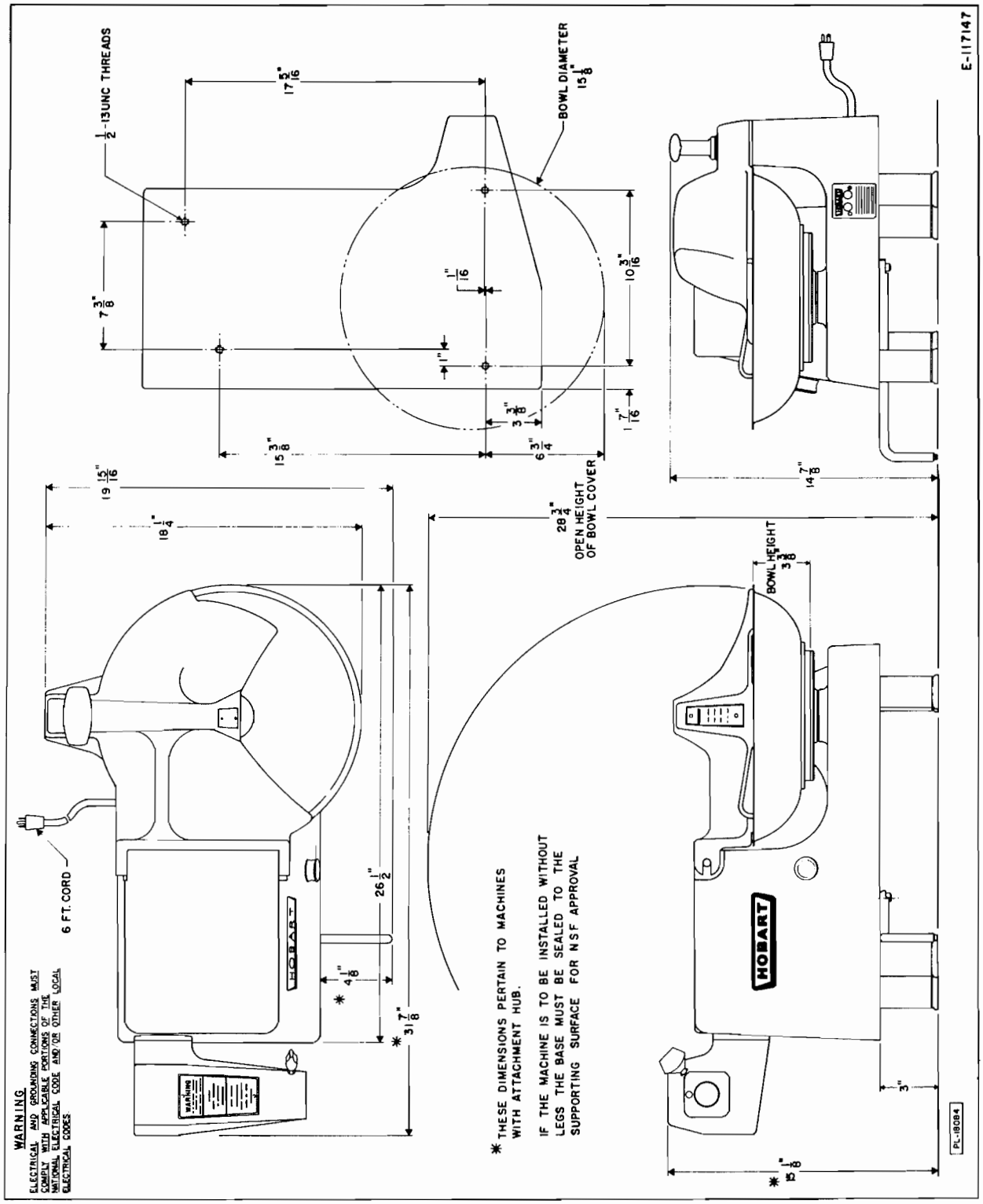

INSTALLATION DIAGRAM

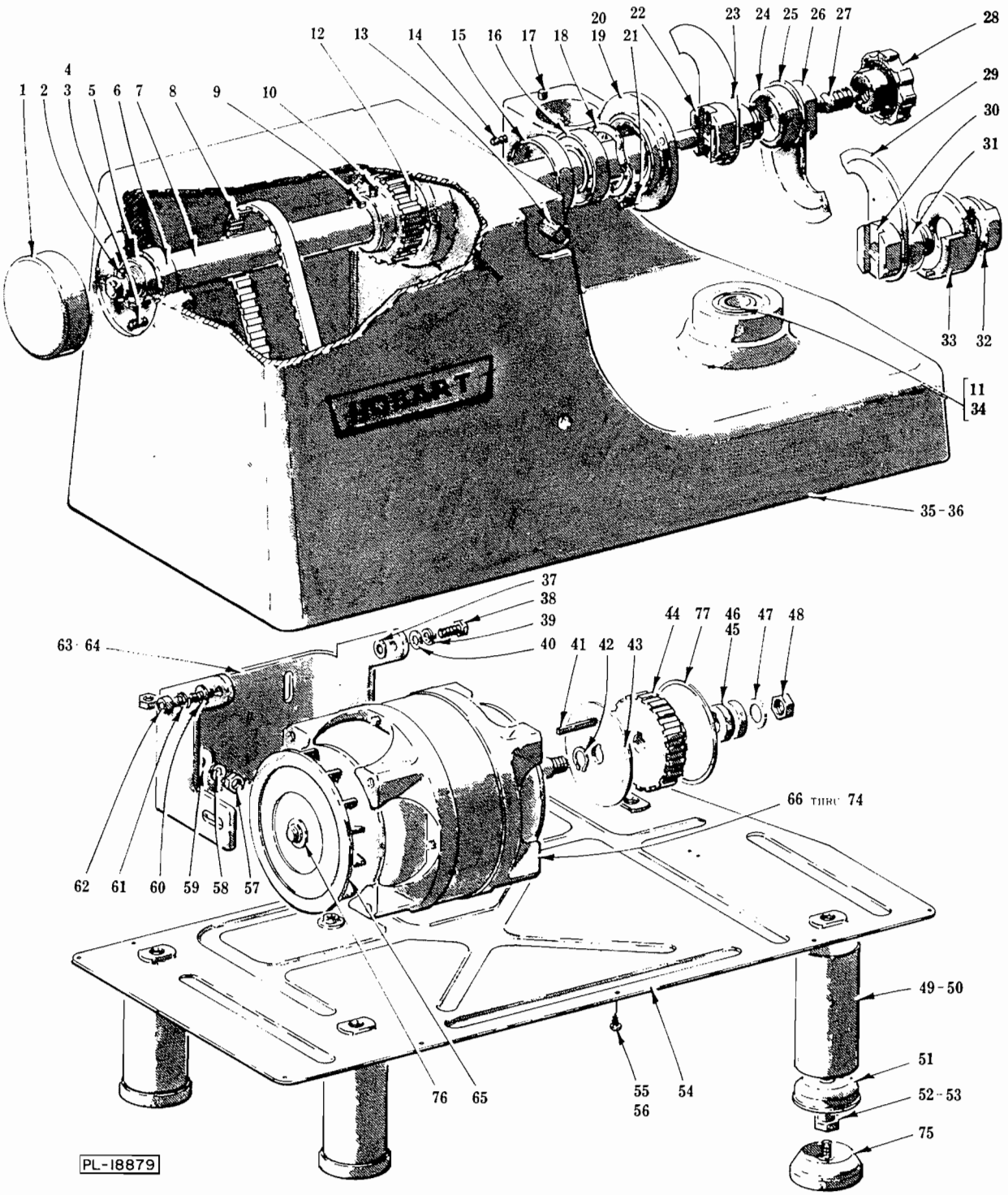

MOTOR AND BASE UNIT

ILLUS. PL-18879	PART NO.	NAME OF PART13	AMT.
*1	116636	Cover - Trim	1
2	RP-2-5	Rollpin ¼ Dia. x ⅞ Lg	1
*3	SD-27-17	Self-Tapping Screw 10-14 x 1½ Pan Hd. "Plastite"	3
*4	WS-3-1	Washer	3
5	116657	Seal - Knife Shaft (Attachment End)	1
6	BB-7-52	Ball Bearing - Fafnir #205KDD	1
7	116622	Shaft - Knife	1
8	116634	Belt - Timing (42T)	1
9	12430-143	Key	1

*For Machines without Gear Attachment ONLY.

MOTOR AND BASE UNIT (Cont.)

ILLUS. PL-18879	PART NO.	NAME OF PART[13]	AMT.
10	SC-88-70	Set Screw 10-24 x ¼ Soc. Hdls., Kn. Cup Pt	2
11	RR-7-7	Retaining Ring	2
12	116632	Pulley - Knife Shaft (20T)	1
13	116644	Shaft - Bowl Cover Hinge	1
14	SC-47-82	Set Screw 10-32 x 3/16 Soc. Hdls., Cup Pt	1
15	77362	Insert - Bearing	1
16	BB-15-22	Ball Bearing - Fafnir #9107KDD	1
17	11800-242	Dowel	1
18	SL-3-10	Loading Spring - Wavy	1
19	116633	Cap - End (Knife End)	1
20	124669	Seal - Knife Shaft (Knife End)	1
21	SC-67-9	Mach. Screw 10-32 x 5/8 Trimmed Hex Hd	3
22	71313	Bushing - Knife Retaining	1
23	71309	Knife - Rotary (Leader)	1
24	71312	Collar - Knife Retaining Bushing	1
25	71310	Knife - Rotary (Follower)	1
26	71311	Collar - Locking	1
27	78398	Insert - Knife Shaft	1
28	77371	Knob - Fluted	1
**29	17909	Knife - Rotary (Follower)	1
**30	7157	Bushing - Knife Retaining	1
**31	103903	Collar - Knife Retaining Bushing	1
**32	103904	Locking Collar - Knife Ret. Bushing	1
**33	23680	Balance - Knife	1
34	BB-5-34	Ball Bearing - MRC 204SZZ	2
35	118088-1	Base & Logo Assy. (1 Ph.) (Give Serial No., Mach. Model & Elec. Spec.) (Incls. items 5, 6, 11, 13, 14, 15, 17 & 34)	1
36	118088-2	Base & Logo Assy. (3 Ph.) (Give Serial No., Mach. Model & Elec. Spec.) (Incls. items 5, 6, 11, 13, 14, 15, 17 & 34)	1
37	WS-6-48	Washer	AR
38	SC-36-27	Cap Screw 5/16-18 x 1 Hex Hd	2
39	WL-3-44	Lock Washer 5/16 Medium	2
40	WS-4-25	Washer	2
41	12430-64	Key	1
42	RR-7-21	Retaining REing - Heavy Duty	1
43	116649	Flange - Motor Pulley	1
44	116650	Pulley - Motor Timing (20T)	1
45	291589	Pulley - Motor Drive (ML-33220 & ML-33221)	1
46	117506	Pulley - Motor Drive (ML-18492 & ML-18595)	1
47	WS-29-28	Washer	1
48	NS-17-30	Jam Nut ½-20 Hex Fin	1
49	77772-2	Leg (3″)	4
50	77772-1	Leg (4″)	4
51	64814	End Cap - Leg	4
52	290061-2	Stud - Leg (3″)	4
53	290061-3	Stud - Leg (4″)	4
54	116712	Bottom Cover & Weld Nut Assy	1
55	SD-15-4	Self-Tapping Screw 10-24 x ½ Pan Hd. Type TT	10
56	WL-10-6	Lock Washer 10 Ext. Shakeproof	1
57	NS-13-14	Full Nut 5/16-18 Hex Fin	4
58	WL-3-44	Lock Washer 5/16 Medium	4
59	291284	Washer	4
60	WS-4-25	Washer	2
61	WL-3-44	Lock Washer 5/16 Medium	2
62	SC-40-16	Cap Screw 5/16-18 x 1 Soc. Hd	2
63	117037-1	Motor Bracket Assy. (Domestic)	1
64	117037-2	Motor Bracket Assy. (Export)	1
65	292466-2	Fan - Ventilating	1
66	294025-1	Motor Assy. (115 V., 60 Hz., 1 Ph.) (Incls. items 65, 76 & Capacitor)	1
67	294025-2	Motor Assy. (200 V., 60 Hz., 1 Ph.) (Incls. items 65, 76 & Capacitor)	1
68	294025-3	Motor Assy. (230 V., 60 Hz., 1 Ph.) (Incls. items 65, 76 & Capacitor)	1
69	294025-4	Motor Assy. (115 V., 50 Hz., 1 Ph.) (Incls. items 65, 76 & Capacitor)	1
70	294025-5	Motor Assy. (220/240 V., 50 Hz., 1 Ph.) (Incls. items 65, 76 & Capacitor)	1
71	294025-6	Motor Assy. (100 V., 50 Hz., 1 Ph.) (Incls. items 65, 76 & Capacitor)	1
72	294025-7	Motor Assy. (200 V., 60 Hz., 3 Ph.) (Incls. items 65 & 76)	1
73	294025-8	Motor Assy. (230/460 V., 60 Hz., 3 Ph.) (Incls. items 65 & 76)	1
74	294025-9	Motor Assy. (220/240/380/415 V., 50 Hz., 3 Ph.) (Incls. items 65 & 76)	1
75	83681	Foot - Rubber	4
76	RR-7-18	Retaining Ring - Gripring	1
77	116649	Flange - Motor Pulley	1
	**71386	Single Knife & Knife Balance Assy. (Incls. items 29 thru 33)	1

**Single Knife Unit (Not NSF Approved). See page 13 for Comb.

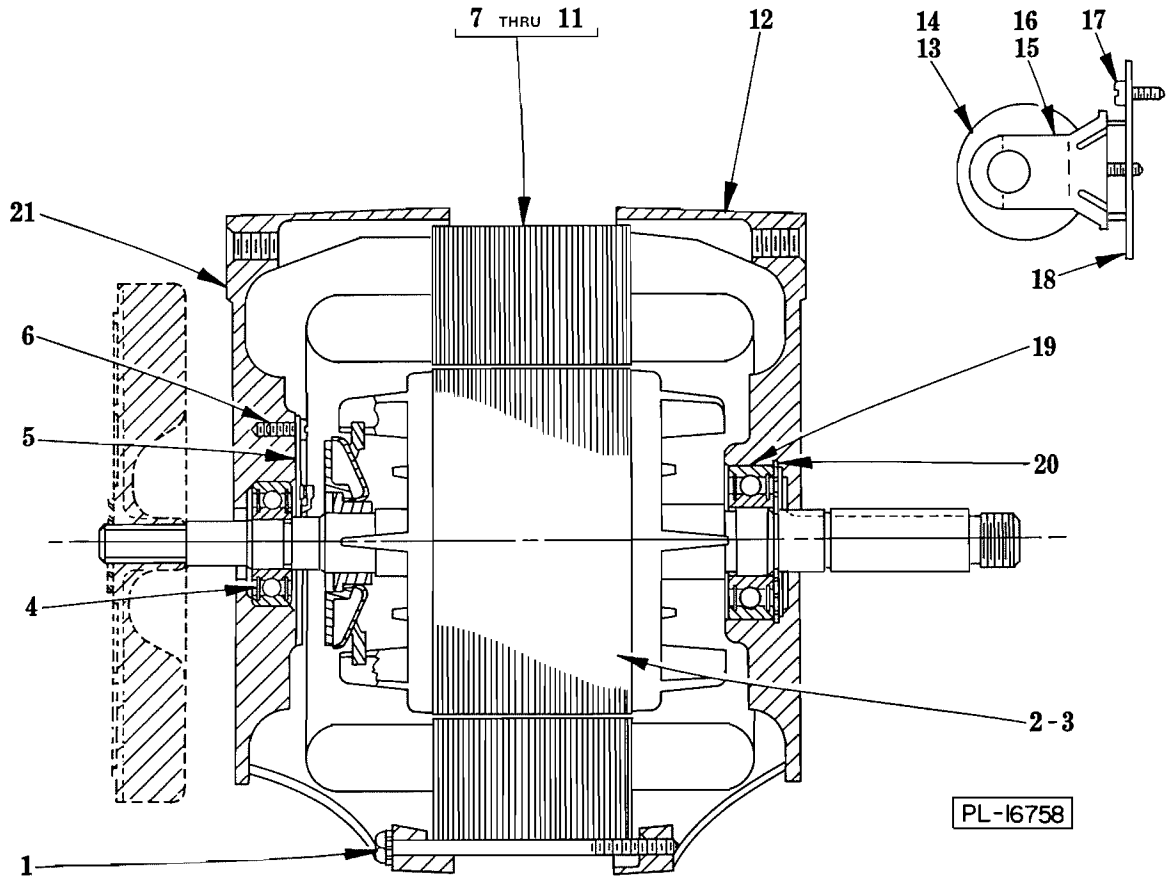

MOTOR PARTS
(1 PH.)

MOTOR PARTS
(1 PH.)

ILLUS. PL-16758	PART NO.	NAME OF PART[13]	AMT.
1	101233-3	Bolt 8-32 x 3 Hex Hd	4
2	22275-196	Rotor Assy. (60 Hz.)	1
3	22275-200	Rotor Assy. (50 Hz.)	1
4	BB-18-12	Ball Bearing - Fafnir #P201KDD	1
5	111688-4	Switch - Starting (Stationary Part)	1
6	SD-9-34	Self-Tapping Scew 6-32 x ⅜ Phil. Pan Hd., Type F	2
7	65477-110-1	Stator Assy. (115 V., 60 Hz.; 100 V., 50 Hz.)	1
8	65477-115-1	Stator Assy. (200 V., 60 Hz.)	1
9	65477-115-2	Stator Assy. (230 V., 60 Hz.)	1
10	65477-126-1	Stator Assy. (115 V., 50 Hz.)	1
11	65477-126-1	Stator Assy. (220/240 V., 50 Hz.)	1
12	111834	Bracket - Bearing (Drive End)	1
13	70487-15	Capacitor	1
14	70486-1	Cap - Capacitor End	1
15	66621-3	Bracket - Capacitor	1
16	SD-24-16	Self-Tapping Screw 10-24 x ½ Phil. Flat Hd., Type TT	2
17	SD-15-4	Self-Tapping Screw 10-24 x ½ Phil. Hd., Type TT	2
18	116655	Plate - Elec. Mtg	1
19	BB-20-18	Ball Bearing - ND #77503	1
20	278380	Washer - Wavy	1
21	111835-2	Bracket - Bearing (Switch End)	1

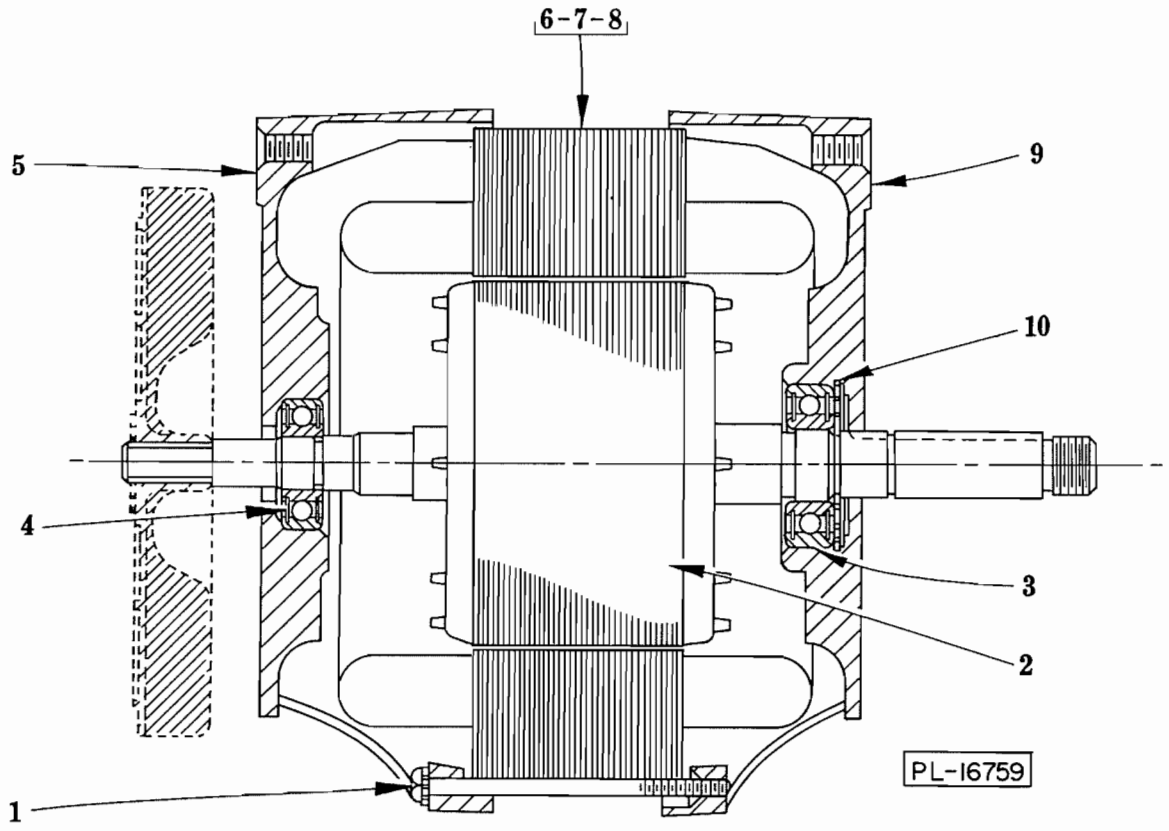

MOTOR PARTS
(3 PH.)

MOTOR PARTS
(3 PH.)

ILLUS. PL-16759	PART NO.	NAME OF PART[13]	AMT.
1	101233-3	Bolt 8-32 x 3 Hex Hd	4
2	15747-286	Rotor Assy	1
3	BB-20-18	Ball Bearing - ND #77503	1
4	BB-18-12	Ball Bearing - Fafnir #P201 KDD	1
5	113905-2	Bracket - Bearing (Fan End)	1
6	65478-107-1	Stator Assy. (200 V., 60 Hz.)	1
7	65478-115-1	Stator Assy. (230/460 V., 60 Hz.)	1
8	65478-116-1	Stator Assy. (220/240/380/415 V., 50 Hz.)	1
9	113904-3	Bracket - Bearing (Drive End)	1
10	278380	Washer - Wavy	1

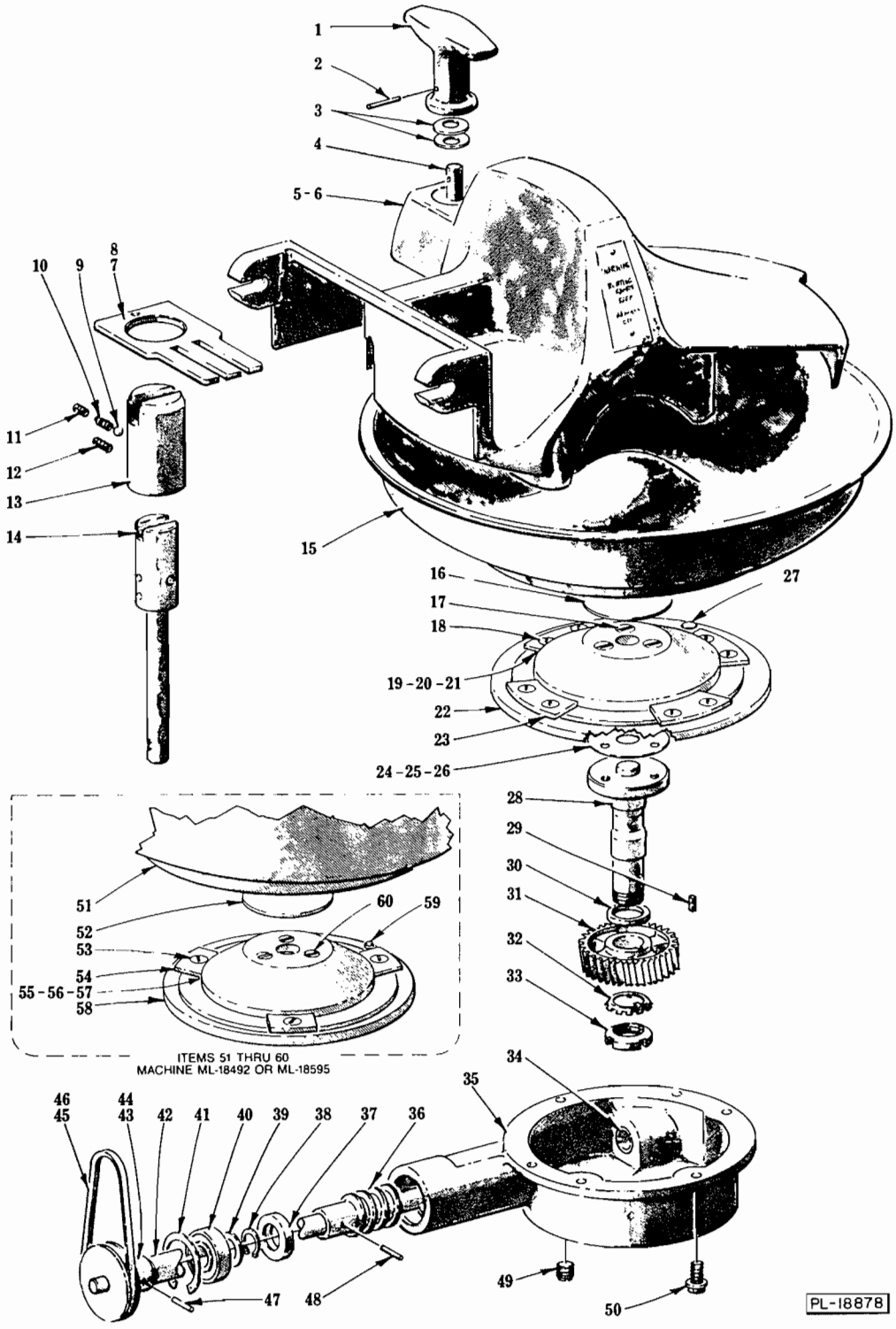
1
2
3
4
5-6
8
7
10
9
11
12
13
14
15
16
17
18
19-20-21
22
23
24-25-26
27
28
29
30
31
32
33
34
35
51
52
53
54
55-56-57
58
60
59
ITEMS 51 THRU 60
MACHINE ML-18492 OR ML-18595
46
45
44
43
42
41
40
39
38
37
36
47
48
49
50
PL-18878

BOWL UNIT

BOWL UNIT

ILLUS. PL-18878	PART NO.	NAME OF PART[13]	AMT.
1	116814	Knob - Locking	1
2	PG-3-27	Groov-Pin - Type A, 3/16 x 7/8	1
3	77374	Washer - Belleville	2
4	117168	Bolt - Interlock	1
5	118254	Bowl Cover & Warning Plate Assy. (60 Hz.)	1
6	120262-2	Bowl Cover (50 Hz.)	1
7	116642	Comb	1
8	118959	Comb (For Single Knife Only) (Not Shown)	1
9	BA-2-10	Ball 1/4 Dia	1
10	77381	Spring - Ball Detent	1
11	SC-110-99	Set Screw 5/16-18 x 3/8 Soc. Hdls., Oval Pt	1
12	SC-111-1	Set Screw 5/16-18 x 1/2 Soc. Hdls., Cup Pt	1
13	77376	Adapter - Locking	1
14	116829	Interlock Control Shaft Assy	1
15	291586-1	Bowl & Adapter Assy. (ML-33220 & ML-33221)	1
16	116651	Cover - Bowl Support	1
17	SC-22-32	Mach. Screw 1/4-20 x 1/2 Flat Hd	3
18	SC-53-9	Mach. Screw 1/4-28 x 1/2 Truss Hd	8
19	116653-3	Shim - Clamp (.001" Thk., Amber)	AR
20	116653-1	Shim - Clamp (.002" Thk., Red)	AR
21	116653-2	Shim - Clamp (.003" Thk., Green)	AR
22	291587-2	Support - Bowl (ML-33220 & ML-33221)	1
23	78061	Clamp - Bowl Retaining (ML-33220 & ML-33221)	4
24	116654-1	Shim - Support Shaft (.003" Thk., Green)	AR
25	116654-2	Shim - Support Shaft (.005" Thk., Blue)	AR
26	116654-3	Shim - Support Shaft (.010" Thk., Brown)	AR
27	88417	Pin - Bowl Stop (ML-33220 & ML-33221)	1
28	116627	Shaft - Bowl Support	1
29	12430-43	Key	1
30	116647	Spacer - Bowl Drive Shaft	1
31	116625	Gear - Bowl Drive (40T)	1
32	WL-12-4	Lock Washer - N.D. #W-03	1
33	NS-34-4	Lock Nut - N.D. #N-03	1
34	BN-2-8	Needle Bearing - Torrington #B-108	1
35	116623	Case - Gear	1
36	77349	Worm - Bowl Drive (1T)	1
37	116658	Seal - Bowl Drive	1
38	RR-4-18	Retaining Ring	1
39	WS-10-1	Washer	1
40	BB-5-30	Ball Bearing - N.D. #Z99503	1
41	RR-7-8	Retaining Ring	1
42	116626	Shaft - Bowl Drive	1
43	117507	Pulley - Bowl Drive (ML-18492 & ML-18595)	1
44	291588	Pulley - Bowl Drive (ML-33220 & ML-33221)	1
45	117503	"V" Belt (ML-18492 & ML-18595)	1
46	BV-13-21	"V" Belt (ML-33220 & ML-33221)	1
47	RP-3-14	Rollpin 3/16 Dia. x 7/8 Lg	1
48	RP-3-14	Rollpin 3/16 Dia. x 7/8 Lg	1
49	FP-28-42	Plug 1/8 Hex Soc. Hd. Pipe	1
50	SD-15-25	Self-Tapping Screw 1/4-20 x 5/8 Hex Washer Hd., Type TT	4
51	117107-1	Bowl & Adapter Assy. (ML-18492 & ML-18595)	1
52	116651	Cover - Bowl Support	1
53	SC-53-9	Mach. Screw 1/4-28 x 1/2 Truss Hd	3
54	116639	Clamp - Bowl Retaining (ML-18492 & ML-18595)	3
55	116653-3	Shim - Clamp (.001" Thk., Amber)	AR
56	116653-1	Shim - Clamp (.002" Thk., Red)	AR
57	116653-2	Shim - Clamp (.003" Thk., Green)	AR
58	16619	Support - Bowl (ML-18492 & ML-18595)	1
59	116660	Pin - Bowl Stop (ML-18492 & ML-18595)	1
60	SC-22-32	Mach. Screw 1/4-20 x 1/2 Flat Hd.	3

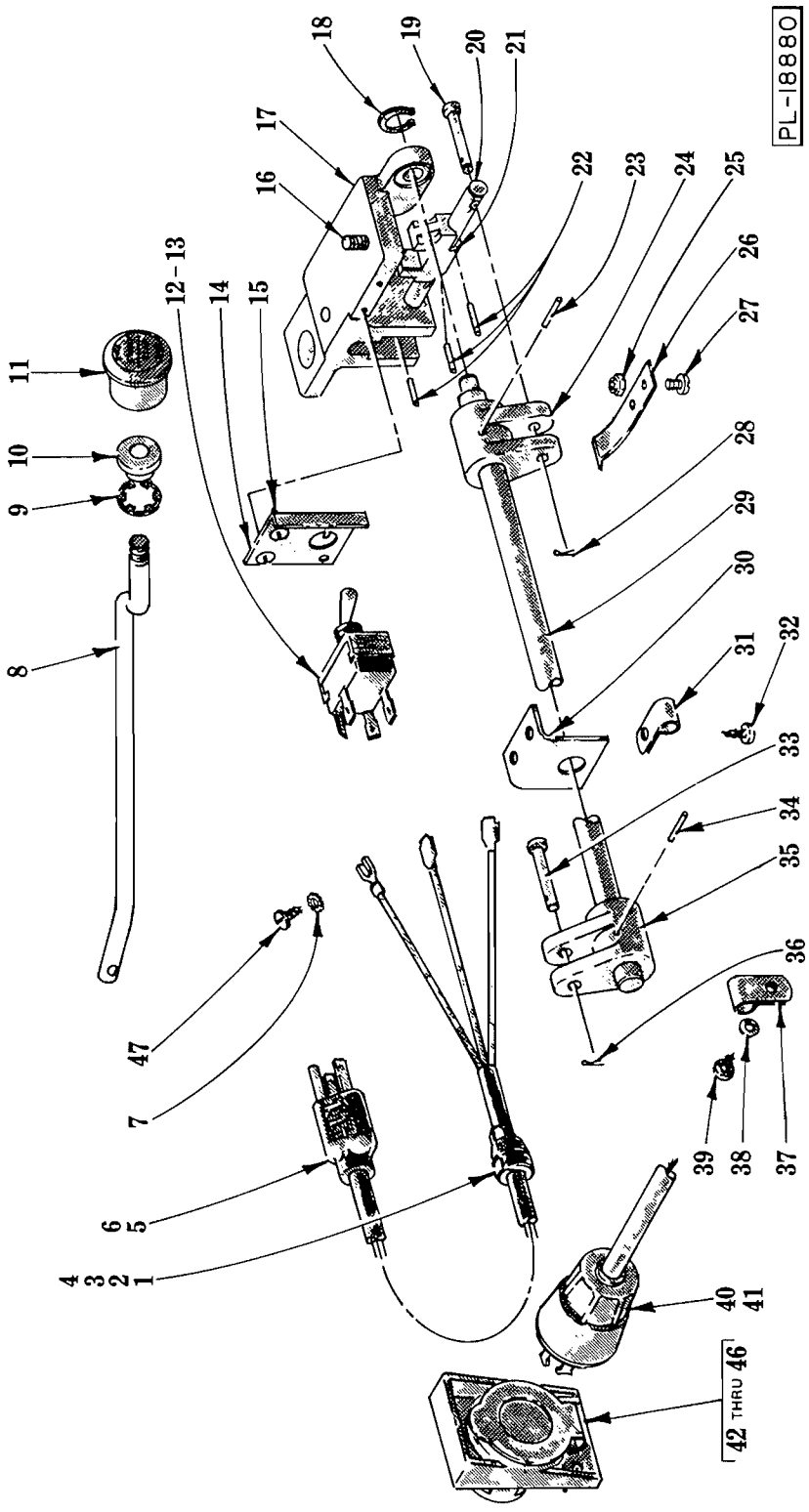
PL-18880
1
2
3
4
5
6
7
8
9
10
11
12-13
14
15
16
17
18
19
20
21
22
23
24
25
26
27
28
29
30
31
32
33
34
35
36
37
38
39
40
41
42 THRU 46
47

SWITCH UNIT

SWITCH UNIT

ILLUS. PL-18880	PART NO.	NAME OF PART[13]	AMT.
1	FE-7-21	Strain Relief (1 Ph.)	1
2	FE-15-38	Strain Relief (230/460 V., 60 Hz., 3 Ph.)	1
3	FE-8-21	Strain Relief (200 V., 60 Hz., 3 Ph.)	1
4	FE-14-47	Strain Relief (3 Ph.) (50 Hz.,)	1
5	117542-21	Cord & Plug Assy. (115 V., 50/60 Hz., 1 Ph.)	1
6	117542-22	Cord & PLug Assy. (230 V., 60 Hz., 1 Ph.)	1
7	WL-7-12	Lock Washer #10 Ext. Shakeproof	1
8	116755	Rod - Upper Switch Control	1
9	RR-4-17	Retaining Ring	1
10	117705	Bushing - Switch Rod	1
11	120126	Pull Knob & Label Assy	1
12	87711-148-1	Switch (1 Ph.)	1
13	87711-140-1	Switch (3 Ph.)	1
14	116759	Bracket - Switch Mounting	1
15	SD-24-44	Self-Tapping Screw 10-24 x ½ Phil. Pan Hd., Type TT	2
16	SD-15-25	Self-Tapping Screw ¼-20 x ⅝ Hex Washer Hd., Type TT	2
17	121844	Frame - Switch Interlock	1
18	RR-7-10	Retaining Ring	1
19	77390	Pin - Clevis	1
20	116640-1	Shaft - Switch Interlock	1
21	118953	Block - Switch Actuator	1
22	RP-2-12	Rollpin ⅛ Dia. x ½ Lg	3
23	RP-2-36	Rollpin ⅛ Dia. x 1 Lg	1
24	116713	Clevis (Switch Frame End)	1
25	NS-31-3	Stop Nut 6-32 "Elastic"	2
26	117636	Spring	1
27	SC-25-23	Mach. Screw 6-32 x ¼ Bind. Hd	2
28	PC-3-23	Cotter Pin 1/16 x ½	1
29	121843	Shaft - Switch Control	1
30	117633	Bracket - Switch Control Rod	1
31	78752-4	Clamp	1
32	SD-15-4	Self-Tapping Screw 10-24 x ½ Pan Hd., Type TT	2
33	77390	Pin - Clevis	1
34	RP-2-36	Rollpin ⅛ Dia. x 1 Lg	1
35	116713	Clevis (Switch Rod End)	1
36	PC-3-23	Cotter Pin 1/16 x ½	1
37	78752-4	Clamp	1
38	WS-2-12	Washer	1
39	SD-24-13	Self-Tapping Screw 8-32 x ⅜ Pan Hd., Type TT	1
40	122292-3	Cord & Plug Assy (200 V., 60 Hz., 3 Ph.)	1
41	117612-5	Cord & Plug Assy. (230 V., 60 Hz., 3 Ph.)	1
42	123816-3	Receptable & Cover Assy. (200 V., 60 Hz., 3 Ph.)	1
43	123805-3	Connector & Cover Assy. (200 V., 60 Hz., 3 Ph.)	1
44	117631-3	Receptacle (200/230 V., 60 Hz., 3 Ph.)	1
45	117625-3	Connector - Pendent (200/230 V., 60 Hz., 3 Ph.)	1
46	117625-2	Connector - Pendent (460 V., 60 Hz., 3 Ph.)	1
47	SD-24-1	Self-Tapping Screw 10-24 x ⅜ Pan Hd., Type TT	1
	121848-1	Frame & Switch Assy. (60 Hz., 1 Ph.) (Incls. items 12, 13, 14 & 17)	1
	121848-2	Frame & Switch Assy. (60 Hz., 3 Ph.) (Incls. items 12, 13, 14 & 17)	1
	117612-7	Cord & Plug Assy. (460 V., 60 Hz., 3 Ph.) (Not Shown)	1
	117631-2	Receptacle (460 V., 60 Hz., 3 Ph.) (Not Shown)	1
	117542-25	I.E.C. Cord (Not Shown)	1

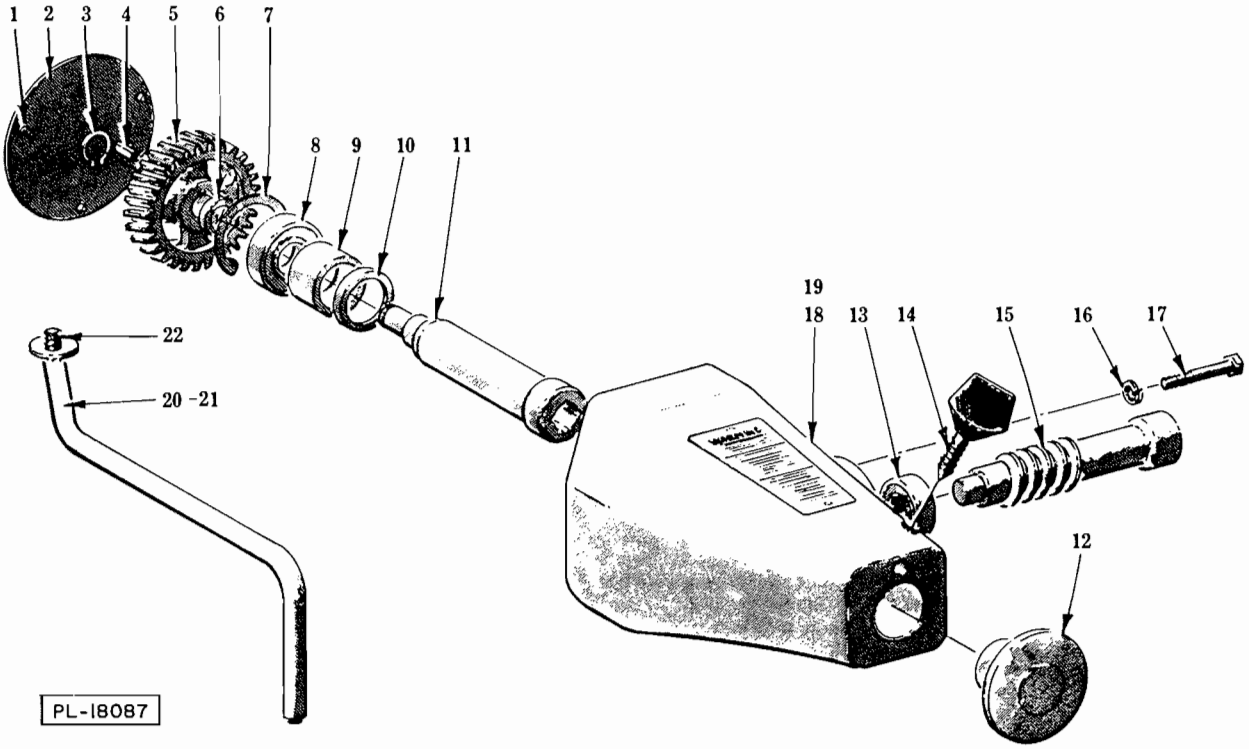

ATTACHMENT HUB & EXTENSION FOOT
D-117100-1 (MACH. WITH 4 INCH LEGS) (DOMESTIC)
D-117110-2 (MACH. WITH 4 INCH LEGS) (EXPORT)
D-117100-3 (MACH. WITH 3 INCH LEGS) (DOMESTIC)
D-117100-4 (MACH. WITH 3 INCH LEGS) (EXPORT)

ILLUS. PL-18087	PART NO.	NAME OF PART 13	AMT.
1	SC-53-2	Mach. Screw 10-24 x ½ Truss Hd	3
2	116641	Plate - Back (Attachment Hub)	1
3	RR-4-18	Retaining Ring	1
4	12430-44	Key	1
5	116630	Gear - Attachment Drive (33T)	1
6	116652	Spacer - Gear	1
7	RR-7-7	Retaining Ring	1
8	BB-18-43	Ball Bearing - Hoover #6204	1
9	83440	Bearing (Oil-less)	1
10	70090	Seal - Oil	1
11	116629	Shaft - Attachment Hub Drive	1
12	114824-1	Plug - Attachment Hole	1
13	BB-5-16	Ball Bearing #202K	1
14	108197-2	Thumb Screw Assy	1
15	116631	Shaft - Worm	1
16	WL-3-44	Lock Washer 5/16 Medium	3
17	SC-40-74	Cap Screw 5/16-18 x 2 Hex Soc. Hd	3
18	118255-1	Attachment Hub (Domestic) (Incls. items 7, 8, 9 & 10)	1
19	118255-2	Attachmnt Hub (Export) (Incls. items 7, 8, 9 & 10)	1
20	117712-2	Extension Foot Assy. (Mach. with 3" Legs)	1
21	117712-1	Extension Foot Assy. (Mach. with 4" Legs)	1
22	119757	Shoulder Screw Assy	1