INSTRUCTIONS

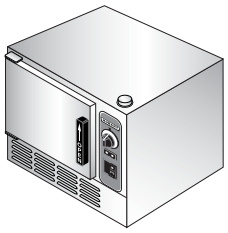

MODEL HC24EA SERIES ELECTRIC COUNTERTOP CONVECTION STEAMERS

ML-136041	*HC24EA3*	*208/240 V.*	*9.25KW*	*PRO*
ML-136042	*HC24EA5*	*208/240 V.*	*15.75KW*	*PRO*
ML-136049	*HC24EA3*	*208/240 V.*	*8.5KW*	*BASIC*
ML-136050	*HC24EA3*	*480 V.*	*9.25KW*	*PRO*
ML-136051	*HC24EA3*	*480 V.*	*8.5KW*	*BASIC*
ML-136052	*HC24EA5*	*208/240 V.*	*15KW*	*BASIC*
ML-136053	*HC24EA5*	*480 V.*	*15.75KW*	*PRO*
ML-136054	*HC24EA5*	*480 V.*	*15KW*	*BASIC*

HOBART

701 S. RIDGE AVENUE
TROY, OHIO 45374-0001

1-888-4HOBART

www.hobartcorp.com

F-35432 (June 2006)

IMPORTANT FOR YOUR SAFETY

THIS MANUAL HAS BEEN PREPARED FOR PERSONNEL QUALIFIED TO INSTALL THIS EQUIPMENT, WHO SHOULD PERFORM THE INITIAL FIELD START-UP AND ADJUSTMENTS OF THE EQUIPMENT COVERED BY THIS MANUAL.

WARNING

IMPROPER INSTALLATION, ADJUSTMENT, ALTERATION, SERVICE OR MAINTENANCE CAN CAUSE PROPERTY DAMAGE, INJURY OR DEATH. READ THE INSTALLATION, OPERATING AND MAINTENANCE INSTRUCTIONS THOROUGHLY BEFORE INSTALLING OR SERVICING THIS EQUIPMENT.

IN THE EVENT OF A POWER FAILURE, DO NOT ATTEMPT TO OPERATE THIS DEVICE.

© HOBART, 2006

TABLE OF CONTENTS

IMPORTANT FOR YOUR SAFETY 2
INTRODUCTION 5
GENERAL 5
INSTALLATION 5
UNPACKING 5
INSTALLATION CODES AND STANDARDS 5
LOCATION 6
LEVELING FEET 6
LEVELING 6
ANCHORING STEAMER 6
STACKING STAND 6
ELECTRICAL CONNECTION 7
PLUMBING CONNECTIONS 8
Water Requirements 8
Water Treatment 8
Water Supply Connection 8
DRAIN CONNECTIONS 8
VENT HOOD 9
OPERATION 10
CONTROLS 10
Drain Handle (Basic model) 10
Main Power Switch Light (Professional model) 10
Ready Light (Professional model) 10
Cooking Light (Professional model) 10
Timer 10
START UP (BASIC MODEL) 10
OPERATION 11
Drain Handle 11
Timer 11
PREHEATING 11
STEAMING 11
SHUTDOWN 11
EXTENDED SHUTDOWN 11

TABLE OF CONTENTS (CONTINUED)

START UP (PROFESSIONAL MODEL) 11
OPERATION 12
Main Power Switch Light (Professional model) 12
Timer 12
Ready Light 12
Cooking Light 12
PREHEATING 12
STEAMING 12
SHUTDOWN 12
EXTENDED SHUTDOWN 12
CLEANING 13
COOKING COMPARTMENT DRAIN 13
DRAINING GENERATOR 13
COMPARTMENT 13
DOOR GASKET 13
LEAVE COMPARTMENT DOOR OPEN 13
GUIDELINES FOR MAINTAINING STAINLESS STEEL SURFACES 13
MAINTENANCE 15
WATER TREATMENT SYSTEM 15
REMOVAL OF LIME SCALE DEPOSITS 15
Professional model 15
Basic model 16
DOOR GASKET 17
DRAINING THE GENERATOR 17
COOKING HINTS 18
PREPARATION 18
Frozen Food Items 18
Acceptable Pan Sizes 18
COOKING GUIDELINES 18
PRODUCTS TO BE COOKED IN SOLID PANS 19
PRODUCTS TO BE COOKED IN PERFORATED PANS 20
TROUBLESHOOTING 22
SERVICE AND PARTS INFORMATION 23

INTRODUCTION

GENERAL

Hobart convection steamers are produced with quality workmanship and material. Proper installation, usage and maintenance will result in many years of satisfactory performance. It is suggested that you thoroughly read this entire manual and carefully follow all of the instructions provided.

The HC24EA3 and HC24EA5 convection steamers are single compartment, electric, pressureless steam cookers with an internal electric steam generator that maintains water temperature at approximately 195°F. The HC24EA3 is rated 8.5 KW (Basic model), and 9.25 KW (Professional model). The HC24EA5 is rated 15 KW (Basic) and 15.75 KW (Professional).

Model HC24EA3 can accommodate three 2 1/2" deep (6.4 cm) steam pans. Model HC24EA5 can accommodate five 2 1/2"deep (6.4 cm) steam pans. The HC24EA3 and HC24EA5 electric convection steamers are designed for cooking vegetables, eggs, and other foods, in commercial kitchens. The steamer has a 0 to 60 minute timer. The steamers are designed for countertop installation.

INSTALLATION

Before installing, verify that the electrical supply agrees with the specifications on the data plate located on the back panel. If the supply and equipment requirements do not agree, do not proceed with the installation. Contact your dealer or Hobart immediately.

This unit is shipped pre wired for 208/60/3. 240v & single phase operation require changes to the heater connection 240/60/3, 240/60/1 and 208/60/1. This unit will operate at 60Hz or 50Hz.

UNPACKING

This steamer was inspected before leaving the factory. The transportation company assumes full responsibility for safe delivery upon acceptance of the shipment. Immediately after unpacking, check for possible shipping damage. If steamer damage is found, save the packaging material and contact the carrier within 15 days of delivery.

INSTALLATION CODES AND STANDARDS

In the United States, the Hobart steamer must be installed in accordance with:

1. State and local codes.
2. National Electrical Code (ANSI/NFPA No.70, latest edition) available from the National Fire Protection Association, Batterymarch Park, Quincy, MA 02269.
3. *Vapor Removal from Cooking Equipment,* (NFPA-96, latest edition) available from NFPA.

In Canada, the Hobart steamer must be installed in accordance with:

1. Local codes.
2. Canadian Electrical Code (CSA C22.2 No.3, latest edition) available from the Canadian Standards Association, 5060 Spectrum Way, Mississauga, Ontario, Canada L4W 5N6.

LOCATION

Allow space for plumbing and electrical connections. Minimum clearance is 6" (15.2 cm) on the back for proper air circulation. Allow adequate access for operating and servicing the steamer (36" at the front of the steamer, 15" (38 cm) above the steamer and 18" (45.7 cm) on right side of steamer).

LEVELING FEET

This steamer is shipped with four 2" leveling feet. Optional 4" leveling feet are available. The 2" feet can be removed and the optional 4" feet can be threaded into holes on the bottom of the unit.

LEVELING

Using a spirit level in the bottom of the steamer, adjust the leveling feet or the feet on the adjustable legs to level the steamer side to side with a slight tilt front to back to allow for proper cavity draining. After the drain is connected, check for level by pouring water onto the floor of the compartment. All water should drain through the opening at the back of the compartment cavity.

Note: Steamer must be installed level side to side with a slight tilt front to back to allow for proper draining.

ANCHORING STEAMER

1. Place steamer in the desired location on the countertop and mark four corners. Remove the steamer and drill 1/2" holes as indicated in Figure 1.
2. Apply a bead of RTV or other NSF approved sealant around the bottom edge of the steamer. If anchoring the steamer, this bottom seal is necessary to meet NSF requirements.
3. Set steamer on countertop and bolt down securely with 3/8 -16 bolts (not supplied).

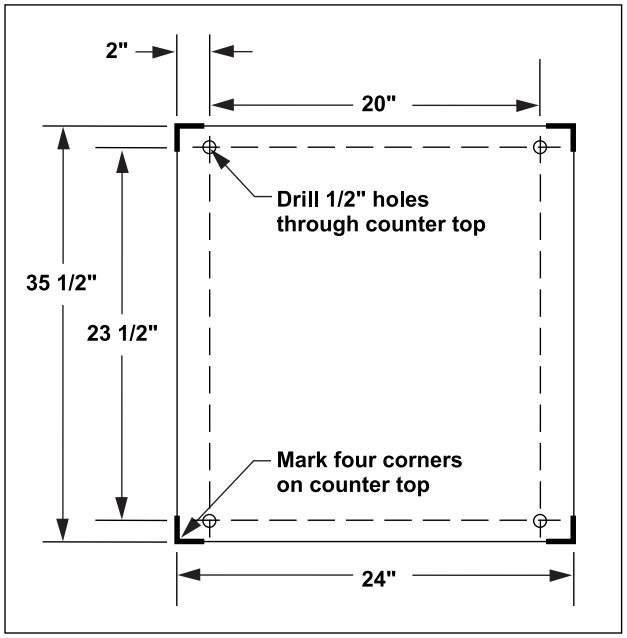

Figure 1.

STACKING STAND

Instruction to install convection steamers on stacking stand are included with the stacking stand.

ELECTRICAL CONNECTION

WARNING: ELECTRICAL AND GROUNDING CONNECTIONS MUST COMPLY WITH APPLICABLE PORTIONS OF THE NATIONAL ELECTRICAL CODE AND/OR OTHER LOCAL ELECTRICAL CODES.

The wiring diagram is located on the right side panel as you face the steamer. This steamer is hard wired.

Total KW	Volts	Hz	Ph	KW Per Phase			Rated Amps			Single Phase	Circuit Size Amps**	Fuse Size or Circuit Breaker Size* (Amps)
							3-Phase Amps per Line					
				L1-L2	L2-L3	L3-L1	L1	L2	L3			
8.5	208	50/60	1							40.87	60	60
8.5	240	50/60	1							35.42	50	50
8.5	208	50/60	3	4.25	2.12	2.12	26.54	26.54	17.70		35	35
8.5	240	50/60	3	2.83	2.83	2.83	20.50	20.50	20.50		30	30
8.5	480	50/60	3	2.83	2.83	2.83	10.30	10.30	10.30		15	15
9.25	208	50/60	1							43.57	60	60
9.25	240	50/60	1							38.54	50	50
9.25	208	50/60	3	4.25	2.69	2.12	26.54	28.88	20.04		40	40
9.25	240	50/60	3	2.83	3.58	2.83	20.45	23.15	23.15		30	30
9.25	480	50/60	3	2.83	3.58	2.83	10.21	11.57	11.57		15	15
15	208	50/60	1							72.12	90	90
15	240	50/60	1							62.50	75	75
15	208	50/60	3	7.50	3.75	3.75	46.84	46.84	31.23		60	60
15	240	50/60	3	5.00	5.00	5.00	36.08	36.08	36.08		50	50
15	480	50/60	3	5.00	5.00	5.00	18.04	18.04	18.04		25	25
15.75	208	50/60	1							74.82	95	95
15.75	240	50/60	1							65.63	85	85
15.75	208	50/60	3	7.50	4.31	3.75	46.84	49.18	33.57		65	65
15.75	240	50/60	3	5.00	5.75	5.00	36.08	38.79	38.79		50	50
15.75	480	50/60	3	5.00	5.75	5.00	18.04	19.40	19.40		25	25

2002 National Electric Code

*Dual Element Time-Delay Fuse or Inverse Time Circuit Breaker

** Circuit Size (minimum) & Fuse/Circuit Breaker Size (maximum) compiled in accordance with the National Electrical Code (ANSI/NFPA 70), 2002 Edition.

PLUMBING CONNECTIONS

WARNING: PLUMBING CONNECTIONS MUST COMPLY WITH APPLICABLE SANITARY, SAFETY AND PLUMBING CODES.

Water Requirements

Proper water quality can improve the taste of the food prepared in the steamer, reduce liming in the steam generator and extend equipment life. Water conditions vary from one location to another. Ask your municipal water supplier for details about your local water supply prior to installation. Presence of sediment, silica, excess chlorides or other dissolved solids may lead to a recommendation for alternate form(s) of water treatment. Test the water with the test strip included with the steamer. Other factors affecting steam generation are iron content, amount of chloridation and dissolved gases.

Water Treatment

A local water treatment specialist should be consulted before installation of steam generating equipment.

Supply Pressure	20 - 60 psig
Hardness*	No more than 3 grains
Silica	less than 13 ppm
Total Chlorine	less than 4.0 ppm
PH range	6.5 - 8
Undissolved Solids	less than 5 microns
*17.1 ppm = 1 grain of hardness	

If the water supply fails to meet these standards, it will be necessary to install a water conditioner on the generator water feed. The use of strainers or filters will not remove minerals from the water.

Water Supply Connection

Connect the treated cold water supply line to the 3/4" (19 mm) (male hose thread) inlet. Connect the untreated cold water supply line to the 3/4" (19 mm) (male hose thread) inlet marked UNTREATED WATER.

A water treatment system is recommended for the water supply line going to the treated water inlet. Follow the recommendations for use and installation instructions shipped with the water filter. If a water treatment system is not installed, the steam generator warranty may be limited.

A manual shutoff valve must be provided in a convenient location near the steamer.

DRAIN CONNECTIONS

The drain connection (Figure 2) must be 1 1/2" (38 mm) down, preferably with one elbow only, maximum length of 6' and piped to an open gap type drain.

CAUTION: In order to avoid any back pressure in the steamer, do not make a solid connection to any drain. FAILURE TO DO SO CAN DAMAGE THE STEAMER AND VOIDS THE WARRANTY.

A vent must be installed to avoid creating a vacuum or pressure in the cooking chamber.

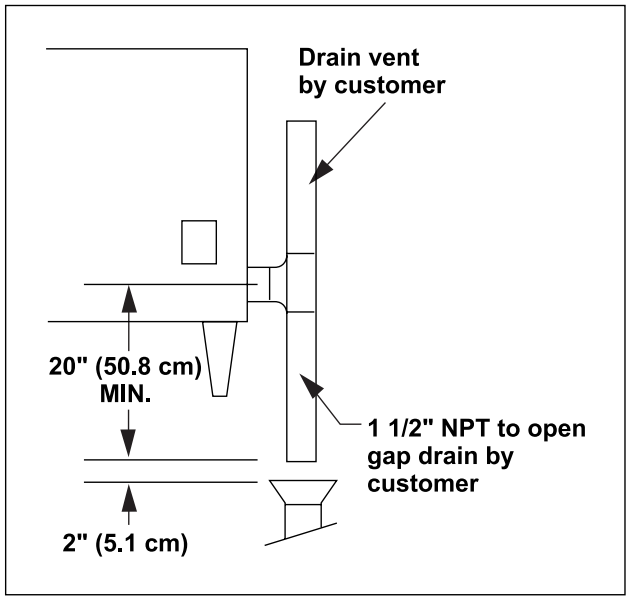

Figure 2

VENT HOOD

Local codes may require the steamer to be located under an exhaust hood. Information on the construction and installation of ventilating hoods may be obtained from *Vapor Removal from Cooking Equipment,* NFPA standard No. 96 (latest edition).

OPERATION

CONTROLS

Drain Handle (Basic model only)

Push the handle in to turn on the steamer. Pull the handle out to turn off and drain the steamer.

Note: Controls for the Basic and Professional models are shown in Figure 3.

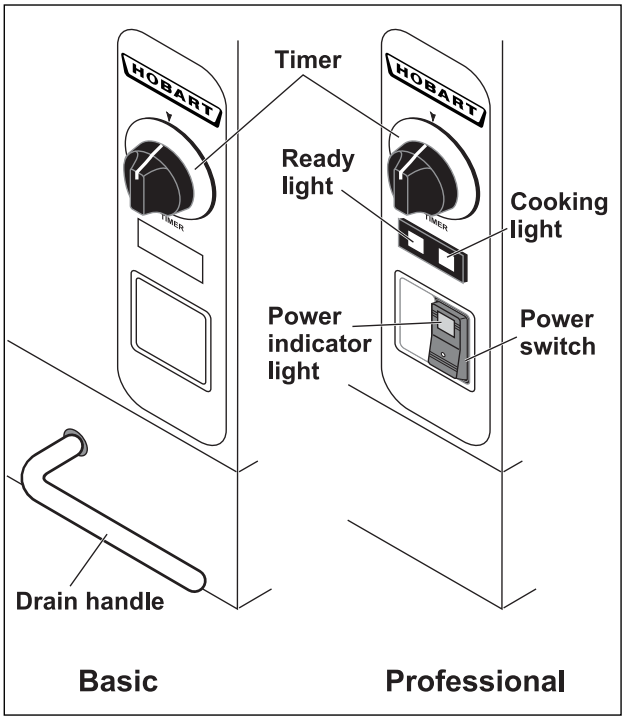

Figure 3

Main Power Switch Light (Professional model only)

ON The generator will automatically fill and begin heating to the preset temperature.

OFF The generator will drain, switch power light will turn off.

Ready Light (Professional model only)

The ready light indicates that the steamer is ready for the cooking cycle.

Cooking Light (Professional model only)

The cooking light indicates that the steamer is in the cooking cycle.

Timer

Set the cooking time (0 to 60 minutes). Steam cooking will begin when the door is closed. The cooking cycle will be interrupted if the door is open during the cooking cycle; resume cooking by closing the door.

When done, a buzzer sounds and steam stops being supplied to the cooking chamber. Turn the timer OFF to stop the buzzer.

START UP (BASIC MODEL)

WARNING: THE STEAMER AND ITS PARTS ARE HOT. USE CARE WHEN OPERATING, CLEANING OR SERVICING THE STEAMER. THE COOKING COMPARTMENT CONTAINS LIVE STEAM. STAY CLEAR WHILE OPENING THE DOOR.

Once the steamer is installed and all mechanical connections have been made, thoroughly test the steamer before operation.

1. Check that proper water, drain, and electrical connections have been made.
2. Open water valve.
3. Push handle in to turn the steamer on. Wait approximately 15-20 minutes.
4. Open the door and observe that no steam is entering the compartment.
5. Set the timer to the 5 minute position. Close the compartment door. Steam should be heard entering the compartment. Wait approximately 2-3 minutes.
6. Check drain line to ensure that water from the cold-water condensate valve is flowing through the drain line.
7. Open the compartment door and observe that steam supply to the compartment stops.

8. Close compartment door and let cooking cycle finish. When timer returns to 0, the buzzer will sound, signaling the end of the cooking cycle. To silence the buzzer, turn the timer dial to OFF.
9. To shut down the steamer, pull the handle to turn off and drain. Leave compartment doors slightly open to allow the inside to dry out.

OPERATION

Drain Handle

Push the handle in to turn the steamer on. Pull the handle out to turn off and drain the steamer.

Timer

Set to the desired cooking time. Timer range is 0-60 minutes.

When the timer reaches 0, the buzzer sounds and steam stops entering the cooking compartment. Turn the timer to the off position to stop the buzzer.

PREHEATING

Preheat the cooking compartment when the steamer is first used for the day, or whenever the compartment is cold.

Set the timer to 5 minutes. When the buzzer sounds, turn the timer to the OFF position. The steamer is ready to cook.

STEAMING

When the compartment is preheated, place pans of food into the cooking compartment and close the door.

Set the timer to the desired cooking time. At this point, the cooking cycle begins. Opening the door interrupts the cooking cycle. Close the door to resume cooking.

The buzzer will sound when the cooking cycle ends.

Turn the timer to the OFF position to silence the buzzer. Open the door and remove the cooked food.

SHUTDOWN

Pull drain handle until it stops. The power light will turn off before the handle stops. Leave the compartment door open to allow the inside to dry.

EXTENDED SHUTDOWN

To shut down for an extended period:

1. Pull drain handle to the OFF/DRAIN position.
2. Turn off the water and the main power supply.
3. Clean the compartment.
4. Disconnect power.

START UP (PROFESSIONAL MODEL)

WARNING: THE STEAMER AND ITS PARTS ARE HOT. USE CARE WHEN OPERATING, CLEANING OR SERVICING THE STEAMER. THE COOKING COMPARTMENT CONTAINS LIVE STEAM. STAY CLEAR WHILE OPENING THE DOOR.

Once the steamer is installed and all mechanical connections have been made, thoroughly test the steamer before operation.

1. Check that proper water, drain, and electrical connections have been made.
2. Open water valve.
3. Press the power switch to the ON position. Wait approximately 8-10 minutes.
4. Open the door and observe that no steam is entering the compartment, and that the ready light is ON and the cooking light is OFF.
5. Set the timer to the 5 minute position. Close the compartment door. The cooking light should now be lit and steam should be heard entering the compartment. Wait approximately 2-3 minutes.
6. Check drain line to ensure that water from the cold-water condensate valve is flowing through the drain line.
7. Open the compartment door and observe that steam supply to the compartment stops and that the cooking light is OFF.

8. Close compartment door and let cooking cycle finish. When timer returns to 0, the buzzer will sound, signaling the end of the cooking cycle. To silence the buzzer, turn the timer dial to OFF.
9. To shut down the steamer, turn off the power switch. Leave the compartment doors slightly open to allow the inside to dry out.

OPERATION

Main Power Switch

ON The power light will illuminate, and the generator will automatically fill and begin heating to the preset temperature.

OFF The power light will turn off, and the generator will drain.

Timer

Set to the desired cooking time, or set to the constant position. Timer range is 0-60 minutes.

When the timer reaches 0, the buzzer sounds and steam stops entering the cooking compartment. Turn the timer to the off position to stop the buzzer. If constant steam is selected, the steamer will steam continuously, and the timer will not time out.

Ready Light

The ready light indicates that the steamer is ready to cook.

Cooking Light

The cooking light indicates that the steamer is cooking.

PREHEATING

Preheat the cooking compartment when the steamer is first used for the day, or whenever the compartment is cold.

When the ready light is on, set the timer to 5 minutes. The cooking light will illuminate. When the buzzer sounds, turn the timer to the OFF position. The steamer is ready to cook.

STEAMING

When the compartment is preheated, place pans of food into the cooking compartment and close the door.

Set the timer to the desired cooking time. At this point, the cooking cycle begins. Opening the door interrupts the cooking cycle. Close the door to resume cooking.

The buzzer will sound when the cooking cycle ends.

Turn the timer to the OFF position to silence the buzzer. Open the door and remove the cooked food.

If the timer is set to constant steam, the steamer will steam continuously and the buzzer will not sound.

SHUTDOWN

Set the main power switch to the OFF position. The generator will automatically blow down. Leave the compartment door open to allow the inside to dry out.

Note: Power supplied to the steamer must remain on for 15 minutes after the main power switch is set to the OFF position. This will allow the blowdown cycle to complete.

EXTENDED SHUTDOWN

To shut down for an extended period:

1. Press the power switch to the OFF position.
2. Turn off the water and the main power supply.
3. Clean the compartment.
4. Disconnect power.

CLEANING



WARNING: DISCONNECT THE ELECTRICAL POWER TO THE MACHINE AND FOLLOW LOCKOUT / TAGOUT PROCEDURES BEFORE CLEANING.

COOKING COMPARTMENT DRAIN

Keep compartment drain running freely. Inspect compartment drains daily for blockage. Remove any particles or debris from the perforated strainer daily (or more often if needed).

After cooking greasy foods or seafood, close the door and operate the compartment for 25 to 30 minutes to flush any residual grease and oils down the compartment drain. Make a solution of warm water and non-chloride detergent and pour 1/2 gallon (1.9 liters) of it down the compartment drain. Rinse by pouring 1/2 gallon (1.9 liters) of hot water down compartment drain.

DRAINING GENERATOR

To prevent malfunction of controls and clogging, it is essential to drain the generator every day. This will flush out any accumulated minerals from the feed water. It will also aid in preventing internal scale buildup which would interfere with proper generator operation. Failure to drain the generator every day will void the steamer warranty. The presence of minerals in suspension is indicated by a murky or milky condition in the first portion of the water drained.

WARNING: THE WATER BEING DRAINED IS HOT AND UNDER PRESSURE. USE CARE WHEN CLEANING OR SERVICING THE GENERATOR.

After the generator has been in operation, turn the unit off with the power switch (Professional model) or drain handle (Basic model) located on cooking compartment to drain the generator. The generator will drain for approximately 15 minutes, removing sediment, scale and lime buildup in the generator.

COMPARTMENT

Wash the inside of the compartment with a solution of warm water and non-chloride detergent. Rinse with warm water.

Once a week, thoroughly clean the exposed surfaces (sides, front, door and top) with a damp cloth and polish with a clean cloth. To remove discolorations, use a nonabrasive cleaner.

DOOR GASKET

Clean the gasket sealing surface of the compartment door to remove food acids for maximum gasket life. Do not use any solvents or sharp instruments. Wash with a cloth moistened in a solution of mild detergent and warm water. Rinse with a fresh cloth moistened with warm water to remove all traces of detergent.

Wipe dry with a clean cloth. Never apply food oils or petroleum lubricants directly to the door gasket. Petroleum-based solvents and lubricants will reduce gasket life.

LEAVE COMPARTMENT DOOR OPEN

Leave the compartment door slightly open when the steamer is not in use. When the compartment is idle, never latch the door and apply pressure to the door gasket. Leaving the gasket under pressure can cause permanent deformation and reduce gasket life.

GUIDELINES FOR MAINTAINING STAINLESS STEEL SURFACES

There are four things that will break down stainless steel and allow corrosion to develop:

1) Abrasion

2) Deposits

3) Water

4) Chlorides

Avoid rubbing with steel pads, wire brushes or scrapers that can leave iron deposits on stainless steel. Instead, use plastic scouring pads or soft cloths. For stubborn stains, use products such as Cameo, Talc or Zud First Impression. Always rub parallel to the polish lines or with the grain.

Hard water will leave deposits that promote rust on stainless steel. Treated water from softeners or certain filters can eliminate these mineral deposits. Other deposits from food or lubrication must be properly removed by cleaning. Use mild detergent and non-chloride cleaners. Rinse thoroughly. Wipe dry. Where appropriate, apply a polish recommended for stainless steel (such as Benefit or Super Sheen) for extra protection and luster.

MAINTENANCE

WARNING: THE STEAMER AND ITS PARTS ARE HOT. USE CARE WHEN OPERATING, CLEANING OR SERVICING THE STEAMER. THE COOKING COMPARTMENT CONTAINS LIVE STEAM. STAY CLEAR WHEN OPENING DOOR.

WATER TREATMENT SYSTEM

A water treatment system is recommended for the steamer. Refer to your supplier's manual for normal maintenance procedures for proper scale-free operation.

REMOVAL OF LIME SCALE DEPOSITS

The steamer should be delimed when symptoms occur (see Troubleshooting Chart). This is in accordance with the minimum preventive maintenance schedule required by the Warranty.

WARNING: READ AND FOLLOW THE INSTRUCTIONS ON THE DELIMING MATERIAL PACKAGE. AVOID CONTACT WITH SKIN AND EYES. WEAR PLASTIC OR RUBBER GLOVES AND SAFETY GOGGLES WHEN HANDLING. WASH THOROUGHLY AFTER HANDLING. IF DELIMING SOLUTION COMES IN CONTACT WITH THE SKIN OR EYES, RINSE THOROUGHLY WITH CLEAN WATER.

WARNING: THE STEAMER AND ITS PARTS ARE HOT. USE CARE WHEN OPERATING, CLEANING OR SERVICING THE STEAMER. THE COOKING COMPARTMENT CONTAINS LIVE STEAM. STAY CLEAR WHEN OPENING DOOR.

Items Required (not provided)

- Deliming material
- Funnel
- Plastic or rubber gloves
- Safety goggles or face shield
- Measuring cup
- 1-gallon container for mixing deliming solution
- Petrol-Gel Lubricant or equivalent food-grade grease for coating deliming port threads

Note: Deliming solution may cause the surface of aluminum measuring tools to tarnish or etch.

Professional Model (Automatic Drain)

Note: This procedure is not intended to take the place of a water treatment program.

1. Turn power switch OFF. Wait 15 minutes. See shutdown procedure for Professional Model.
2. Turn cooking timers to OFF.
3. Prepare deliming solution according to the instructions on the deliming material package. Follow all manufacturer's instructions.
4. Remove delime port cap on top of unit and insert funnel into delime port (Figure 4).

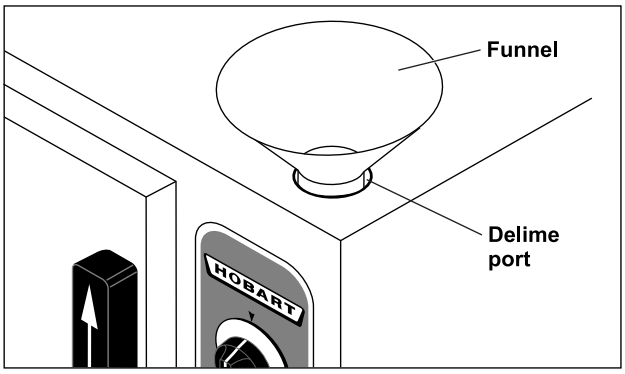

Figure 4

5. Pour deliming solution into the steam generator slowly to avoid spillage.
6. Remove funnel from delime port then rinse port with clean water.
7. Lightly coat delime port threads with Petrol-Gel then install delime port cap. Cap must be installed and tightened securely at all times.

8. Turn power switch ON.
9. When ready light comes on, turn cooking timer on for 3 minutes to delime the steam tubes and nozzles.
10. After 40 minutes, turn power switch OFF and allow steam generator to completely drain, 5 minutes.
11. Rinse steam generator with clean water:
    A. Turn power switch ON. When ready light comes on, turn cooking timer on for 3 minutes to rinse the steam tubes and nozzles.
    B. Turn power switch OFF and allow steam generator to completely drain.
    C. Turn cooking timer to OFF.
    D. Repeat steam generator rinse one time.
12. Clean exterior and interior using a mild solution of soap and water. Rinse with clean water then dry with a soft cloth.
13. Leave compartment door open when not in use.
14. The steamer is ready for operation or shutdown.

Basic Model (Manual Drain Lever)

Note: This procedure is not intended to take the place of a water treatment program.

1. Pull drain lever out to open generator drain and turn unit off. Wait 5 minutes for steam generator to completely drain.
2. Turn cooking timer to OFF.
3. Prepare deliming solution according to the instructions on the deliming material package. Follow all manufacturer's instructions.
4. Remove delime port cap on top of unit and insert funnel into delime port.
5. Lightly coat delime port threads with Petrol-Gel.
6. Push drain lever in to close the drain valve and turn the unit on.
7. Pour deliming solution into the steam generator slowly to avoid spillage.
8. Immediately remove funnel from delime port then rinse port with clean water.
9. Immediately install delime port cap. Cap must be installed and tightened securely at all times.

Note: Steps 6, 7, 8 and 9 must be completed within a 5-minute time period.

10. After 30 minutes, turn cooking timer on for 3 minutes to delime the steam tubes and nozzles.
11. After 50 minutes, pull drain lever out to turn the unit off and allow steam generator to completely drain, 5 minutes.
12. Rinse steam generator with clean water:
    A. Push drain lever in to close drain and turn power on. Wait 20 minutes then turn cooking timer on for 30 seconds to rinse the steam tubes and nozzles.
    B. Pull drain lever in and allow steam generator to completely drain.
    C. Turn cooking timer to OFF.
    D. Repeat steam generator rinse one time.
13. Clean exterior and interior using a mild solution of soap and water. Rinse with clean water then dry with a soft cloth.
14. Leave compartment door open when not in use.
15. The steamer is ready for operation or shutdown.

DOOR GASKET

If the door gasket is leaking due to a nick or cut, it must be replaced. Damage to the gasket sealing surface will cause steam leakage.

DRAINING THE GENERATOR

Drain the generator at the end of each day to flush out minerals and minimize scale build-up. The generator drains automatically for approximately 15 minutes after the power switch is turned OFF on the Professional model, or the drain handle is pulled on the Basic model.

COOKING HINTS

The steamer efficiently cooks vegetables and other foods for immediate serving. Steam cooking should be carefully time controlled. Keep hot food holding-time to a minimum to produce the most appetizing results. Prepare small batches. Cook only enough to start serving, then cook additional amounts to meet demand.

PREPARATION

Prepare vegetables, fruits, meats, seafood and poultry normally by cleaning, separating, cutting, removing stems, etc. Cook root vegetables in a perforated pan. Other vegetables may be cooked in a perforated pan unless juices are being saved. Liquids can be collected in a solid 12" x 20" pan placed under a perforated pan.

Perforated pans are used for frankfurters, wieners and similar items when juices do not need to be preserved. Solid pans are good for cooking puddings, rice, and hot breakfast cereals. Vegetables and fruits are cooked in solid pans in their own juice. Meats and poultry are cooked in solid pans to preserve their juice or retain broth.

Canned foods can be heated in their opened cans (cans placed in 12" x 20" solid pans) or the contents may be poured into solid pans. DO NOT place unopened cans in the steamer.

Frozen Food Items

Separate frozen foods into smaller pieces to allow more efficient cooking.

Use a pan cover for precooked frozen dishes that cannot be cooked in the covered containers in which they are packed if they require more than 15 minutes of cooking time. When a cover is used, approximately one-third additional cooking time is necessary.

Cooking time for frozen foods depends on the amount of defrosting required. If time permits, allow frozen foods to partially thaw overnight in a refrigerator. This will reduce their cooking time.

Acceptable Pan Sizes

The steamer accommodates combinations of full, half and one-third size pans, solid or perforated.

Model	Number of Pans Accommodated			
	Depth of Pan			
	1"	2 1/2"	4"	6"
HC24EA3	6	3	2	1
HC24EA5	10	5	3	2

COOKING GUIDELINES

The steamer cooks vegetables, frankfurters, eggs in their shells, and certain other meats or food items at atmospheric pressure.

These cooking guidelines are suggestions only. You should experiment with your food products to determine the cooking times that will give you the best results. Variables which affect cooking time include size, weight, thickness of foods, temperature, density, previous condition of the foods (fresh, pre-blanched or frozen) and degree of doneness desired.

PRODUCTS TO BE COOKED IN SOLID PANS

PRODUCT	TIME (MINUTES)	WEIGHT PER PAN
Eggs, Scrambled	9 - 12	8 Doz.
Rice, Long Grain (Cover with 4 cups water/lb.)	23 - 25	2 Lb.
Pasta (Place perforated pan inside solid pan, cover with cold water)		
Spaghetti – Regular/Vermicelli	10 - 15	
Macaroni - Shells/Elbows	13 - 18	
Noodles - 1/2" Wide	10 - 15	
Lasagna Noodles	13 - 18	
Frozen Casseroles, Lasagna	33 - 35	Full Pan
Meat Loaf, 3-5 Lb. Each	38 - 40	15 Lb.
Beef		
Ground Chuck	19 - 25	10 Lb
Sliced as Purchased	33 - 40	10 Lb.
Shrimp, Frozen, 10 Shrimp per Lb.	4 - 5	4 Lb.
Beans		
Baked	8 - 9	10 Lb. Can
Refried	8 - 9	10 Lb. Can
Canned Vegetables	5 - 6	10 Lb. Can
Prunes, Dried	11 - 15	

PRODUCTS TO BE COOKED IN PERFORATED PANS

PRODUCT	TIME (MINUTES)	WEIGHT PER PAN
SEAFOOD		
Clams		
Frozen	9 - 12	3 Doz.
Fresh, Cherrystone	4 - 6	3 Doz.
King Crab, Frozen		
Claws	3 - 4	2 1/2 Lb.
Legs	3 - 6	4 1/2 Lb.
Lobster Tail, Frozen	5 - 6	10 Lb.
Lobster, Live, 10" - 12"	4 - 5	4 Per Pan
Salmon Fillets, Frozen, 8 ounce each	4 - 5	7 1/2 Lb.
Scallops, Fresh	3 - 4	3 Lb.
Scrod Fillets, Fresh	3 - 5	4 Lb.
EGGS		
Hard Cooked	14 - 15	4 Doz.
Soft Cooked	8 - 10	4 Doz.
Soft Yoke for Caesar Salad	5 - 8	4 Doz.
MEATS		
Chicken — Breasts, Legs, Thighs	19 - 20	15 Lb.
Turkey, Frozen		
Breasts (2)	86 - 90	6 to 7 Lb. Each
Cut Lengthwise	53 - 55	20 to 25 Lb.
Corned Beef	40 - 75	6 to 8 Lb.
Hot Dogs and Wieners	2 - 3	80 to 100 Count
VEGETABLES		
Asparagus Spears		
Frozen	10 - 12	3 Lb.
Fresh	4 - 5	5 Lb.
Beans		
Green 2" Cut, Frozen/Fresh	5 - 6	5 Lb.
Lima, Frozen	7 - 8	5 Lb.
Baby Lima, Frozen	4 - 5	5 Lb.
Brussel Sprouts, Frozen	5 - 6	5 Lb.

PRODUCT	TIME (MINUTES)	WEIGHT PER PAN
VEGETABLES (Cont'd.)		
Broccoli		
Spears, Frozen	6 - 8	4 Lb.
Spears, Fresh	4 - 6	5 Lb.
Flowerettes, Frozen	4 - 6	5 Lb.
Cabbage, Fresh, 1/6 Cut	6 - 8	5 Lb.
Carrots		
Baby Whole, Frozen	6 - 8	7 Lb.
Crinkle Cut, Frozen	7 - 8	4 Lb.
Sliced, Fresh	9 - 11	9 Lb.
Cauliflower, Flowerettes		
Frozen	4 - 6	4 Lb.
Fresh	7 - 8	5 Lb.
Celery, 1" Diagonal Cut	5 - 7	5 Lb.
Corn		
Yellow Whole Kernel, Frozen	3 - 5	5 Lb.
Cobbettes, Frozen	6 - 8	27 Ears
Corn-On-Cob, Fresh	16 - 18	80 Ears
	16 - 18	54 Ears
	10 - 12	18 Ears
Peas, Green	4 - 6	5 Lb.
Potatoes, Whole Russet	50 - 55	40 Lb.
Spinach		
Chopped, Frozen	15 - 17	6 Lb.
Defrosted	4 - 5	6 Lb.
Fresh Cut	2 - 3	2 Lb.
Squash, Acorn Halves	22 - 25	10 Halves
Zucchini, Slices	6 - 8	10 Lb.
Frozen Mixed Vegetables	6 - 7	5 Lb.
FRUIT		
Fruit, Blanch for Peeling		
Grapefruit, Oranges	2 - 3	
Pineapple, Whole for Cutting	2 - 4	

TROUBLESHOOTING

SYMPTOMS	POSSIBLE CAUSES	REMEDY
Steamer not steaming	No main power source	Check the power source.
	Power switch in OFF position (Professional)	Set power switch to the ON position.
	Handle out (OFF) position (Basic)	Push handle in.
	Water not being supplied to steamer	Refer to symptom WATER NOT BEING SUPPLIED TO STEAMER.
Steamer not heating/ steaming properly	Excessive lime build up in the steamer	Descale the steamer (see REMOVAL OF LIME SCALE DEPOSITS).
Door leaks	Damaged door gasket	Check door gasket for damage. If adjustment is needed, contact your Local Hobart Servicer.
	Improper drain	
	Plugged drain	
	Damage to gasket sealing surface	
Water accumulates in compartment	Plugged drain or screen	Clear compartment cavity screen. If symptom persists, contact your Local Hobart Servicer.
	Unit not leveled properly	See leveling instructions in the installation section of this manual.
	Drain clogged	Unclog drain.
Water not being supplied to steamer	Water supply valve is off	Turn valve on.
	Water pressure low	Check water supply pressure.
	Water filter is plugged	Refer to water filter manual. If symptom persists, contact your Local Hobart Servicer.
	Valve inlet screen clogged	Contact your Local Hobart Servicer.

SERVICE AND PARTS INFORMATION

To obtain service and parts information concerning this steamer, contact the local Hobart Service office in your area, or call 1-888-4HOBART. Parts and service are also available at www.hobartcorp.com.