Pressure Fryers



INSTRUCTIONS

MODEL HP15G & HP15GF GAS PRESSURE FRYERS

MODELS

HP15G	*ML-114793*
HP15GF	*ML-114790*

HOBART CORPORATION

EXECUTIVE OFFICES
701 RIDGE AVENUE
TROY, OHIO 45374-0001

FORM 33691 (2-97)

IMPORTANT FOR YOUR SAFETY

THIS MANUAL HAS BEEN PREPARED FOR PERSONNEL QUALIFIED TO INSTALL GAS EQUIPMENT, WHO SHOULD PERFORM THE INITIAL FIELD START-UP AND ADJUSTMENTS OF THE EQUIPMENT COVERED BY THIS MANUAL.

POST IN A PROMINENT LOCATION THE INSTRUCTIONS TO BE FOLLOWED IN THE EVENT THE SMELL OF GAS IS DETECTED. THIS INFORMATION CAN BE OBTAINED FROM THE LOCAL GAS SUPPLIER.

IMPORTANT

IN THE EVENT A GAS ODOR IS DETECTED, SHUT DOWN UNITS AT MAIN SHUTOFF VALVE AND CONTACT THE LOCAL GAS COMPANY OR GAS SUPPLIER FOR SERVICE.

FOR YOUR SAFETY

DO NOT STORE OR USE GASOLINE OR OTHER FLAMMABLE VAPORS OR LIQUIDS IN THE VICINITY OF THIS OR ANY OTHER APPLIANCE.

WARNING

IMPROPER INSTALLATION, ADJUSTMENT, ALTERATION, SERVICE OR MAINTENANCE CAN CAUSE PROPERTY DAMAGE, INJURY OR DEATH. READ THE INSTALLATION, OPERATING AND MAINTENANCE INSTRUCTIONS THOROUGHLY BEFORE INSTALLING OR SERVICING THIS EQUIPMENT.

IN THE EVENT OF A POWER FAILURE, DO NOT ATTEMPT TO OPERATE THIS DEVICE.

© HOBART CORPORATION, 1997

TABLE OF CONTENTS

GENERAL 4

INSTALLATION 4
- Unpacking 4
- Location 5
- Installation Codes and Standards 5
- Assembly 5
  - Legs 5
  - Casters 6
  - Exhaust Pipe 7
  - Filter Tank (Model HP15GF) 7
- Gas Connections 8
- Testing the Gas Supply System 8
- Flue Connections 8
- Electrical Connections 8
- Lighting Instructions 9

OPERATION 10
- Before First Use 10
- Controls 10
- Filling the Kettle with Liquid Shortening 11
- Turning the Fryer On 11
- Frying Procedure for All Foods 12
- Turning the Fryer Off 13
- Automatic Shutoff 13
- High Limit Switch 13
- Power Failure 13
- Pressure Relief Valve 14
- Suggested Cooking Guide 14
- Draining and Filtering Oil 15
  - Using the HOF40 Portable Filter 15
  - Using a Power Filter Device from Another Manufacturer 15
  - Model HP15G Pressure Fryer (Without Built-In Oil Filter) 15
  - Model HP15GF Pressure Fryer (With Built-In Oil Filter) 18
  - Cleaning the Filter 19
- Cleaning 20

MAINTENANCE 26
- Lid O-Ring Seal Replacement 26
- Other O-Ring Seal Replacements 26
  - Kettle Pressure Regulator Assembly 26
  - Cleaning Port Plug Screw 27
- Vent 27

TROUBLESHOOTING 28

Installation, Operation and Care of MODEL HP15G & HP15GF GAS PRESSURE FRYERS

SAVE THESE INSTRUCTIONS FOR FUTURE USE

GENERAL

Your Hobart Gas Pressure Fryer will produce uniform, high quality product time after time. It operates at a low temperature (325°F) and high pressure (14 psi). Rapid cooking time increases production and improves energy efficiency, and high pressure frying preserves food flavor and reduces shrinkage. Up to 15 pounds of product may be prepared at a time.

Standard equipment includes a drain pipe extension for the exhaust tank, wooden doughnut stick, $1^{1}/_{4}$" diameter exhaust pipe, solenoid open wrench, insulated mitts, and a flexible cleaning rod. Both legs and casters are supplied with each fryer. Extra O-ring seals for the lid, the kettle pressure regulator assembly and the cleaning port plug screw are also included. The O-ring seals are not covered under normal warranty.

Model HOF40 Filtering System for draining and filtering the oil for Model HP15G is available as an option.

IMPORTANT: Your pressure fryer must be cleaned frequently or it will not function properly. Follow the procedures in the CLEANING section of this manual.

INSTALLATION

When installing this pressure fryer, the base should remain open at the front to allow air circulation for the gas burner. DO NOT BLOCK THE FRONT OF THE FRYER.

Prior to installation, verify that the electrical and gas supply lines agree with the specifications on the fryer data plate, which is located on the inside of the door.

UNPACKING

Immediately after unpacking the pressure fryer, check it for possible shipping damage. If this fryer is found to be damaged, save the packaging material and contact the carrier within 15 days of delivery.

Do not use the door to lift or move the fryer.

LOCATION

The equipment area must be kept free and clear of combustible substances.

The pressure fryer, when installed, must have minimum clearance from combustible and non-combustible construction of 1" at the sides and 3" at the rear of the fryer. This fryer is for use on non-combustible floors only. It must be installed at least 12" away from open top flame units.

The installation location must allow adequate clearances for servicing and proper operation.

The pressure fryer must be installed so that the flow of combustion and ventilation air will not be obstructed. Adequate clearance for air openings into the combustion chamber must be provided. Make sure there is an adequate supply of air in the room to allow for combustion of the gas at the fryer burners.

Do not permit fans to blow directly at the pressure fryer. Wherever possible, avoid open windows next to the pressure fryer. Avoid wall-type fans which create air cross currents within the room.

INSTALLATION CODES AND STANDARDS

Hobart pressure fryers must be installed in accordance with:

In the United States

1. State and local codes.

2. National Fuel Gas Code, ANSI-Z223.1 (latest edition), available from The American Gas Association, Inc., 1515 Wilson Blvd., Arlington, VA 22209.

3. National Electrical Code ANSI/NFPA-70 (latest edition).

In Canada

1. Local codes.

2. CAN/CGA-B149.1 Installation for Natural Gas Burning Appliances and Equipment (latest edition).

3. CAN/CGA-B149.2 Installation for Propane Burning Appliances and Equipment (latest edition), available from The Canadian Gas Association, 55 Scarsdale Road, Don Mills, Ontario, Canada M3B 2R3.

4. Canadian Electrical Code Part 2, CSA Standard C22.1 (latest edition).

ASSEMBLY

The fryer must be restrained with adequate ties to prevent tipping when installed in order to avoid the splashing of hot liquid.

Legs

Use only the legs supplied with your pressure fryer.

Place the fryer on its side, being careful to avoid scratching the finish. Attach the 4 legs to the flanges on the bottom of the fryer.

Carefully raise fryer to its normal position and place it in the installing location.

Casters

Place the fryer on its side, being careful to avoid scratching the surface. Use only the casters supplied with your pressure fryer.

Thread the 4 casters to the flanges on the bottom corners of the fryer. Use the open-ended wrench supplied to tighten (apply wrench at the flat surfaces on leg extensions). The 2 locking casters mount at the front; the non-locking casters at the rear.

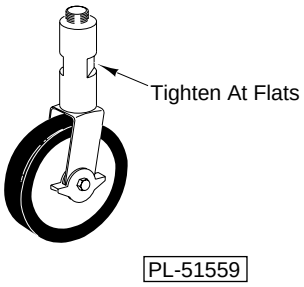

Fig. 1

For pressure fryers equipped with casters, the installation shall be made with a connector that complies with the Standard for Connectors for Movable Gas Appliances, ANSI Z21.69 (latest edition) and CGA 6.16 (latest edition), and a quick-disconnect device that complies with the Standard for Quick-Disconnect Devices for Use With Gas Fuel, ANSI Z21.41 (latest edition) and CAN1-6-9 (latest edition).

Provide a restraining device for the gas line to limit movement of the fryer without depending on the connector and any quick-disconnect device or its associated piping to limit fryer movement. Attach the restraint to the rear of the fryer (Fig. 2).

If disconnection of the restraint is necessary, turn off the gas supply before disconnection. Reconnect this restraint before turning the gas supply on and returning the pressure fryer to its original installation position.

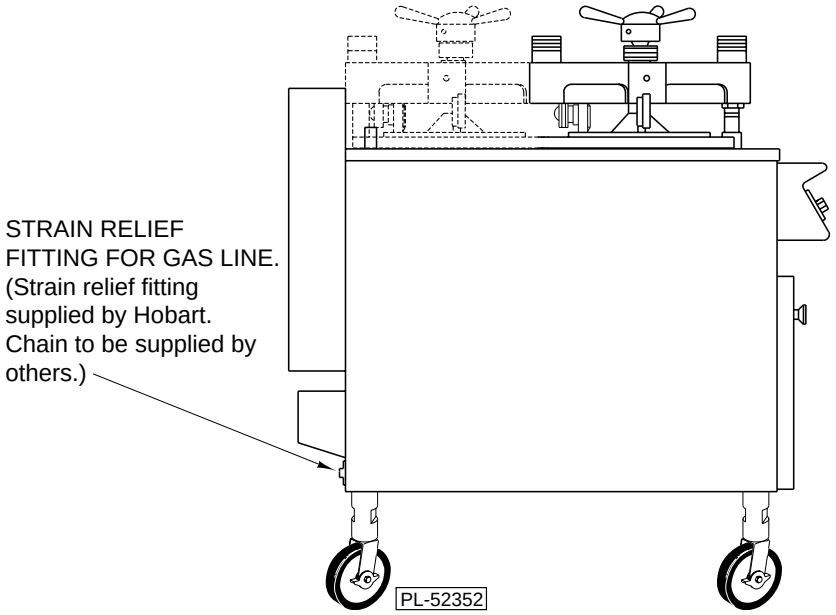

Fig. 2

Exhaust Pipe

Thread the 1¼" diameter exhaust pipe (supplied) to the top of the exhaust tank (Fig. 3) located at the rear of the fryer.

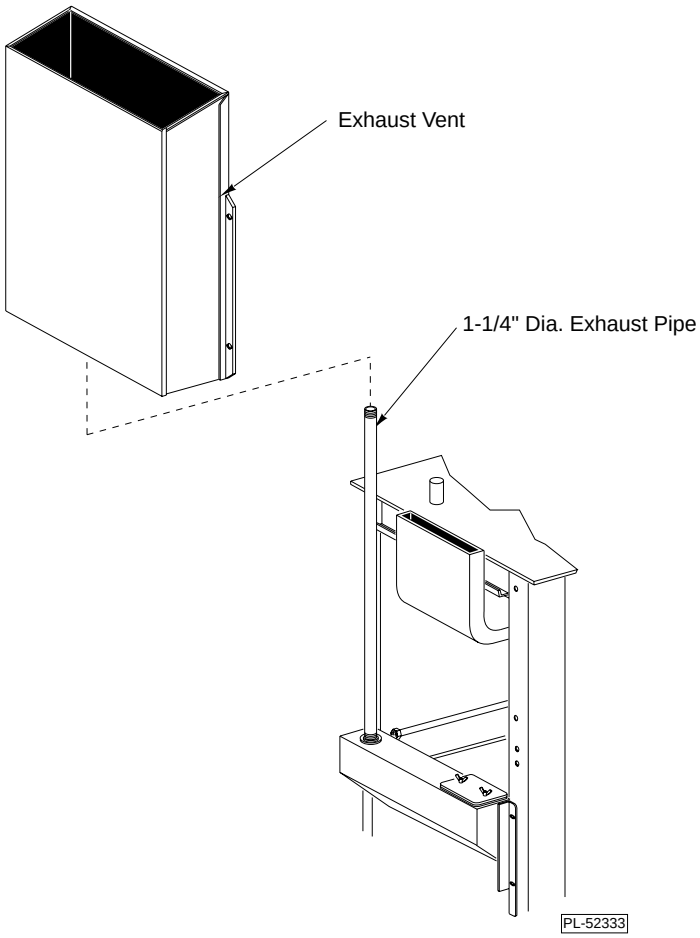

Fig. 3

Filter Tank (Model HP15GF) (Fig. 4)

Screw the wand/hold down plug assembly into the bottom of the filter tank. Place tank lid on top of filter tank. Slide the tank into the cabinet and over the locking pin. The locking pin is for positioning the tank. Pull tank forward until it rests against the locking pin. The opening will be centered under the fryer drain. Connect the quick-connect from the hose to the wand assembly.

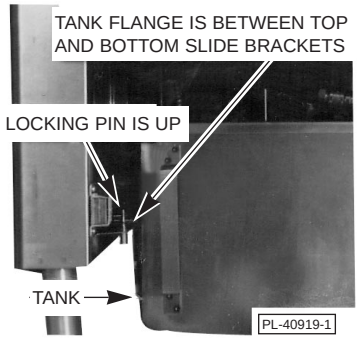

Fig. 4

GAS CONNECTIONS

All gas supply connections and any pipe joint compound used must be resistant to the action of liquified petroleum gases.

Location of the gas inlet is underneath the fryer on the left-hand side toward the rear.

Pipe gas supply to the fryer. Make sure the pipes are clean and free of obstructions, dirt, and piping compound.

Codes require that a gas shutoff valve be installed in the gas line ahead of the pressure fryer.

The orifices are set at 3.5" W.C. (Water Column) pressure for natural gas, and 11" W.C. (Water Column) pressure for propane gas. A manifold pressure regulator is supplied as part of the gas control valve. No adjustment should be required.

WARNING: PRIOR TO LIGHTING, CHECK ALL JOINTS IN THE GAS SUPPLY LINE FOR LEAKS. USE SOAP AND WATER SOLUTION. DO NOT USE AN OPEN FLAME.

After piping has been checked for leaks, all piping receiving gas should be fully purged to remove air.

Make certain primary air supply to the main burner is properly adjusted for complete combustion.

TESTING THE GAS SUPPLY SYSTEM

When test pressures exceed $^1/_2$ psig (3.45 kPa), the fryer and its individual shutoff valve must be disconnected from the gas supply piping system.

When test pressures are $^1/_2$ psig (3.45 kPa) or less, the fryer must be isolated from the gas supply piping system by closing its individual manual shutoff valve.

FLUE CONNECTIONS

This pressure fryer must be installed under a ventilating hood. From the termination of the fryer flue vent to the filters of the hood venting system, a minimum clearance of 18" must be maintained.

Do not obstruct the flow of flue gases from the flue duct located on the rear of the fryer. It is recommended that the flue gases be ventilated to the outside of the building through a ventilation system installed by qualified personnel.

Information on the construction and installation of ventilating hoods may be obtained from the standard for "Vapor Removal from Cooking Equipment," NFPA No. 96 (latest edition).

ELECTRICAL CONNECTIONS

WARNING: ELECTRICAL AND GROUNDING CONNECTIONS MUST COMPLY WITH THE APPLICABLE PORTIONS OF THE NATIONAL ELECTRICAL CODE AND/OR OTHER LOCAL ELECTRICAL CODES.

WARNING: APPLIANCES EQUIPPED WITH A FLEXIBLE ELECTRIC SUPPLY CORD ARE PROVIDED WITH A THREE-PRONG GROUNDING PLUG. IT IS IMPERATIVE THAT THIS PLUG BE CONNECTED INTO A PROPERLY GROUNDED THREE-PRONG RECEPTACLE. IF THE RECEPTACLE IS NOT THE PROPER GROUNDING TYPE, CONTACT AN ELECTRICIAN. DO NOT REMOVE THE GROUNDING PRONG FROM THIS PLUG.

If the fryer is not equipped with a grounding plug and electrical supply is needed, ground the fryer by using the ground lug provided at the rear (refer to the wiring diagram located on the inside of the fryer door panel).

Do not connect the fryer to electrical supply until after gas connections have been made.

Connect polarized plug to 110/125 volt, single phase, 60 cycle, 15 amp. polarized receptacle.

LIGHTING INSTRUCTIONS

1. Turn gas combination control valve (Fig. 5) (located at the rear of the fryer) clockwise to the OFF position.
2. Wait 5 minutes for unburned gas to vent.
3. Turn gas combination control valve counterclockwise to ON.
4. Turn gas valve ON (Fig. 6).
5. Turn power switch to ON.
6. If burner does not light, turn power switch, gas valve and gas combination control valve OFF and repeat Steps 2 through 5.

If burner flame is interrupted, the electronic igniter will automatically relight the burner.

EXHAUST VENT HAS BEEN REMOVED TO SHOW VALVE CLEARLY

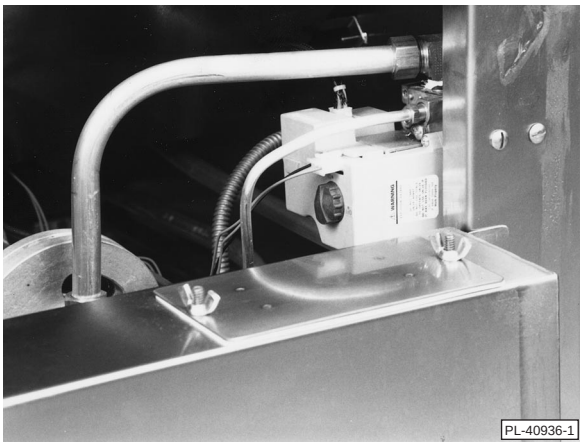

Fig. 5

GAS VALVE IN ON POSITION



Fig. 6

OPERATION

WARNING: HOT OIL AND PARTS CAN CAUSE BURNS. USE CARE WHEN OPERATING, CLEANING AND SERVICING THE FRYER.

WARNING: SPILLING HOT FRYING COMPOUND CAN CAUSE SEVERE BURNS. DO NOT MOVE FRYER WITHOUT DRAINING ALL FRYING COMPOUND FROM THE TANK.

When using this pressure fryer, the base should remain open at the front to allow air circulation for the gas burner. DO NOT BLOCK THE FRONT OF THE FRYER.

BEFORE FIRST USE

Clean the fryer with detergent or soap and warm water. Rinse thoroughly and drain. Wipe completely dry with a soft clean cloth.

Clean all fryer accessories. Rinse all parts thoroughly after cleaning and wipe dry.

CONTROLS (Fig. 7)

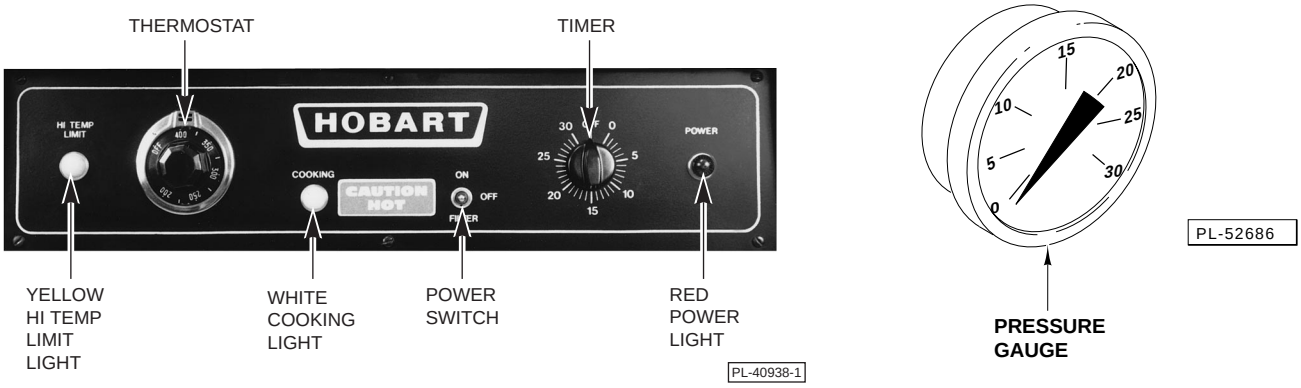

Model HP15GF

Fig. 7

Power Switch — Model HP15GF has a 3-position toggle switch: the upper position turns electric power on, the center position turns power off, and the lower position provides power for the filtering operation. Model HP15G has a 2-position toggle switch: the upper position turns electric power on, and the lower position turns power off.

Thermostat — Maintains frying temperature by controlling power supply. (Temperature ranges from 0 to 400°F.)

Red Power Light — Illuminates when power switch is placed in the ON position and power is supplied to the fryer.

White Cooking Light — Cycles on and off. ON indicates oil is below the set temperature and burner is providing heat to the fryer.

Yellow Hi Temp Limit Light — Illuminates when 450°F has been exceeded. Power is temporarily cut off to the fryer until the temperature is within normal limits.

Timer — Buzzes at the end of the cooking cycle until you manually turn timer to the OFF position. (Timer ranges from 0 to 30 minutes.)

Pressure Gauge — Indicates pounds per square inch internal kettle pressure.

FILLING THE KETTLE WITH LIQUID SHORTENING

Oil Capacity: 40 lb. (5 gal.).

Use only a pure vegetable hydrogenated oil prescribed for use in pressure fryers, such as Mel Fry, Crystal, FryMax, or Gold Label. Never add suet.

Close drain valve (Fig. 8). Fill kettle with **liquid shortening.**

- If you use a solid shortening, melt before filling kettle.
- If shortening is hot, fill kettle to oil level line (Fig. 9).
- If shortening is room temperature, fill kettle to 1/2" below the oil level line. This level allows for oil expansion when heated. **Do not overfill.**

Regularly add enough oil to keep the oil level in the kettle to the oil line.

When changing to new oil, keep the level 1/2" below the oil level line.



Fig. 8



Fig. 9

TURNING THE FRYER ON

CAUTION: Before turning the burner on, the kettle must be filled to the correct level with liquid shortening. If this is not done, the kettle walls can be damaged. Warpage can cause leaks.

To turn the fryer ON, place the power switch in the ON position and set the thermostat at 325°F. The burner will ignite and the white cooking light will glow, indicating that the burner is calling for heat. The white cooking light will glow when the oil is **below** the selected temperature. When oil reaches set temperature, the white cooking light goes out.

Before the first load of the day, it is recommended that you allow the fryer to cycle one time before loading food. When the white cooking light glows, wait until it goes out. When the white cooking light glows for the second time, allow it to go out a second time, then cooking may begin. Allow at least 45 minutes for this operation.

FRYING PROCEDURE FOR ALL FOODS

Pressure is created by the containment of moisture escaping from the product that is being fried. Dry products that produce little or no moisture will not create sufficient pressure to pressure fry that product. Pressure will not build without product in the kettle.

1. For the first cooking cycle of the day, make certain oil is at set temperature (white cooking light is not glowing). After the first cooking cycle of the day, product may be loaded whether the white cooking light is glowing or not.

2. Place fryer basket in hot oil. Be sure basket is submerged in the oil.

3. Using tongs or other long-handled utensil, place prepared foods into the basket, one piece at a time. Load food in a circular motion so the basket is loaded uniformly and evenly.

4. After loading 10-12 pieces of chicken, use the insulated mitts and lift the basket high enough to clear the bottom of the kettle. Swirl the basket a couple of times in the oil. This will keep pieces from sticking together.

5. When the desired amount of food is placed in the pressure fryer, give the basket one more swirl in the oil. Close the lid. **Make sure the lock post is fastened in the overarm post catch (Fig. 10).** Tighten the handle.

WARNING: IF THE LID WILL NOT LOCK, DO NOT OPERATE THE FRYER.

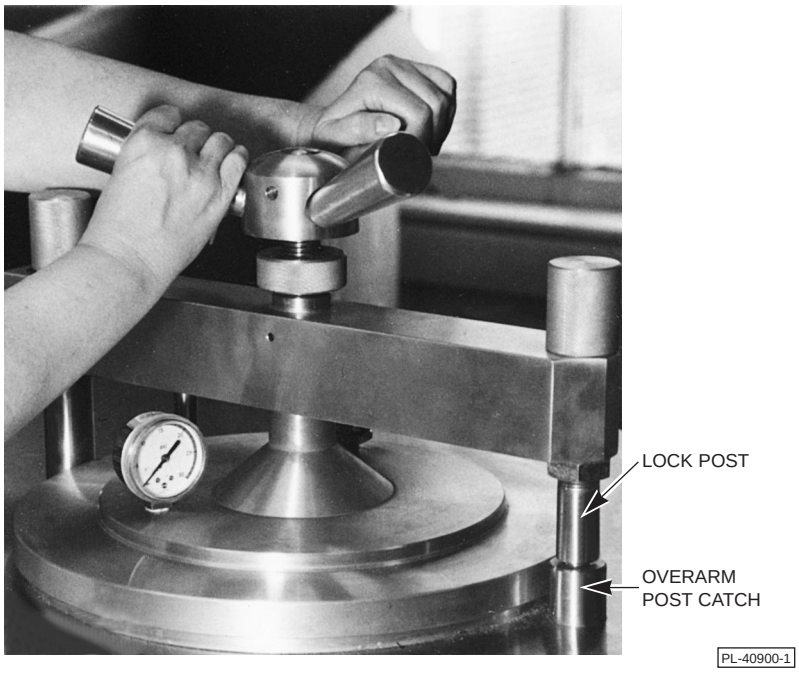

Fig. 10

6. After tightening the lid, set the timer to the desired cooking time for item being fried.

7. The rest is automatic. Forty-five seconds prior to the end of the cooking cycle, the pressure will automatically be released. The buzzer will sound at the end of the cooking cycle. Rotate the timer to the OFF position to silence the buzzer.

8. A lid-locking device will permit opening the lid **only** after all pressure has been released. At this time, the pressure gauge will read "0."

9. When pressure gauge reads "0", turn the handle counterclockwise **UNTIL IT STOPS** before opening the lid. **CAUTION: Seal damage can occur if handle is not completely unscrewed. Do not force the lid to open.**

10. Using insulated mitts or tongs, raise the frying basket out of the oil and hang the basket on the lip of the kettle. Allow product to drain approximately 20 to 25 seconds. Remove the product and return the basket to the oil.

    It is not necessary to turn the fryer OFF for this procedure. The cooking cycle is controlled by the setting of the timer, and the oil temperature is regulated by the thermostat.

TURNING THE FRYER OFF

1. Turn thermostat to OFF.

2. Turn power switch to the OFF position.

Extended Shutdown

1. Turn manual gas shutoff valve OFF.

2. Turn thermostat to OFF.

3. Turn power switch to the OFF position.

4. Turn gas valve and gas combination control knob to OFF.

5. Clean fryer following instructions shown in the CLEANING section of this manual. It is especially important that the solenoid assembly be cleaned.

AUTOMATIC SHUTOFF

If the burner flame goes out, gas flow to the main burner will automatically be shut off. The gas combination control valve will remain in the ON position—it does not simultaneously return to OFF.

To relight burner, repeat Steps 1 through 6 under LIGHTING INSTRUCTIONS.

HIGH LIMIT SWITCH

Your pressure fryer is equipped with a high temperature limit switch. If an over temperature situation occurs, the yellow high limit light will flash, the pressure will be exhausted, and the gas burner will be turned off. Once the oil temperature cools to below the high limit temperature, the high limit thermostat will reset and operation will resume automatically. It is recommended that you turn the power off and open the kettle lid to allow the oil to cool. The high limit switch may activate during initial start-up until the kettle temperature stabilizes. If the high limit switch activates anytime after initial start-up, turn the fryer off and call your local Hobart Service Office.

POWER FAILURE

In the event of a general power failure, **turn the thermostat knob and power switch to their OFF positions.** After pressure gauge indicates "0," open the fryer lid and remove the basket from the kettle.

Upon resumption of electrical service, repeat all start-up procedures.

PRESSURE RELIEF VALVE

The pressure relief valve is located on the fryer lid. This relief valve is non-adjustable and preset at the factory to release the kettle pressure automatically if over 15 psi. This valve is also equipped with a ring (Fig. 11) which should be lifted if kettle pressure exceeds 15 psi and the valve hasn't released pressure automatically. **CAUTION: Do not allow kettle pressure to exceed 15 psi.** Keep the exhaust port of the pressure relief valve clear of obstructions.

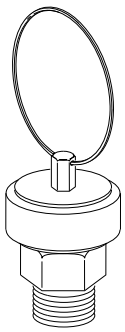

PL-52195

Fig. 11

SUGGESTED COOKING GUIDE

These **suggested** cooking times are based on average-sized portions. Heavier portions will require a longer frying time.

FOOD	TEMP. (°F)	TIME (Minutes) (Food at Room Temp.)	TIME (Minutes (Refrigerated Product)
*Chicken, 2 lb.	325	8	9
2 1/4 lb.	325	8 1/2	9
2 1/2 lb.	325	9	9 1/2
2 3/4 lb.	325	9 1/2	10
Pork Chops, 3-4 oz.	325	5	5 1/2
5-6 oz.	325	6 1/2	7
7 oz.	325	7	7 1/2
Frozen Breaded Shrimp, Regular Medium-sized	325	1 1/2 to 2	3 1/2 to 5
French Fried Potatoes, Raw	325	4	
Frozen (blanched)	325		3
Breaded Veal Cutlet, 3 oz.	325	5	5 1/2
4 oz.	325	6	6 1/2
Lamp Chops, 2-4 oz. (thin)	325	5	6
5-6 oz. (thick)	325	11	12

*Use 2 1/2 to 2 3/4 lb. whole chickens. If chickens are larger than this, increase cooking time by one minute for each additional 1/4 lb. of product. (Example: If chickens weigh 3 lb., add one more minute to the frying time suggested.) Cut chicken and bread or season as desired.

Other Items Which May Be Prepared In The Pressure Fryer

FOOD	TEMP. (°F)	TIME (Min.)
Chicken Fried Steak	325	8
Liver	325	4
Sweet Breads	325	4
Fish Fillets (Frozen & Pre-breaded)	325	5
Shrimp (Fresh)	325	4
Oysters	325	2
Lobster Tail	325	4
Scallops	325	2
Croquettes	325	3
Franks Wrapped in Bacon	325	4
Onion Rings	325	1
Asparagus	325	1
Brussel Sprouts	325	1
Corn-on-the-cob	325	3

DRAINING AND FILTERING OIL

WARNING: HOT OIL AND PARTS CAN CAUSE BURNS. USE CARE WHEN OPERATING, CLEANING OR SERVICING THE FRYER.

WARNING: SPILLING HOT FRYING COMPOUND CAN CAUSE SEVERE BURNS. DO NOT MOVE FRYER WITHOUT DRAINING ALL FRYING COMPOUND FROM THE TANK.

WARNING: DO NOT DRAIN OR FILTER OIL WHILE KETTLE IS UNDER PRESSURE.

To prolong oil life, it is recommended that you filter the oil after 85 to 90 pounds of product have been cooked. Filter the cooking oil using the Hobart HOF40 Portable Filter, the integral filter included with Model HP15GF, or with a vacuum or gravity style filter by others. Draining through cheesecloth will not clean the oil sufficiently for pressure frying.

USING THE HOF40 PORTABLE FILTER

Follow the instructions shipped with the filter.

USING A POWER FILTER DEVICE FROM ANOTHER MANUFACTURER

If you use a power filter supplied by another manufacturer, follow the instructions included with the device.

MODEL HP15G PRESSURE FRYER (Without Built-In Oil Filter)

Filtering Oil During the Production Period.

1. Turn thermostat, power switch and gas valve off before draining or filling. Open lid.

2. Attach drain elbow (supplied) to drain pipe.

3. Position filtering system under the drain, open drain valve and drain oil into the filter machine.

4. Using a long-handled brush, wash sides and bottom of kettle with some remaining warm oil. Rinse with warm oil.

5. When clean, close the drain valve and return oil to kettle.

6. Remove drain elbow.

7. Check oil level and turn fryer ON. Cooking can resume when the white cooking light goes out.

Filtering Oil at the End of the Production Day

This procedure must be done while the kettle is still warm. Filtering time increases as the oil cools.

1. Turn thermostat, power switch and gas valve off before draining or filling. Open lid.

2. Attach drain elbow (supplied) to drain pipe.

3. If you use filter powder (diatomaceous earth), follow the manufacturer's instructions and add filter powder to oil in kettle. Stir with the wooden stick provided.

4. Position filtering system under the drain elbow, open drain valve and drain oil into the filter machine. Drain until approximately 2" of oil remains in the kettle.

5. Using a long-handled brush, wash sides and bottom of kettle with the remaining warm oil, then finish draining tank.

6. While oil is out of the kettle, remove any excess breading from the bottom of the kettle. Use the wooden stick provided to dislodge any material that may have collected in the kettle drain (Fig. 12).



Fig. 12

7. Place a suitable pot or vessel under the drain valve outlet to receive cleaning water from the kettle.

8. Close drain valve and **CAREFULLY** pour 2-3 gallons of COLD water into the kettle. Use a non-abrasive, plastic web-type, non-rusting, non-shredding pad to wash the kettle completely. Drain the water. Rinse kettle well with clear water. Drain again. Wipe kettle dry with a soft, clean, lint-free cloth. Close drain valve.

9. Wash the fry basket and drop-off screen (Fig. 13) in hot soapy water. Rinse thoroughly and wipe dry with a soft clean cloth.

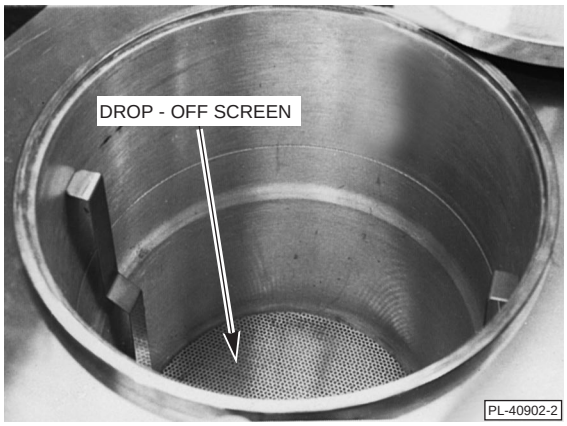

Fig. 13

10. Wipe the under part of the lid clean, including the diaphragm (Fig. 14).



Fig. 14

11. Continue with the cleaning instructions described in the CLEANING section of this manual.

12. Close drain valve and return oil to kettle.

13. Remove drain elbow.

14. Check the oil level, and the fryer is ready for the next production period.

MODEL HP15GF PRESSURE FRYER (With Built-In Oil Filter)

Filtering Oil during the Production Period

1. Turn power switch to FILTER. Open kettle lid if necessary. Make certain filter paper and screen are in place on bottom of filter tank. (Optional: Add diatomaceous earth to oil.) Carefully open drain valve (Fig. 15). Allow kettle to drain completely.

2. Close drain valve. Turn filter ON by turning filter valve (Fig. 15) to ON position. Allow approximately 2" of oil to fill kettle. Then turn filter OFF by turning the filter valve to OFF. Doing so while the drain valve is closed returns oil to the kettle in order to wash down the kettle wall. Use a brush to clean wall and bottom of kettle. After cleaning, open drain valve to return oil to filter tank.



Fig. 15

3. With drain valve open, turn the filter valve to ON to filter the oil. Allow to run approximately 5 minutes to filter oil completely. Close drain valve. Allow oil to return to kettle. Turn filter valve OFF. Turn power switch to ON to continue cooking, or OFF for nightly shutdown.

4. Maintain oil level at the line in the kettle, making up any loss as necessary. Cooking may resume after fryer reaches the correct temperature.

Filtering Oil at the End of the Production Day

This procedure must be done while the kettle is still warm. Filtering time increases as the oil cools.

1. Turn thermostat, power switch, and gas valve OFF before draining or filling. Open lid.

2. If you use filter powder (diatomaceous earth), follow the manufacturer's instructions and add filter powder to oil in kettle. Stir with the wooden stick provided.

3. Position filter tank under the drain, open drain valve and drain oil into the filter tank. Drain until approximately 2" of oil remains in the kettle.

4. Using a long-handled brush, wash sides and bottom of kettle with the remaining warm oil, then finish draining tank.

5. While oil is out of the kettle, remove any excess breading from the bottom of the kettle. Use the wooden stick provided to dislodge any material that may have collected in the kettle drain (see Fig. 12).

6. Open drain valve to drain remaining 2" of oil into the filter tank, then close drain valve. Disconnect wand from hose at coupling. Push filter tank to extreme rear of fryer to allow a suitable pot or vessel to be placed under drain valve outlet to receive cleaning water from kettle.

7. Close drain valve and **CAREFULLY** pour 2-3 gallons of COLD water into the kettle. Use a non-abrasive, plastic web-type, non-rusting, non-shredding pad to wash the kettle completely. Drain the water. Rinse kettle well with clear water. Drain again. Wipe kettle dry with a soft, clean, lint-free cloth. Close drain valve.

   Reposition and reconnect filter tank. Return oil to kettle, filtering until clean. When returning oil to kettle, follow the instructions under FILTERING OIL DURING THE PRODUCTION PERIOD on page 18.

8. Wash the fry basket and drop-off screen (see Fig. 13) in hot soapy water. Rinse thoroughly and wipe dry with a soft clean cloth.

9. Wipe the under part of the lid clean, including the diaphragm (see Fig. 14).

10. Check the oil level, and the fryer is ready for the next production period.

11. Continue with the cleaning instructions described in the CLEANING section of this manual.

Cleaning the Filter

Change filter paper approximately once per week.

1. Pull filter tank forward and disconnect wand from hose, then pull forward.

2. Remove lid.

3. Remove crumbs and residue with plastic scraper or spatula.

4. Remove wand/hold down plug assembly, 2 silicone washers and filter screen (Fig. 16).

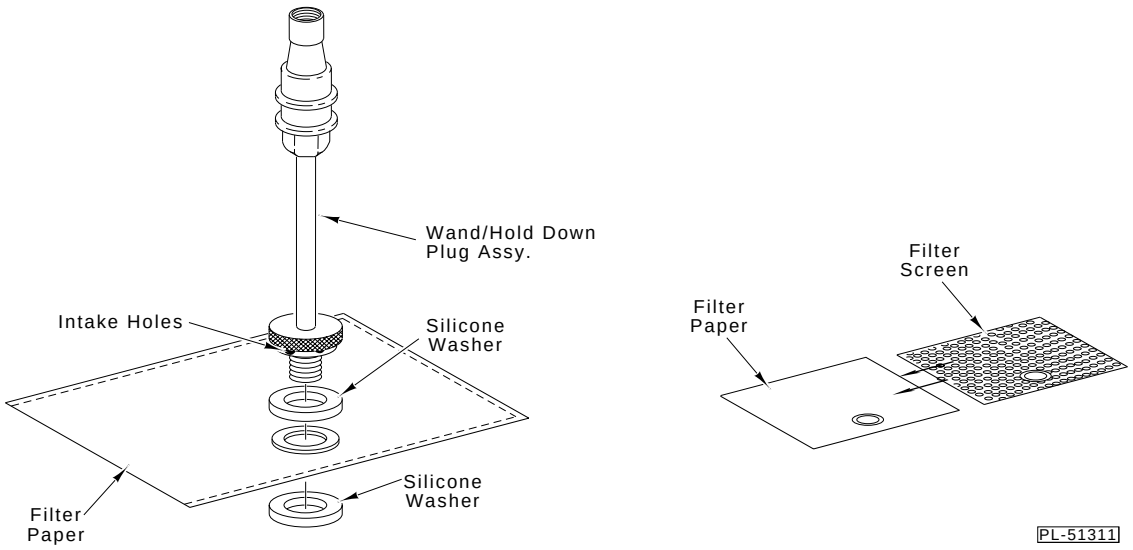

Fig. 16

5. Replace filter paper (available from Hobart) (see Fig. 16) and staple onto screen.

6. Replace 1 silicone washer, then screen, 1 silicone washer, then wand/hold down plug assembly in order given (see Fig. 16). Tighten finger tight only.

7. Replace cover and slide tank into cabinet and over locking pin. Pull tank forward until it rests against locking pin. Connect quick-connect from hose to wand assembly.

CLEANING

WARNING: UNPLUG ELECTRICAL POWER SUPPLY BEFORE CLEANING.

Daily Cleaning

— **Stainless Steel**

Clean stainless steel regularly with a damp cloth and polish with a soft dry cloth. If regular cleaning is neglected, grease will be burned on and discolorations may form. These may be removed by washing with any detergent or soap and water. Particularly stubborn discolorations may be removed with a self-soaping scouring pad or a paste made of water and a mild scouring powder applied with a plastic open pad or sponge. **CAUTION: Always rub with the "GRAIN" in a horizontal direction.**

It is important to keep the fryer exterior clean and free of accumulated grease. Wash all exterior surfaces at least once daily. Use a cloth with warm water and a mild soap or detergent. Follow with a clear rinse, then dry.

— **Aluminum Kettle**

See cleaning procedure for Model HP15G on page 16 and for Model HP15GF on page 18 under FILTERING OIL AT THE END OF THE PRODUCTION DAY.

Cleaning After Every Production Period

— **Exhaust Tank**

Drain the exhaust tank at the end of every production period while the liquid is hot. The exhaust tank drain valve is located behind the front access door at the lower right.

1. Attach the drain pipe extension (supplied) and drain the exhaust tank by turning the drain valve handle up (Fig. 17).

2. After draining the exhaust tank, turn the handle down to close the drain valve, then remove the drain pipe extension before closing the door.

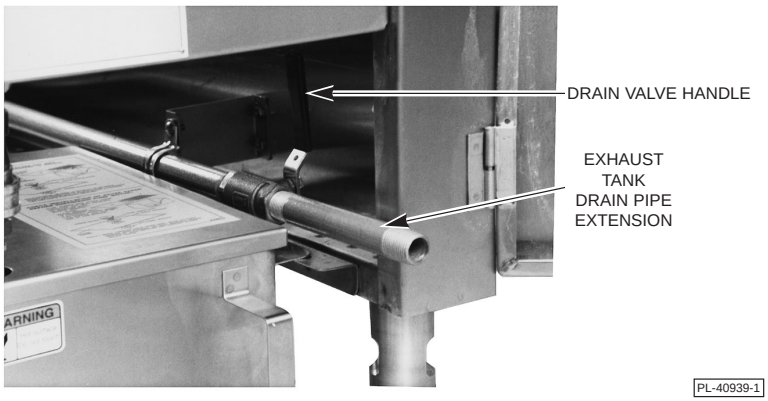

Fig. 17

Weekly Cleaning (More often if required)

— Solenoid Assembly

CAUTION: The kettle pressure regulator in the solenoid assembly must be cleaned at least once a week during normal usage or the fryer may malfunction.

Dismantle and clean the solenoid assembly. The solenoid assembly (Fig. 18) is located behind the front access door above the drain valve for the exhaust tank. An open wrench is supplied with each machine for this purpose.

1. Unplug the electrical cord attached to the upper portion of the solenoid assembly (Fig. 18). To unplug, twist the plug counterclockwise and pull out.

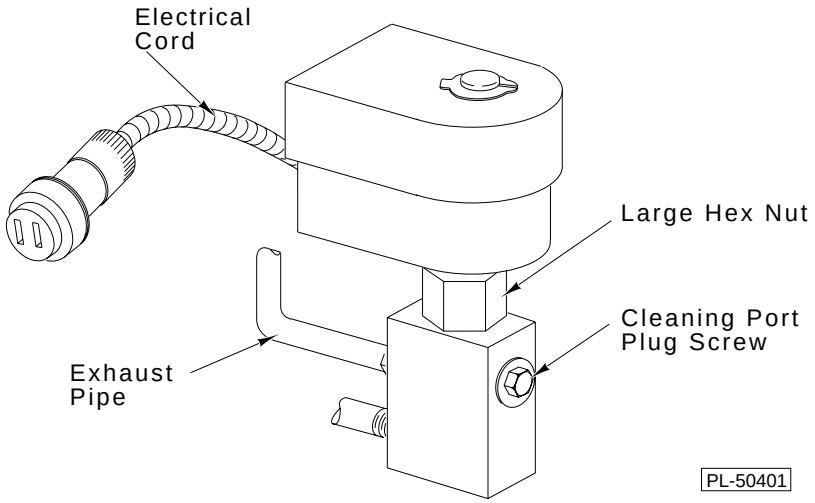

Fig. 18

2. Using the wrench supplied, loosen large hex nut on solenoid (Fig. 19) and remove top portion of solenoid assembly.

3. Remove the kettle pressure regulator assembly (Fig. 20). Wash complete assembly with a Scotchbrite pad and warm soapy water. Rinse thoroughly and wipe dry.



Fig. 19

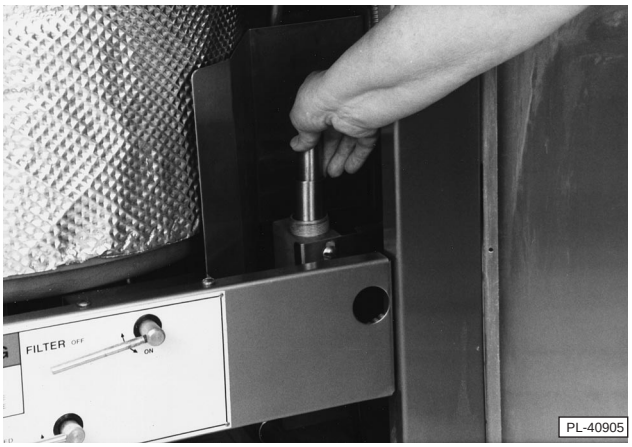

Fig. 20

4. With the kettle pressure regulator assembly out, use small end of open wrench to remove the plug screw from the cleaning port on the solenoid block (Fig. 21).

5. Remove the elbow joint from inside the kettle (Fig. 22)

5. Using the flexible cleaning rod supplied, clear any obstructions from the exhaust pipe (Fig. 23).

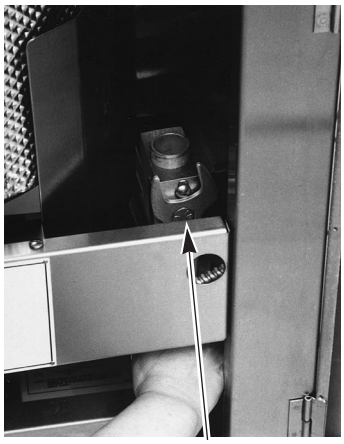

Fig. 21



Fig. 22

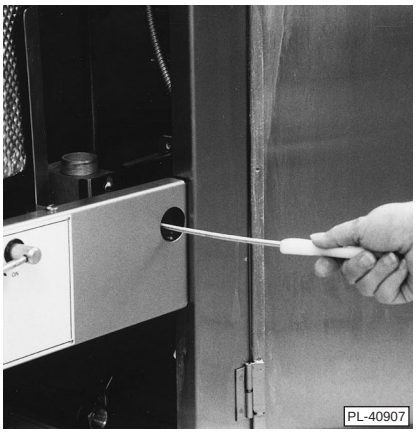

Fig. 23

6. Replace the plug screw and the kettle pressure regulator assembly.

   A. Before reinserting kettle pressure regulator assembly, dip O-ring end of assembly in cooking oil to protect O-ring.

   B. Ensure that the spool of the kettle pressure regulator assembly is positioned CORRECTLY (Fig. 24). Window of spool must face cleaning port. If spool is positioned INCORRECTLY, the pressure discharge port will be partially blocked causing excessive pressure discharge time.

   C. Make certain that O-ring of kettle pressure regulator assembly is well seated in solenoid block (Fig. 25).

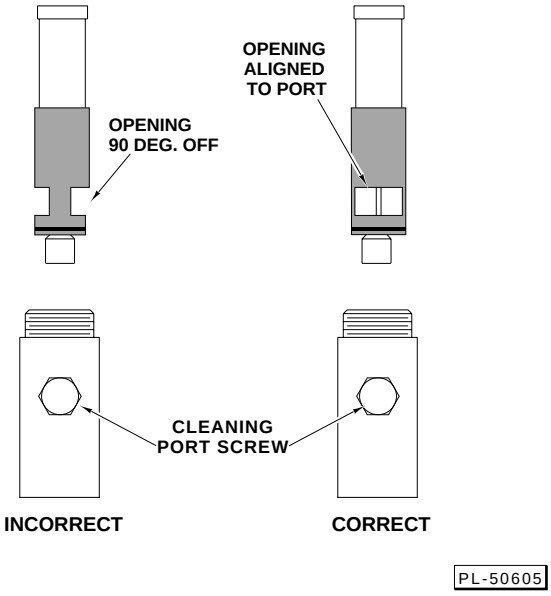

Fig. 24

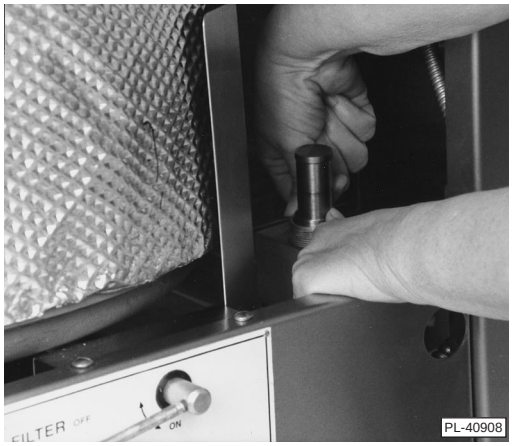

Fig. 25

7. Replace the upper portion of the solenoid assembly and tighten well.

8. Plug the cord back into the upper portion of the solenoid, and twist clockwise to ensure a good connection.

— Kettle Lid

Clean the kettle lid weekly.

1. Remove lid assembly. To remove, open lid clear of overarm post catch, remove pivot post knurled cap, and lift up on lid until the overarm bar clears the pivot post.

2. Remove the O-ring from the underside of the kettle lid by prying it loose at one point with a plastic knife (Fig. 26) or other blunt thin tool. Avoid slicing or gouging the O-ring. Wash the O-ring separately in warm soapy water, then rinse thoroughly and dry with a soft clean cloth. **CAUTION: Never use a metallic or sharp instrument to remove or insert the O-ring.**

3. Wash the lid assembly in warm soapy water. Rinse thoroughly and dry with a soft clean cloth.

4. Before replacing the O-ring, make certain that the groove (Fig. 27) is free of particles and the edges of the groove are not sharp or burred.

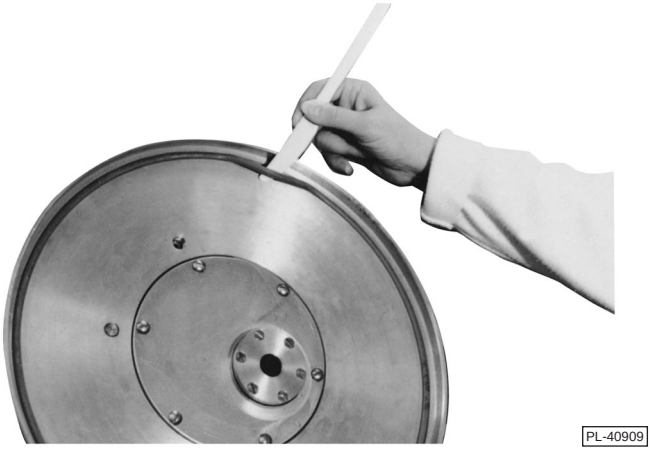

Fig. 26

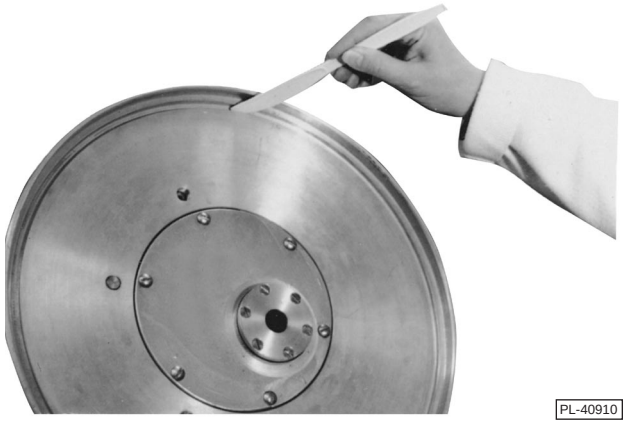

Fig. 27

5. Dip the O-ring in cooking oil for lubrication, and insert it into the groove. **IMPORTANT:** First press O-ring into place at the 12, 6, 3 and 9 o'clock positions (Fig. 28). Using finger pressure only, stretch and work the O-ring into the groove until it is seated all the way around. Apply pressure straight down. Do not twist or roll the ring into the groove; this may fracture the skin of the ring.

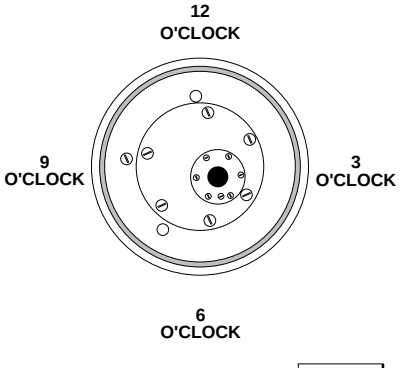

Fig. 28

6. To reinstall kettle lid, reverse the procedure described in Step 1.

— Pressure Relief Valve

Once a week, operate the pressure relief valve release ring (see Fig. 11) by lifting it up and then back down.

Monthly Cleaning

— Exhaust Tank

Remove the exhaust tank at the rear of the fryer and flush it out with hot water. To remove the exhaust tank:

1. Remove 4 screws holding exhaust vent in place (Fig. 29) and lift exhaust vent up.
2. If exhaust pipe (Fig. 29) hinders removal of the exhaust tank, unscrew pipe and remove it.
3. Disconnect the drain pipe (Fig. 29) that runs from the pressure regulator housing to the exhaust tank at the union.

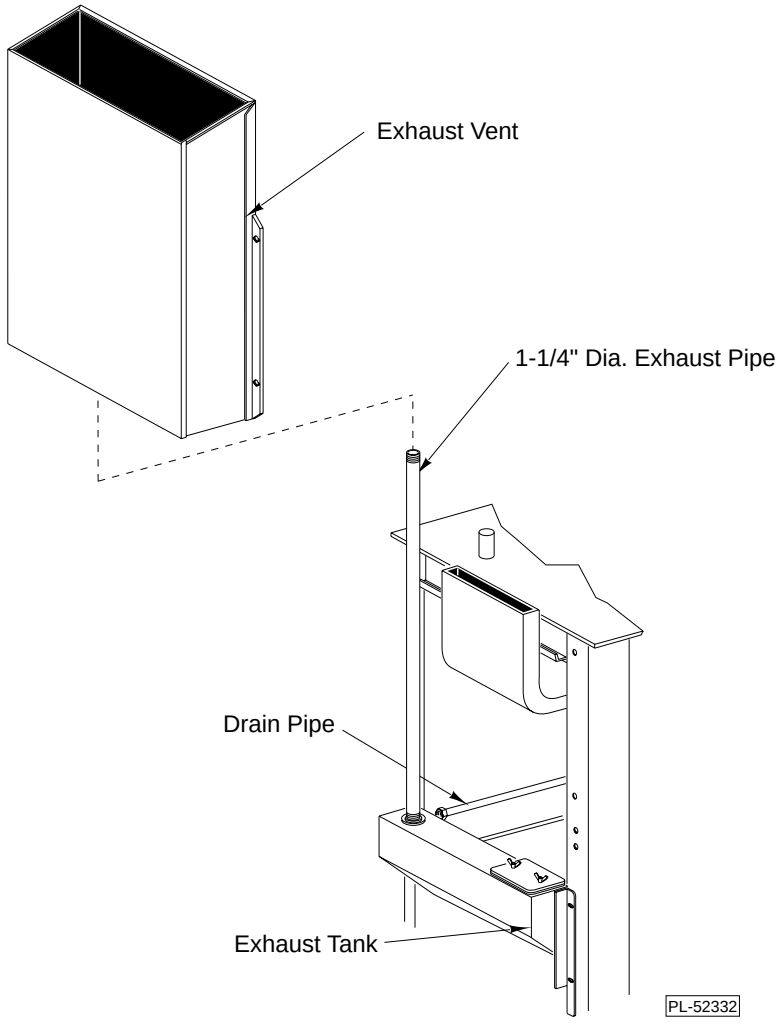

Fig. 29

4. Remove bolt from exhaust tank drain line clamp (Fig. 30).



Fig. 30

5. Remove 4 screws holding exhaust tank in place (see Fig. 29) and remove exhaust tank.
6. Flush exhaust tank with hot water.
7. Reverse procedure to reinstall exhaust tank.

MAINTENANCE

WARNING: HOT OIL AND PARTS CAN CAUSE BURNS. USE CARE WHEN OPERATING, CLEANING AND SERVICING THE FRYER.

WARNING: SPILLING HOT FRYING COMPOUND CAN CAUSE SEVERE BURNS. DO NOT MOVE FRYER WITHOUT DRAINING ALL FRYING COMPOUND FROM THE TANK.

WARNING: UNPLUG ELECTRICAL POWER SUPPLY BEFORE PERFORMING ANY MAINTENANCE.

LID O-RING SEAL REPLACEMENT

Removal and replacement instructions for the lid O-ring are described in the CLEANING section of this manual under KETTLE LID, page 23.

OTHER O-RING SEAL REPLACEMENTS

Kettle Pressure Regulator Assembly

The O-ring seal on the kettle pressure regulator assembly (Fig. 31) needs to be replaced if oil is leaking from the kettle lid. If steam leaks around the kettle pressure regulator O-ring and goes into the exhaust tank, pressure will not build in the kettle. Dip the new O-ring in oil for lubrication and insert it into the groove.

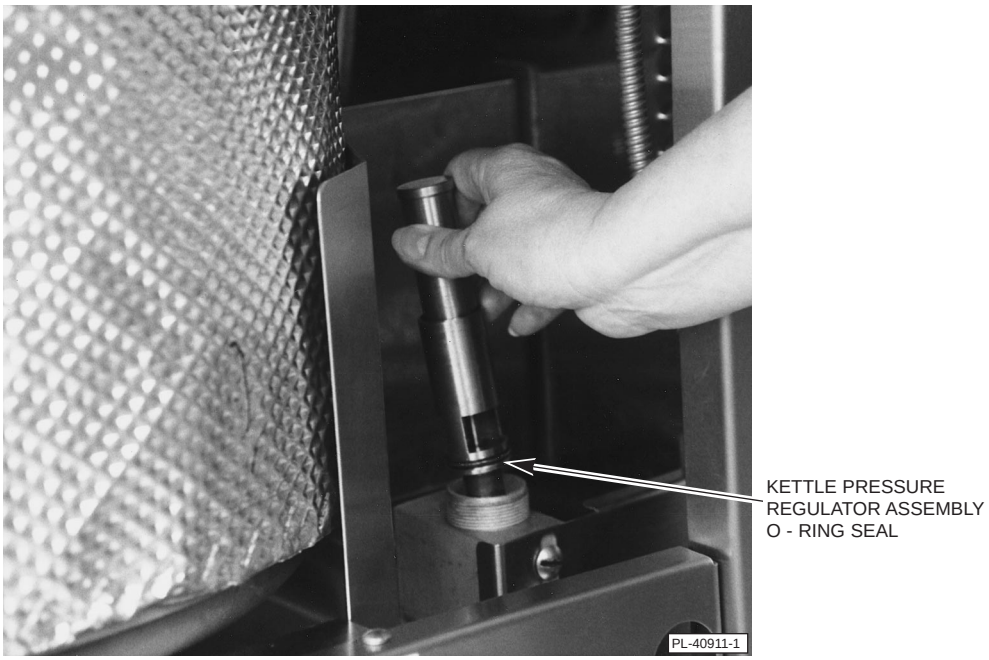

Fig. 31

Cleaning Port Plug Screw

The O-ring seal on the cleaning port plug screw (Fig. 32) needs to be replaced if liquid is leaking around the screw.



Fig. 32

VENT

When fryer is off and cool, annually examine the flue and clear any obstructions.

Contact personnel qualified to install and repair gas equipment for all other maintenance problems.

TROUBLESHOOTING

SYMPTOM	POSSIBLE CAUSES
Pressure will not build.	1. No product or very dry product loaded. 2. Power switch is in the OFF or FILTER position. 3. Lid not tightened. 4. Lid O-ring not sealing. Replace O-ring.
High pressure in kettle.	1. Dirty exhaust line to solenoid. 2. Dirty line from kettle pressure regulator to exhaust tank. 3. Exhaust tank vent plugged.
Loss of pressure during cooking cycle.	1. Kettle pressure regulator leaks. Make sure the solenoid plug is locked in place. 2. Kettle pressure regulator O-ring needs to be replaced.
No heat.	1. Thermostat not turned on. 2. Blown fuse in main electrical panel or in fryer. Fryer fuse is located inside door in a box on left side panel. Flip up lid on box and replace fuse (on bottom left side) with 15 amp rated fuse. 3. Power cord not plugged in. 4. Burner flame out.
Oil smokes, bubbles vigorously and breaks down after a few cookings.	1. Oil has not been properly filtered. 2. Suet may have been added. Never add suet. 3. Breading is accumulating in the bottom of the kettle.
Oil leaking from kettle lid.	Low pressure in kettle. The kettle lid O-ring needs to be replaced.
Pressure doesn't exhaust properly.	1. Exhaust pipe between solenoid and kettle needs to be cleaned. Follow procedures described in this manual under CLEANING - WEEKLY OR MORE OFTEN IF REQUIRED - SOLENOID ASSEMBLY. (If the exhaust pipe is restricted or plugged, the pressure relief valve on the lid will open.) 2. The kettle pressure regulator is dirty. 3. The timer is not opening the solenoid. Contact your local Hobart Service Office.
Pressure releases too slowly at the end of a cooking cycle.	Spool in kettle pressure regulator assembly may have been incorrectly positioned after cleaning. See Fig. 24 for proper position.
Lid will not lock — **DO NOT OPERATE FRYER.**	Lid diaphragm or locking mechanism needs to be replaced. Contact your local Hobart Service Office.