HOBART

CATALOG OF REPLACEMENT PARTS

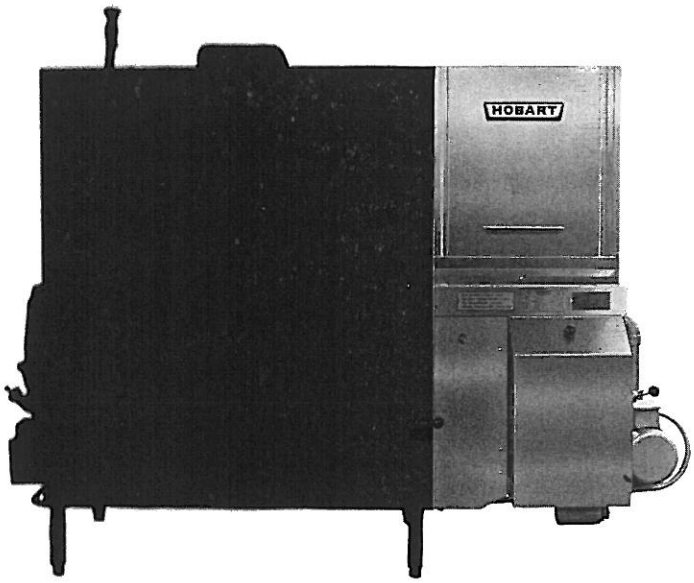

MODEL RS22 PREWASH UNIT

FOR CRS66, 76, 86 or 103 DISHWASHERS

(INCLUDES MOTOR PARTS)

ML-33299	CRS66	R. to L.
ML-33300	CRS66	L. to R.
ML-31852	CRS76	R. to L.
ML-31853	CRS76	L. to R.
ML-33324	CRS86	R. to L.
ML-33325	CRS86	L. to R.
ML-31856	CRS103	R. to L.
ML-31857	CRS103	L. to R.

A product of HOBART CORPORATION TROY, OHIO 45374

FORM 16205 (8-86)

Table of Contents

Page	Description
3	Motor and Pump (½ H.P. Motor)
5	Motor and Pump (1 H.P. Motor)
7	½ H.P. Motor
9	1 H.P. Motor
10	Motor Relay (3 Ph.) (CRS86 & CRS103)
11	Jumper Panel
13	Door
15	Wash Chamber and Tank
17	Wash Piping (½ H.P. Motor)
19	Wash Piping (1 H.P. Motor)
21	Cradle and Tracks
23	Drain and Overflow
25	Temperature Control (Piping)
26	Temperature Control (Electrical)
27	Auto Fill (Pressure Switch)
28	Auto Fill (Switch Arm)
29	Auto Fill (Rotary Switch)
30	Flow Back Piping (CRS66 & CRS76)
31	Flow Back Piping (CRS86 & CRS103)
32	Common Drain

This Catalog now contains parts for Standard Height as well as 3″ and 6″ higher than Standard Height. For proper identification of some parts it is necessary to measure the Door Height. These parts are so noted.

DOOR HEIGHT

$22\frac{5}{16}$″ = Standard
$25\frac{5}{16}$″ = 3″ Higher than Standard
$28\frac{5}{16}$″ = 6″ Higher than Standard

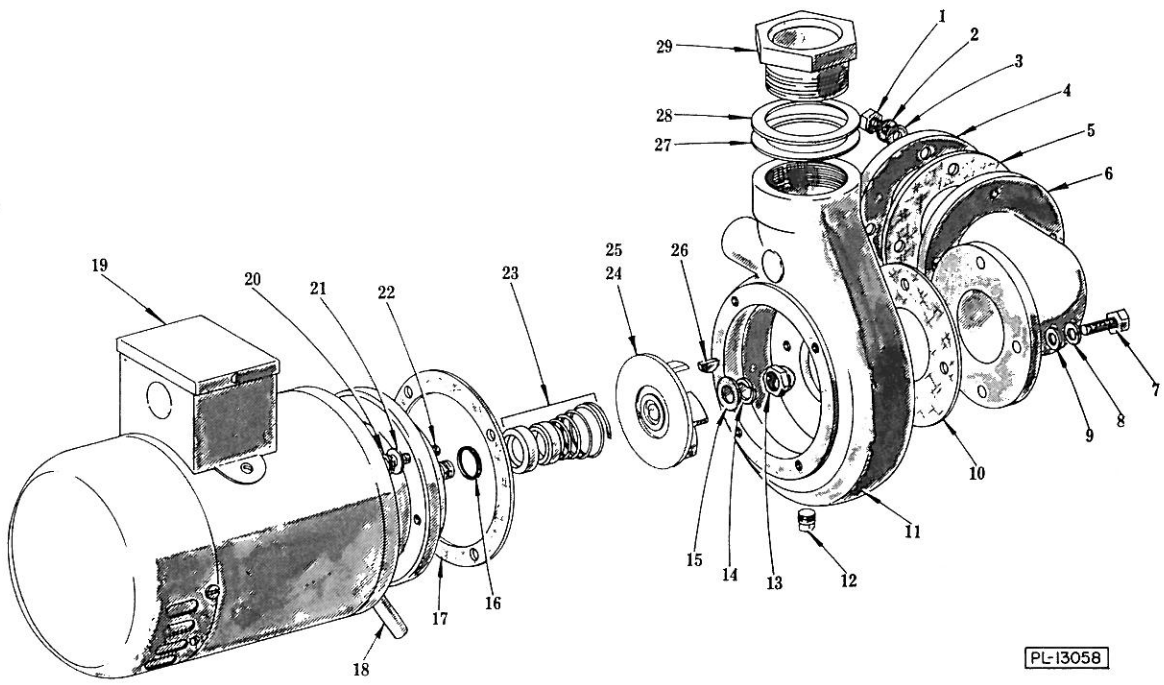

MOTOR AND PUMP
(½ H.P. MOTOR)

ILLUS. PL-13058	PART NO.	NAME OF PART[17]	AMT.
1	SC-41-13	Cap Screw 5/16-18 x 1 Hex Hd	4
2	WL-6-22	Lock Washer 5/16 Light	4
3	WS-17-8	Washer	4
4	82642	Retainer - Intake Ell	1
5	82643	Gasket - Intake Ell	2
6	82660	Ell - Pump Intake	1
7	SC-41-13	Cap Screw 5/16-18 x 1 Hex Hd	4
8	WL-6-22	Lock Washer 5/16 Light	4
9	WS-17-8	Washer	4
10	10563	Gasket - Pump	1
11	68877	Pump Shell	1
12	FP-52-20	Plug 1/8 Sq. Hd. Pipe	1
13	NS-24-6	Acorn Nut 7/16-20	1
14	WL-6-32	Lock Washer 7/16 Light	1
15	WS-21-1	Washer	1
16	67500-7	"O" Ring	1
17	104063	Gasket - Face Plate	1
18	FP-64-15	Nipple 3/8 x 2¼ (S.T.O.E.) (Drain for Motor)	1
19	ML-18897	Motor (Give Elec. Spec.)	1
20	WL-6-22	Lock Washer 5/16 Light	4
21	WS-17-8	Washer	4
22	SC-41-13	Cap Screw 5/16-18 x 1 Hex Hd	4
23	104329	Shaft Seal Assy. (5/8)	1
24	103474	Impeller (3450 RPM) (60 Hz.)	1
25	106638	Impeller (2850 RPM) (50 Hz.)	1
26	KW-3-3	Key - #404 Woodruff	1
27	21105	Washer (Lead)	1
28	21104	Washer (SST)	1
29	82645	Discharge - Pump	1
	ML-39345	Motor & Impeller Assy. (Give Elec. Spec.)	1

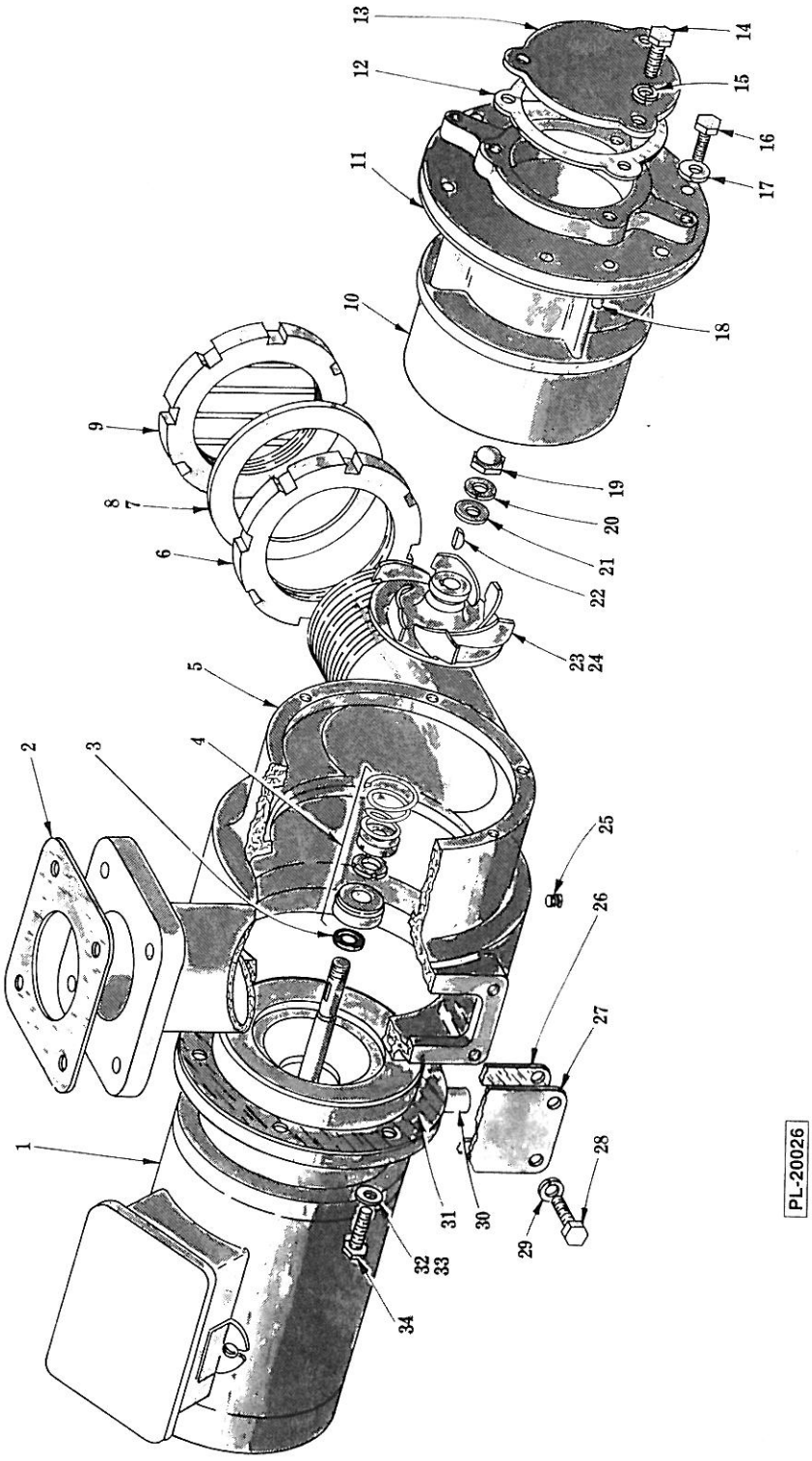

MOTOR AND PUMP (H-6-F)
(1 H.P. MOTOR)

MOTOR AND PUMP (H-6-F)
(1 H.P. MOTOR)

ILLUS. PL-20026	PART NO.	NAME OF PART17	AMT.
1	ML-18491	Motor Unit (Give Elec. Spec.)	1
2	9934-1	Gasket - Pump Outlet	1
3	67500-7	"O" Ring	1
4	104329	Shaft Seal Assy	1
5	77726	Shell - Pump	1
6	9925	Lock Nut - Inlet	AR
7	WS-16-18	Washer	2
8	508458	Sealer (¼" Rd.)	AR
9	87954	Pump Intake Screen Assy	1
10	77727	Plate - Face	1
*11	80432	Face Plate Gasket Kit (1 Set Consists of: 1 Blue (.055" Thk.); 1 Brown (.010" Thk.); & 1 Yellow (.020" Thk.))	1Set
12	22465	Gasket - Face Plate Cover	1
13	112558	Face Plate Cover & Label Assy	1
14	SC-41-10	Cap Screw 5/16-18 × 5/8 Hex Hd	3
15	WL-3-43	Lock Washer 5/16 Light	3
16	SC-41-12	Cap Screw 5/16-18 × 7/8 Hex Hd	6
17	WL-3-43	Lock Washer 5/16 Light	6
18	11800-37	Dowel	1
19	NS-24-6	Acorn Nut 7/16-20	1
20	WL-6-32	Lock Washer 7/16 Light	1
21	WS-21-1	Washer	1
22	KW-3-3	Key - #404 Woodruff	1
23	74299	Impeller (3450 RPM) (60 Hz.)	1
24	74542	Impeller (2850 RPM) (50 Hz.)	1
25	FP-52-20	Plug 1/8 Sq. Hd. Pipe	1
26	12137	Gasket	1
27	112478	Cover - Hand Hole	1
28	SC-41-10	Cap Screw 5/16-18 × 5/8 Hex Hd	4
29	WL-3-43	Lock Washer 5/16 Light	4
30	FP-64-15	Nipple 3/8 × 2¼ Lg. (S.T.O.E.)	1
31	104032	Gasket	1
32	WS-17-8	Washer	6
33	508454	Sealer (1/8" Rd.)	AR
34	SC-41-12	Cap Screw 5/16-18 × 7/8 Hex Hd	6
	80431-1	H-6-F Pump Assy. (60 Hz.) (Incls. items 2 thru 7, 10 thru 23, 25, 26 thru 29, 31, 32 & 34)	1
	80431-5	H-6-F Pump Assy. (50 Hz.) (Incls. items 2 thru 7, 10 thru 22, 24 thru 29, 31, 32 & 34)	1
	112417-3	Motor & Impeller Assy. (60 Hz., 1 Ph.) (Incls. items 1, 3, 4, 19, 20, 21, 22, 23, 30 & 31)	1
	111070-29	Motor & Impeller Assy. (60 Hz., 3 Ph.) (Incls. items 1, 3, 4, 19, 20, 21, 22, 23, 30 & 31)	1
	112417-5	Motor & Impeller Assy. (50 Hz., 1 Ph.) (Incls. items 1, 3, 4, 19, 20, 21, 22 & 24)	1
	111070-30	Motor & Impeller Assy. (50 Hz., 3 Ph.) (Incls. items 1, 3, 4, 19, 20, 21, 22 & 24)	1

*Select gasket to obtain .008" to .010" clearance between face plate and impeller.

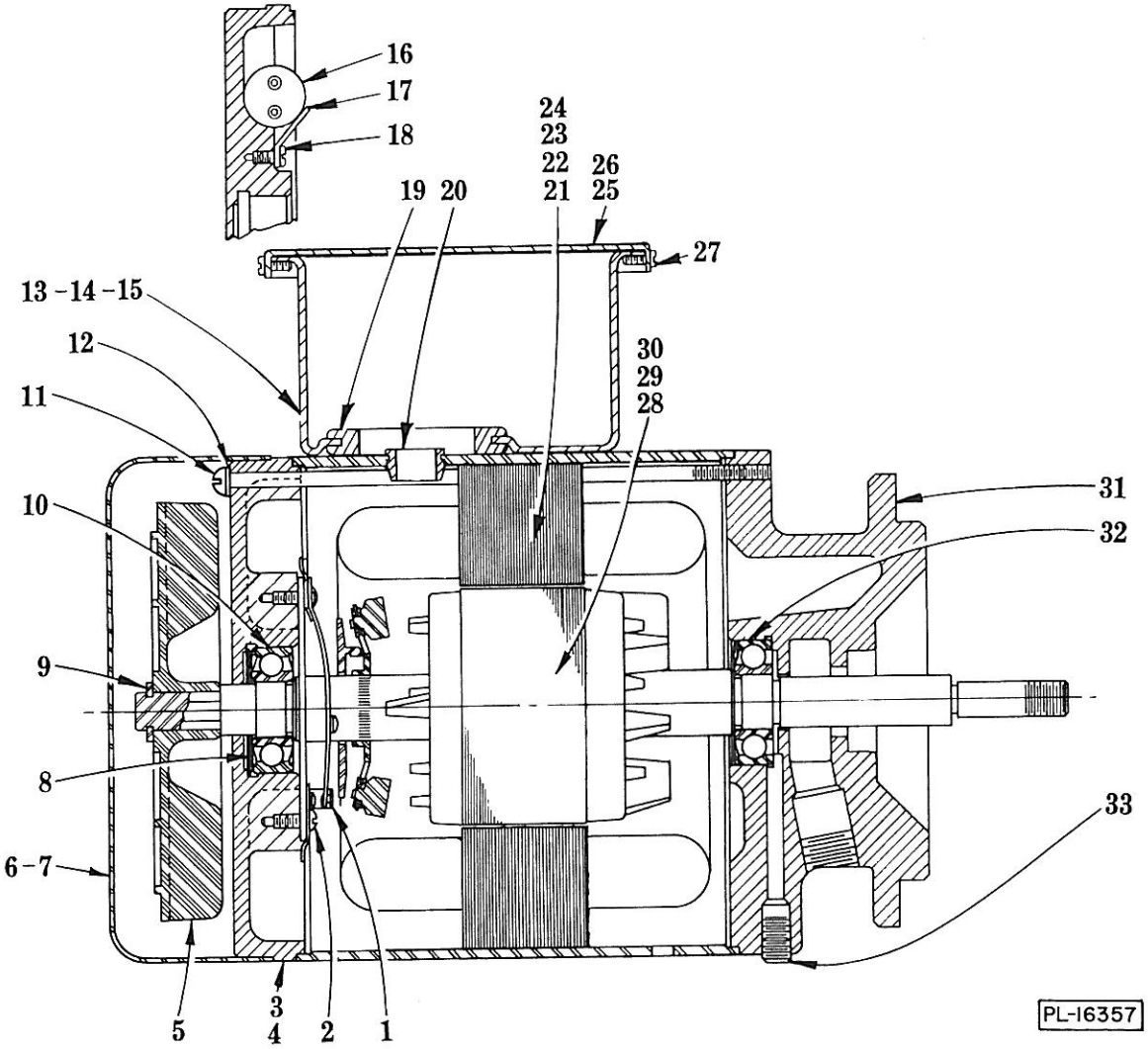

½ H.P. MOTOR UNIT

½ H.P. MOTOR UNIT

ILLUS. PL-16357	PART NO.	NAME OF PART17	AMT.
*1	106590	Switch - Starting (Stationary Part)	1
*2	SC-18-50	Mach. Screw 6-32 x ¼ Pan Hd	4
*3	114379-1	Bracket - Bearing (Fan End)	1
**4	114379-2	Bracket - Bearing (Fan End)	1
5	111493-1	Fan - Ventilating	1
6	77067	Cover - Motor End	1
7	SC-9-65	Mach. Screw 8-32 x ¼ Rd. Hd	2
8	SL-2-4	Loading Spring N.D. #S-17	1
9	RR-4-17	Retaining Ring	1
10	BB-20-18	Ball Bearing N.D. #77503	1
11	SC-60-75	Mach. Screw 10-24 x 6½ Rd. Hd	4
12	WL-8-13	Lock Washer 10 Int. Shakeproof	4
13	120986	Box - Terminal	1
14	SD-15-27	Self-Tapping Screw 10 x 5/16 Pan Hd. "Taptite"	2
15	WL-7-12	Lock Washer 10 Ext. Shakeproof	2
*16	106689	Capacitor Assy	1
*17	106572	Clamp - Capacitor	2
*18	SC-18-50	Mach. Screw 6-32 x ¼ Pan Hd	2
19	60395	Grommet	1
20	79118	Bushing - Snap (Field Ring)	1
*21	65477-85-2	Stator Assy. (200-240 V., 60 Hz.; 220 V., 50 Hz.)	1
**22	65478-68-1	Stator Assy. (200-240 V., 60 Hz.; 220 V., 50 Hz.)	1
**23	65478-68-2	Stator Assy. (400-480 V., 60 Hz.)	1
**24	65478-68-3	Stator Assy. (380 V., 50 Hz.)	1
25	113405	Cover - Terminal Box	1
26	114811	Gasket - Terminal Box Cover	1
27	SD-12-45	Self-Tapping Screw 8 x 5/16 Pan Hd., Type 23	2
*28	22275-180	Rotor Assy. (60 Hz.)	1
*29	22275-181	Rotor Assy. (50 Hz.)	1
**30	15747-278	Rotor Assy. (50/60 Hz.)	1
31	79206-1	Bracket - Bearing (Pump End)	1
32	BB-20-5	Ball Bearing - N.D. #7503	1
33	118070-1	Plug	1

*1 Phase.
**3 Phase.

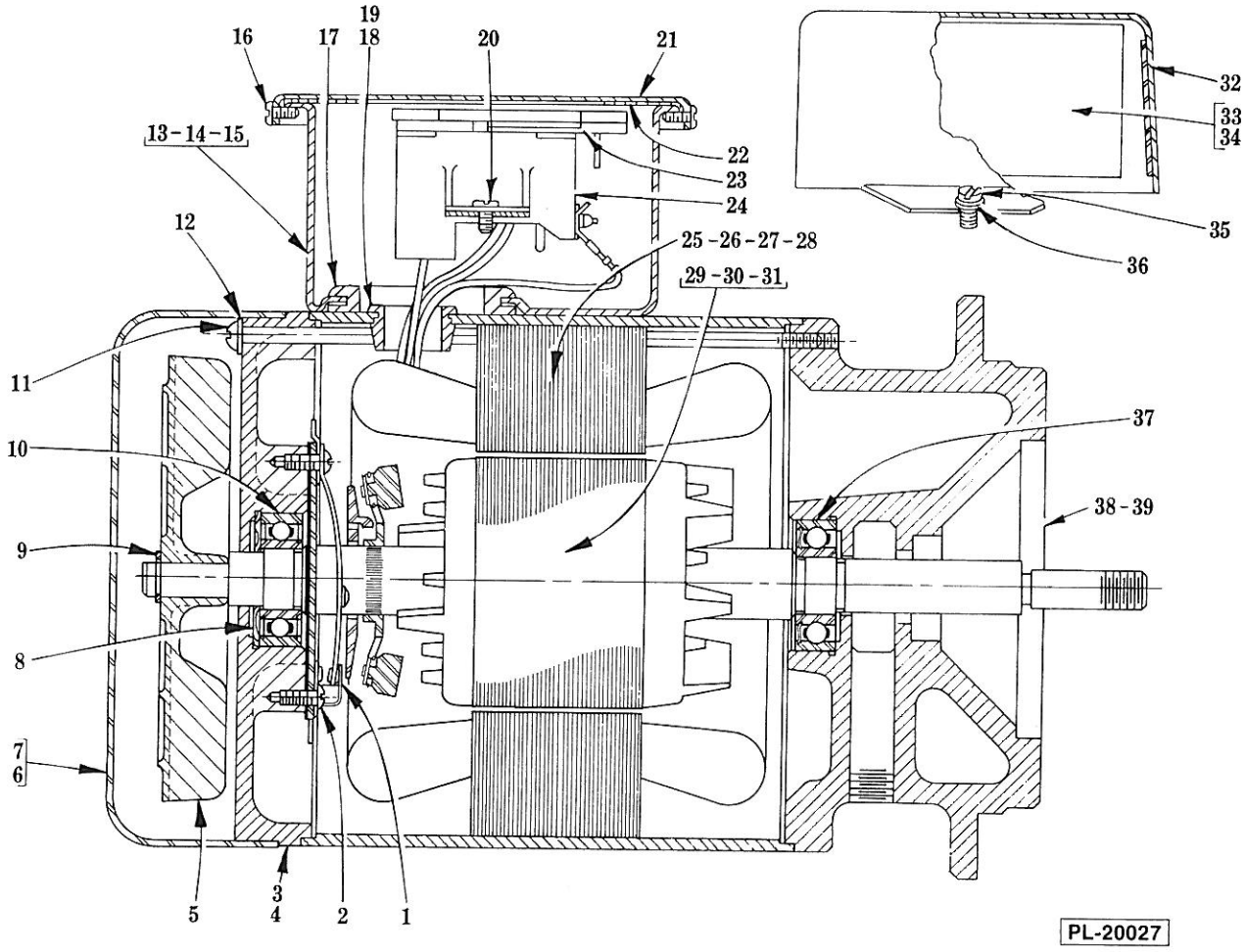

1 H.P. MOTOR UNIT

1 H.P. MOTOR UNIT

ILLUS. PL-20027	PART NO.	NAME OF PART[17]	AMT.
*1	119858-2	Switch Starting (Stationary Part)	1
*2	SC-9-49	Mach. Screw 6-32 × 3/8 Rd. Hd	2
*3	114379-3	Bracket - Bearing (Fan End)	1
**4	114379-2	Bracket - Bearing (Fan End)	1
5	292466-1	Fan - Ventilating	1
6	77067	Cover - Motor End	1
7	SC-9-65	Mach. Screw 8-32 × 1/4 Rd. Hd	2
8	SL-2-4	Loading Spring - N.D. #S-17	1
9	RR-4-17	Retaining Ring	1
10	BB-20-18	Ball Bearing - N.D. #77503	1
11	SC-81-76	Mach. Screw 10-24 × 7 Rd. Hd	4
12	WL-8-13	Lock Washer 10 Int. Shakeproof	4
13	113403	Box - Terminal	1
14	SD-15-27	Self-Tapping Screw 10 × 5/16 Pan Hd. "Taptite"	2
15	WL-7-12	Lock Washer 10 Ext. Shakeproof	2
16	SD-12-45	Self-Tapping Screw 8 × 5/16 Pan Hd., Type 23	2
17	60395	Grommet	1
18	79118	Bushing - Snap (Field Ring)	1
*19	80369	Bushing - Snap (Field Ring)	1
20	SD-12-45	Self-Tapping Screw 8 × 5/16 Pan Hd., Type 23	2
21	113405	Cover - Terminal Box	1
22	114811	Gasket - Terminal Box Cover	1
23	113417	Connector Block Assy	1
24	113552	Terminal Block Base Assy	1
*25	65477-147-1	Stator Assy. (200-230 V., 60 Hz.)	1
*26	65477-147-2	Stator Assy. (220 V., 50 Hz.)	1
**27	65478-110-1	Stator Assy. (200-230 V., 400-460 V., 60 Hz.)	1
**28	65478-112-1	Stator Assy. (220/380 V., 50 Hz.)	1
*29	22275-208	Rotor Assy. (200-230 V., 60 Hz.)	1
*30	22275-207	Rotor Assy. (220 V., 50 Hz.)	1
**31	15747-288	Rotor Assy. (200-230 V., 400-480 V., 60 Hz.) (220/380 V., 50 Hz.)	1
*32	104725	Capacitor Cover & Insulator Assy	1
*33	70487-6	Capacitor	1
*34	89258	Retainer - Capacitor	1
*35	SD-15-3	Self-Tapping Screw 10 × 1/4 Pan Hd. "Taptite"	2
*36	WS-2-15	Washer (Shims screw to prevent bottoming)	2
37	BB-20-18	Ball Bearing N.D. #7503	1
38	118969-1	Bracket - Bearing (Pump End) (60 Hz.)	1
39	118969-2	Bracket - Bearing (Pump End) (50 Hz.)	1
	118070-1	Plug (Not Shown) (Use with items 38 & 39)	1

*1 Phase.
**2 Phase.

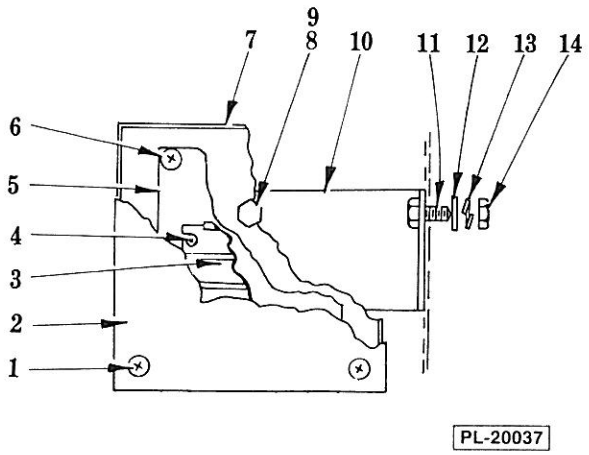

MOTOR RELAY (3 PH.)
(CRS86 & CRS103)

ILLUS. PL-20037	PART NO.	NAME OF PART17	AMT.
1	SC-71-11	Mach. Screw 10-24 × 3/8 Phil. Truss Hd	4
2	113913	Cover	1
3	88196-5-1	Relay - Thermal Overload	1
4	SD-8-25	Self-Tapping Screw 10 × 3/8 Phil. Bind. Hd., Type B	2
5	113911	Plate - Relay Mounting	1
6	SC-71-11	Mach. Screw 10-24 × 3/8 Phil. Truss Hd	4
7	113930-1	Relay Box Assy	1
8	SC-41-9	Cap Screw 5/16-18 × 1/2 Hex Hd	2
9	WL-6-22	Lock Washer 5/16 Light	2
10	113910	Bracket - Relay Box Mounting	1
11	SC-41-11	Cap Screw 5/16-18 × 3/4 Hex Hd	2
12	WS-5-32	Washer	2
13	WL-6-22	Lock Washer 5/16 Light	2
14	NS-15-11	Full Nut 5/16-18 Hex Fin	2

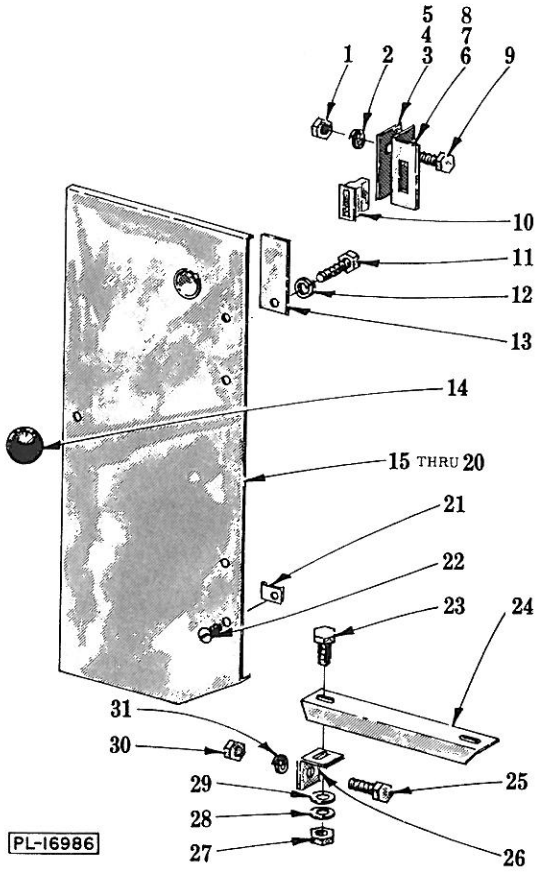

JUMPER PANEL

ILLUS. PL-16986	PART NO.	NAME OF PART[17]	AMT.
1	NS-13-11	Full Nut 5/16-18 Hex Fin	2
2	WL-3-43	Lock Washer 5/16 Light	2
3	80752	Spacer - Magnet Support (L. to R. Standard) or (R. to L. Gas or Steam)	AR
4	104142	Spacer - Magnet Support (R. to L.) (Elec. Heat) (CRS66 & CRS76)	AR
5	80752	Spacer - Magnet Support (CRS86 & CRS103) (R. to L., Elec.)	1
6	103792	Support - Magnet (L. to R. Standard) or (R. to L. Gas or Steam)	1
7	104143	Support - Magnet (R. to L.) (Elec. Heat) (CRS66 & CRS76)	1
8	103792	Support - Magnet (CRS86 & CRS103) (R. to L., Elec.)	1
9	SC-36-26	Cap Screw 5/16-18 x 7/8 Hex Hd	2
10	104135	Catch - Magnetic	1
11	SC-41-26	Cap Screw 3/8-16 x 1/2 Hex Hd	1
12	WL-6-27	Lock Washer 3/8 Light	1
13	80743	Plate - Magnet	1
14	60468	Knob	1
15	80437	Jumper Panel & Reflection Tube Assy. (R. to L.) (Gas or Steam Heat)	1
16	82816	Jumper Panel & Reflection Tube Assy. (R. to L.) (Elec. Heat) (Not Shown) (CRS66 & CRS76)	1
17	80448	Jumper Panel & Reflection Tube Assy. (R. to L.) (Elec.) (CRS86 & CRS103)	1
18	80450	Jumper Panel & Reflection Tube Assy. (L. to R.) (Gas & Steam) (CRS86 & CRS103)	1
19	80438	Jumper Panel & Reflection Tube Assy. (L. to R.) (Elec.) (CRS86 or CRS103)	1
20	79396	Panel - Jumper (L. to R.) (Not Shown) (CRS66 & CRS76)	1
21	74348	Speed Nut 10-24	4
22	SC-53-5	Mach. Screw 10-24 x 3/8 Truss Hd	4
23	SC-14-10	Cap Screw 5/16-18 x 5/8 Hex Hd	4
24	79451	Angle Tie	2
25	SC-14-10	Cap Screw 5/16-18 x 5/8 Hex Hd	2
26	79448	Support - Tie Bar	2
27	NS-15-11	Full Nut 5/16-18 Hex Fin	4
28	WL-6-22	Lock Washer 5/16 Light	4
29	WS-17-21	Washer	4
30	NS-15-11	Full Nut 5/16-18 Hex Fin	2
31	WL-6-22	Lock Washer 5/16 Light	2

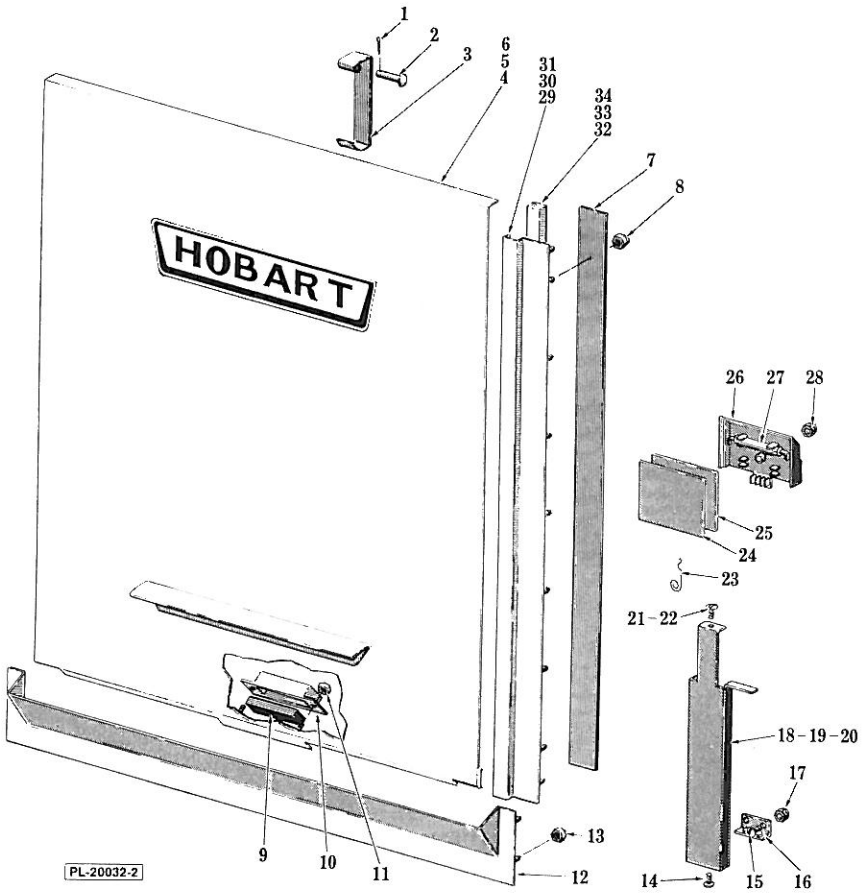
HOBART
PL-20032-2
1
2
3
6
5
4
31
30
29
34
33
32
7
8
26
27
28
25
24
23
21-22
18-19-20
17
16
15
14
13
12
9
10
11

DOOR

DOOR

ILLUS. PL-20032-2	PART NO.	NAME OF PART[17]	AMT.
1	PC-4-6	Cotter Pin 1/16 x 1/2 Lg	1
2	12114	Pin	1
3	290164	Latch - Door	1
4	290180	Door Assy. (22 5/16" Door Height)	1
5	290180-2	Door Assy. (25 5/16" Door Height)	1
6	290180-3	Door Assy. (28 5/16" Door Height)	1
7	526408	Tape - Foam	AR
8	NS-31-16	Stop Nut 10-24 "Elastic"	18
9	290160	Magnet	1
10	290159	Retainer - Magnet	1
11	NS-31-50	Stop Nut 6-32 "Elastic"	2
12	103441	Inspection Door Trough Assy	1
13	NS-31-16	Stop Nut 10-24 "Elastic"	11
14	SC-53-2	Mach. Screw 10-24 x 1/2 Truss Hd	1
15	SC-53-2	Mach. Screw 10-24 x 1/2 Truss Hd	2
16	276414-1	Wire Way Bracket Assy	1
17	NS-31-15	Stop Nut 10-24 "Elastic"	2
18	286731-1	Wire Way (R. to L., CRS86 & CRS103)	1
19	286731-2	Wire Way (Not Shown) (L. to R., CRS66 & CRS76)	1
20	286731-3	Wire Way (R. to L., CRS66 & CRS76; L. to R., CRS86 & CRS103)	1
21	SC-53-2	Mach. Screw 10-24 x 1/2 Truss Hd	1
22	74348	Speed Nut 10-24	1
23	276451	Retainer - Wire	5
24	290161-1	Door Interlock Cover Assy	2
25	290172	Insulator - Cover	2
26	286621	Bracket - Reed Switch	2
27	114941	Switch - Reed	2
28	NS-31-16	Stop Nut 10-24 "Elastic"	2
29	112379-5	Door Guide Assy. (22 5/16" Door Height)	2
30	112379-4	Door Guide Assy. (25 5/16" Door Height)	2
31	112379-6	Door Guide Assy. (28 5/16" Door Height)	2
32	112378-1	Slide - Door (22 5/16" Door Height)	2
33	112378-33	Slide - Door (25 5/16" Door Height)	2
34	112378-2	Slide - Door (28 5/16" Door Height)	2

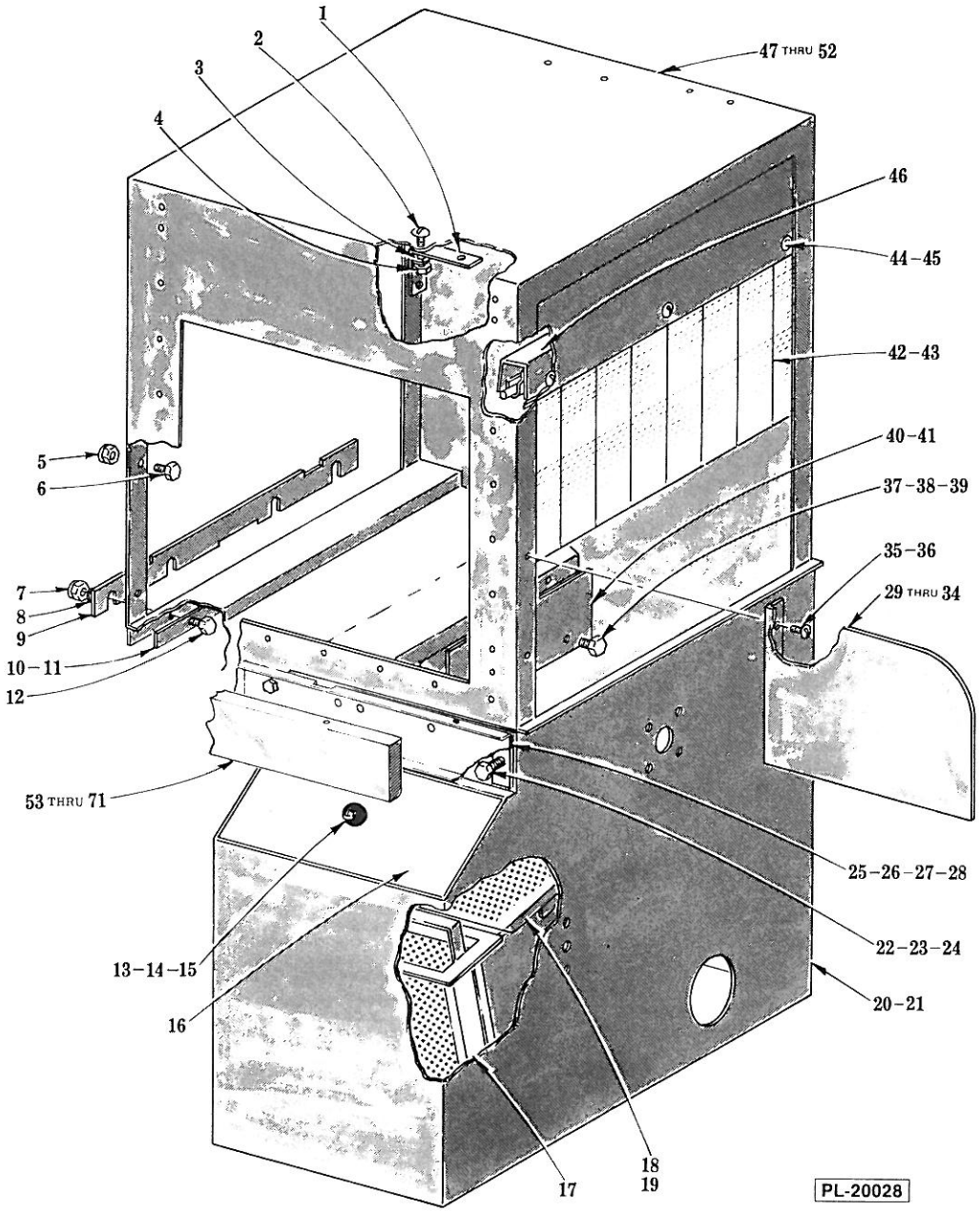

WASH CHAMBER AND TANK

ILLUS. PL-20028	PART NO.	NAME OF PART[17]	AMT.
1	79162	Hanger - Cradle Suspension Strip	2
2	SC-53-16	Mach. Screw 5/16-18 × 5/8 Truss Hd	4
3	WL-6-22	Lock Washer 5/16 Light	4
4	NS-15-11	Full Nut 5/16-18 Hex Fin	4
5	NS-31-19	Stop Nut 1/4-20 "Elastic"	15
6	SC-41-5	Cap Screw 1/4-20 × 5/8 Hex Hd	15
7	NS-31-29	Stop Nut 5/16-18 "Elastic"	4
8	WS-17-8	Washer	4
9	79254	Deflector - Wash Chamber	1
10	80931-1	Spacer - Chamber (.1345" Thk.)	AR
11	80931-2	Spacer - Chamber (.0598" Thk.)	AR

WASH CHAMBER AND TANK (Cont.)

ILLUS. PL-20028	PART NO.	NAME OF PART[17]	AMT.
12	SC-41-12	Cap Screw 5/16-18 x 7/8 Hex Hd	4
13	60468	Knob	1
14	WL-6-27	Lock Washer 3/8 Light	1
15	SC-41-26	Cap Screw 3/8-16 x 1/2 Hex Hd	1
16	79517	Strainer Chute Cover Assy	1
17	79387	Strainer Basket Assy	1
18	79371	Pan - Strainer	1
19	286830	Pan - Deflector (Not Shown)	1
20	103753	Tank Assy. (R. to L.)	1
21	103815	Tank Assy. (L. to R.) (Not Shown)	1
22	SC-41-10	Cap Screw 5/16-18 x 5/8 Hex Hd	4
23	WL-6-22	Lock Washer 5/16 Light	4
24	NS-15-11	Full Nut 5/16-18 Hex Hd	4
25	276453-2	Support - Tank (Front, R. to L., Rear, L. to R.)	1
26	276453-1	Support - Tank (Rear, R. to L., Front, L. to R.) (Not Shown)	1
27	107213	Shim - Tank Support	2
28	68911	Plate - Reinforcement	2
29	287625	Shield - Splash (22 5/16" Door Height)	2
30	287625-2	Shield - Splash (25 5/16" Door Height)	2
31	287625-3	Shield - Splash (28 5/16" Door Height)	2
32	86586	Support - Splash Shield (22 5/16" Door Height)	2
33	86586-2	Support - Splash Shield (25 5/16" Door Height)	2
34	86586-3	Support - Splash Shield (28 5/16 " Door Height)	2
35	SC-53-2	Mach. Screw 10-24 x 1/2 Truss Hd	4
36	NS-31-15	Stop Nut 10-24 "Elastic"	4
37	SC-41-12	Cap Screw 5/16-18 x 7/8 Hex Hd	2
38	SC-41-10	Cap Screw 5/16-18 x 5/8 Hex Hd	2
39	NS-31-29	Stop Nut 5/16-18 "Elastic"	2
40	107214	Shield - Splash	1
41	101494	Spacer - Splash Shield	2
42	120151-1	Curtain - Splash (10-C-1)	1
43	120266-1	Rod - Splash Curtain	1
44	SC-53-5	Mach. Screw 10-24 x 3/8 Truss Hd	3
45	NS-31-15	Stop Nut 10-24 "Elastic"	3
46	79047	Curtain Hook & Drip Shield Assy	1
47	103768-2	Chamber Assy. (22 5/16" Door Height) (R. to L.) (Incls. items 1, 2, 3, 4, 44, 45, 46 & Door Guide Assy.)	1
48	103776-2	Chamber Assy. (22 5/16" Door Height) (L. to R.) (Incls. items 1, 2, 3, 4, 44, 45, 46 & Door Guide Assy.)	1
49	105475-2	Chamber Assy. (25 5/16" Door Height) (R. to L.) (Incls. items 1, 2, 3, 4, 44, 45, 46 & Door Guide Assy.)	1
50	105479-2	Chamber Assy. (25 5/16" Door Height) (L. to R.) (Incls. items 1, 2, 3, 4, 44, 45, 46 & Door Guide Assy.)	1
51	105475-3	Chamber Assy. (28 5/16" Door Height) (R. to L.) (Incls. items 1, 2, 3, 4, 44, 45, 46 & Door Guide Assy.)	1
52	105479-3	Chamber Assy. (28 5/16" Door Height) (L. to R.) (Incls. items 1, 2, 3, 4, 44, 45, 46 & Door Guide Assy.)	1
53	290163-1	Panel - Front Trim (CRS66, R-L) (W/Door Interlock)	1
54	290167-1	Panel - Front Trim (CRS66, L-R) (W/Door Interlock)	1
55	79909	Panel - Front Trim (CRS66) (W/O Door Interlock)	1
56	78874	Panel - Rear Trim (CRS66)	1
57	287503	Panel - Front Trim (CRS76, R-L) (W/Door Interlock)	1
58	286797	Panel - Front Trim (CRS76, L-R) (W/Door Interlock)	1
59	80125	Panel - Front Trim (CRS76) (W/O Door Interlock)	1
60	80126	Panel - Front Rear Trim (CRS76)	1
61	286798	Panel - Front Trim (CRS86, R-L) (W/Door Interlock)	1
62	286799	Panel - Front Trim (CRS86, L-R) (W/Door Interlock)	1
63	80077	Panel - Front Trim (CRS86) (W/O Door Interlock)	1
64	79824	Panel - Rear Trim (CRS86)	1
65	286928	Panel - Front Trim (CRS103, R-L) (W/Door Interlock)	1
66	286927	Panel - Front Trim (CRS103, L-R) (W/Door Interlock)	1
67	80421	Panel - Front Trim (CRS103) (W/O Door Interlock)	1
68	80039	Panel - Rear Trim (CRS103)	1
69	SC-53-2	Mach. Screw 10-24 x 1/2 Truss Hd	AR
70	66307	Spacer - Trim Panel	AR
71	75895	Speed Nut 10-24	AR
	79437	Strainer Pan Chute Cover Assy. (Incls. items 13 thru 16)	1
	120152-1	Splash Curtain Assy. (10-C-1) (Incls. items 42 & 43)	1

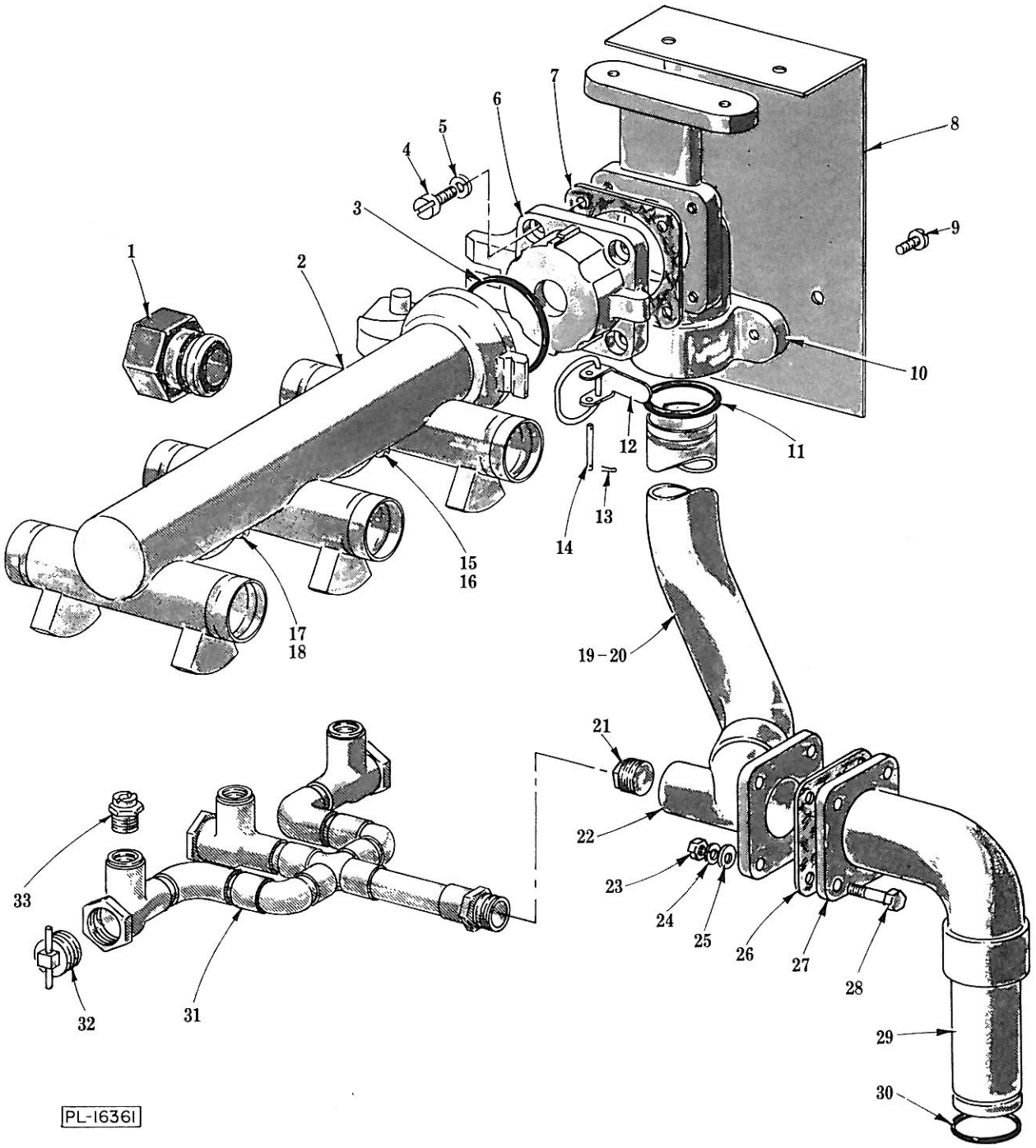

WASH PIPING
(½ H.P. MOTOR)

WASH PIPING
(½ H.P. MOTOR)

ILLUS. PL-16361	PART NO.	NAME OF PART 17	AMT.
1	106769	End Cap - Hex	6
2	107977	Upper Arm Assy. (Incls. items 15 thru 18)	1
3	67500-49	"O" Ring	1
4	SC-24-22	Mach. Screw 3/8-16 x 7/8 Fil. Hd	4
5	WL-6-29	Lock Washer 3/8 High Collar	4
6	83084-4	Hinge - Upper Discharge Connection	1
7	107477	Gasket - Hinge Casting	1
8	103790	Plate - Reinforcement	1
9	SC-53-16	Mach. Screw 5/16-18 x 5/8 Truss Hd	4
10	107132	Ell - Upper Wash	1
11	67500-13	"O" Ring	2
12	276030	Lever Bracket & Clamp Assy	1
13	PC-5-25	Cotter Pin 1/32 x 1/2	2
14	83076	Pin - Bracket	1
15	SC-69-6	Mach. Screw 1/4-20 x 3/8 Rd. Hd. "Nylok"	1
16	NS-154-1	Full Nut 1/4-20 Hex Fin	1
17	61521	Baffle - Wash Pipe	1
18	SC-69-6	Mach. Screw 1/4-20 x 3/8 Rd. Hd. "Nylok"	1
19	103799	Tube - Wash (R. to L. Operation)	1
20	103807	Tube - Wash (L. to R. Operation) (Not Shown)	1
21	FP-28-17	Plug 3/4 Sq. Hd. Pipe	1
22	68758	Connection 60° Wash Pipe	1
23	NS-15-11	Full Nut 5/16-18 Hex Fin	4
24	WL-6-22	Lock Washer 5/16 Light	4
25	WS-5-32	Washer	4
26	68819	Gasket - Wash Pipe Connection	1
27	68759	Connection 90° Wash Pipe	1
28	SC-41-15	Cap Screw 5/16-18 x 1 1/4 Hex Hd	4
29	103515	Tube - Pump Discharge	1
30	67500-13	"O" Ring	2
31	105313	Lower Wash Arm Assy	1
32	80738	Pipe Plug & Pin Assy	3
33	68882	Nozzle	3
	105312	Lower Wash Arm Assy. (Incls. items 31, 32 & 33)	1
	107976	Upper Wash Arm Assy. (Incls. items 1, 2 & 3)	1

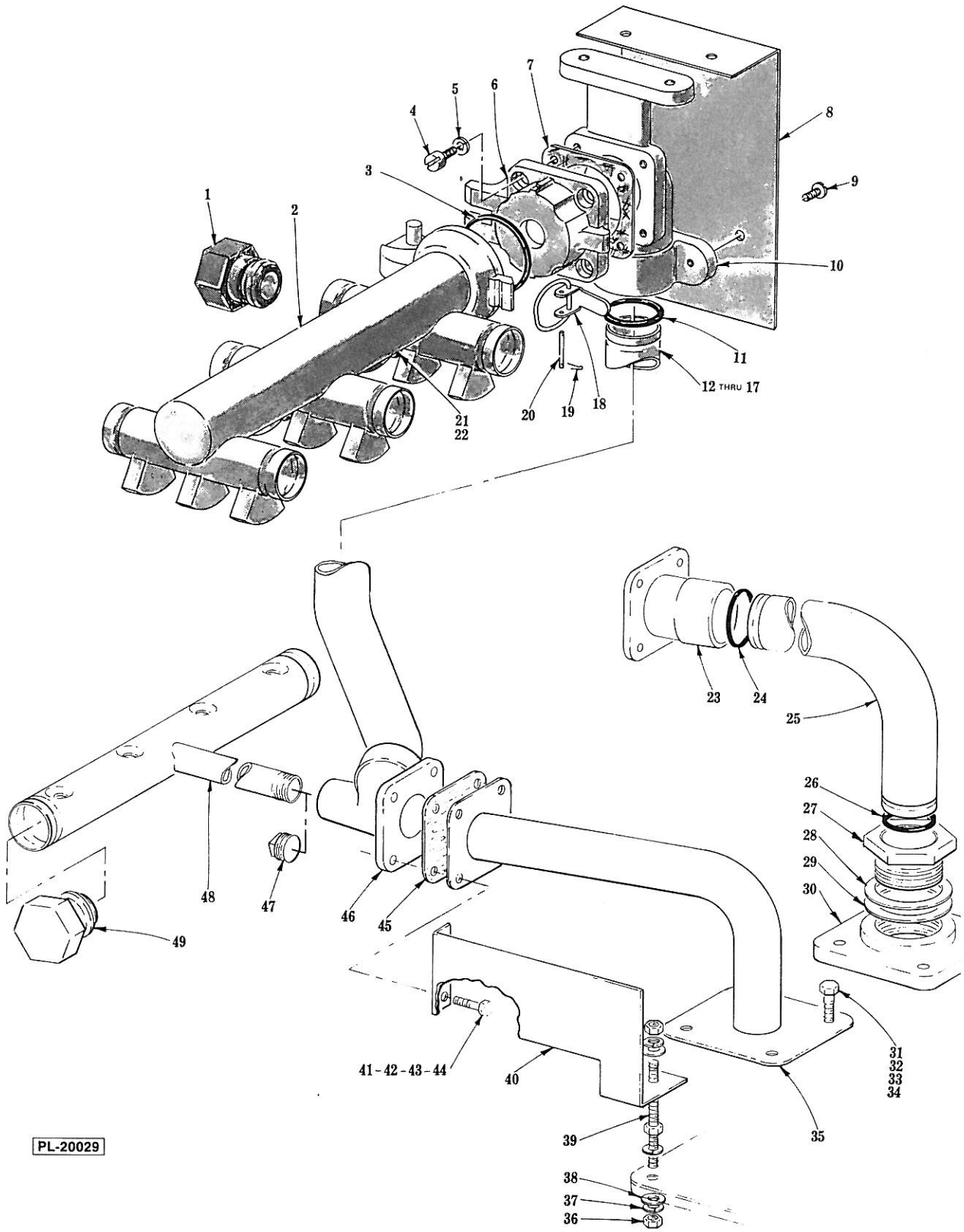

WASH PIPING
(1 H.P. MOTOR)

WASH PIPING
(1 H.P. MOTOR)

ILLUS. PL-20029	PART NO.	NAME OF PART17	AMT.
1	106769	End Cap - Hex	6
2	107965	Upper Arm Assy. (Incls. items 21 & 22)	1
3	67500-49	"O" Ring	1
4	SC-24-22	Mach. Screw 3/8-16 x 7/8 Fil. Hd	4
5	WL-6-29	Lock Washer 3/8 High Collar	4
6	83084-4	Hinge - Upper Discharge Connection	1
7	107477	Gasket - Hinge Casting	1
8	103790	Plate - Reinforcement	1
9	SC-53-16	Mach. Screw 5/16-18 x 5/8 Truss Hd	4
10	107132	Ell - Upper Wash	1
11	76500-13	"O" Ring	2
12	103799-1	Tube - Wash (R. to L.) (22 5/16" Door Height)	1
13	103807-1	Tube - Wash (L. to R.) (22 5/16" Door Height)	1
14	103799-2	Tube - Wash (R. to L.) (25 5/16" Door Height)	1
15	103807-2	Tube - Wash (L. to R.) (25 5/16" Door Height)	1
16	103799-3	Tube - Wash (R. to L.) (28 5/16" Door Height)	1
17	103807-3	Tube - Wash (L. to R.) (28 5/16" Door Height)	1
18	276030	Lever Bracket & Clamp Assy	1
19	PC-5-25	Cotter Pin 1/32 x 1/2	2
20	83076	Pin - Bracket	1
21	61521	Baffle - Wash Pipe	2
22	SC-69-6	Mach. Screw 1/4-20 x 3/8 Rd. Hd. "Nylok"	2
23	103818	Connection 13° Wash Pipe	1
24	67500-13	"O" Ring	1
25	103516	Tube - Pump Discharge	1
26	67500-13	"O" Ring	1
27	82645	Discharge - Pump	1
28	21104	Washer (SST)	1
29	21105	Washer (Lead)	1
30	103262	Flange - Pump	1
31	SC-41-34	Cap Screw 3/8-16 x 2 Hex Hd	3
32	WS-6-44	Washer	3
33	WL-6-27	Lock Washer 3/8 Light	3
34	NS-15-13	Full Nut 3/8-16 Hex Fin	3
35	292628	Pump Discharge Assy	1
36	NS-15-13	Full Nut 3/8-16 Hex Fin	4
37	WL-6-27	Lock Washer 3/8 Light	2
38	WS-6-44	Washer	3
39	103821	Rod - Pump Support	1
40	103820	Support	1
41	SC-41-15	Cap Screw 5/16-18 x 1 1/8 Hex Hd	4
42	WS-5-32	Washer	4
43	WL-6-22	Lock Washer 5/16 Light	4
44	NS-15-11	Full Nut 5/16-18 Hex Fin	4
45	68819	Gasket - Wash Pipe Connection	1
46	68758	Connection 60° Wash Pipe	1
47	FP-28-17	Plug 3/4 Sq. Hd. Pipe	1
48	295167	Lower Wash Arm Assy. (Incls. item 49)	1
49	106769	End Cap	3
	107964	Upper Wash Arm Assy. (Incls. items 1, 2 & 3)	1

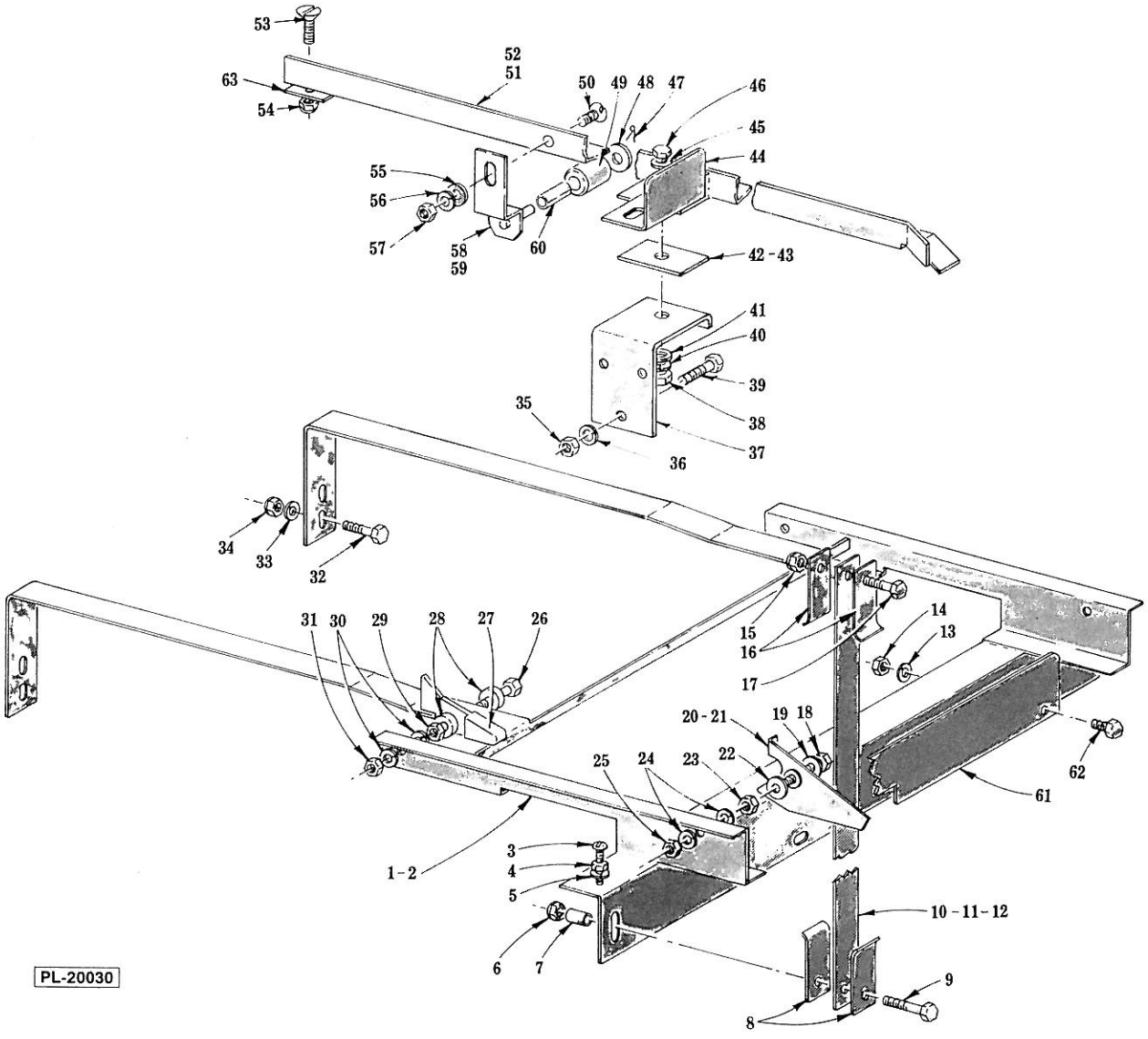

CRADLE AND TRACKS

CRADLE AND TRACKS

ILLUS. PL-20030	PART NO.	NAME OF PART[17]	AMT.
**1	119555-1	Cradle Assy	1
*2	119555-3	Cradle Assy. (Not Shown)	1
3	SC-21-44	Mach. Screw ¼-20 x 1½ Rd. Hd	2
4	NS-15-1	Full Nut ¼-20 Hex Fin	2
5	WL-6-16	Lock Washer ¼ Light	2
6	NS-32-14	Stop Nut 5/16-18 "Flexloc"	2
7	65706	Spacer	2
8	11545	Support - Suspension Strip	4
9	SC-41-15	Cap Screw 5/16-18 x 1¼ Hex Hd	2
10	11564-10	Strip - Cradle Suspension (22 5/16" Door Height)	2
11	11564-11	Strip - Cradle Suspension (25 5/16" Door Height)	2
12	11564-12	Strip - Cradle Suspension (28 5/16" Door Height)	2
13	WL-6-22	Lock Washer 5/16 Light	2
14	NS-15-11	Full Nut 5/16-18 Hex Fin	2
15	NS-32-14	Stop Nut 5/16-18 "Flexloc"	2
16	11545	Support - Suspension Strip	4
17	SC-41-11	Cap Screw 5/16-18 x ¾ Hex Hd	2
18	SC-41-33	Cap Screw 3/8-16 x 1¾ Hex Hd	2
19	WS-18-4	Washer	2
20	286594	Dog Assy. (Front, R. to L.; Rear, L. to R.)	1
21	286595	Dog Assy. (Rear, R. to L.; Front, L. to R.) (Not Shown)	1
22	WS-18-4	Washer	2
23	NS-15-13	Full Nut 3/8-16 Hex Fin	2
24	WL-6-27	Lock Washer 3/8 Light	4
25	NS-15-13	Full Nut 3/8-16 Hex Fin	2
*26	SC-41-33	Cap Screw 3/8-16 x 1¾ Hex Hd	2
*27	101187-1	Dog Assy	2
*28	101494	Spacer	4
*29	NS-15-13	Full Nut 3/8-16 Hex Fin	2
*30	WL-6-27	Lock Washer 3/8 Light	4
*31	NS-15-13	Full Nut 3/8-16 Hex Fin	2
32	SC-41-12	Cap Screw 5/16-18 x 7/8 Hex Hd	4
33	WS-17-21	Washer	4
34	NS-31-29	Stop Nut 5/16-18 "Elastic"	4
35	NS-15-11	Full Nut 5/16-18 Hex Fin	6
36	WL-6-22	Lock Washer 5/16 Light	6
37	103834	Bracket - Rack Track	2
38	NS-15-13	Full Nut 3/8-16 Hex fin	2
39	SC-41-12	Cap Screw 5/16-18 x 7/8 Hex Hd	6
40	WL-6-27	Lock Washer 3/8 Light	2
41	WS-6-27	Washer	2
42	103833-1	Shim - Rack Track (.104" Thk.)	AR
43	103833-2	Shim - Rack Track (.059" Thk.)	AR
44	107316	Shield - Splash	2
45	WS-6-27	Washer	2
46	SC-41-31	Cap Screw 3/8-16 x 1¼ Hex Hd	2
47	PC-5-11	Cotter Pin 3/32 x ¾	2
48	WS-18-30	Washer	2
49	79585	Roller	2
50	SC-22-45	Mach. Screw 5/16-18 x ¾ Flat Hd	2
51	288268	L.H. Rack Track & Support Assy	1
52	288269	R.H. Rack Track & Support Assy. (Not Shown)	1
53	SC-22-47	Mach. Screw 5/16-18 x 1 Flat Hd	2
54	NS-31-29	Stop Nut 5/16-18 "Elastic"	2
55	WS-17-8	Washer	2
56	WL-6-22	Lock Washer 5/16 Light	2
57	NS-15-11	Full Nut 5/16-18 Hex Fin	2
**58	120042	Roller Support Assy	2
*59	75629	Roller Support Assy	2
60	79586	Bushing - Roller	2
61	79141	Deflector - Cradle End Water	1
62	SC-41-10	Cap Screw 5/16-18 x 5/8 Hex Hd	2
63	79359	Spacer - Rack Support	2

*Use with 10" x 20", 14" x 20", 16" x 20" & 20" x 20" Racks.
**Use with 20" x 20" Racks.

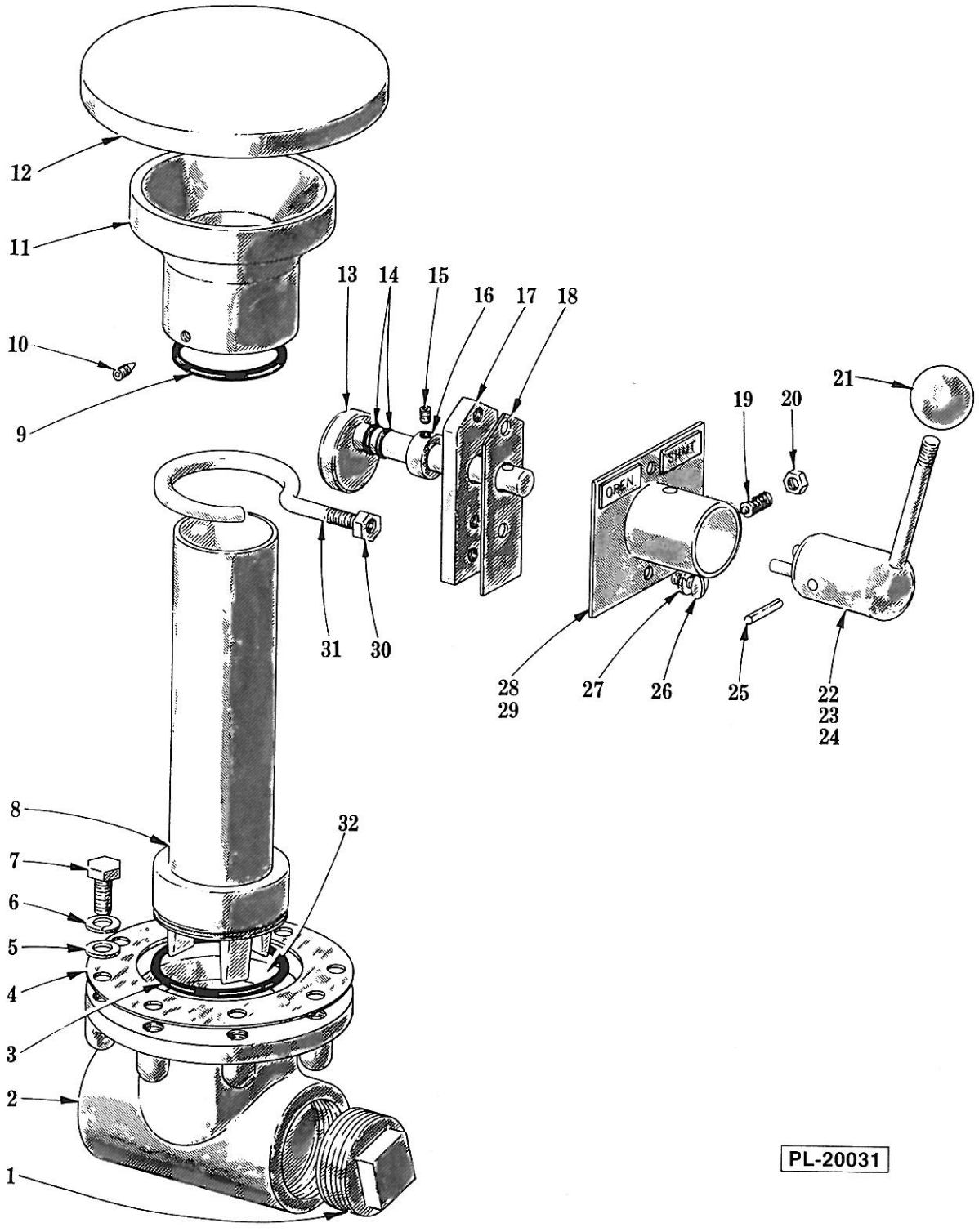

DRAIN AND OVERFLOW UNIT

DRAIN AND OVERFLOW UNIT

ILLUS. PL-20031	PART NO.	NAME OF PART[17]	AMT.
1	FP-28-32	Plug - 2" Sq. Hd. Pipe	1
2	107164	Drain Valve Body & Sleeve Assy. (Incls. item 32)	1
3	67500-16	"O" Ring	1
4	12077	Gasket - Drain Valve	1
5	WS-6-44	Washer	8
6	WL-6-27	Lock Washer 3/8 Light	8
7	SC-41-28	Cap Screw 3/8-16 x 3/4 Hex Hd	8
8	81953	Overflow Pipe, Drain Plug & "O" Ring Assy. (Incls. item 3)	1
9	67500-22	"O" Ring	1
10	SC-50-27	Set Screw 10-24 x 1/2 Sq. Hd., Cup Pt	3
11	88263	Drain Overflow & "O" Ring Assy. (Incls. items 9 & 10)	1
12	185765	Overflow Cover Assy	1
13	77464-1	Drain Lift Cam & Shaft Assy	1
14	67500-6	"O" Ring	2
15	SC-50-26	Set Screw 10-24 x 3/8 Sq. Hd., Cup Pt	1
16	77461	Collar - Adjusting	1
17	74088	Bracket - Drain Support	1
18	74044	Gasket - Drain Support Bracket	1
*19	87297	Drain Shaft Lock Assy. (3/8")	1
*20	NS-18-14	Jam Nut 3/8-16 Hex Fin	1
21	60468	Knob	1
22	77462	Drain LIft Hub, Handle & Bushing Assy. (W/O Auto Fill)	1
*23	82335	Drain Lift Hub, Handle & Bushing Assy. (L. to R.)	1
*24	105139	Drain Lift Hub, Handle & Bushing Assy. (R. to L.)	1
25	RP-2-3	Rollpin 3/16 Dia. x 1 1/4 Lg	1
26	SC-53-16	Mach. Screw 5/16-18 x 5/8 Truss Hd	2
27	WL-6-22	Lock Washer 5/16 Light	2
28	88294	Drain Stop & Identification Plate Assy. (W/O Auto Fill)	1
*29	112809	Drian Stop & Identification Plate Assy	1
30	NS-15-11	Full Nut 5/16-18 Hex Fin	1
31	77457	Support - Drain Pipe	1
32	106283	Sleeve - Drain Valve Body	1

*Use with Automatic Fill Machine.

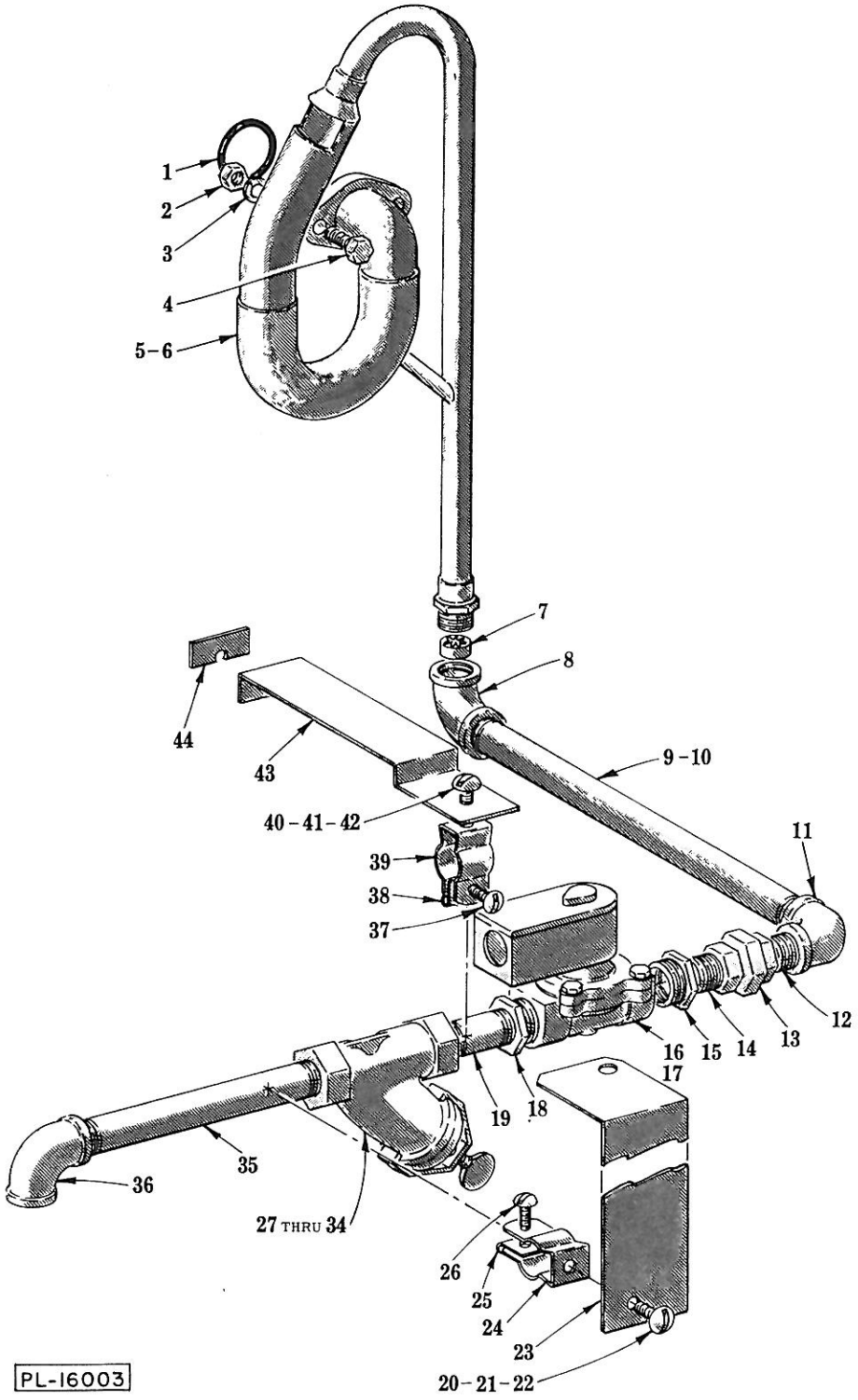

TEMPERATURE CONTROL (PIPING)

TEMPERATURE CONTROL (PIPING)

ILLUS. PL-16003	PART NO.	NAME OF PART[17]	AMT.
1	67500-12	"O" Ring	1
2	NS-15-11	Full Nut 5/16-18 Hex Fin	2
3	WL-6-22	Lock Washer 5/16 Light	2
4	SC-41-12	Cap Screw 5/16-18 x 7/8 Hex Hd	2
5	89446	Fill Piping Assy. (R. to L.)	1
6	89448	Fill Piping Assy. (L. to R.) (Not Shown)	1
7	60566	Spring - Anti-Splash	1
8	FP-15-16	Elbow - 1/2 x 90°	1
*9	FP-40-88	Nipple - 1/2 x 6 Lg. (T.B.E.)	1
**10	FP-41-10	Nipple - 1/2 x 9 3/4 Lg. (T.B.E.)	1
11	FP-15-16	Elbow - 1/2 x 90°	1
12	FP-40-42	Nipple - 1/2 x 1 1/8 Lg. (T.B.E.)	1
13	FP-22-12	Union - 1/2 (Grd. Seat)	1
14	FP-40-42	Nipple - 1/2 x 1 1/8 Lg. (T.B.E.)	1
15	FP-27-22	Bushing - 3/4 to 1/2 Hex Reducing	1
16	89445-1	Valve - 3/4" Solenoid (115 V., 50/60 Hz.) (Pilot Circuit)	1
17	89445-2	Valve - 3/4" Solenoid (200-240 V., 60 Hz.; 220 V., 50 Hz.)	1
18	FP-27-22	Bushing - 3/4 to 1/2 Hex Reducing	1
19	FP-40-52	Nipple - 1/2 x 2 1/4 Lg. (T.B.E.)	1
**20	SC-8-68	Mach. Screw 1/4-20 x 1/2 Rd. Hd	1
**21	WL-3-36	Lock Washer 1/4 Light	1
**22	NS-13-1	Full Nut 1/4-20 Hex Fin	1
**23	118881	Support - Pipe	1
**24	62271	Hanger (Size 0)	1
**25	74348	Speed Nut 10-24	1
**26	SC-60-85	Mach. Screw 10-24 x 1 Rd. Hd	1
27	82227	Line Strainer (1/2") (Cast Iron) (Incls. items 29, 30, 31, 33 & 34)	1
28	102515	Line Strainer (1/2") (Brass) (Incls. items 29, 30, 32, 33 & 34)	1
29	82238	Thumb Screw	1
30	82236	Clamp (1/2" Line Strainer)	1
31	82233	Plate - Seal (1/2" Line Strainer) (Use with item 27)	1
32	102518	Plate - Seal (1/2" Line Strainer) (Use with item 28)	1
33	67500-59	"O" Ring	1
34	82230	Screen (1/2" Line Strainer)	1
35	FP-40-94	Nipple 1/2 x 6 5/8 Lg. (T.B.E.)	1
36	FP-15-16	Elbow 1/2 x 90°	1
*37	SC-60-85	Mach. Screw 10-24 x 1 Rd. Hd.	1
*38	74348	Speed Nut 10-24	1
*39	62271	Hanger (Size 0)	1
*40	SC-8-68	Mach. Screw 1/4-20 x 1/2 Rd. Hd	1
*41	WL-3-36	Lock Washer 1/4 Light	1
*42	NS-13-1	Full Nut 1/4-20 Hex Fin	1
*43	103897	Support - Piping	1
*44	120161	Spacer - Support	1
	104365-1	Coil - Solenoid Valve (115 V., 50/60 Hz.) (Pilot Circuit)	1
	104365-2	Coil - Solenoid Valve (200-240 V., 60 Hz.; 220 V., 50 Hz.)	1
	104354	Solenoid Valve Kit	1

*1/2 H.P. Motor.
**1 H.P. Motor.

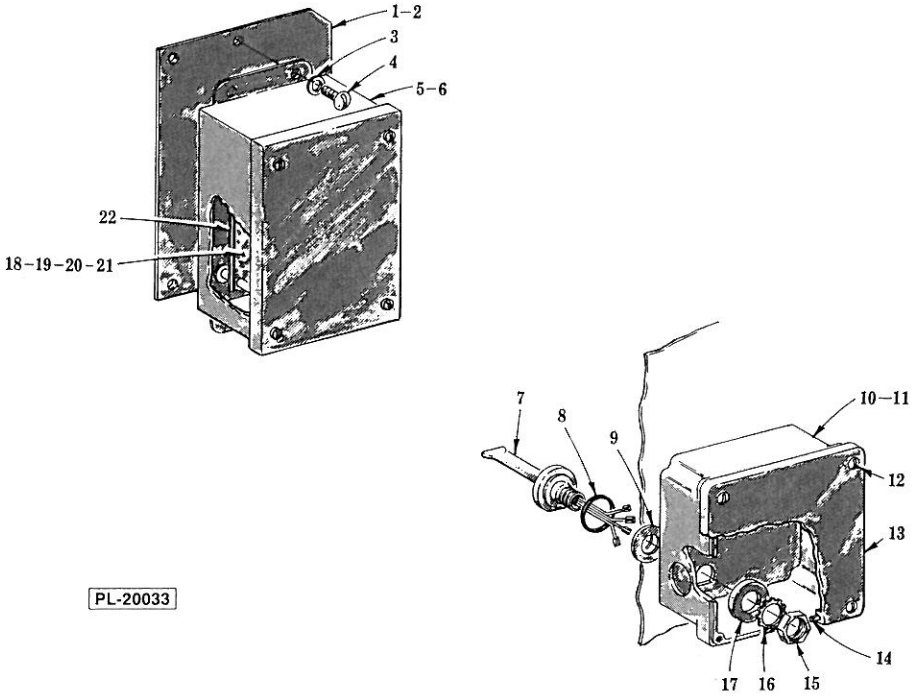

TEMPERATURE CONTROL (ELECTRICAL)

ILLUS. PL-20033	PART NO.	NAME OF PART17	AMT.
*1	103898-1	Bracket & Weld Nut Assy	1
**2	103898-3	Bracket & Weld Nut Assy. (Not Shown)	1
3	WL-3-36	Lock Washer ¼ Light	4
4	SC-8-81	Mach. Screw ¼-20 × ½ Rd. Hd	4
*5	118537-4	Box - Thermostat	1
**6	118537-1	Box - Thermostat (Not Shown)	1
7	119270	Probe & Switch Assy	1
8	67500-72	"O" Ring	1
9	111942	Gasket - Probe	1
10	288474-2	Junction Box & Terminal Assy. (R. to L.)	1
11	288474-3	Junction Box & Terminal Assy. (Not Shown) (L. to R.)	1
12	SD-12-20	Self-Tapping Screw 8 × ½ Phil. Truss Hd., Type 23	4
13	288465	Lid & Gasket Assy. (Incls. item 14)	1
14	112007	Gasket (Lid)	1
15	NS-18-28	Jam Nut ½-20 Hex Fin	1
16	WL-14-31	Lock Washer ½ Ext. Shakeproof	1
17	WS-10-40	Washer - Thrust	1
18	294099-1	Solid State Thermostat Assy. (115 V., 50/60 Hz.) (Pilot Circuit)	1
19	294099-2	Solid State Thermostat Assy. (200-240 V., 60 Hz.; 220 V., 50 Hz.)	1
20	SC-98-7	Mach. Screw 4-40 × 1¾ Rd. Hd	3
21	WS-28-12	Washer	3
22	118227	Plate - Thermostat Mounting	1

*R. to L. Operation.
**L. to R. Operation.

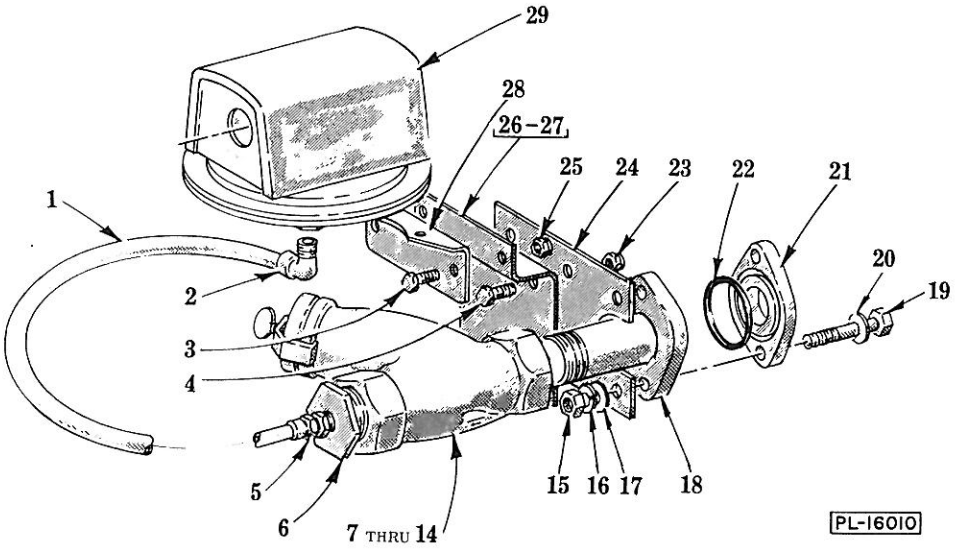

AUTOMATIC FILL (PRESSURE SWITCH)

ILLUS. PL-16010	PART NO.	NAME OF PART17	AMT.
1	102640	Tube ¼" O.D. x 18" Lg	1
2	102639	Elbow 90° Male (¼" Pipe Thd. x ¼" Tube)	1
3	SC-67-6	Mach. Screw 10-24 x ½ Trimmed Hex Hd	2
4	SC-41-5	Cap Screw ¼-20 x ⅝ Hex Hd	3
5	112389	Connector - Straight Male (¼" Pipe Thd. x ¼" Tube)	1
6	FP-27-15	Bushing ¾ to ¼ Hex Reducing	1
7	82228	Line Strainer (¾") (Cast Iron) (Incls. items 9, 10, 12, 13 & 14)	1
8	102516	Line Strainer (¾") (Brass) (Incls. items 9, 11, 12, 13 & 14)	1
9	82231	Screen (¾" Line Strainer)	1
10	82234	Plate - Seal (¾" Line Strainer) (Use with item 7)	1
11	102517	Plate - Seal (¾" Line Strainer) (Use with item 8)	1
12	82236	Clamp (¾" Line Strainer)	1
13	82238	Thumb Screw	1
14	67500-59	"O" Ring (¾" Line Strainer)	1
15	NS-15-11	Full Nut 5/16-18 Hex Fin	2
16	WL-6-22	Lock Washer 5/16 Light	2
17	WS-5-32	Washer	2
18	63262-8	Flange - Nipple Assy	1
19	SC-41-17	Cap Screw 5/16-18 x 1½ Hex Hd	2
20	WS-5-32	Washer	2
21	21358-6	Flange	1
22	67500-12	"O" Ring	2
23	NS-31-19	Stop Nut ¼-20 "Elastic"	3
24	102626	Bracket - Flange	1
25	NS-31-15	Stop Nut 10-24 "Elastic"	2
26	117005	Support - Bracket (R. to L.)	1
27	117007	Support - Bracket (L. to R.) (Not Shown)	1
28	102638	Bracket - Pressure Switch	1
29	74627	Switch - Pressure	1

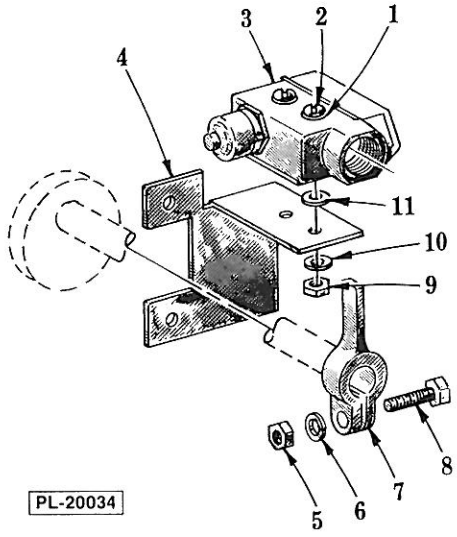

AUTOMATIC FILL (SWITCH ARM)

ILLUS. PL-20034	PART NO.	NAME OF PART17	AMT.
1	WS-2-6	Washer	2
2	SC-27-24	Mach. Screw 6-32 x 1½ Rd. Hd	2
3	87711-60-1	Switch - Interlock (Incls. items 1, 2, 9 & 11)	1
4	82005	Bracket - Interlock Switch	1
5	NS-15-1	Full Nut ¼-20 Hex Fin	1
6	WL-6-16	Lock Washer ¼ Light	1
7	82007	Arm - Switch	1
8	SC-41-2	Cap Screw ¼-20 x 1 Hex Hd	1
9	NS-10-6	Mach. Nut 6-32 Hex	2
10	WL-6-40	Lock Washer 6 Light	2
11	WS-2-6	Washer	2

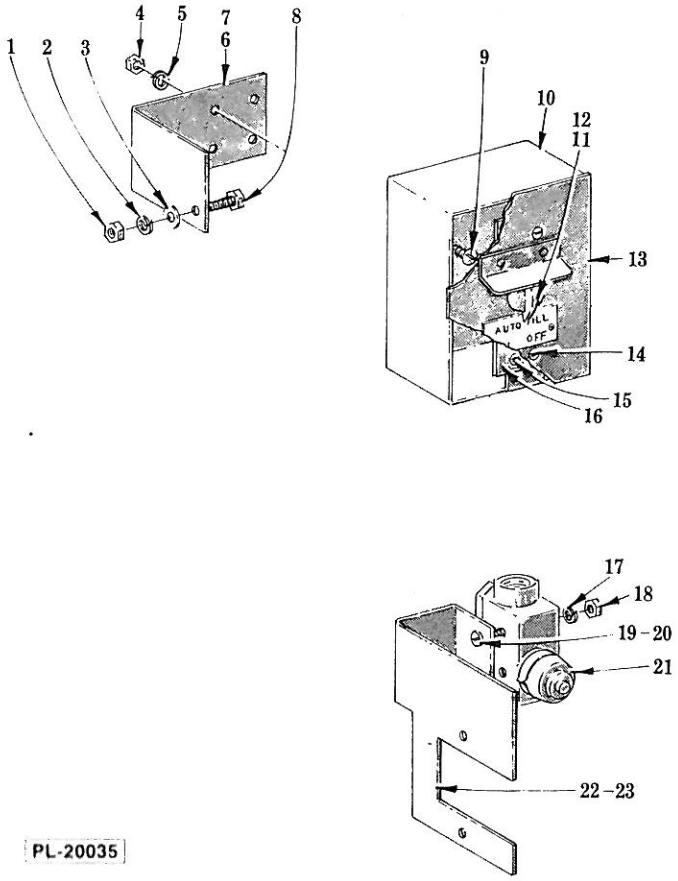

PL-20035

AUTOMATIC FILL (ROTARY SWITCH)
(CRS66 & CRS76)

ILLUS. PL-20035	PART NO.	NAME OF PART17	AMT.
1	NS-15-11	Full Nut 5/16-18 Hex Fin	2
2	WL-6-22	Lock Washer 5/16 Light	2
3	WS-5-32	Washer	2
4	NS-9-22	Mach. Nut 10-24 Hex	2
5	WL-3-20	Lock Washer 10 Light	2
6	74713	Bracket - Switch Box Mounting (1 Phase)	1
7	114208	Bracket - Switch Box Mounting (3 Phase)	1
8	SC-41-11	Cap Screw 5/16-18 x 3/4 Hex Hd	2
9	SC-9-25	Mach. Screw 10-24 x 5/8 Rd. Hd	2
10	77092	Switch Box Assy	1
11	82357	Rotary Switch & Knob Assy. (Incls. item 12)	1
12	288758	Knob - Rotary Switch	1
13	82943	Switch Box Cover & Auto. Fill Plate Assy	1
14	SC-14-66	Mach. Screw 6-32 x 5/16 Flat Hd	2
15	SC-14-66	Mach. Screw 6-32 x 5/16 Flat Hd	2
16	82002	Bracket - Switch	1
17	WL-6-40	Lock Washer 6 Light	2
18	NS-10-6	Mach. Nut 6-32 Hex	2
19	SC-27-24	Mach. Screw 6-32 x 1½ Rd. Hd	2
20	WS-2-6	Washer	4
21	87711-60-1	Switch - Interlock (Incls. items 18, 19 & 20)	1
22	105138	Bracket - Interlock Switch (R. to L.)	1
23	82336	Bracket - Interlock Switch (L. to R.)	1

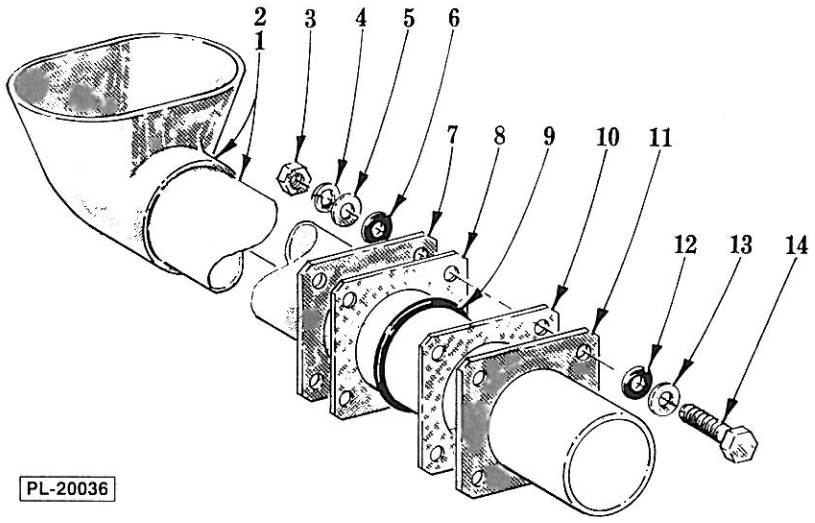

FLOWBACK PIPING
(CRS66 & CRS76)

ILLUS. PL-20036	PART NO.	NAME OF PART17	AMT.
1	288628	Overflow Tube Assy. (CRS66)	1
2	79032-2	Overflow Tube Assy. (CRS76)	1
3	NS-15-11	Full Nut 5/16-18 Hex Fin	8
4	WL-6-22	Lock Washer 5/16 Light	8
5	WS-17-21	Washer	8
6	508454	Sealer (1/8" Rd.)	AR
7	120115	Retainer - Seal	2
8	120603	Gasket	2
9	77621-2	Ring - Sealing	2
10	120603	Gasket	2
11	120115	Retainer - Seal	2
12	508454	Sealer (1/8" Rd.)	AR
13	WS-17-21	Washer	8
14	SC-41-14	Cap Screw 5/16-18 x 1 1/8 Hex Hd	8

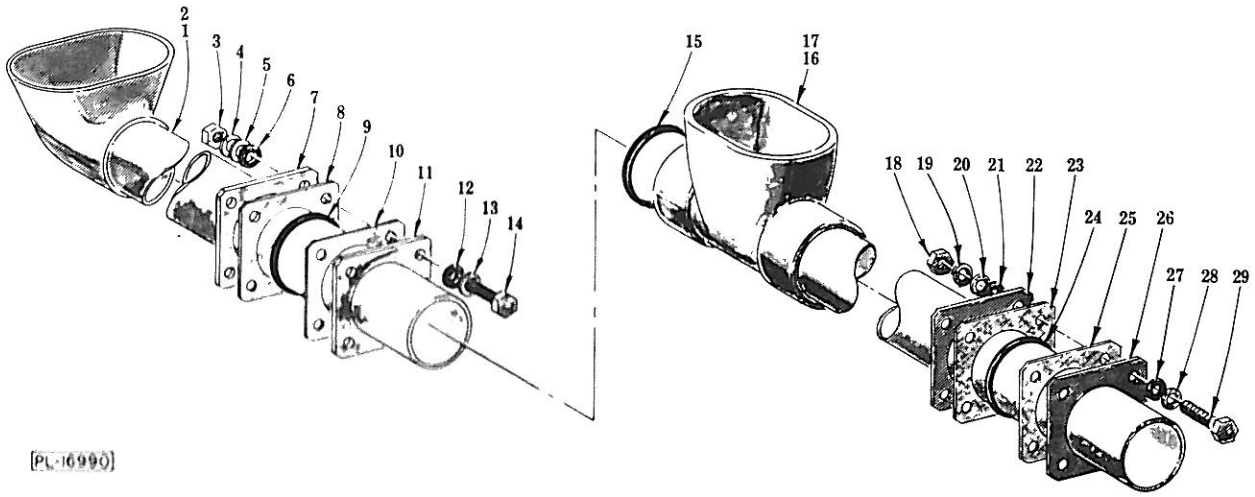

FLOWBACK PIPING
(CRS86 & CRS103)

ILLUS. PL-16990	PART NO.	NAME OF PART17	AMT.
1	83751-1	Rinse Tank Overflow Tube Assy. (CRS86)	1
2	83751-2	Rinse Tank Overflow Tube Assy. (CRS103)	1
3	NS-15-11	Full Nut 5/16-18 Hex Fin	4
4	WL-6-22	Lock Washer 5/16 Light	4
5	WS-17-21	Washer	4
6	508454	Sealer (1/8" Rd.)	AR
7	120115	Retainer - Seal	1
8	120603	Gasket	1
9	77621-1	Ring - Sealing	1
10	120603	Gasket	1
11	120115	Retainer - Seal	1
12	508454	Sealer (1/8" Rd.)	4
13	WS-17-21	Washer	4
14	SC-41-14	Cap Screw 5/16-18 x 1 1/8 Hex Hd	4
15	67500-19	"O" Ring	2
16	79889-1	Wash Tank Overflow Tube Assy. (CRS86)	1
17	79889-2	Wash Tank Overflow Tube Assy. (CRS103)	1
18	NS-15-11	Full Nut 5/16-18 Hex Fin	8
19	WL-6-22	Lock Washer 5/16 Light	8
20	WS-17-21	Washer	8
21	508454	Sealer (1/8" Rd.)	AR
22	120115	Retainer - Seal	2
23	120603	Gasket	2
24	77621-2	Ring - Sealing	2
25	120603	Gasket	2
26	120115	Retainer - Seal	2
27	508454	Sealer (1/8" Rd.)	AR
28	WS-17-21	Washer	8
29	SC-41-14	Cap Screw 5/16-18 x 1 1/8 Hex Hd	8

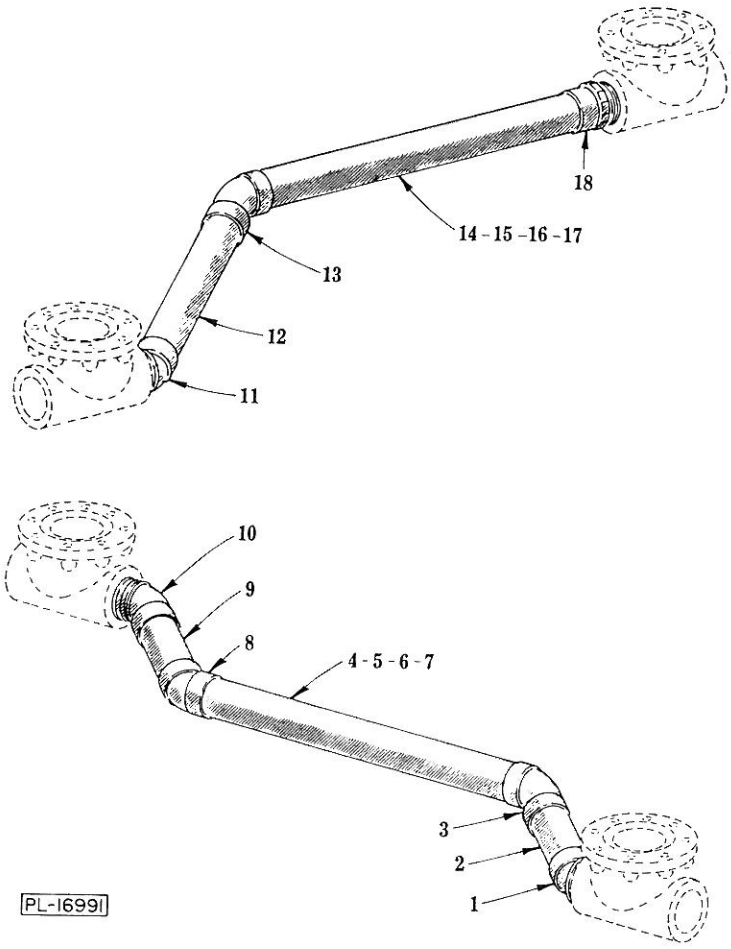

COMMON DRAIN

ILLUS. PL-16991	PART NO.	NAME OF PART[17]	AMT.
*1	79896	Elbow 45° (2″ Tube × 2″ Male Pipe)	1
*2	79969-31	Tube 2″ × 6¼″ Lg	1
*3	79894	Elbow 45° (2″ Tube × 2″ Tube)	1
*4	79969-103	Tube 2″ × 20 11/16″ Lg. (CRS86)	1
*5	79969-104	Tube 2″ × 25 11/16″ Lg. (CRS76)	1
*6	79969-105	Tube 2″ × 20 11/16″ Lg. (CRS66)	1
*7	79969-43	Tube 2″ × 18 11/16″ Lg. (CRS103)	1
*8	79894	Elbow 45° (2″ Tube × 2″ Tube)	1
*9	79969-91	Tube 2″ × 5⅜″ Lg	1
*10	79896	Elbow 45° (2″ Tube × 2″ Male Pipe)	1
**11	79896	Elbow 45° (2″ Tube × 2″ Male Pipe)	1
**12	79969-6	Tube 2″ × 13¼″ Lg	1
**13	79894	Elbow 45° (2″ Tube × 2″ Tube)	1
**14	79969-5	Tube 2″ × 21⅞″ Lg. (CRS86)	1
**15	79969-10	Tube 2″ × 20″ (CRS103)	1
**16	79969-7	Tube 2″ × 21⅞″ Lg. (CRS66)	1
**17	79969-12	Tube 2″ × 26 13/16″ Lg. (CRS76)	1
**18	78956	Adapter - Male (2″ Tube × 2″ Male Pipe)	1

*R. to L. Operation.
**L. to R. Operation.