HOBART

CATALOG OF REPLACEMENT PARTS

COMBINATION ATMOSPHERIC STEAMER/CONVECTION OVEN

SCVX20E ML-46172

THIS MANUAL REPLACES AND SHOULD BE USED INSTEAD OF FORM 16295.

PRIOR ML'S COVERED IN THIS MANUAL

ML-46142

A product of HOBART CORPORATION TROY, OHIO 45374

FORM 16748 (1-88)

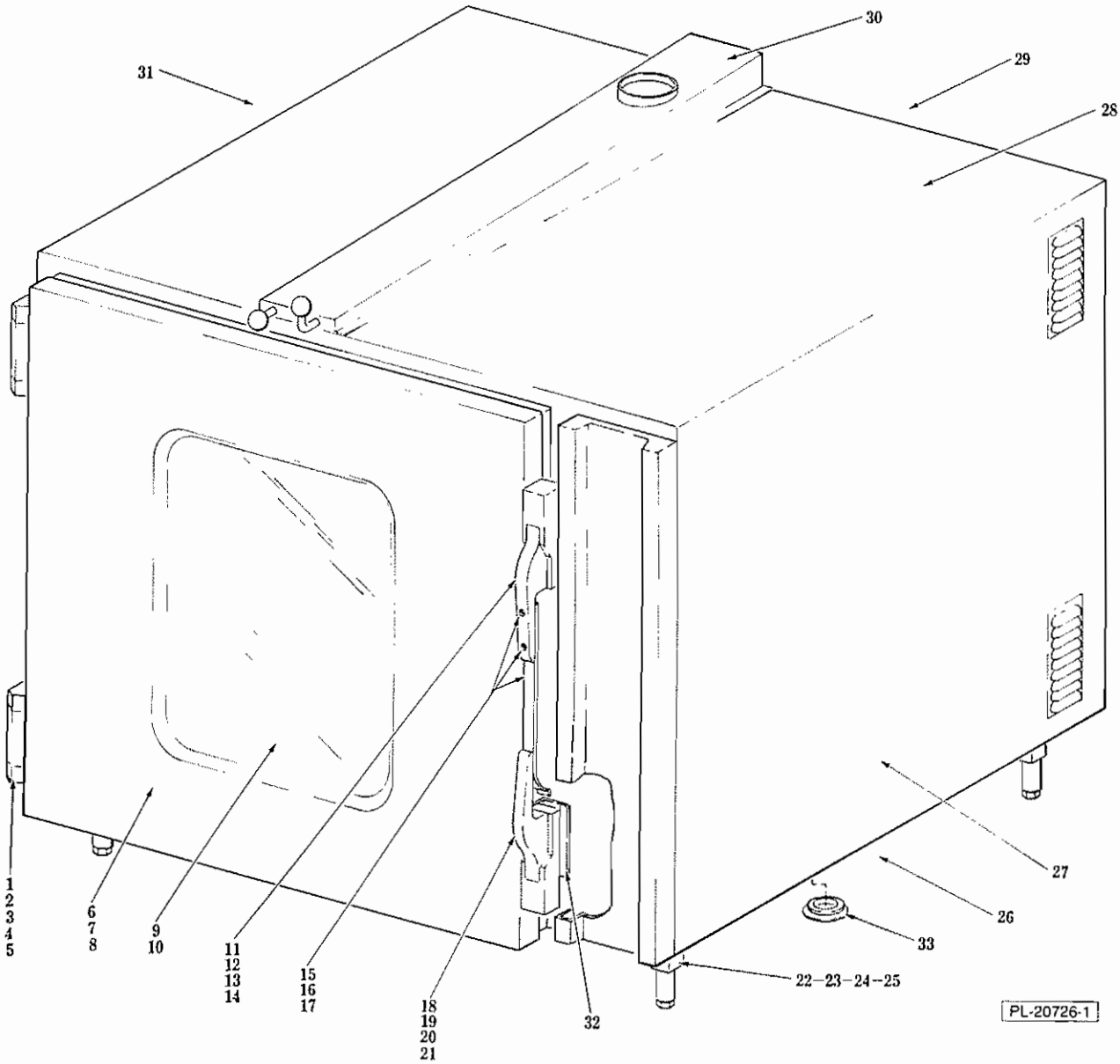

DOOR AND EXTERIOR PANELS

DOOR AND EXTERIOR PANELS

ILLUS. PL-20726-1	PART NO.	NAME OF PART[16]	AMT.
1	149921	Hinge - Door	2
2	149940-31	Shim - Hinge	2
3	SC-118-34	Mach. Screw M5 x 0.8 x 40MM Flat Hd	6
4	SC-118-30	Mach. Screw M5 x 0.8 x 35MM Flat Hd	8
5	149926-2	Fastener Assy. (M5 Square Nut)	8
6	149940-42	Oven Door Assy. (Incls. items 7 thru 10)	1
7	149940-43	Panel - Exterior Door	1
8	149940-44	Panel - Interior Door	1
9	149913-1	Glass - Oven Door	1
10	149915-3	Seal - Silicone (Door Glass)	2
11	149920-3	Handle - Drilled	1
12	SC-118-34	Mach. Screw M5 x 0.8 x 40MM Flat Hd	2
13	149940-64	Spacer - Thread	1
14	149926-2	Fastener Assy. (M5 Square Nut)	2
15	149940-45	Linkage - Door Handle	1
16	SC-118-46	Mach. Screw M4 x 0.7 x 15MM Flat Hd	1
17	SC-118-26	Mach. Screw M4 x 0.7 x 10MM Flat Hd	1
18	149920-1	Handle - Door	1
19	SC-118-34	Mach. Screw M5 x 0.8 x 40MM Flat Hd	2
20	149940-64	Spacer - Thread	1
21	149926-2	Fastener Assy. (2M Square Nut)	2
22	149940-7	Leg Assy	4
23	149919-2	Foot - Adjustable	4
24	SC-118-45	Cap Screw M8 x 1.25 x 20MM Hex Hd	16
25	WL-19-56	Lock Washer ¼ Ext. Shakeproof	16
26	149940-1	Bottom Exterior Panel Assy	1
27	149940-4	R.H. Exterior Panel Assy	1
28	149940-2	Top Exterior Panel Assy	1
29	149940-5	Rear Exterior Panel	1
30	149940-6	Chimney Panel Assy	1
31	149940-3	L.H. Exterior Panel Assy	1
32	149940-79	Corner - Door Contact	1
33	149990-35	Plug - Hole	6

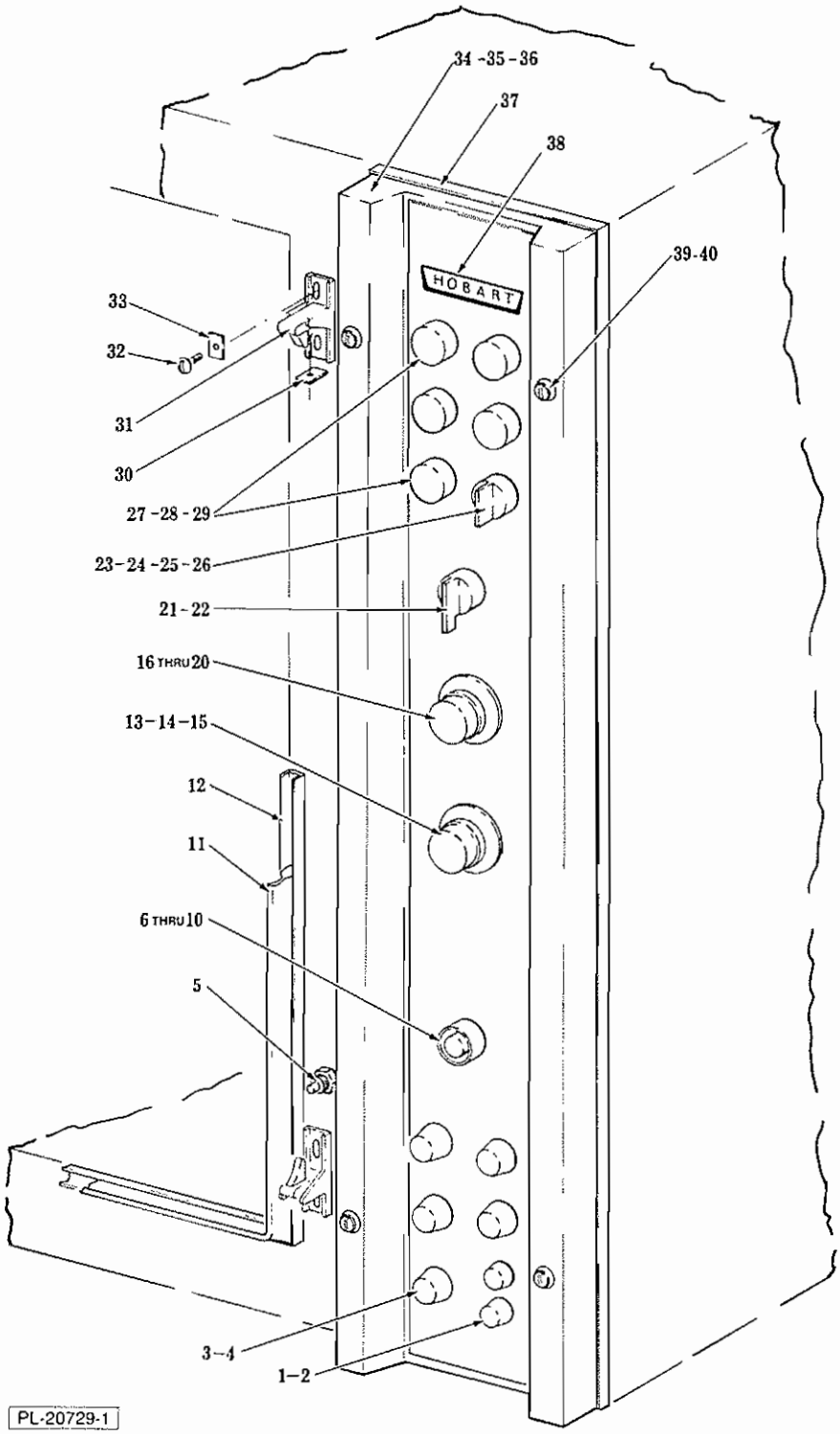

CONTROL PANEL

CONTROL PANEL

ILLUS. PL-20729-1	PART NO.	NAME OF PART[16]	AMT.
1	FE-21-19	Fuse 3.2A	2
2	FE-22-73	Holder - Fuse	2
3	FE-22-45	Fuse 5A	5
4	FE-23-55	Holder - Fuse	5
5	149997	Switch - Door Interlock	1
6	149948	Button - Motor Reset	1
7	40651-7	Contactor	1
8	SC-118-28	Mach. Screw M4 × 0.7 × 12MM Pan Hd	2
9	40652-17	Relay - Motor Overload	1
10	87714-27-1	Buzzer (24 V.)	1
11	149934-4	Seal - Door (Silicone)	1
12	149940-30	Support Door Seal	1
13	149946	Knob - Timer	1
14	149998-1	Timer	1
15	SC-118-24	Mach. Screw M3 × 0.5 × 10 MM Flat Hd	2
16	149946	Knob - Thermostat	1
*17	— — —	Thermostat (EGO)	1
**18	347961-1	Thermostat (Robert Shaw)	1
19	SC-114-83	Mach. Screw 6-32 × ¼ Pan Hd	2
20	149999-5	Sleeving (⅜ × 69 11/16) (Protects Capillary Tube)	1
21	293118	Knob - Switch	1
22	149938	Switch (Incls. item 19)	1
23	228500-2	Operator - Switch	1
24	147525-1	Block & Base - Switch Contact (Incls. 1 of item 25)	1
25	146916-1	Block - Switch Contact (N.O.)	4
26	147525-1	Block - Switch Contact (N.O.) (Mounts to Panel)	1
27	228501-4	Bulb - 24 V. Pilot Light	5
28	149922-1	Lens Cover Assy	5
29	149914	Base - Pilot Light (W/O Bulb)	5
30	149940-76	Cover - Door Latch (Oblong)	2
31	149920-2	Latch - Door Handle	2
32	SC-118-32	Mach. Screw M5 × 0.8 × 10MM Pan Hd	4
33	149940-47	Cover - Door Latch	4
34	293076	Control Panel Assy	1
35	149940-52	Cable - Control Panel Restraint	1
36	150200-1	Sleeving (½ × 12) (Used on Panel Restraint)	1
37	149915-2	Seal - Control Panel	1
38	149940-89	Panel - Control Panel Overlay	1
39	SC-118-38	Mach. Screw M4 × 0.7 × 50MM Flat Hd	4
40	WC-6-9	Washer - Countersunk	4
	293123	Kit - Thermostat (Converts EGO to Robert Shaw)	1

*Not Available, Order Service Kit 293123.
**First Serial No. 81-001-264 and Beyond use "Robert Shaw" Thermostat.

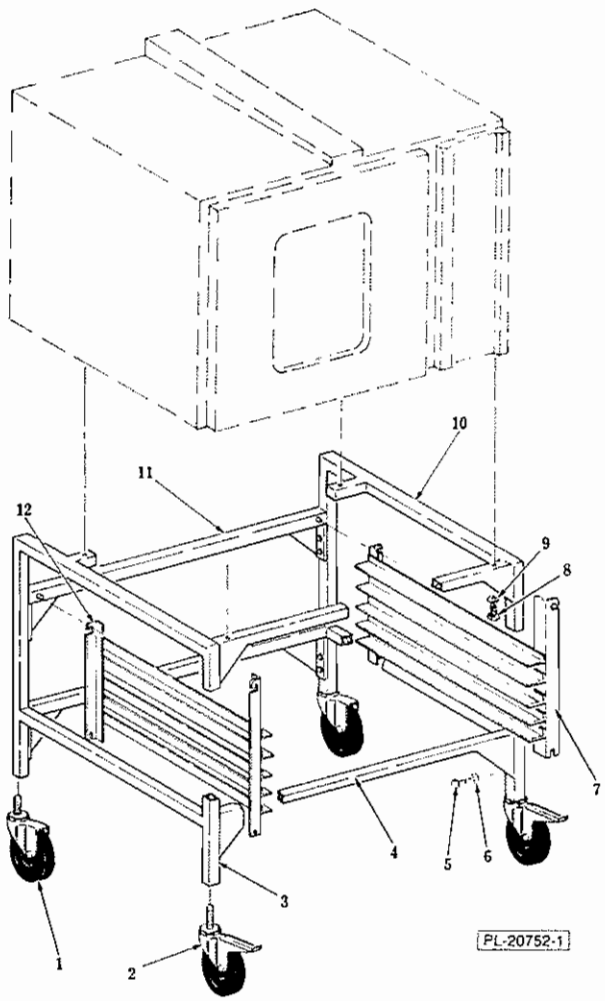

STAND WITH TENTE CASTERS AND PAN RACKS

ILLUS. PL-20752-1	PART NO.	NAME OF PART28	AMT.
1	149982	Caster - Swivel	2
2	149981	Caster - Swivel (With Double Brake)	2
3	150216-2	Leg (L.H.)	1
4	150216-4	Support - Bar Frame	3
5	SC-118-45	Cap Screw M8 x 1.25 x 20mm Hex Hd	16
6	WL-19-56	Lock Washer DE8 Ext. Shakeproof	16
7	150216-5	Rack - Pan (R.H.)	1
8	SC-118-48	Cap Screw M8 x 1.25 x 50mm Hex Hd	4
9	WL-19-56	Lock Washer DE8 Ext. Shakeproof	4
10	150216-1	Leg (R.H.)	1
11	150216-3	Bar - Oven Frame Support	1
12	150216-6	Rack - Pan (L.H.)	1
	SC-118-56	Cap Screw M12 x 1.75 x 30MM Hex Hd. (Used to Hold Caster to Leg)	4

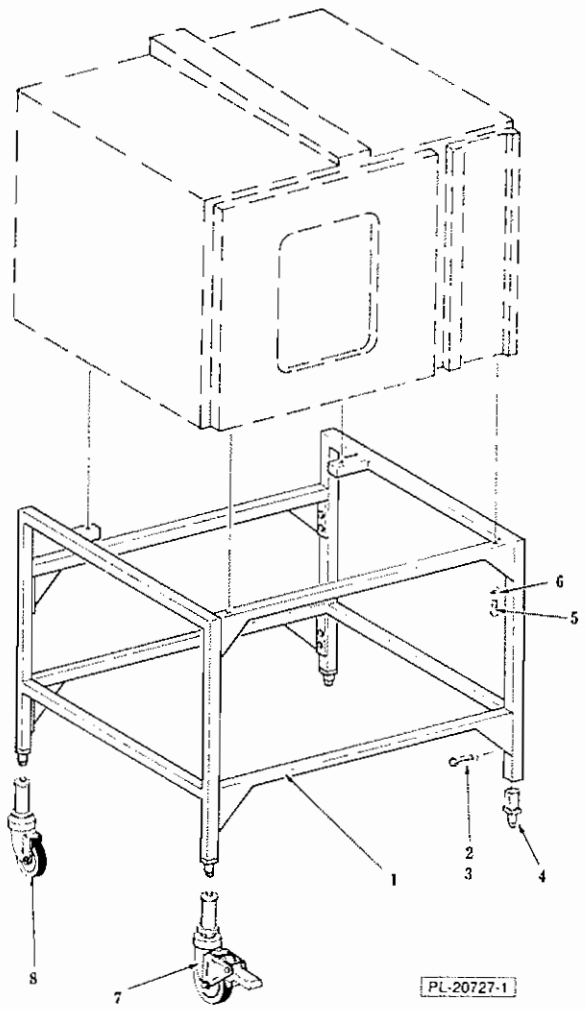

STAND WITH ADJUSTABLE FEET AND OPTIONAL COLSON CASTERS

ILLUS. PL-20727-1	PART NO.	NAME OF PART[28]	AMT.
1	149940-77	Frame - Oven Support Assy	1
2	SC-118-45	Cap Screw M8 x 1.25 x 20mm Hex Hd	16
3	WL-19-56	Lock Washer DE8 Ext. Shakeproof	16
4	149919-2	Foot - Adjustable	4
5	SC-118-48	Cap Screw M8 x 1.25 x 50mm Hex Hd	4
6	WL-19-56	Lock Washer DE8 Ext. Shakeproof	4
7	270793-1	Caster - Swivel (With Double Brake)	2
8	270793-2	Caster - Swivel	2

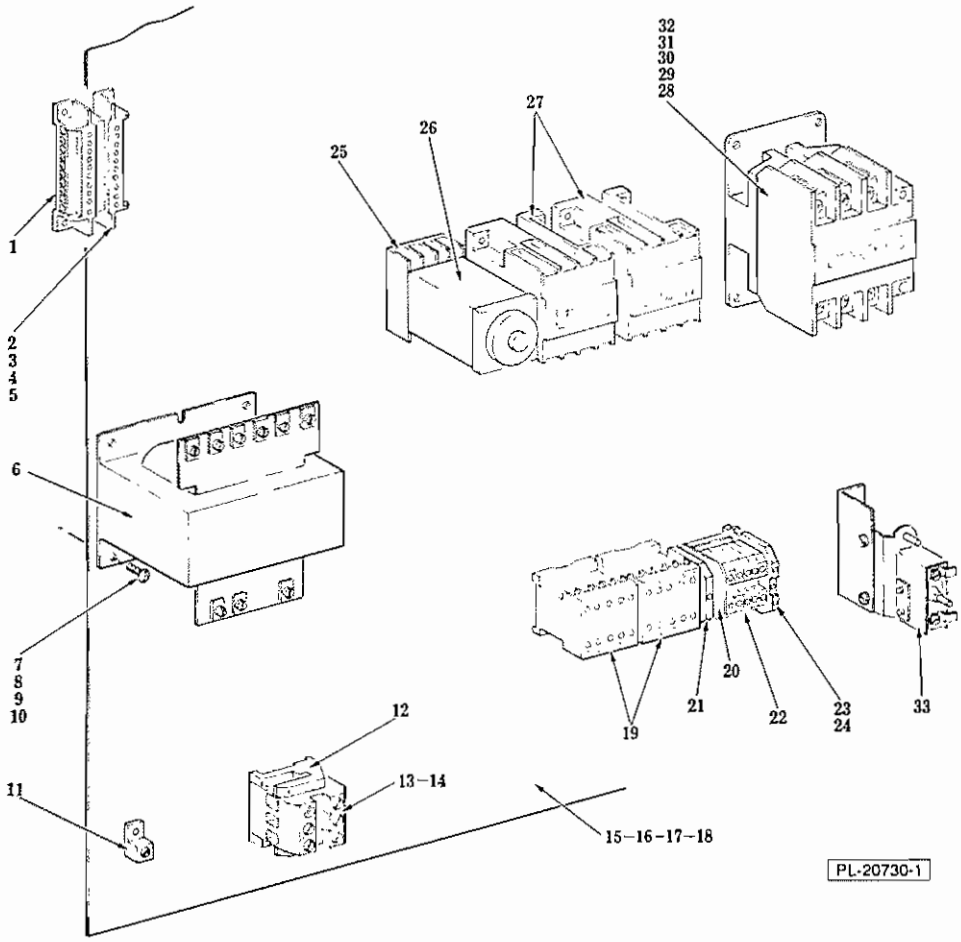

ELECTRICAL COMPONENT PANEL

ELECTRICAL COMPONENT PANEL

ILLUS. PL-20730-1	PART NO.	NAME OF PART[16]	AMT.
1	149902-1	Connector - Male	3
2	149902-2	Connector - Female	3
3	SC-200-2	Mach. Screw M4 x 0.7 x 10MM Pan Hd	6
4	WL-14-5	Lock Washer 8 Ext. Shakeproof	6
5	NS-200-3	Mach. Nut M4 x 0.7 Hex	6
6	294500-12	Transformer	1
7	SC-118-32	Mach. Screw M5 x 0.8 x 10MM Pan Hd	4
8	WS-23-44	Washer	4
9	WL-14-5	Lock Washer 8 Ext. Shakeproof	4
10	NS-200-3	Mach. Nut M4 x 0.7 Hex	4
11	118544-3	Lug - Grounding	1
12	149912	End - Terminal Block	2
13	149905	Block - Terminal	3
14	149911-1	End - Terminal Block	1
15	149940-58	Componenet Panel Assy	1
16	SC-200-2	Mach. Nut M4 x 0.7 x 10MM Pan Hd	4
17	WL-14-5	Lock Washer 8 Ext. Shakeproof	4
18	WS-23-44	Washer	4
19	149977-1	Contactor - Auxiliary	2
20	149911-3	End - Terminal Block	1
21	149912	End - Terminal Bloc	1
22	150221	Block - Terminal	2
23	149909	Block - Terminal (Grounding)	1
24	149911-7	Block - Terminal	1
25	293117	Base - Temperature Control	1
26	293061	Controller - Temperature	1
27	227014-5	Contactor	2
28	147621-12	Contactor	1
29	SC-118-32	Mach. Screw M5 x 0.8 x 10MM Pan Hd	3
30	WS-23-34	Washer	3
31	WL-19-52	Lock Washer DE5 Ext. Shakeproof	3
32	NS-47-33	Mach. Nut M5 x 0.8 Hex Thin	3
33	293053	Thermostat - Hi Temp	1
	149969	Thermocouple (Temperature Control Base to Steam Inlet Tee)	1
	539847	Cable - Tie (Hi-Temperature)	AR
	149999-4	Sleeving (⅜ x 39½) (Used on High Temp. Capillary Tube & Thermocouple 149969)	2

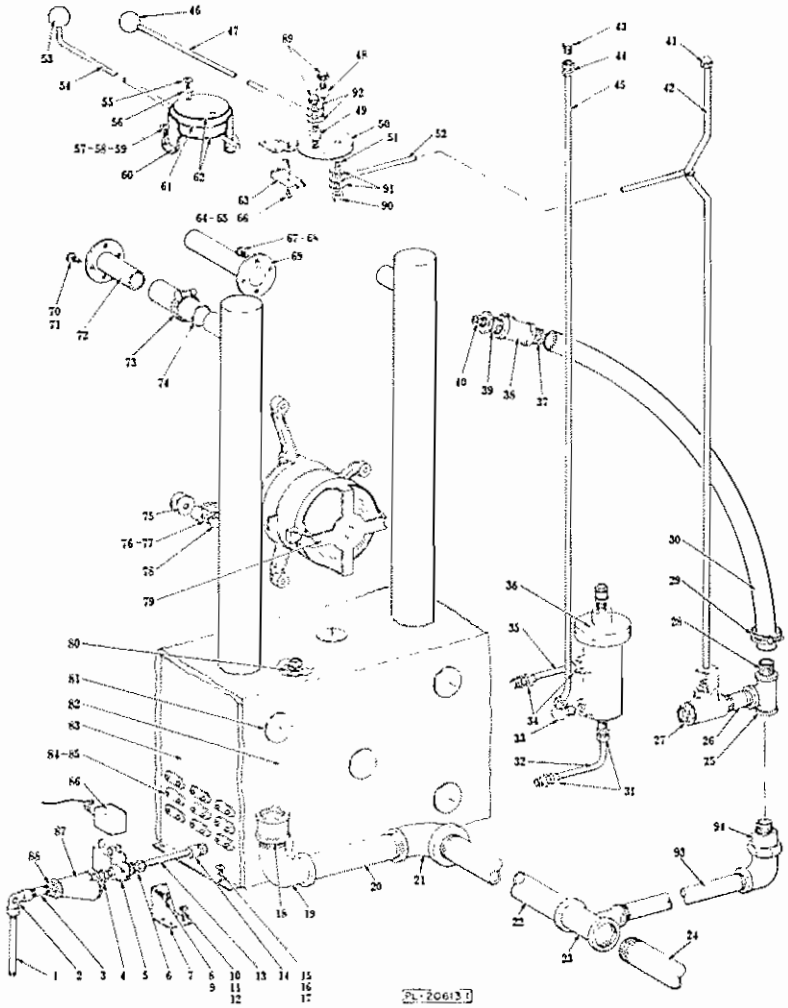

MISCELLANEOUS

ILLUS. PL-20613-1	PART NO.	NAME OF PART[15]	AMT.
1	FP-40-16	Nipple ¼ x 2½ Lg. (T.B.E.)	1
2	150226-1	Elbow ¼ x 90°	1
3	FP-40-8	Nipple ¼ x ⅞ Lg. (T.B.E.)	1
4	149973-1	Reducer - Pipe	1
5	293052-1	Solenoid Valve (24 V.) (Incls. item 86)	1
6	149963-1	Union - Male Thd	1
7	149940-17	Support - Water Solenoid	1
8	SC-118-23	Mach. Screw 8-32 x ¼ Pan Hd	2
9	WL-14-5	Lock Washer 8 Ext. Shakeproof	2
10	SC-118-32	Mach. Screw M5 x 0.8 x 10MM Pan Hd	2
11	WL-19-54	Lock Washer DE5 Int. Shakeproof	2
12	NS-47-33	Mach. Nut M5 x 0.8 Hex	2
13	149965-1	Tube - Copper	1
14	149967-2	Union - Female	1
15	SC-118-32	Mach. Screw M5 x 0.8 x 10 MM Pan Hd	4
16	WL-19-52	Lock Washer DE5 Ext. Shakeproof	4
17	NS-47-33	Mach. Nut M5 x 0.8 Hex Thin	4
18	149960-1	Coupling 1"	1
19	149959-1	Elbow 1" x 90° Street	1
20	149961-6	Nipple - 1"	1
21	149932-3	Elbow 1 x 90°	1
22	149961-2	Nipple 1"	1
23	150219-1	Tee - 1" x 1" ½" Reducing	1
24	149961-8	Nipple 1"	1
25	149957-1	Tee - ½"	1
26	149942-1	Nipple ½"	1
27	149974	Ball Valve ½	1

MISCELLANEOUS (Cont.)

ILLUS. PL-20613-1	PART NO.	NAME OF PART16	AMT.
28	149942-2	Nipple ½"	1
29	149978-1	Clamp - Flexible Tubing	2
30	149964-2	Tubing - Steam Injector Flexible	1
31	149963-2	Union (¼" M.P. x 10MM Tube)	2
32	149940-67	Tube - Water Regulator (10MM)	1
33	149976-1	Elbow 90° (¼" M.P. x 10MM Tube)	1
34	149963-2	Union (¼" M.P. x 10MM Tube)	2
35	149965-2	Tube (10MM)	1
36	149945	Regulator - Water (High Level)	1
37	149942-2	Nipple ½"	1
38	149957-1	Tee - ½"	1
39	149947-1	Bushing - ½" to ⅛" Outside Hex Reducing	1
40	149975-1	Fitting - Thermostat Capillary Tube	1
41	NS-47-34	Acorn Nut M6 x 1.0 Hex	1
42	149940-10	Linkage - Boiler Drain Vertical	1
43	149966-1	Plug - ¼" Pipe	1
44	149963-2	Union ¼"	1
45	149940-66	Tube - Vinegar Cleanout (10MM)	1
46	149951	Knob	1
47	149940-9	Handle - Boiler Drain Control	1
48	149940-13	Pin - Boiler Drain Cam	1
49	149940-13	Pin - Boiler Drain Cam	1
50	149940-12	Cam - Boiler Drain Interlock	1
51	149940-13	Pin - Boiler Drain Cam	1
52	149940-11	Linkage - Boiler Drain Horizontal	1
53	149951	Knob	1
54	149940-25	Lever - Chimney Control	1
55	SC-118-28	Mach. Screw M4 x 0.7 x 12MM Pan Hd	2
56	WL-14-5	Lock Washer 8 Ext. Shakeproof	2
57	SC-118-28	Mach. Screw M4 x 0.7 x 12MM Pan Hd	4
58	WL-14-5	Lock Washer 8 Ext. Shakeproof	4
59	WS-23-44	Washer	4
60	149940-22	Chimney Assy	1
61	149940-46	Seal - Chimney Damper	1
62	149940-23	Damper - Chimney	2
63	149943	Switch - Micro (Interlock)	1
64	SC-200-2	Mach. Screw M4 x 0.7 x 10MM Pan Hd	2
65	WL-14-5	Lock Washer 8 Ext. Shakeproof	2
66	NS-200-3	Mach. Nut M4 x 0.7 Hex	2
67	SC-118-28	Mach. Screw M4 x 0.7 x 12MM Pan Hd	4
68	WS-23-44	Washer	4
69	149940-21	Tube - Steam Relief	1
70	SC-118-28	Mach. Screw M4 x 0.7 x 12MM Pan Hd	8
71	WS-23-44	Washer	8
72	149940-20	Injector - Steam	2
73	149978-1	Clamp - Hose	4
74	149964-1	Tubing - Steam Injector Flexible	2
75	149940-24	Washer - Motor Support	8
76	WL-19-55	Lock Washer - DE6 Ext. Shakeproof	4
77	WS-30-19	Washer	4
78	SC-118-44	Cap Screw M6 x 1.0 x 40MM Hex	4
79	149931-1	Motor - Fan (208/240)	1
80	149933	Fitting - Bulkhead (Capillary Tube)	1
81	149940-68	Clip - Boiler Insulation	12
82	149940-55	Insulation - Sheet (Boiler)	1
83	149940-32	Boiler Booster Assy	1
84	149956-1	Heater Element (2000 W., 208 V.)	9
85	149956-2	Heater Element (2000 W., 240 V.)	9
86	293105-1	Coil - Solenoid Valve (24 V.)	1
87	149968	Line Strainer	1
88	FP-27-42	Bushing ⅜ - ¼ Reducing	1
89	NS-47-34	Acorn Nut M6 x 1.0 Hex	2
90	NS-47-34	Acorn Nut M6 x 1.0 Hex	1
91	WS-30-19	Washer	2
92	WS-30-19	Washer	2
93	149961-7	Nipple ½"	1
94	149962-2	Elbow - Street Union ½"	1
	149940-63	Label - Motor Rotation	1
	149926-1	Fastener Assy. (M4 Square Nut & Retainer)	AR
	149926-2	Fastener Assy. (M5 Square Nut & Retainer)	AR
	149926-3	Fastener Assy. (M6 Square Nut & Retainer)	AR
	149984	Sealer - Silicone (CAF 538 THIX) (1KG Tube)	AR
	149999-4	Sleeving (⅜ x 39½) (High Level Water Regulator Cord)	1

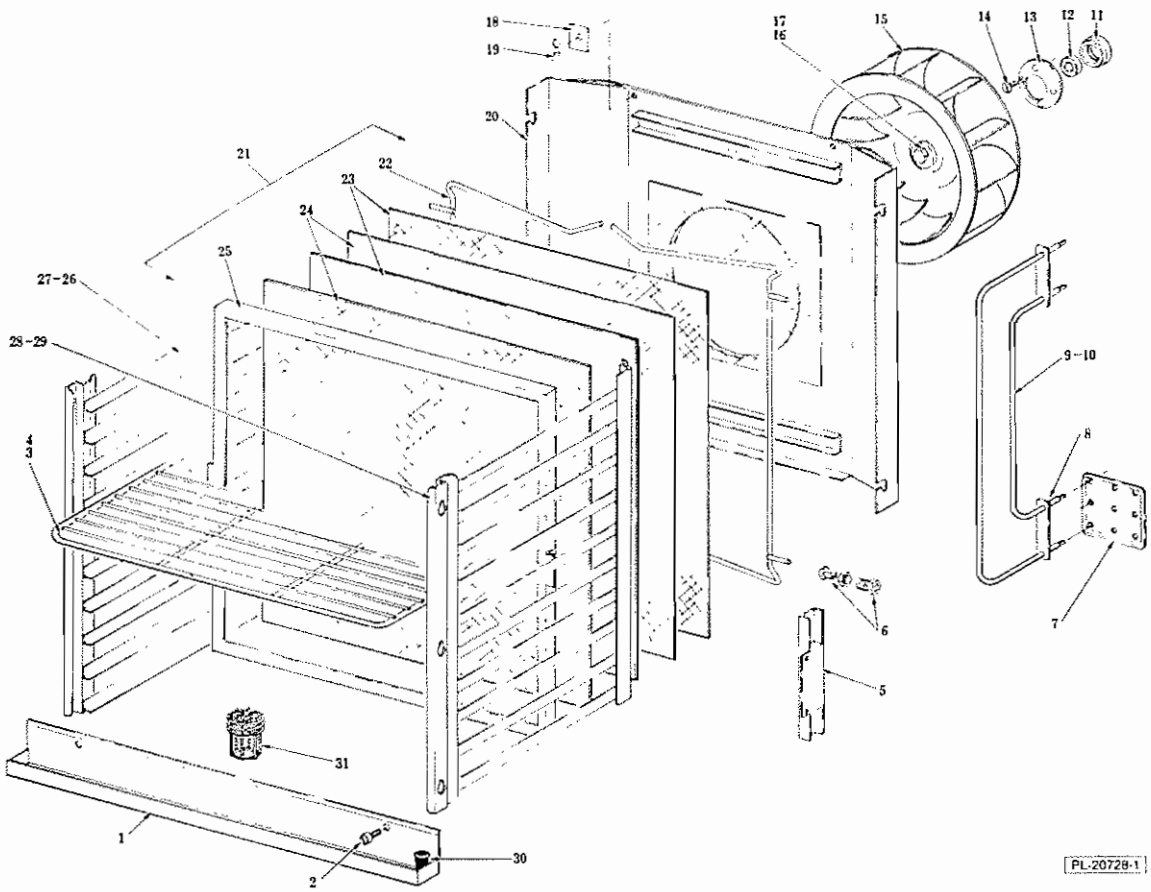

HEATERS AND BLOWER

ILLUS. PL-20728-1	PART NO.	NAME OF PART16	AMT.
1	149940-86	Pan - Condensate Drip	1
2	149940-87	Screws 5M (Drip Pan Support)	2
3	293114	Grill (Chromed Steel) (Carton of 5)	1
4	270731	Grill (SST) (Carton of 5)	1
5	149940-88	Support - Capillary Bulb	1
6	149933	Fitting - Bulkhead (Capillary Tube)	1
7	149940-29	Hood - Heating Element	4
8	149940-33	Seal - Electric Heater	12
9	150202-1	Electric Heater (2.6 KW, 208 V.)	6
10	150202-2	Electric Heater (2.6 KW, 240 V.)	6
11	149940-26	Ring - Motor Seal	1
12	149980	Seal - Motor	1
13	149940-27	Flange - Motor Seal Ring	1
14	SC-118-38	Mach. Screw M4 × 0.7 × 50MM Flat Hd	4
15	149940-35	Blower Wheel	1
16	SC-118-43	Cap Screw M6 × 1.0 × 20MM Hex Hd	1
17	149940-24	Washer - Fan	1
18	149940-34	Plate - Washer	2
19	NS-47-46	Wing Nut M5	2
20	149940-38	Exhaust Assy	1
21	149940-39	Filter Assy. (Incls. items 22 thru 25)	1
22	149940-41	Clip - Filter	2
23	149940-73	Filter - Metal (16MM × 10MM × 10MM Thk.)	2
24	149940-72	Filter - Metal (10MM × 10MM × 06 MM Thk.)	2
25	149940-40	Frame - Filter	1
26	149940-78	Rack - Oven (L.H. Side) (10 Shelves)	1
27	149940-97	Rack - Oven (L.H. Side) (7 Shelves)	1
28	149940-56	Rack - Oven (R.H. Side) (10 Shelves)	1
29	149940-94	Rack - Oven (R.H. Side) (7 Shelves)	1
30	150204	Plug - Versilic	1
31	149940-80	Screen - Drain	1