GRAM

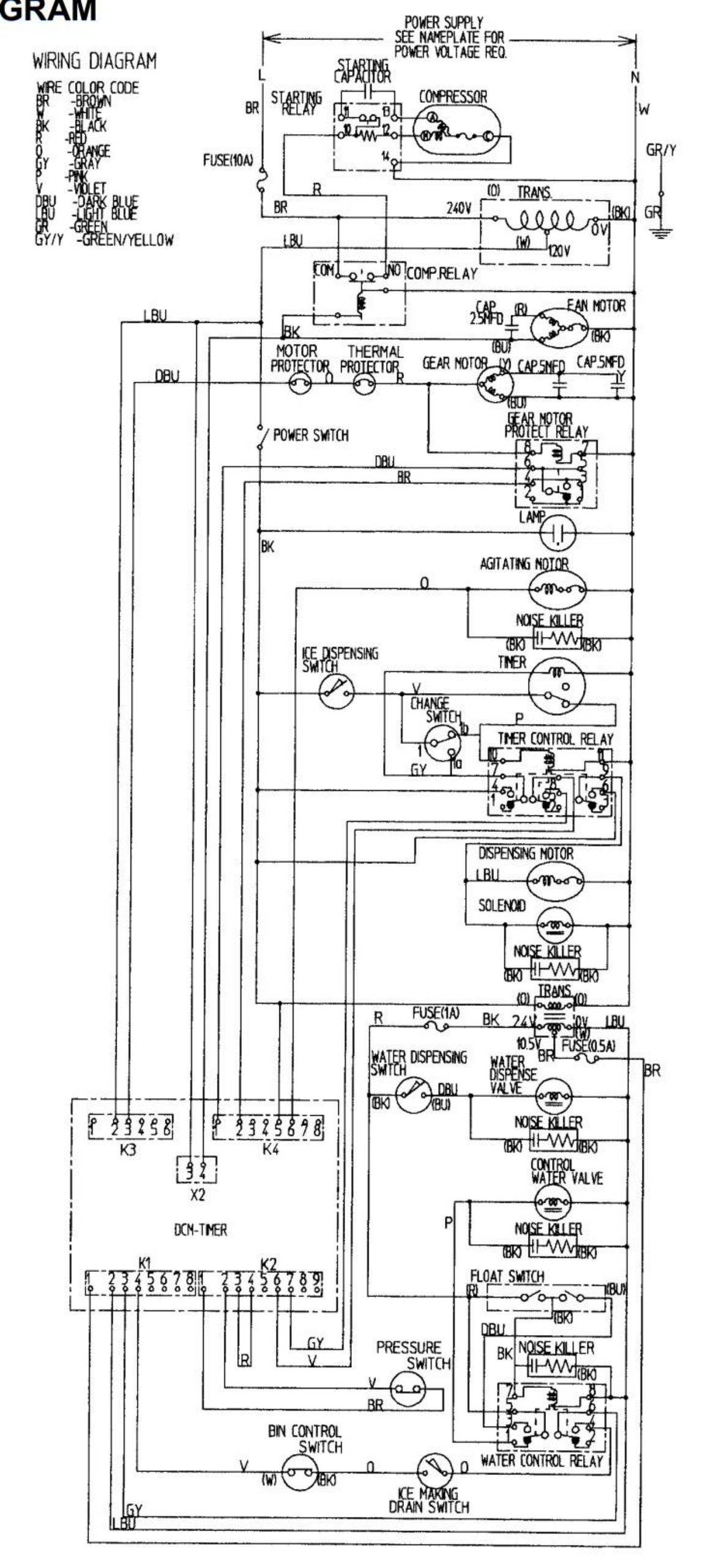
WIRING DIAGRAM
WIRE COLOR CODE
BR -BROWN
W -WHITE
BK -BLACK
R -RED
O -ORANGE
GY -GRAY
P -PINK
V -VIOLET
DBU -DARK BLUE
LBU -LIGHT BLUE
GR -GREEN
GY/Y -GREEN/YELLOW
POWER SUPPLY
SEE NAMEPLATE FOR
POWER VOLTAGE REQ.
L
N
STARTING CAPACITOR
STARTING RELAY
COMPRESSOR
FUSE(10A)
TRANS.
240V
120V
0V
COMP.RELAY
COM
NO
CAP 2.5MFD
FAN MOTOR
MOTOR PROTECTOR
THERMAL PROTECTOR
GEAR MOTOR
CAP.5MFD
GEAR MOTOR PROTECT RELAY
POWER SWITCH
LAMP
AGITATING MOTOR
NOISE KILLER
ICE DISPENSING SWITCH
TIMER
CHANGE SWITCH
TIMER CONTROL RELAY
DISPENSING MOTOR
SOLENOID
FUSE(1A)
24V
10.5V
FUSE(0.5A)
WATER DISPENSING SWITCH
WATER DISPENSE VALVE
CONTROL WATER VALVE
K3
K4
X2
DCM-TIMER
K1
K2
FLOAT SWITCH
PRESSURE SWITCH
BIN CONTROL SWITCH
ICE MAKING DRAIN SWITCH
WATER CONTROL RELAY