ISSUED: MAR. 25, 1994
REVISED: AUG. 8, 1994

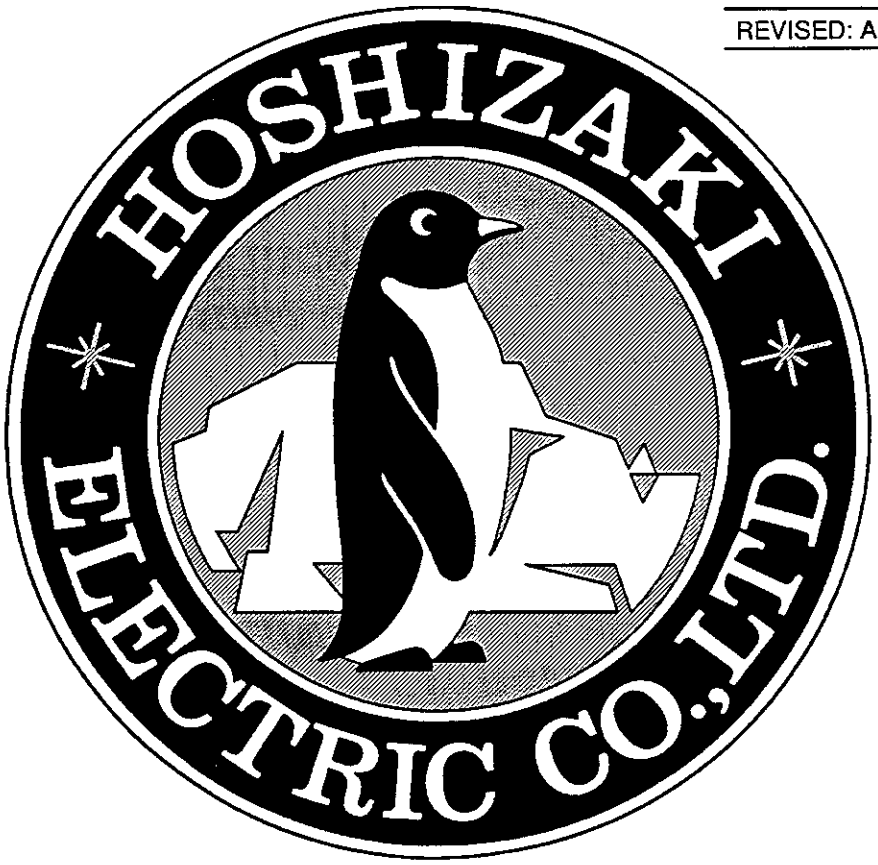

HOSHIZAKI
CUBELET ICE DISPENSER

MODEL DCM-450BAE
DCM-450BWE
DCM-700BAE
DCM-700BWE

SERVICE MANUAL

FOREWORD

This Service Manual contains the specifications and information in regard to transporting, unpacking, installing, operating and servicing the machine. You are encouraged to read it thoroughly in order to obtain maximum performance. You will find details on the construction, installation and maintenance.

If you encounter any problem not covered in this Service Manual, feel free to contact Hoshizaki America, Inc. We will be happy to provide whatever assistance is necessary.

Keep this Service Manual handy, and read it again when questions arise.

HOSHIZAKI AMERICA, INC.

618 HIGHWAY 74 SOUTH, PEACHTREE CITY,
GEORGIA 30269 U.S.A.
PHONE: 404-487-2331

HOSHIZAKI ELECTRIC CO., LTD.

TOYOAKE, AICHI, JAPAN
PHONE: 0562-97-2111
TELEX-NO: 04486-514 HOSHI J

DCM9403

CONTENTS

I. SPECIFICATIONS

1. SPECIFICATIONS

II. GENERAL INFORMATION

1. CONSTRUCTION
2. CONTROL BOX LAYOUT
3. CABINET STAND

III. TECHNICAL INFORMATION

1. WATER CIRCUIT AND REFRIGERANT CIRCUIT
2. WIRING DIAGRAM
3. SEQUENCE OF ELECTRICAL CIRCUIT
4. TIMING CHART
5. TIMER BOARD
6. PERFORMANCE DATA

IV. SERVICE INFORMATION

ADJUSTMENT OF COMPONENTS
SERVICE DIAGNOSIS
REMOVAL AND REPLACEMENT OF COMPONENTS

V. MAINTENANCE AND CLEANING INSTRUCTIONS

1. PREPARING THE ICE DISPENSER FOR LONG STORAGE
2. CLEANING INSTRUCTIONS
3. MAINTENANCE

HOSHIZAKI

CUBELET ICE DISPENSER

I.

SPECIFICATIONS

CONTENTS

PAGE

1. SPECIFICATIONS I-1
DCM-450BAE I-1
DCM-450BWE I-2
DCM-700BAE I-3
DCM-700BWE I-4

1. SPECIFICATIONS

DCM-450BAE

AC SUPPLY VOLTAGE	115/60/1
COMPRESSOR	120 V 8.3 RLA 72 LRA
GEAR MOTOR	120 V 1.6 FLA 1/8 HP
FAN MOTOR	120 V 0.6 FLA 30 W
AGITATING MOTOR	120 V 0.9 FLA 55 W
DISPENSING MOTOR	120 V 0.9 FLA 55 W
OTHERS	120 V 0.2 A
MAXIMUM FUSE SIZE	20 AMPS
MAX. HACR BREAKER (USA ONLY)	20 AMPS
MAX. CIRC BREAKER (CANADA ONLY)	20 AMPS

APPROXIMATE ICE PRODUCTION PER 24 HR.
lbs./day (kg/day)
Reference without *marks

Ambient Temp. (° F)	Water Temp. (° F) 50	70	90
70	* 494(224)	421(191)	392(178)
80	463(210)	401(182)	370(168)
90	425(193)	* 377(171)	342(155)
100	359(163)	315(143)	293(133)

SHAPE OF ICE	Cubelet (Compressed Flake Ice)
ICE QUALITY	Approx. 90 %. Ice (90/70° F, Conductivity 200 μs/cm)
APPROXIMATE STORAGE CAPACITY	40 lbs. (Based on calculation)
ELECTRIC & WATER CONSUMPTION	90° F/ 70° F, 70° F/ 50° F,
ELECTRIC W (kWH/100 lbs.)	1000 (6.4) 1100 (5.3)
POTABLE WATER gal./24HR (gal./100 lbs.)	45(12.0) 59(12.0)
EXTERIOR DIMENSIONS (WxDxH)	26" x 22-1/2" x 40" (661 x 571 x 1016 mm)
EXTERIOR FINISH	Stainless Steel, Galvanized Steel(Rear)
WEIGHT	Net 251 lbs. (114 kg), Shipping 276 lbs. (125 kg)
CONNECTIONS - ELECTRIC	Permanent Connection
- WATER SUPPLY	Inlet 1/2" FPT
- DRAIN	Outlet 3/4" MPT x2
ICE MAKING SYSTEM	Auger type
HARVESTING SYSTEM	Direct driven Auger (100 W Gear Motor)
ICE MAKING WATER CONTROL	Float Switch
COOLING WATER CONTROL	N/A
BIN CONTROL SYSTEM	Mechanical Bin Control (Proximity Sw.)
COMPRESSOR	Hermetic 3/4HP, Model RSF5-0075-CAA
CONDENSER	Air-cooled, Fin and tube type
EVAPORATOR	Copper Tube on Cylinder
REFRIGERANT CONTROL	Thermostatic Expansion Valve
REFRIGERANT CHARGE	R22, 1 lb 1.4 oz. (493 g)
DESIGN PRESSURE	High 400 PSIG, Low 230 PSIG
P.C.BOARD CIRCUIT PROTECTION	High Voltage Cut-out Relay
COMPRESSOR PROTECTION	Auto-reset Overload Protector
GEAR MOTOR PROTECTION	Auto-reset Thermal Protector Manual-reset Circuit Beaker
REFRIGERANT CIRCUIT PROTECTION	Auto-reset High Pressure Control Switch
LOW WATER PROTECTION	Float Switch and Timer
ACCESSORIES - SUPPLIED	Spare Fuse
- REQUIRED	Legs
OPERATING CONDITIONS	VOLTAGE RANGE 104 - 127 V AMBIENT TEMP. 45 - 100° F WATER SUPPLY TEMP. 45 - 90° F WATER SUPPLY PRESS. 10 - 113 PSIG

* We reserve the right to make changes in specifications and design without prior notice.

DCM-450BWE

AC SUPPLY VOLTAGE	115/60/1
COMPRESSOR	120 V 8.3 RLA 72 LRA
GEAR MOTOR	120 V 1.6 FLA 1/8 HP
FAN MOTOR	120 V 0.5 FLA 8 W
AGITATING MOTOR	120 V 0.9 FLA 55 W
DISPENSING MOTOR	120 V 0.9 FLA 55 W
OTHERS	120 V 0.2 A
MAXIMUM FUSE SIZE	20 AMPS
MAX. HACR BREAKER (USA ONLY)	20 AMPS
MAX. CIRC BREAKER (CANADA ONLY)	20 AMPS

APPROXIMATE ICE PRODUCTION PER 24 HR.
lbs./day (kg/day)
Reference without *marks

Ambient Temp. (° F)	Water Temp. (° F) 50	70	90
70	* 547(248)	516(234)	470(213)
80	531(241)	505(229)	456(207)
90	522(237)	* 481(218)	437(198)
100	516(234)	478(217)	430(195)

SHAPE OF ICE	Cubelet (Compressed Flake Ice)
ICE QUALITY	Approx. 90 %, Ice (90/70° F, Conductivity 200 μs/cm)
APPROXIMATE STORAGE CAPACITY	40 lbs. (Based on calculation)

ELECTRIC & WATER CONSUMPTION	90° F/70° F,	70° F/50° F,
ELECTRIC W (kWH/100 lbs.)	1026 (5.1)	1040 (4.6)
POTABLE WATER	58 (12.0)	66 (12.0)
WATER - COOLED CONDENSER gal./24HR (gal./100 lbs.)	660 (137)	449(82)

EXTERIOR DIMENSIONS (WxDxH)	26" x 22-1/2" x 40" (661 x 571 x 1016 mm)
EXTERIOR FINISH	Stainless Steel, Galvanized Steel (Rear)
WEIGHT	Net 245 lbs. (111 kg), Shipping 269 lbs. (122 kg)
CONNECTIONS - ELECTRIC	Permanent Connection
- WATER SUPPLY	Inlet 1/2" FPT Condenser Inlet 1/2" FPT
- DRAIN	Outlet 3/4" MPTx2 Condenser Outlet 1/2" FPT
ICE MAKING SYSTEM	Auger type
HARVESTING SYSTEM	Direct driven Auger (100 W Gear Motor)
ICE MAKING WATER CONTROL	Float Switch
COOLING WATER CONTROL	Water Regulative Valve
BIN CONTROL SYSTEM	Mechanical Bin Control (Proximity Sw.)
COMPRESSOR	Hermetic 3/4HP, Model RSF5-0075-CAA
CONDENSER	Water-cooled, Double tube type
EVAPORATOR	Copper Tube on Cylinder
REFRIGERANT CONTROL	Thermostatic Expansion Valve
REFRIGERANT CHARGE	R22, 11.6 oz. (330 g)
DESIGN PRESSURE	High 400 PSIG, Low 230 PSIG
P.C.BOARD CIRCUIT PROTECTION	High Voltage Cut-out Relay
COMPRESSOR PROTECTION	Auto-reset Overload Protector
GEAR MOTOR PROTECTION	Auto-reset Thermal Protector Manual-reset Circuit Beaker
REFRIGERANT CIRCUIT PROTECTION	Auto-reset High Pressure Control Switch
LOW WATER PROTECTION	Float Switch and Timer
ACCESSORIES - SUPPLIED	Spare Fuse
- REQUIRED	Legs
OPERATING CONDITIONS	VOLTAGE RANGE 104 - 127 V AMBIENT TEMP. 45 - 100° F WATER SUPPLY TEMP. 45 - 90° F WATER SUPPLY PRESS. 10 - 113 PSIG

* We reserve the right to make changes in specifications and design without prior notice.

AC SUPPLY VOLTAGE	115/60/1
COMPRESSOR	120 V 10 RLA 75 LRA
GEAR MOTOR	120 V 3 FLA 1/4 HP
FAN MOTOR	120 V 1 FLA 30 W
AGITATING MOTOR	120 V 1.8 FLA (TOTAL) 110 W
DISPENSING MOTOR	120 V 0.9 FLA 55 W
OTHERS	120 V 0.6 A
MAXIMUM FUSE SIZE	20 AMPS
HACR TYPE BREAKER SIZE	20 AMPS
MINIMUM CIRCUIT AMPACITY	20 AMPS

APPROXIMATE ICE PRODUCTION PER 24 HR.
lbs./day (kg/day)
Reference without *marks

Ambient Temp. (° F)	Water Temp. (° F) 50	70	90
70	* 664(301)	631(286)	597(271)
80	608(276)	582(264)	547(248)
90	553(251)	* 547(248)	503(228)
100	498(226)	478(217)	456(207)

SHAPE OF ICE	Cubelet (Compressed Flake Ice)
ICE QUALITY	Approx. 90 %, Ice (90/70° F, Conductivity 200 μs/cm)
APPROXIMATE STORAGE CAPACITY	95 lbs. (Based on calculation)
ELECTRIC & WATER CONSUMPTION	90° F/ 70° F, 70° F/ 50° F,
ELECTRIC W (kWH/100 lbs.)	1390 (6.1) 1320 (4.8)
POTABLE WATER gal./24HR (gal./100 lbs.)	66 (12.1) 80 (12.0)
EXTERIOR DIMENSIONS (WxDxH)	34-1/16" x 28-3/8" x 52" (865 x 720 x 1321 mm)
EXTERIOR FINISH	Stainless Steel, Galvanized Steel(Rear)
WEIGHT	Net 370 lbs. (168 kg), Shipping 397 lbs. (180 kg)
CONNECTIONS - ELECTRIC	Permanent Connection
- WATER SUPPLY	Inlet 1/2" FPT
- DRAIN	Outlet 3/4" MPT x2
ICE MAKING SYSTEM	Auger type
HARVESTING SYSTEM	Direct driven Auger (200 W Gear Motor)
ICE MAKING WATER CONTROL	Float Switch
COOLING WATER CONTROL	N/A
BIN CONTROL SYSTEM	Mechanical Bin Control (Proximity Sw.)
COMPRESSOR	Hermetic 3/4 HP, Model RSN6-0075-CAA
CONDENSER	Air-cooled, Fin and tube type
EVAPORATOR	Copper Tube on Cylinder
REFRIGERANT CONTROL	Thermostatic Expansion Valve
REFRIGERANT CHARGE	R22, 1 lb. 9.0 oz. (710 g)
DESIGN PRESSURE	High 400 PSIG, Low 230 PSIG
P.C.BOARD CIRCUIT PROTECTION	High Voltage Cut-out Relay
COMPRESSOR PROTECTION	Auto-reset Overload Protector
GEAR MOTOR PROTECTION	Auto-reset Thermal Protector Manual-reset Circuit Breaker
REFRIGERANT CIRCUIT PROTECTION	Auto-reset High Pressure Control Switch
LOW WATER PROTECTION	Float Switch and Timer
ACCESSORIES - SUPPLIED	Spare Fuse
- REQUIRED	Legs
OPERATING CONDITIONS	VOLTAGE RANGE 104 - 127 V AMBIENT TEMP. 45 - 100° F WATER SUPPLY TEMP. 45 - 90° F WATER SUPPLY PRESS. 10 - 113 PSIG

* We reserve the right to make changes in specifications and design without prior notice.

AC SUPPLY VOLTAGE	115/60/1
COMPRESSOR	120 V 10 RLA 75 LRA
GEAR MOTOR	120 V 3 FLA 1/4 HP
FAN MOTOR	120 V 0.5 FLA 8 W
AGITATING MOTOR	120 V 1.8 FLA (TOTAL) 110 W
DISPENSING MOTOR	120 V 0.9 FLA 55 W
OTHERS	120 V 0.6 A
MAXIMUM FUSE SIZE	20 AMPS
HACR TYPE BREAKER SIZE	20 AMPS
MINIMUM CIRCUIT AMPACITY	20 AMPS

APPROXIMATE ICE PRODUCTION PER 24 HR. lbs./day (kg/day) Reference without *marks

Ambient Temp. (° F)	Water Temp. (° F) 50	70	90
70	* 631(286)	584(265)	534(242)
80	617(280)	567(257)	514(233)
90	602(273)	* 547(248)	496(225)
100	591(268)	534(242)	478(217)

SHAPE OF ICE	Cubelet (Compressed Flake Ice)
ICE QUALITY	Approx. 90 %, Ice (90/70° F, Conductivity 200 μs/cm)
APPROXIMATE STORAGE CAPACITY	95 lbs. (Based on calculation)

ELECTRIC & WATER CONSUMPTION	90° F/ 70° F,	70° F/ 50° F,
ELECTRIC W (kWH/100 lbs.)	1430 (6.3)	1340 (5.1)
POTABLE WATER	66 (12.1)	76 (12.0)
WATER - COOLED CONDENSER gal./24HR (gal./100 lbs.)	467 (85.3)	340 (53.9)

EXTERIOR DIMENSIONS (WxDxH)	34-1/16" x 28-3/8" x 52" (865 x 720 x 1321 mm)
EXTERIOR FINISH	Stainless Steel, Galvanized Steel(Rear)
WEIGHT	Net 366 lbs. (166 kg), Shipping 393 lbs. (178 kg)
CONNECTIONS - ELECTRIC	Permanent Connection
- WATER SUPPLY	Inlet 1/2" FPT Condenser Inlet 1/2" FPT
- DRAIN	Outlet 3/4" MPT x2 Condenser Outlet 1/2" FPT
ICE MAKING SYSTEM	Auger type
HARVESTING SYSTEM	Direct driven Auger (200 W Gear Motor)
ICE MAKING WATER CONTROL	Float Switch
COOLING WATER CONTROL	Water Regulating Valve
BIN CONTROL SYSTEM	Mechanical Bin Control (Proximity Sw.)
COMPRESSOR	Hermetic 3/4 HP, Model RSN6-0075-CAA
CONDENSER	Water-cooled, Double tube type
EVAPORATOR	Copper Tube on Cylinder
REFRIGERANT CONTROL	Thermostatic Expansion Valve
REFRIGERANT CHARGE	R22, 13.4 oz. (380 g)
DESIGN PRESSURE	High 400 PSIG, Low 230 PSIG
P.C.BOARD CIRCUIT PROTECTION	High Voltage Cut-out Relay
COMPRESSOR PROTECTION	Auto-reset Overload Protector
GEAR MOTOR PROTECTION	Auto-reset Thermal Protector Manual-reset Circuit Breaker
REFRIGERANT CIRCUIT PROTECTION	Auto-reset High Pressure Control Switch
LOW WATER PROTECTION	Float Switch and Timer
ACCESSORIES - SUPPLIED	Spare Fuse
- REQUIRED	Legs
OPERATING CONDITIONS	VOLTAGE RANGE 104 - 127 V AMBIENT TEMP. 45 - 100° F WATER SUPPLY TEMP. 45 - 90° F WATER SUPPLY PRESS. 10 - 113 PSIG

* We reserve the right to make changes in specifications and design without prior notice.

HOSHIZAKI

CUBELET ICE DISPENSER

II.

GENERAL INFORMATION

CONTENTS

PAGE

1. CONSTRUCTION II-1
DCM-450BAE, DCM-700BAE II-1
DCM-450BWE, DCM-700BWE II-2

2. CONTROL BOX LAYOUT II-3
DCM-450BAE, DCM-450BWE II-3
DCM-700BAE, DCM-700BWE II-4

3. CABINET STAND II-5

1. CONSTRUCTION

DCM-450BAE, DCM-700BAE

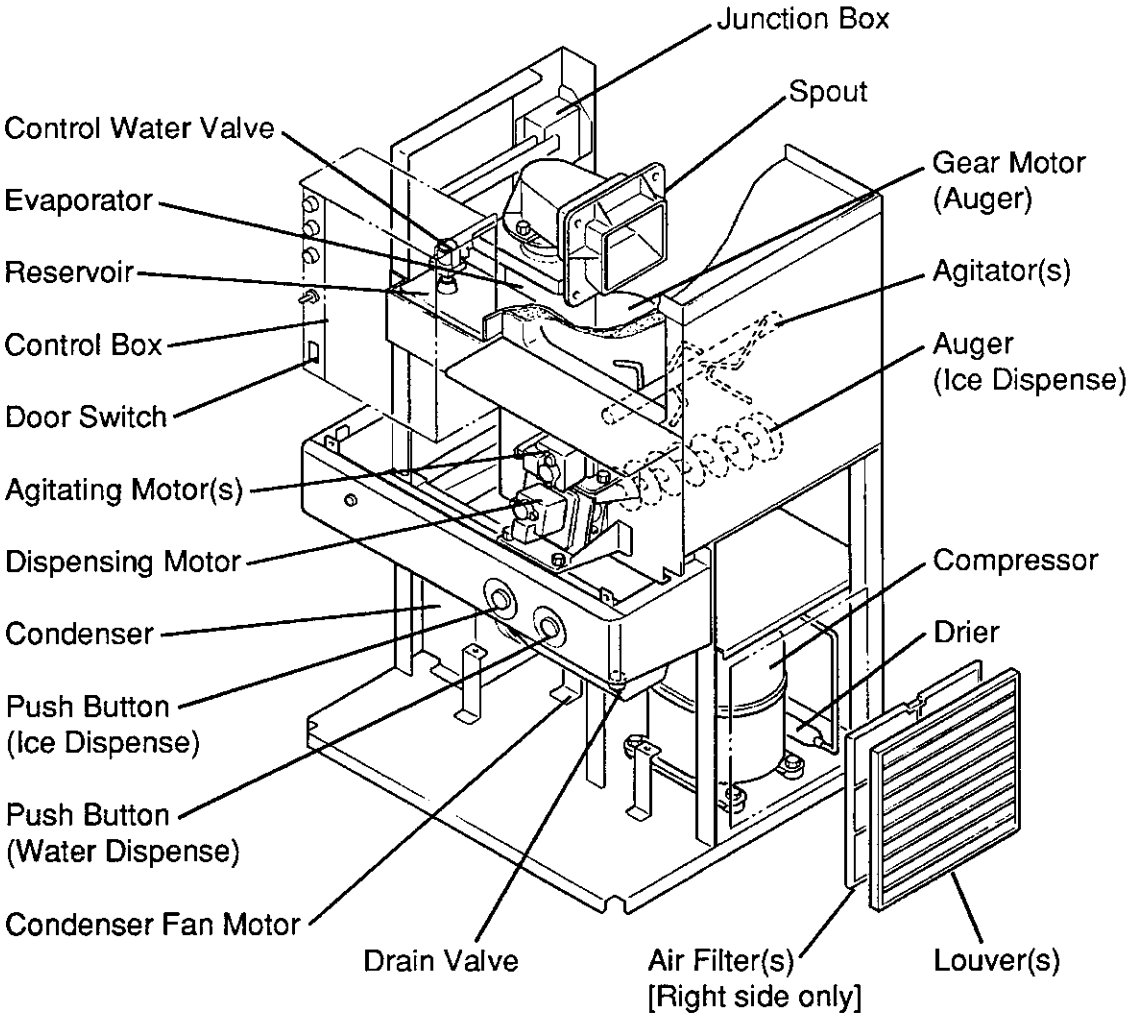

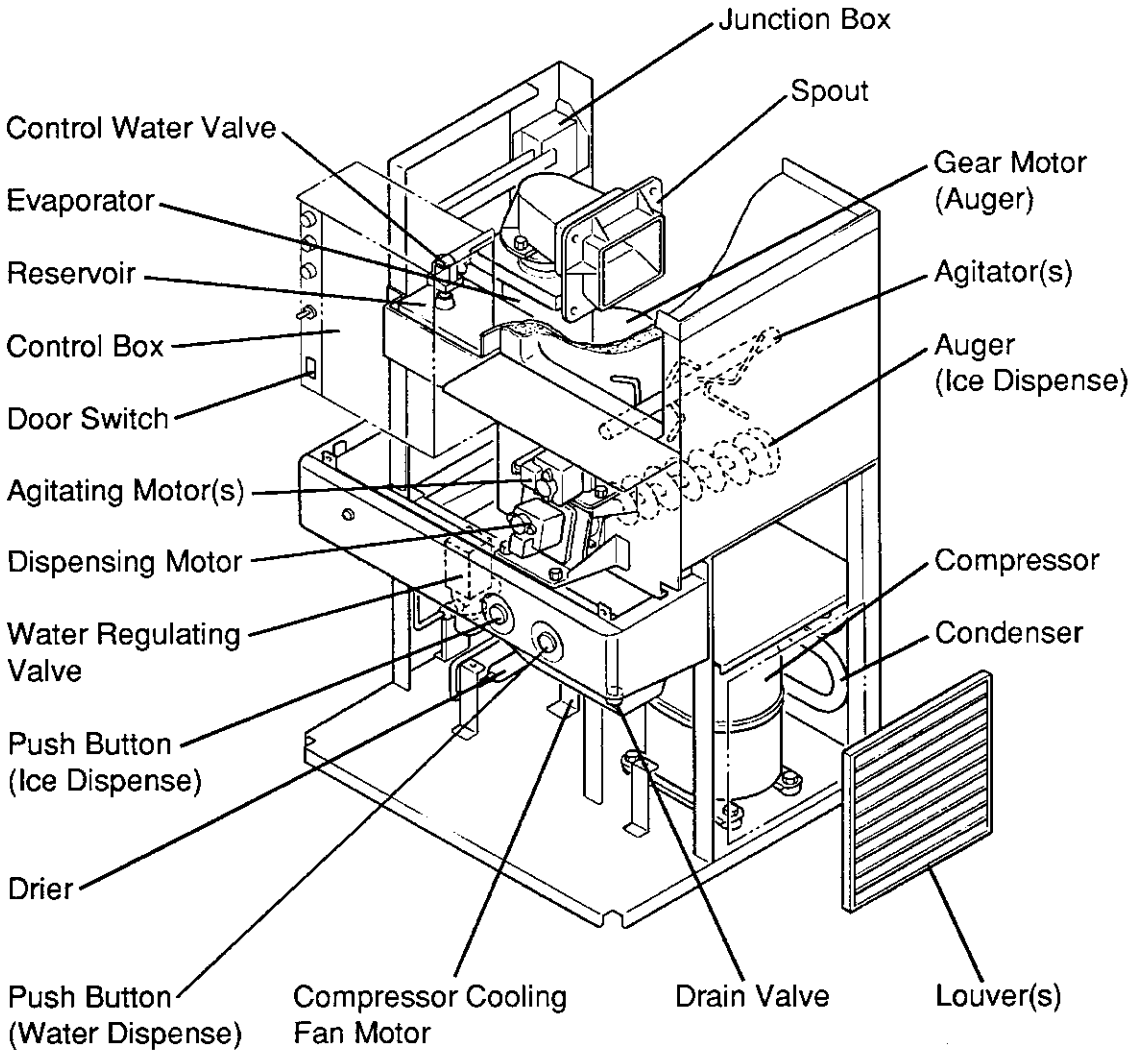
Junction Box
Spout
Control Water Valve
Gear Motor
(Auger)
Evaporator
Reservoir
Agitator(s)
Control Box
Auger
(Ice Dispense)
Door Switch
Agitating Motor(s)
Dispensing Motor
Compressor
Water Regulating
Valve
Condenser
Push Button
(Ice Dispense)
Drier
Push Button
(Water Dispense)
Compressor Cooling
Fan Motor
Drain Valve
Louver(s)

2. CONTROL BOX LAYOUT

DCM-450BAE, DCM-450BWE

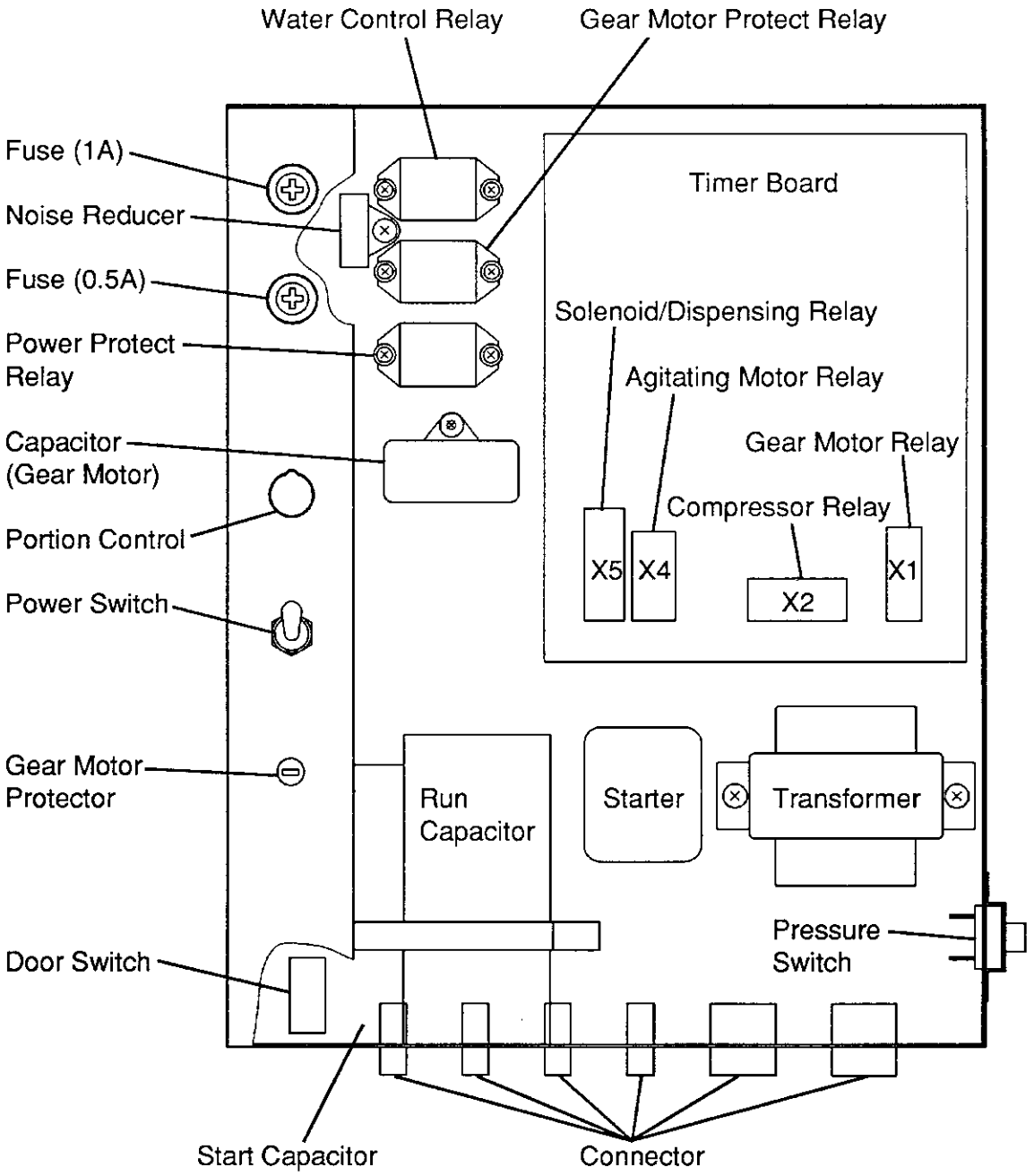

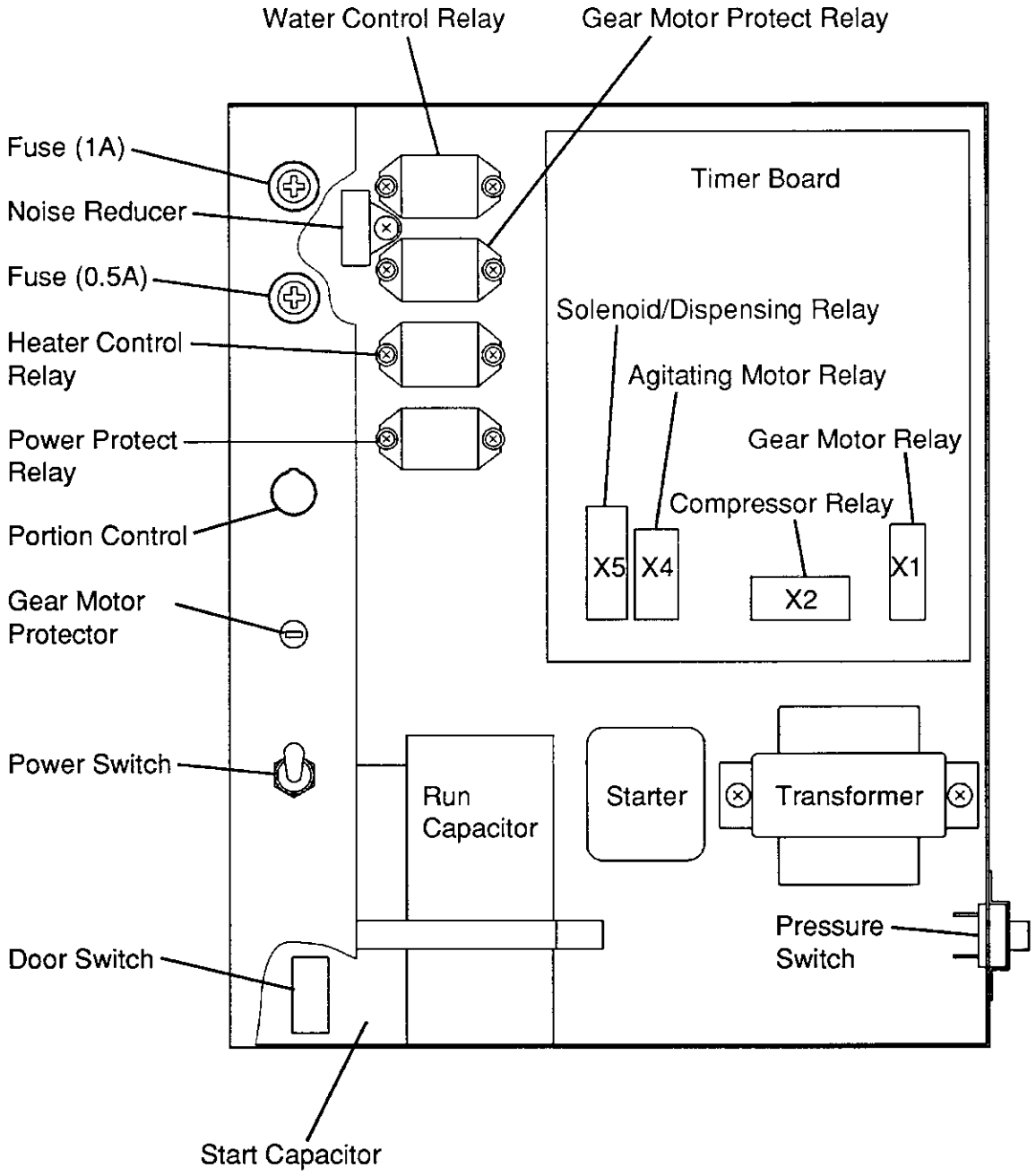
Water Control Relay
Gear Motor Protect Relay
Fuse (1A)
Noise Reducer
Fuse (0.5A)
Heater Control Relay
Power Protect Relay
Portion Control
Gear Motor Protector
Power Switch
Door Switch
Start Capacitor
Timer Board
Solenoid/Dispensing Relay
Agitating Motor Relay
Gear Motor Relay
Compressor Relay
X5
X4
X2
X1
Run Capacitor
Starter
Transformer
Pressure Switch

3. CABINET STAND

When placing the ice dispenser on the Cabinet Stand:

1) Attach four adjustable legs to the Cabinet Stand. (Cabinet Stand accessory)

2) Remove the protective plastic film from the panels.

3) Remove the Front Panel by lifting up and pull toward you.

4) Place the ice dispenser onto the Cabinet Stand.

Combination: SD-450 ..... DCM-450
SD-700 ..... DCM-700

5) Secure the ice dispenser to the Cabinet Stand with four bolts. (Cabinet Stand accessory)

6) Seal the seam all around between the ice dispenser and the Cabinet Stand with food grade silicone. See Fig. 1.

7) Replace the Front Panel in its correct position.

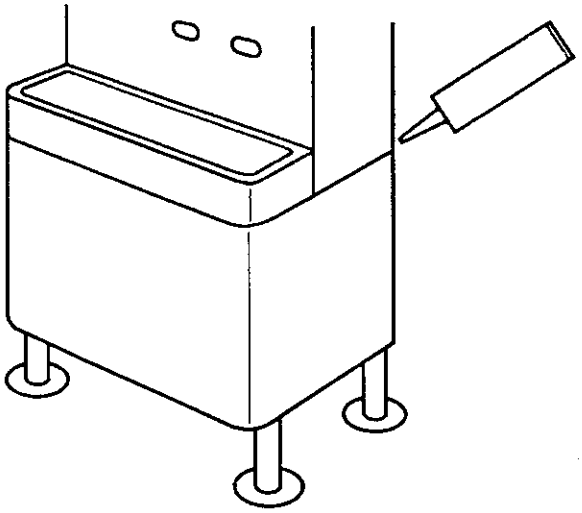

Fig. 1

DIMENSIONS WITH DCM-450 ON SD-450

Unit: inch (mm)

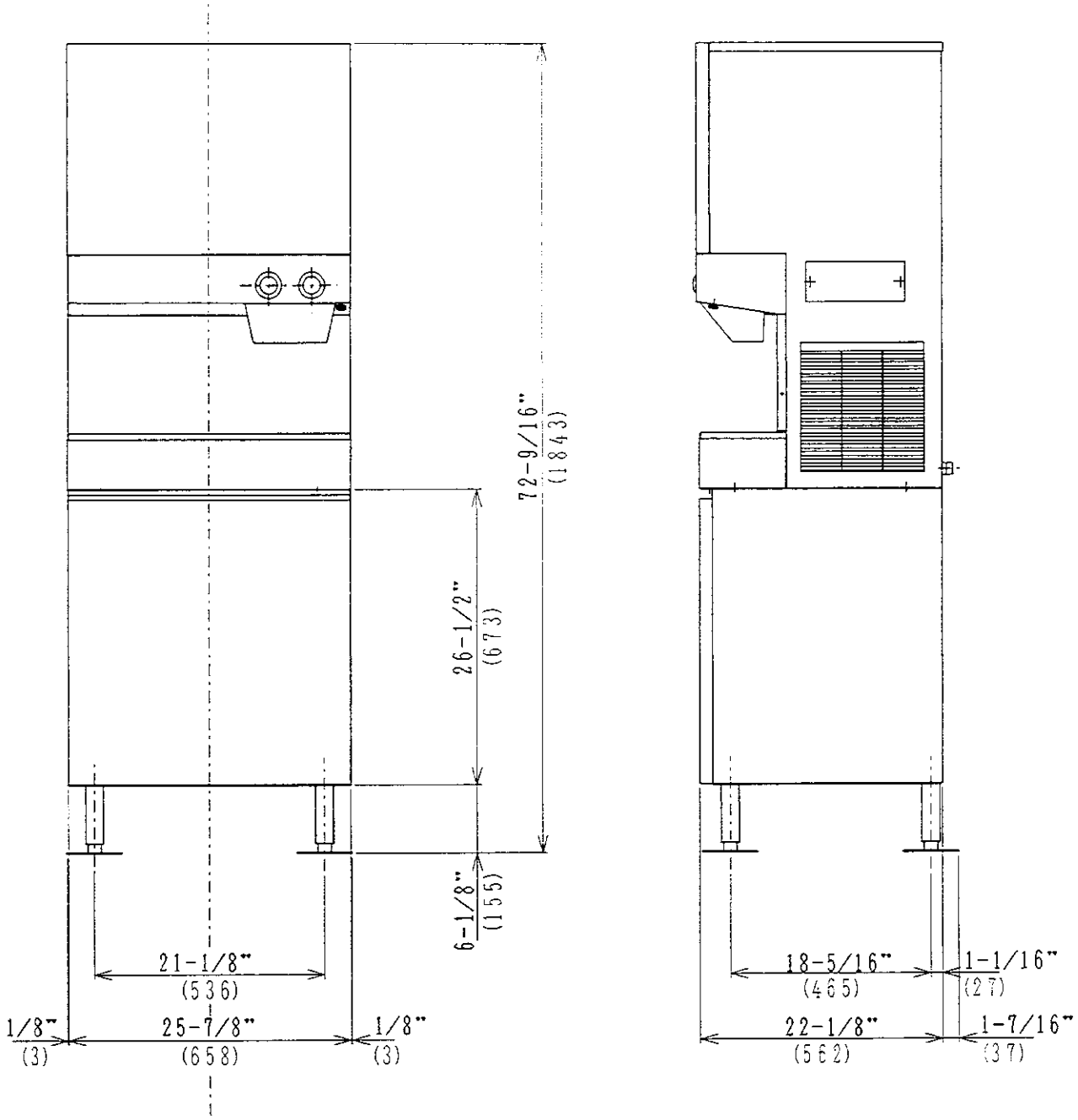

DIMENSIONS WITH DCM-700 ON SD-700

Unit: inch (mm)

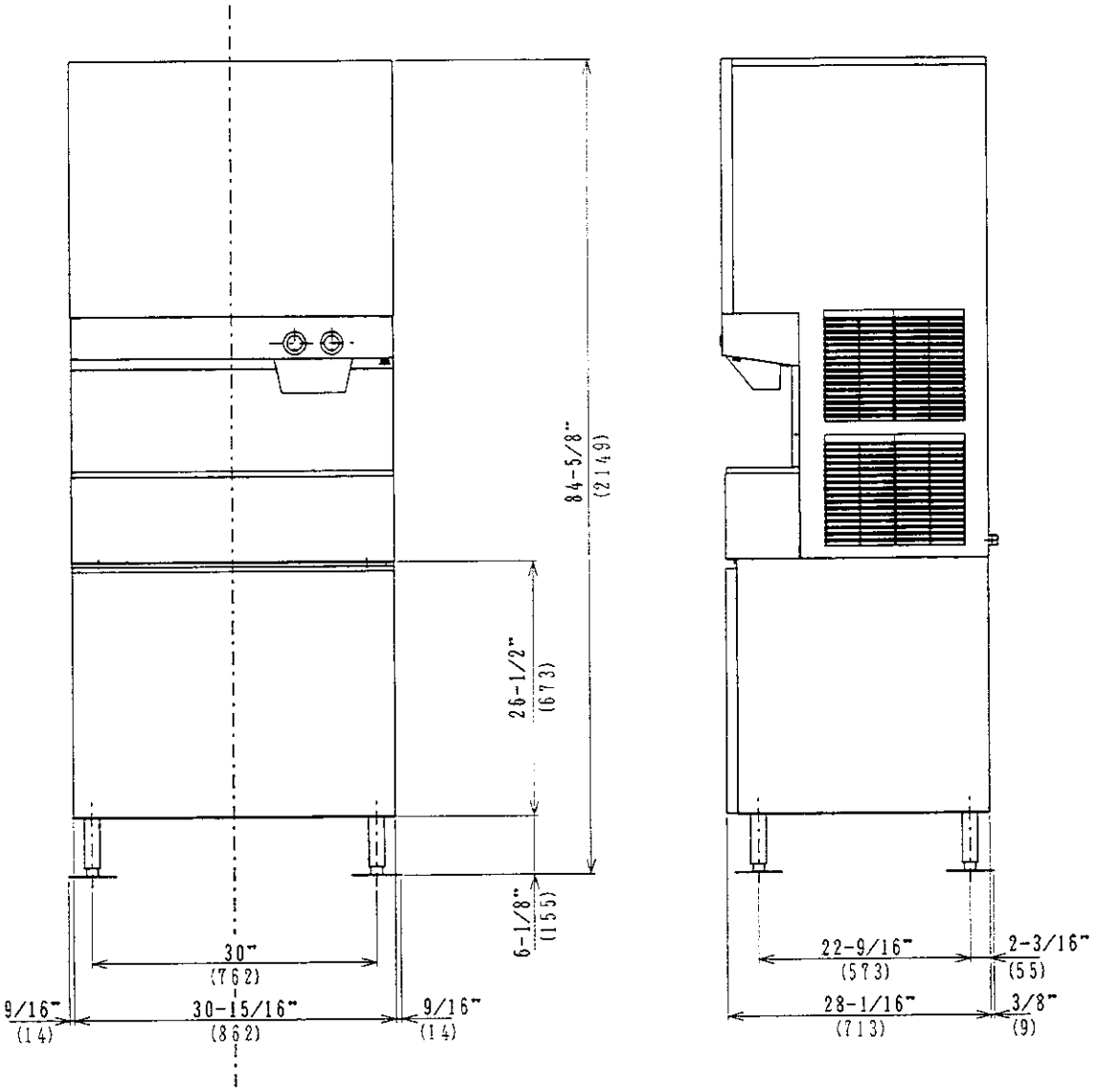

HOSHIZAKI

CUBELET ICE DISPENSER

III.

TECHNICAL INFORMATION

CONTENTS

PAGE

1. WATER CIRCUIT AND REFRIGERANT CIRCUIT III-1
   DCM-450BAE III-1
   DCM-450BWE III-2
   DCM-700BAE III-3
   DCM-700BWE III-4

2. WIRING DIAGRAM III-5
   DCM-450BAE, DCM-450BWE III-5
   DCM-700BAE, DCM-700BWE III-6

3. SEQUENCE OF ELECTRICAL CIRCUIT III-7

4. TIMING CHART III-29

5. TIMER BOARD III-30
   [a] SOLID-STATE CONTROL III-30
   [b] TIMER BOARD III-30
   [c] SEQUENCE III-32

6. PERFORMANCE DATA III-34
   DCM-450BAE III-34
   DCM-450BWE III-35
   DCM-700BAE III-36
   DCM-700BWE III-37

1. WATER CIRCUIT AND REFRIGERANT CIRCUIT

DCM-450BAE

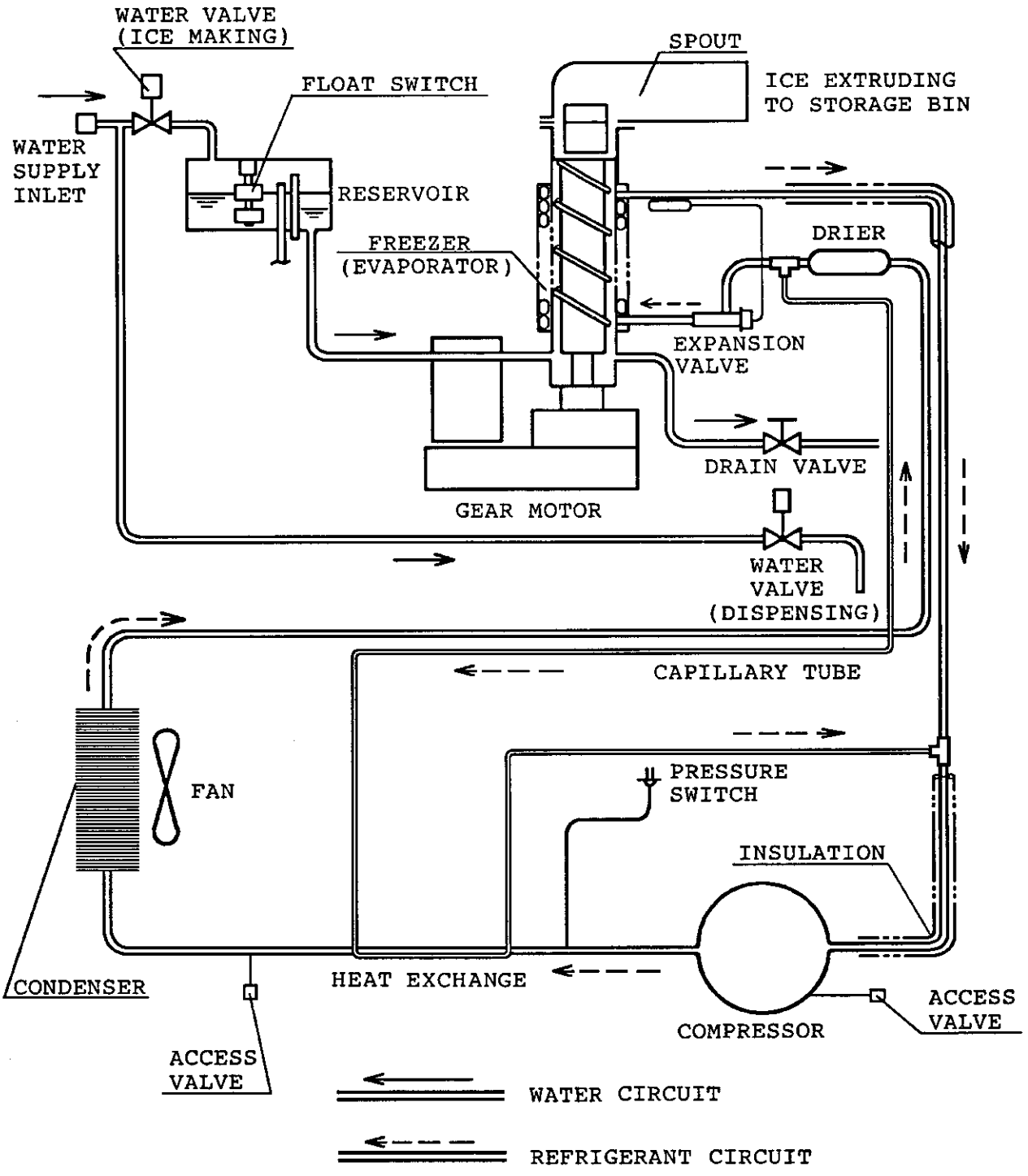

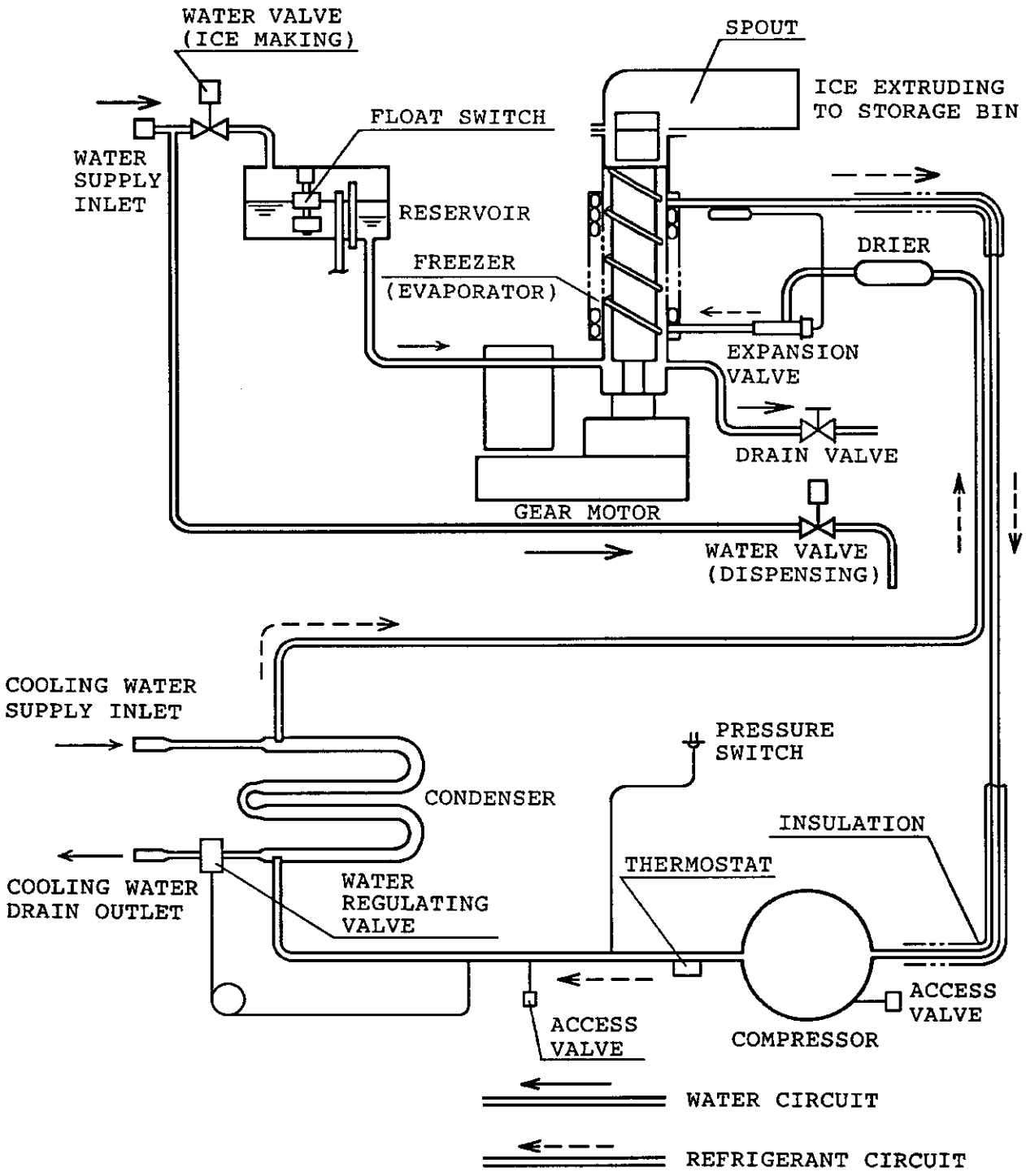
WATER VALVE
(ICE MAKING)
SPOUT
ICE EXTRUDING
TO STORAGE BIN
FLOAT SWITCH
WATER
SUPPLY
INLET
RESERVOIR
DRIER
FREEZER
(EVAPORATOR)
EXPANSION
VALVE
DRAIN VALVE
GEAR MOTOR
WATER VALVE
(DISPENSING)
COOLING WATER
SUPPLY INLET
PRESSURE
SWITCH
CONDENSER
INSULATION
THERMOSTAT
COOLING WATER
DRAIN OUTLET
WATER
REGULATING
VALVE
ACCESS
VALVE
ACCESS
VALVE
COMPRESSOR
WATER CIRCUIT
REFRIGERANT CIRCUIT

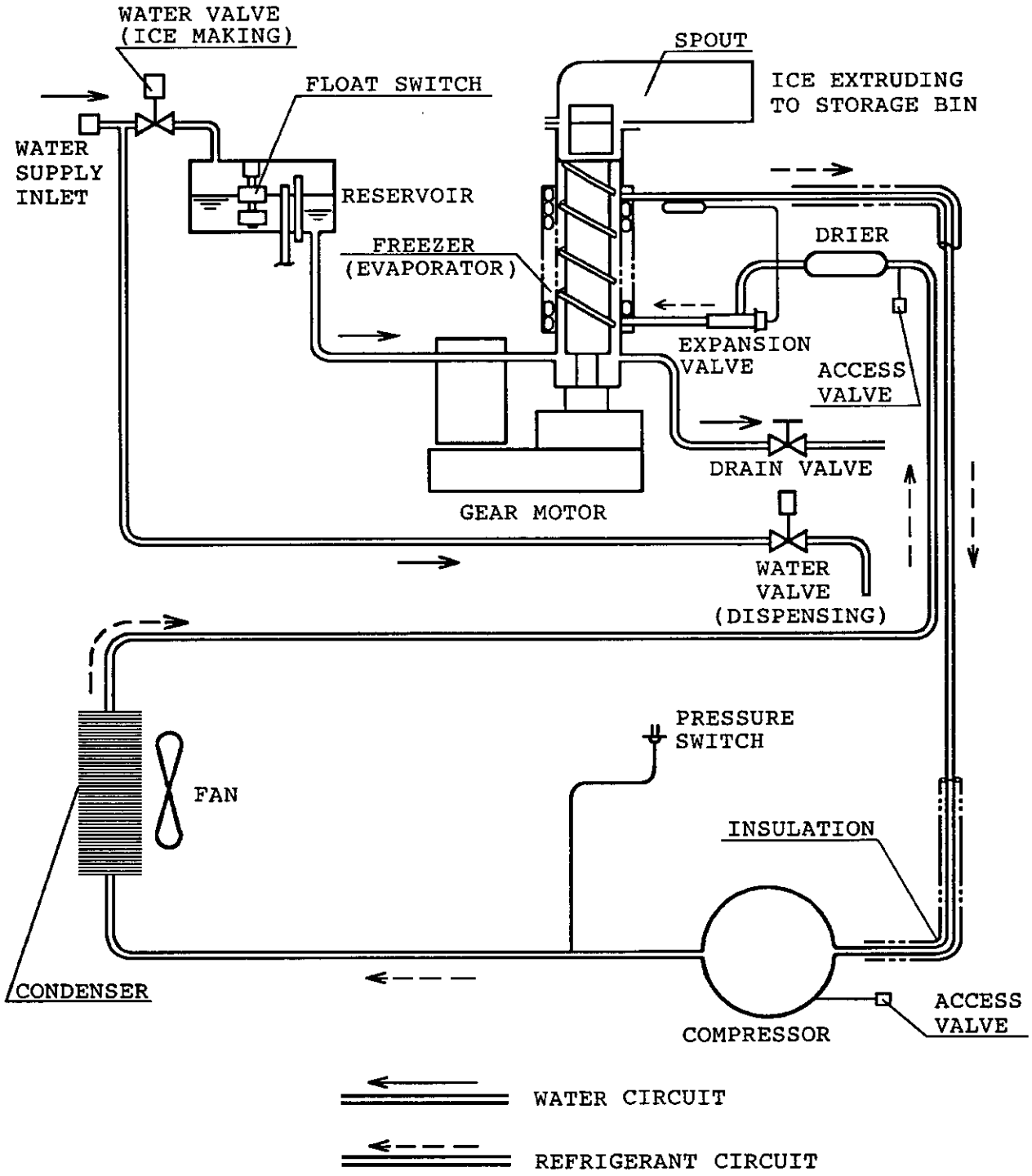
WATER VALVE
(ICE MAKING)
SPOUT
ICE EXTRUDING
TO STORAGE BIN
FLOAT SWITCH
WATER
SUPPLY
INLET
RESERVOIR
DRIER
FREEZER
(EVAPORATOR)
EXPANSION
VALVE
ACCESS
VALVE
DRAIN VALVE
GEAR MOTOR
WATER
VALVE
(DISPENSING)
PRESSURE
SWITCH
FAN
INSULATION
CONDENSER
COMPRESSOR
ACCESS
VALVE
WATER CIRCUIT
REFRIGERANT CIRCUIT

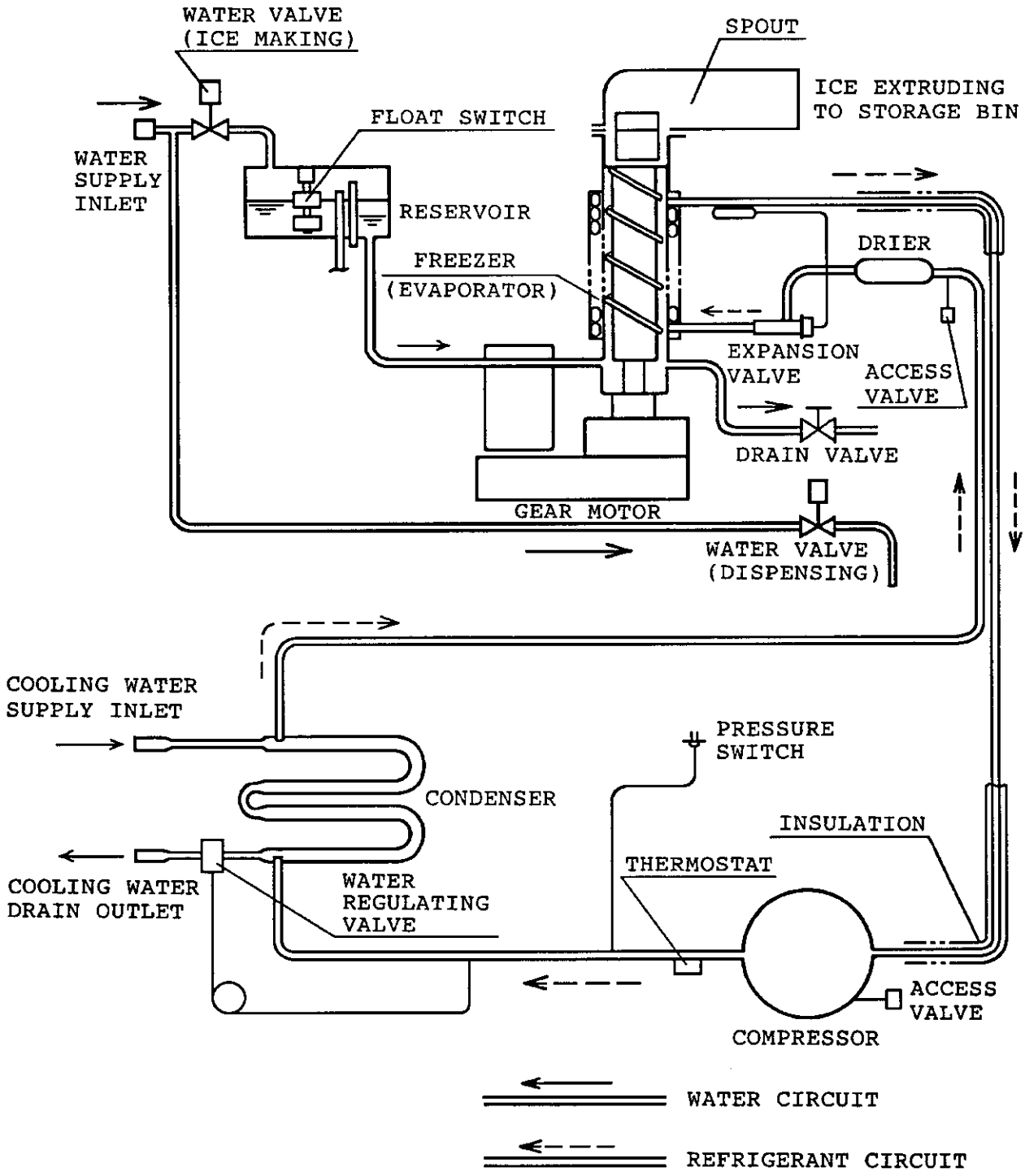
WATER VALVE
(ICE MAKING)
SPOUT
ICE EXTRUDING
TO STORAGE BIN
FLOAT SWITCH
WATER
SUPPLY
INLET
RESERVOIR
DRIER
FREEZER
(EVAPORATOR)
EXPANSION
VALVE
ACCESS
VALVE
DRAIN VALVE
GEAR MOTOR
WATER VALVE
(DISPENSING)
COOLING WATER
SUPPLY INLET
PRESSURE
SWITCH
CONDENSER
INSULATION
THERMOSTAT
COOLING WATER
DRAIN OUTLET
WATER
REGULATING
VALVE
ACCESS
VALVE
COMPRESSOR
WATER CIRCUIT
REFRIGERANT CIRCUIT

2. WIRING DIAGRAM

DCM-450BAE, DCM-450BWE

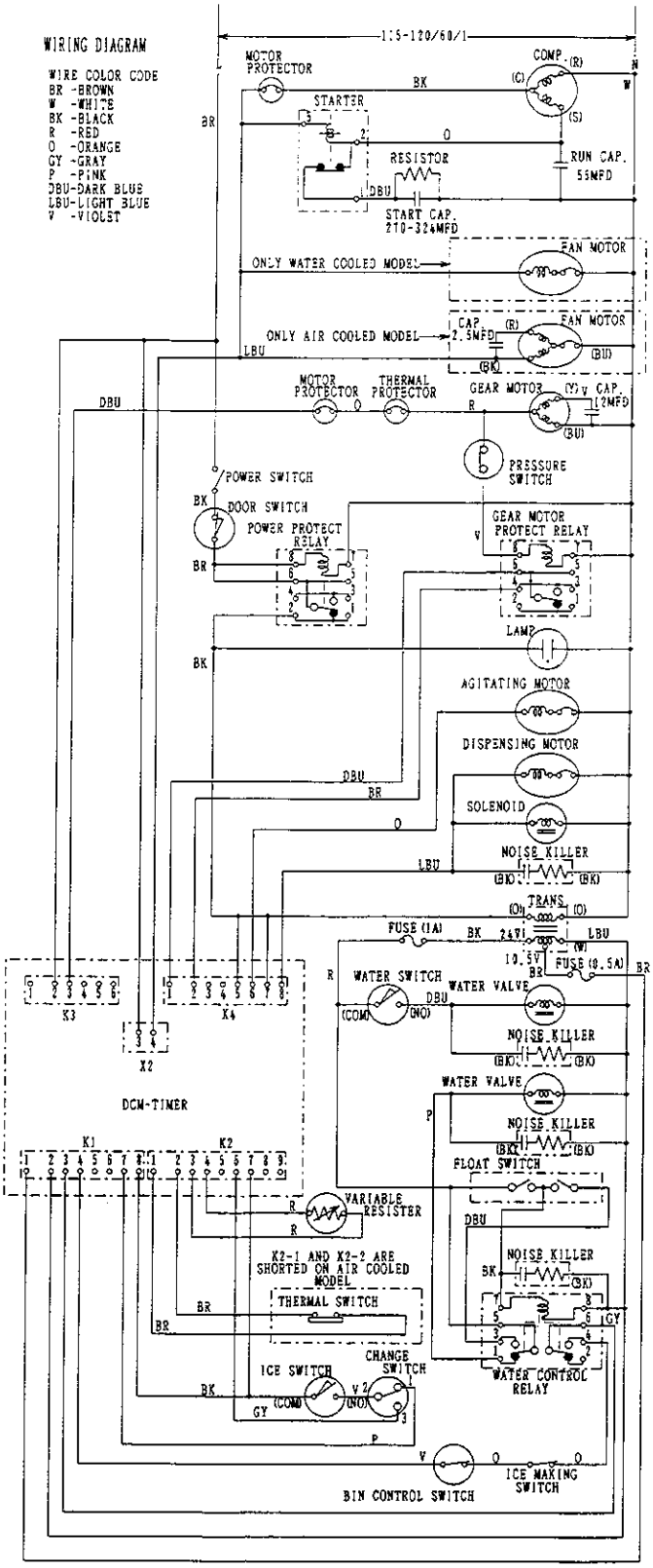

DCM-700BAE, DCM-700BWE

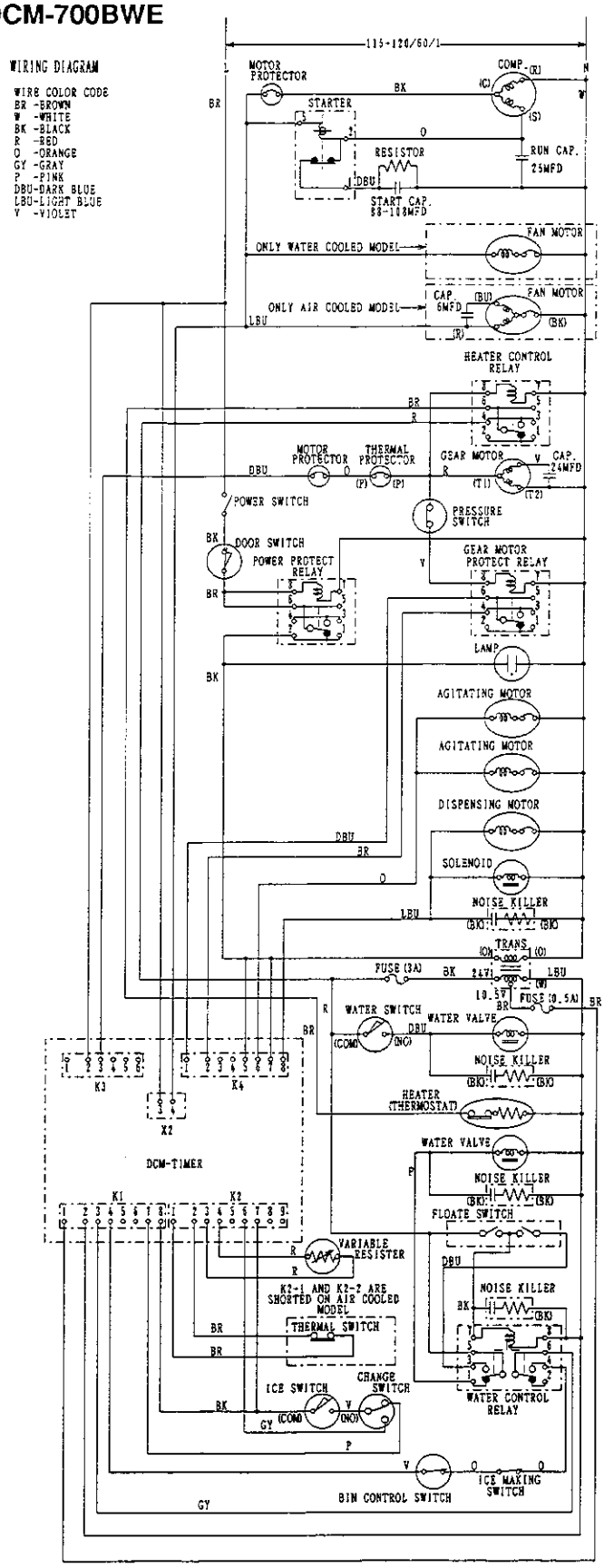

3. SEQUENCE OF ELECTRICAL CIRCUIT

[a] When Power Switch and Ice Making Switch are moved to "ON" position, water starts to be supplied to Reservoir.

Note: When 208-230 V are supplied to Circuit Protect Relay, it operates and protects the circuit from miswiring. If the power supply is properly connected, the contact of Circuit Protect Relay does not move even when the coil is energized.

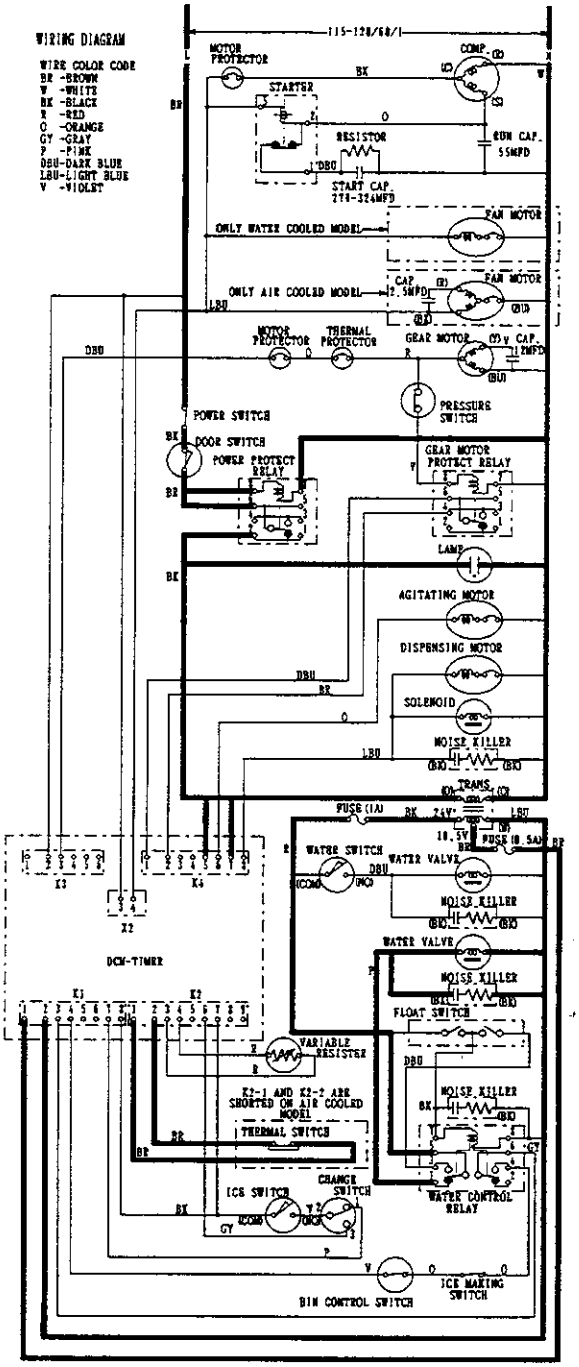

[DCM-450]

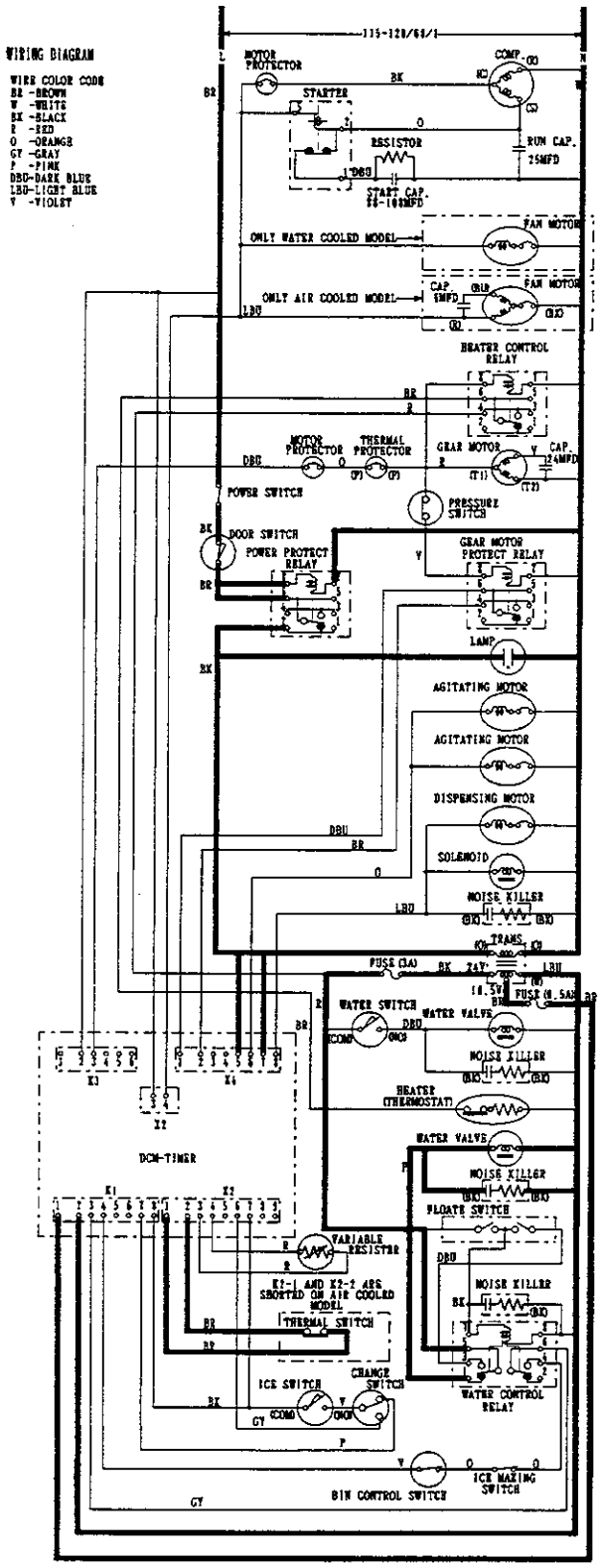
WIRING DIAGRAM
WIRE COLOR CODE
BR -BROWN
W -WHITE
BK -BLACK
R -RED
O -ORANGE
GY -GRAY
P -PINK
DBU-DARK BLUE
LBU-LIGHT BLUE
V -VIOLET
115-120/60/1
MOTOR PROTECTOR
COMP.
STARTER
RESISTOR
RUN CAP. 25MFD
START CAP. 88-108MFD
FAN MOTOR
ONLY WATER COOLED MODEL
ONLY AIR COOLED MODEL
CAP. 5MFD
HEATER CONTROL RELAY
THERMAL PROTECTOR
GEAR MOTOR
CAP. 12.5MFD
POWER SWITCH
PRESSURE SWITCH
DOOR SWITCH
POWER PROTECT RELAY
GEAR MOTOR PROTECT RELAY
LAMP
AGITATING MOTOR
DISPENSING MOTOR
SOLENOID
NOISE KILLER
TRANS.
FUSE (3A)
24V
14.5V
FUSE (0.5A)
WATER SWITCH
WATER VALVE
HEATER (THERMOSTAT)
DCM-TIMER
FLOATE SWITCH
VARIABLE RESISTER
K2-1 AND K2-2 ARE SHORTED ON AIR COOLED MODEL
THERMAL SWITCH
ICE SWITCH
CHANGE SWITCH
WATER CONTROL RELAY
BIN CONTROL SWITCH
ICE MAKING SWITCH

[DCM-700]

[b] When Reservoir has been filled up, Gear Motor starts immediately.

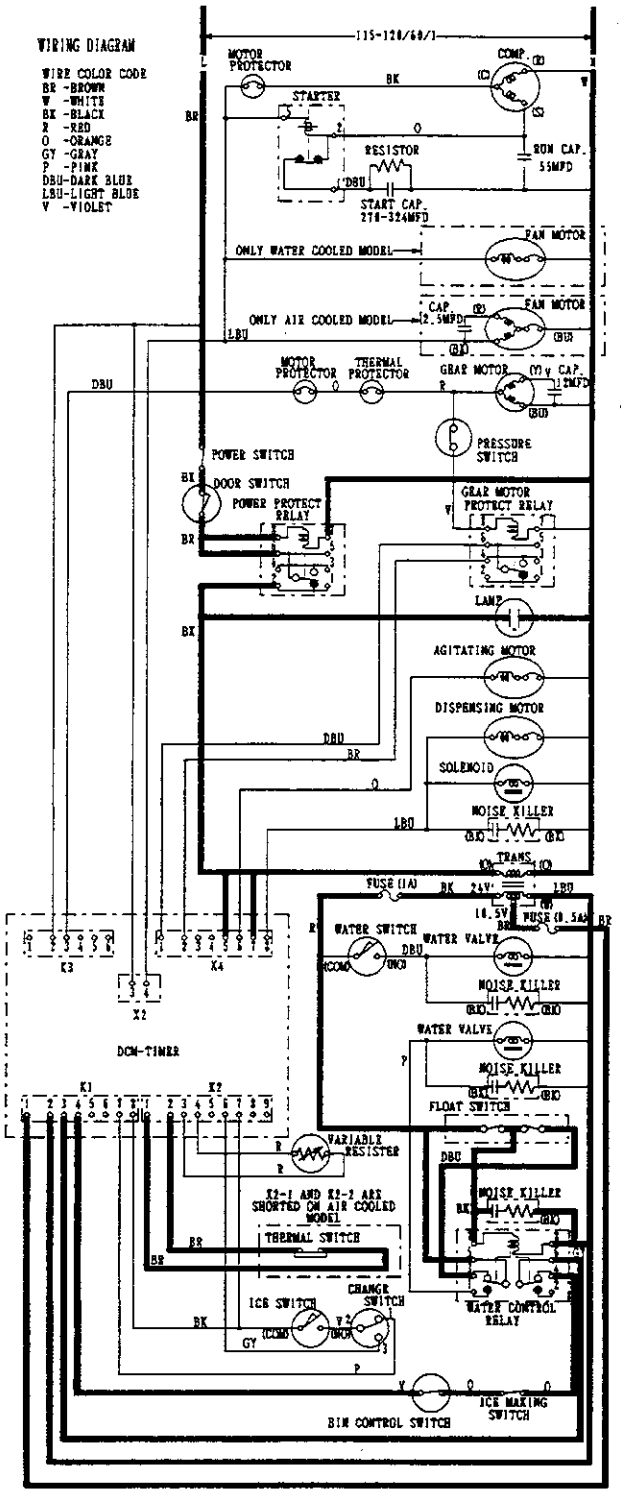

[DCM-450 - Step 1: Reservoir filled up.]

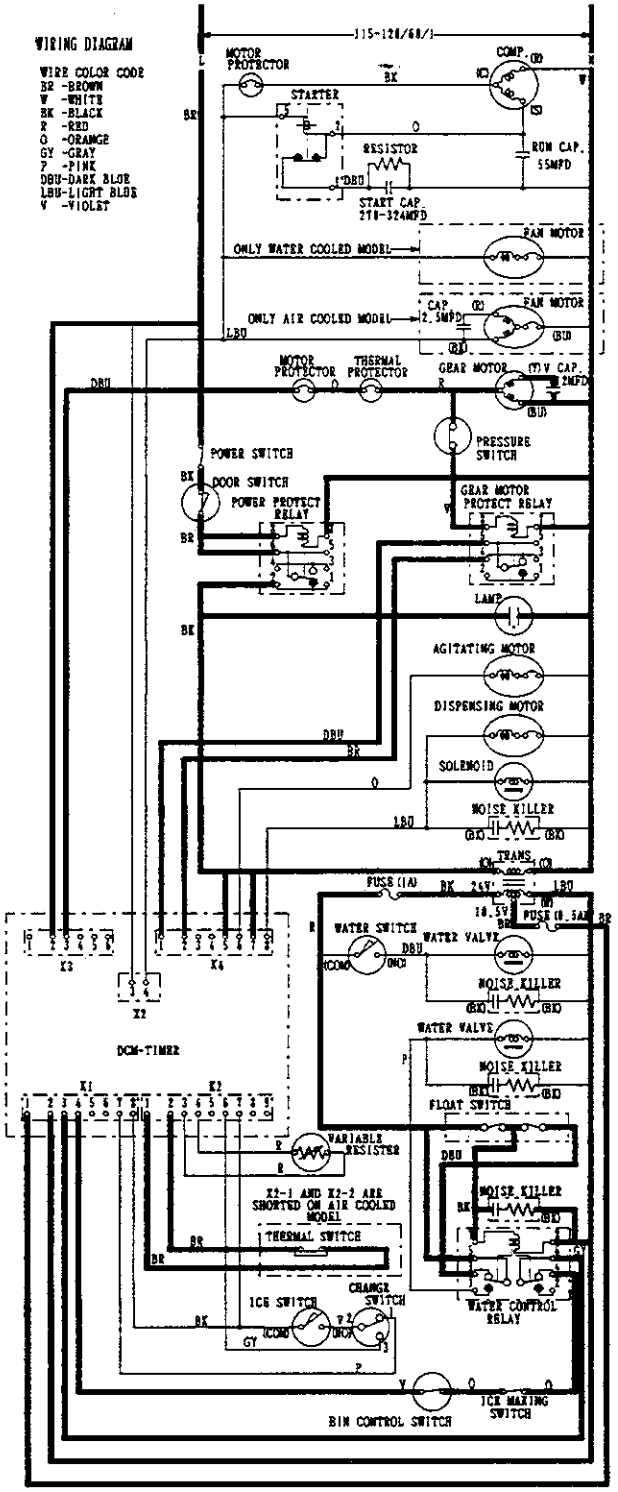

[DCM-450 - Step 2: Gear Motor starts.]

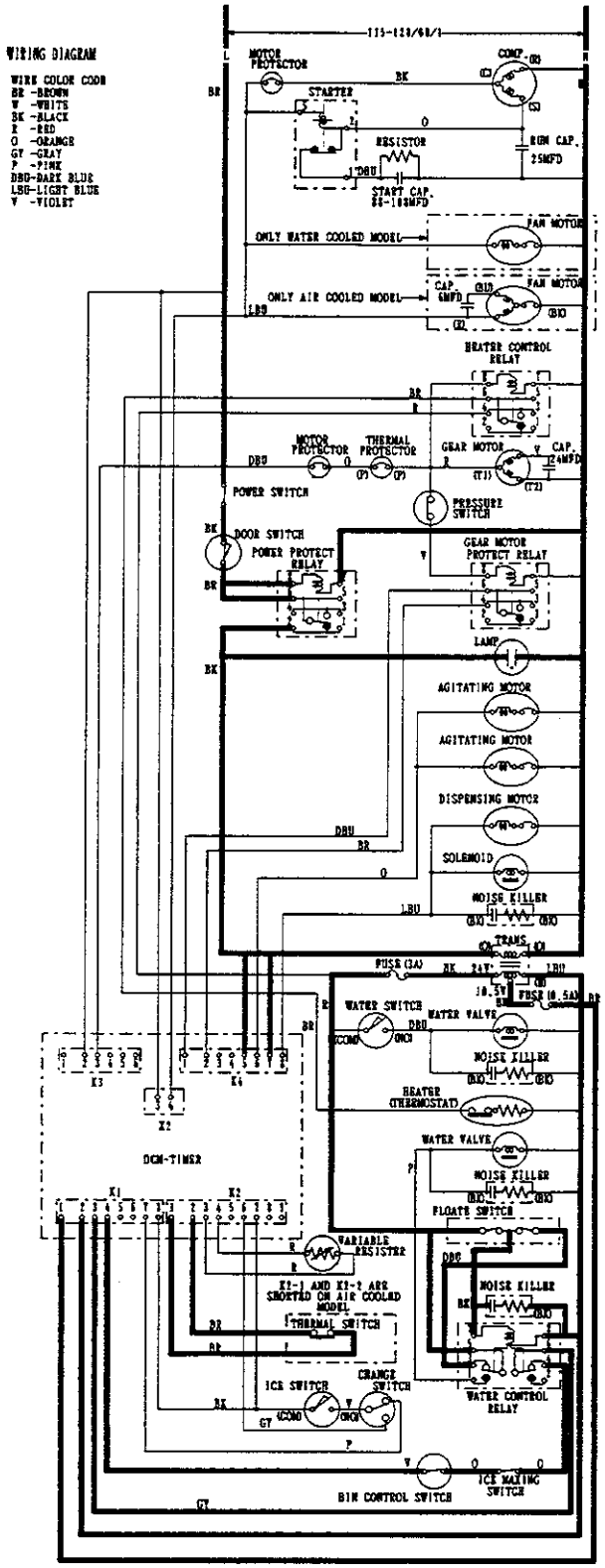

[DCM-700 - Step 1: Reservoir filled up.]

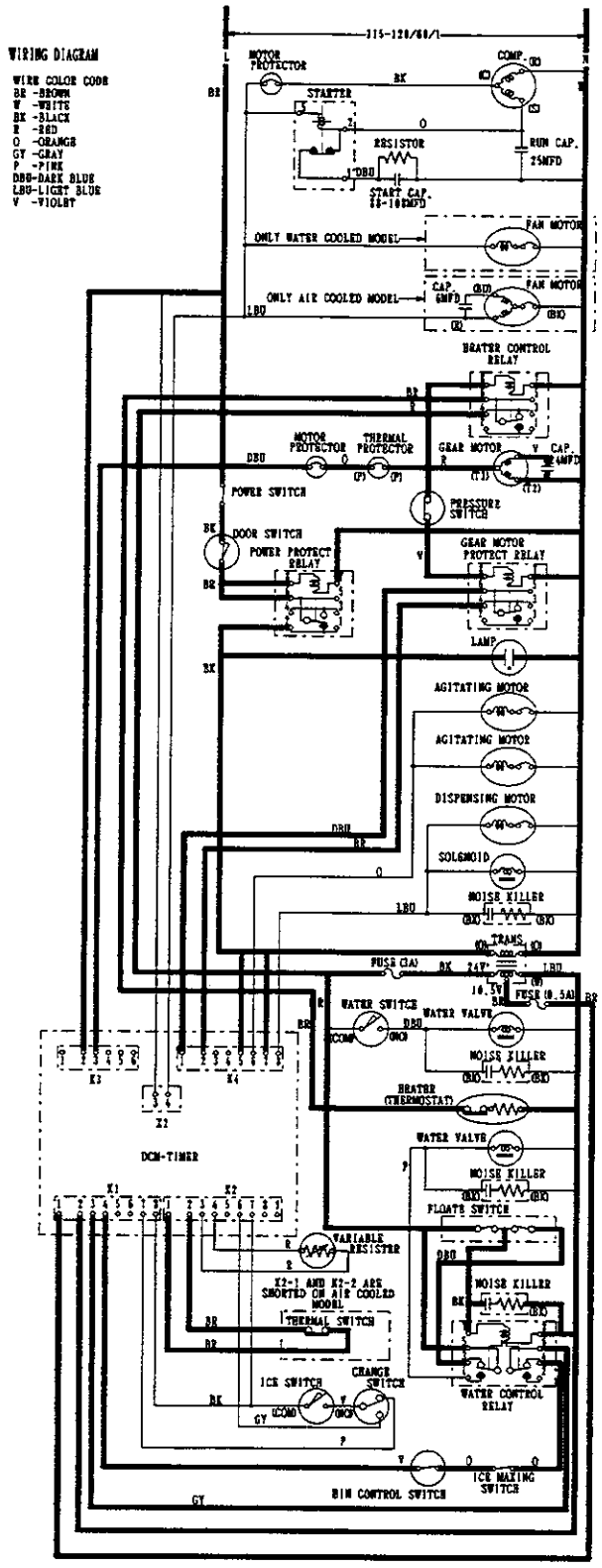

[DCM-700 - Step 2: Gear Motor starts.]

[c] Compressor starts about 60 sec. after Gear Motor starts.

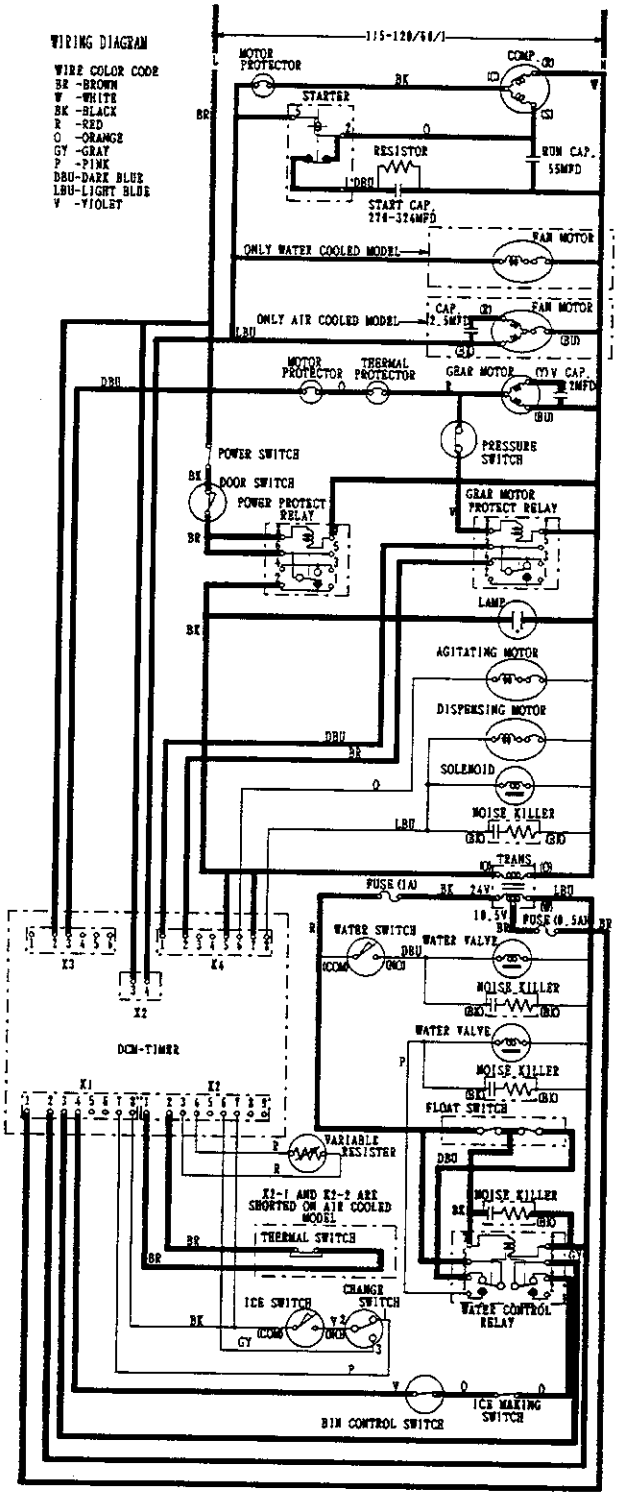

[DCM-450]

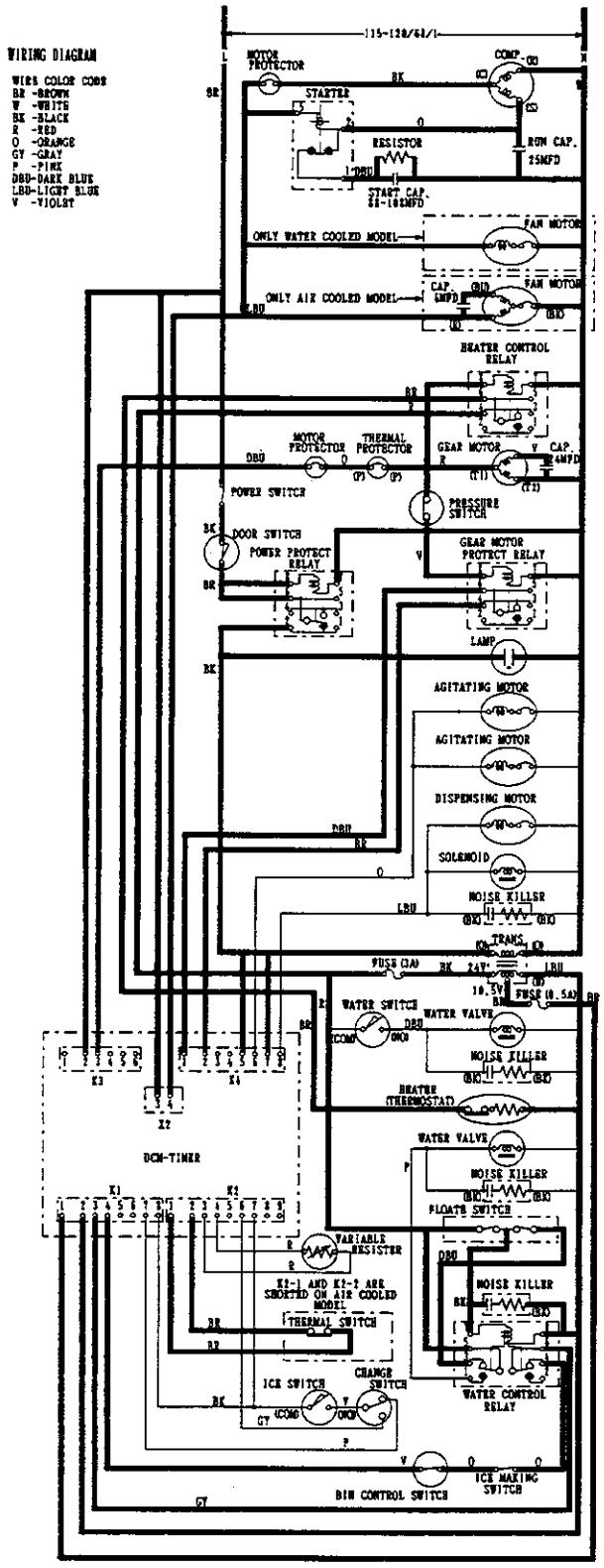
WIRING DIAGRAM
WIRE COLOR CODE
BR -BROWN
W -WHITE
BK -BLACK
R -RED
O -ORANGE
GY -GRAY
P -PINK
DBU-DARK BLUE
LBU-LIGHT BLUE
V -VIOLET
115-120/60/1
MOTOR PROTECTOR
COMP.
STARTER
RESISTOR
RUN CAP. 25MFD
START CAP. 88-108MFD
ONLY WATER COOLED MODEL
FAN MOTOR
ONLY AIR COOLED MODEL
CAP. 5MFD
HEATER CONTROL RELAY
THERMAL PROTECTOR
GEAR MOTOR
CAP. 4MFD
POWER SWITCH
PRESSURE SWITCH
DOOR SWITCH
POWER PROTECT RELAY
GEAR MOTOR PROTECT RELAY
LAMP
AGITATING MOTOR
DISPENSING MOTOR
SOLENOID
NOISE KILLER
TRANS.
FUSE (3A)
24V
10.5V
FUSE (0.5A)
WATER SWITCH
WATER VALVE
HEATER (THERMOSTAT)
DCM-TIMER
FLOATE SWITCH
VARIABLE RESISTOR
K2-1 AND K2-2 ARE SHORTED ON AIR COOLED MODEL
THERMAL SWITCH
ICE SWITCH
CHANGE SWITCH
WATER CONTROL RELAY
ICE MAKING SWITCH
BIN CONTROL SWITCH

[DCM-700]

[d] Ice making process continues.

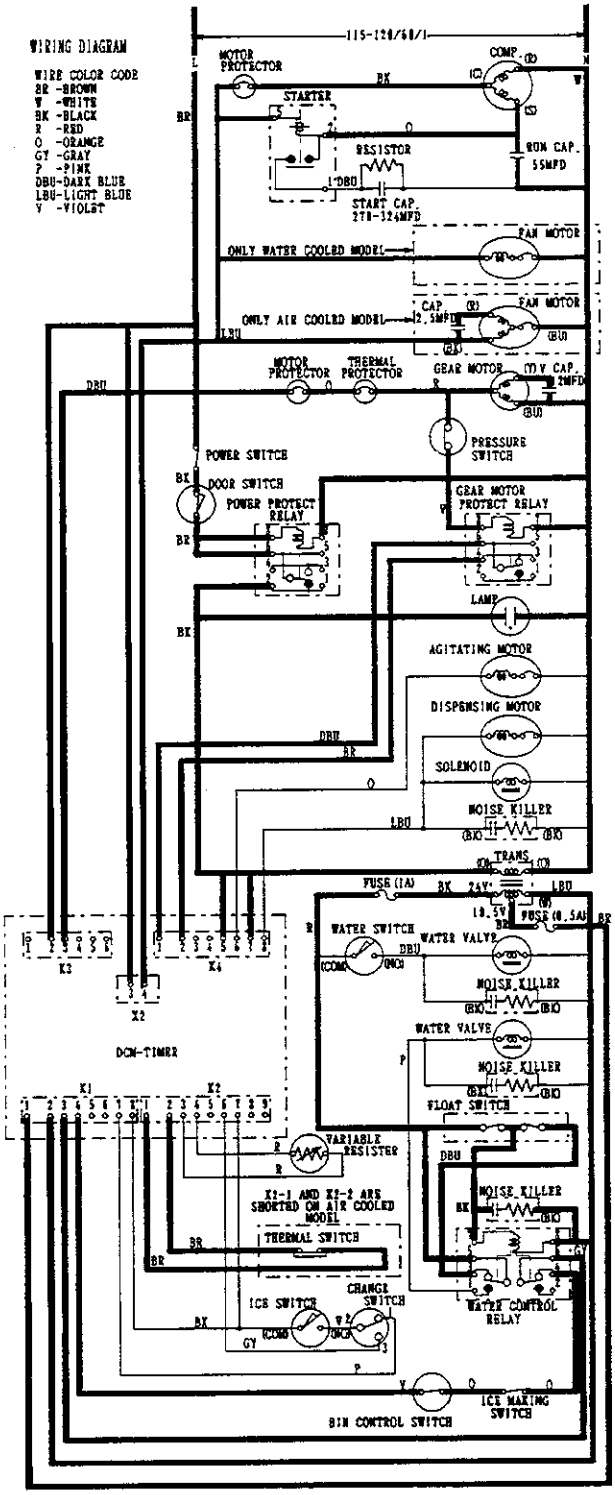

[DCM-450]

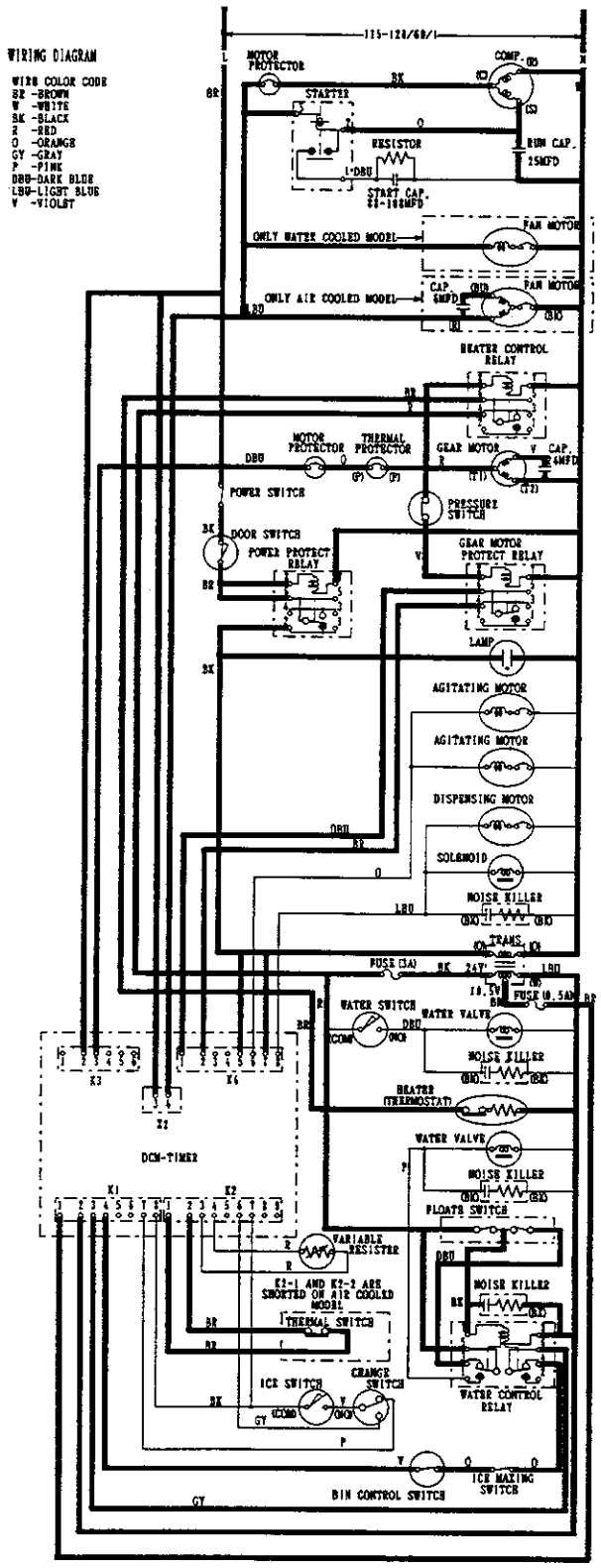
WIRING DIAGRAM
WIRE COLOR CODE
BR -BROWN
W -WHITE
BK -BLACK
R -RED
O -ORANGE
GY -GRAY
P -PINK
DBU-DARK BLUE
LBU-LIGHT BLUE
V -VIOLET
115-120/60/1
MOTOR PROTECTOR
COMP.
STARTER
RESISTOR
RUN CAP. 25MFD
START CAP. 82-108MFD
ONLY WATER COOLED MODEL
FAN MOTOR
ONLY AIR COOLED MODEL
CAP. 6MFD
HEATER CONTROL RELAY
MOTOR PROTECTOR
THERMAL PROTECTOR
GEAR MOTOR
CAP. 6MFD
POWER SWITCH
PRESSURE SWITCH
DOOR SWITCH
POWER PROTECT RELAY
GEAR MOTOR PROTECT RELAY
LAMP
AGITATING MOTOR
AGITATING MOTOR
DISPENSING MOTOR
SOLENOID
NOISE KILLER
TRANS.
FUSE (3A)
FUSE (0.5A)
WATER SWITCH
WATER VALVE
NOISE KILLER
HEATER (THERMOSTAT)
WATER VALVE
NOISE KILLER
FLOATS SWITCH
VARIABLE RESISTER
K3
K4
Z2
DCM-TIMER
K1
K2
K2-1 AND K2-2 ARE SHORTED ON AIR COOLED MODEL
THERMAL SWITCH
NOISE KILLER
WATER CONTROL RELAY
ICE SWITCH
CHANGE SWITCH
ICE MAKING SWITCH
BIN CONTROL SWITCH

[DCM-700]

[e] Bin Control Switch tripped. Compressor stops about 90 sec. later. Agitating Motor operates for about 0.6 sec.

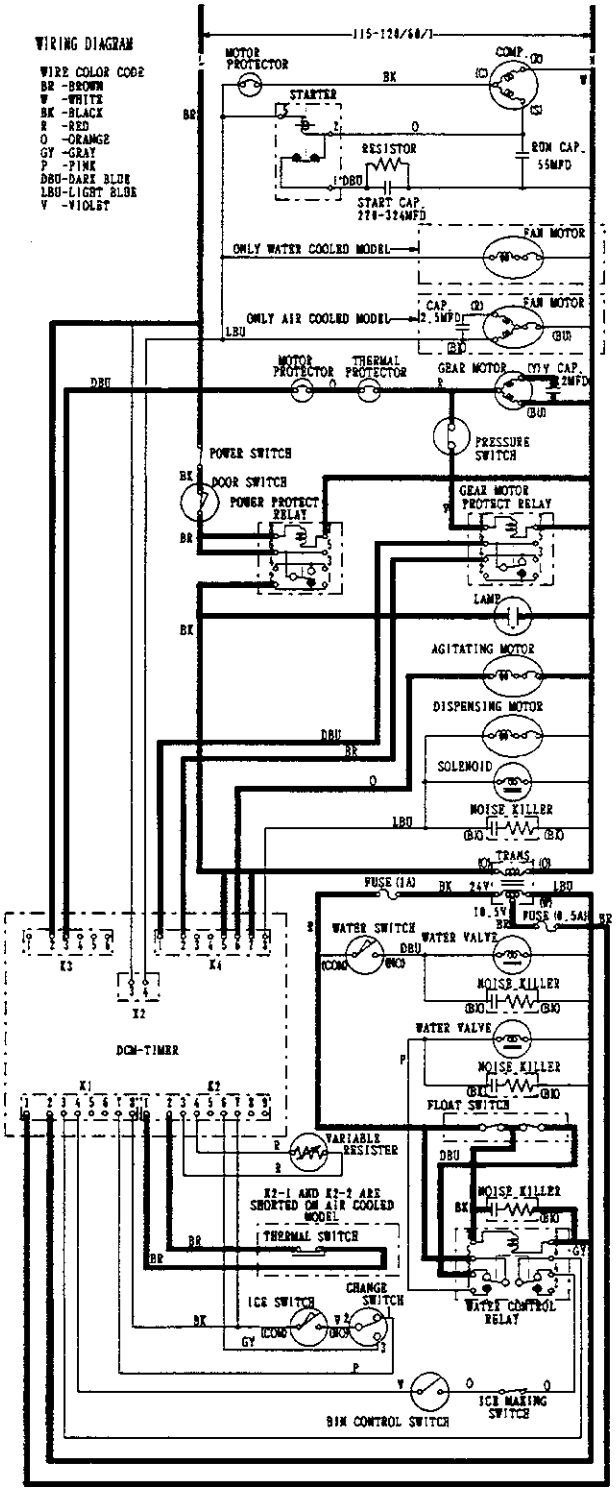

[DCM-450]

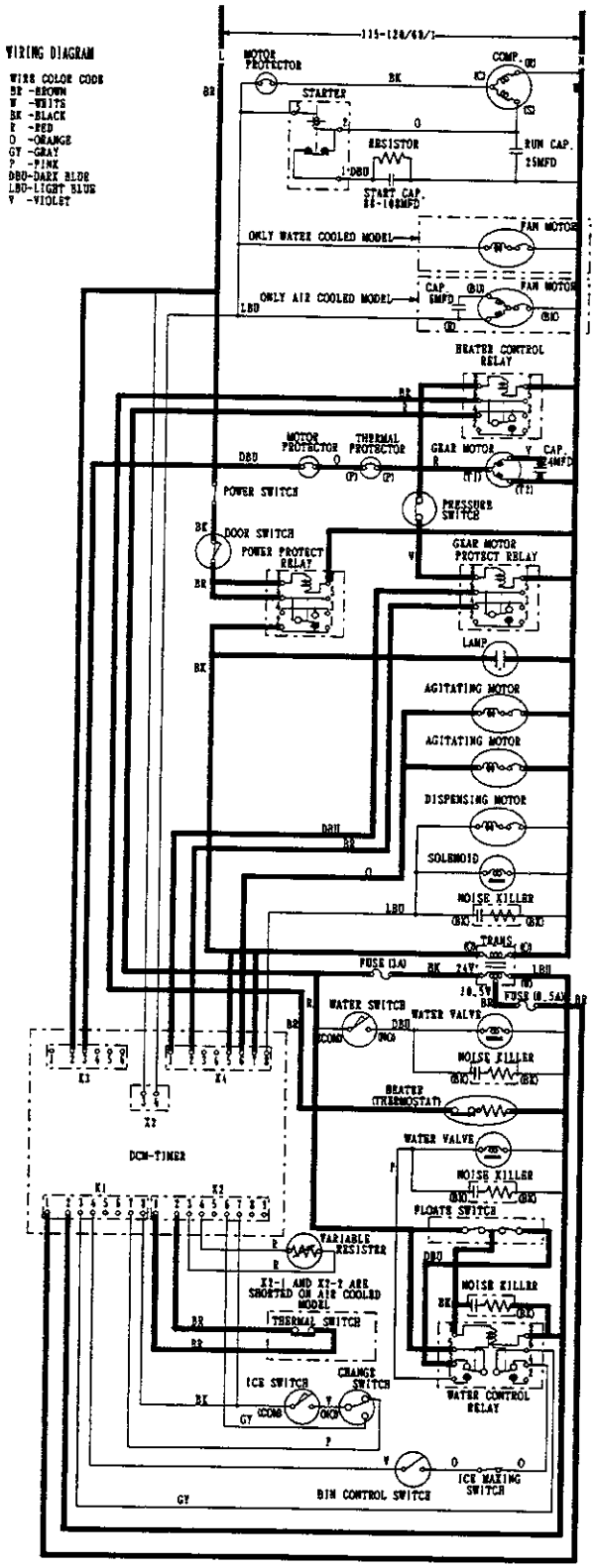
WIRING DIAGRAM
WIRE COLOR CODE
BR -BROWN
W -WHITE
BK -BLACK
R -RED
O -ORANGE
GY -GRAY
P -PINK
DBO-DARK BLUE
LBO-LIGHT BLUE
V -VIOLET
115-120/60/1
MOTOR PROTECTOR
COMP.
STARTER
RESISTOR
RUN CAP. 25MFD
START CAP. 88-108MFD
ONLY WATER COOLED MODEL
FAN MOTOR
ONLY AIR COOLED MODEL
CAP. 5MFD
HEATER CONTROL RELAY
THERMAL PROTECTOR
GEAR MOTOR
CAP. 24MFD
POWER SWITCH
PRESSURE SWITCH
DOOR SWITCH
POWER PROTECT RELAY
GEAR MOTOR PROTECT RELAY
LAMP
AGITATING MOTOR
DISPENSING MOTOR
SOLENOID
NOISE KILLER
TRANS.
FUSE (3A)
24V
10.5V
FUSE (0.5A)
WATER SWITCH
WATER VALVE
HEATER (THERMOSTAT)
DCM-TIMER
FLOATS SWITCH
VARIABLE RESISTER
X1-1 AND X1-2 ARE SHORTED ON AIR COOLED MODEL
THERMAL SWITCH
ICE SWITCH
CHANGE SWITCH
WATER CONTROL RELAY
BIN CONTROL SWITCH
ICE MAKING SWITCH

[DCM-700]

[f] Gear Motor stops about 60 sec. after Compressor stops.

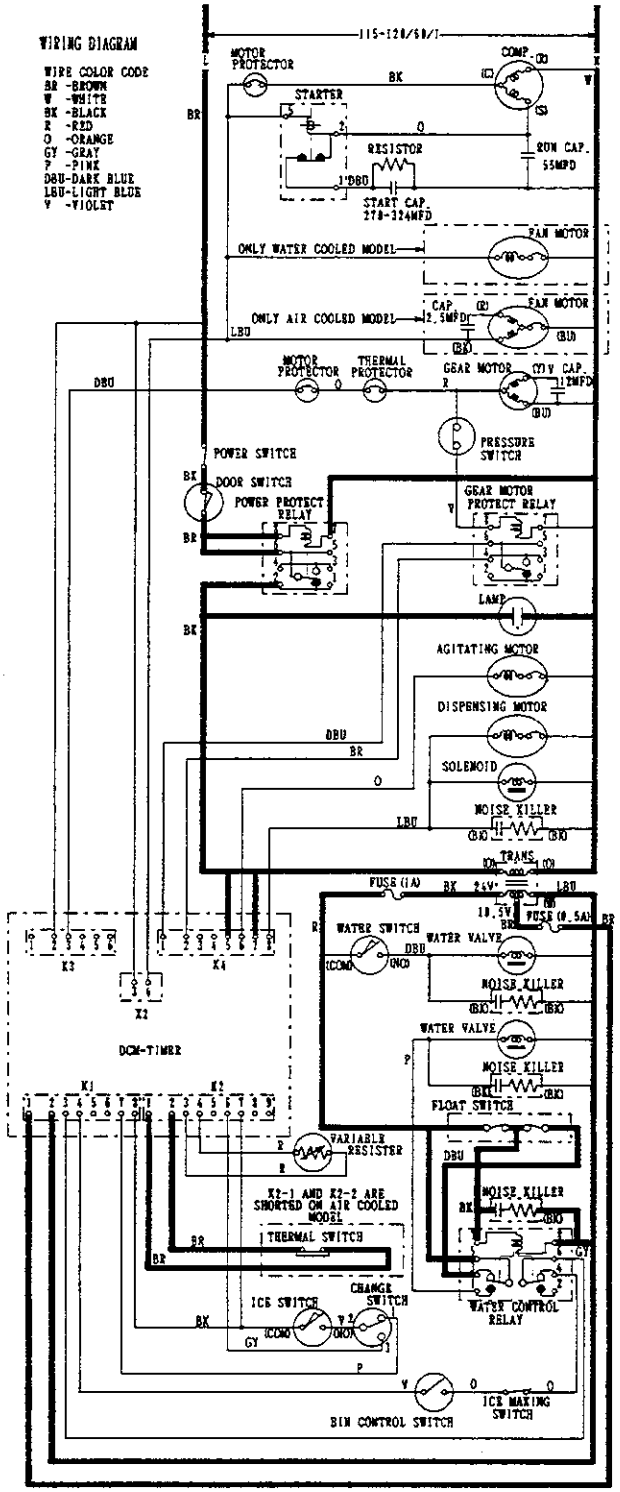

[DCM-450]

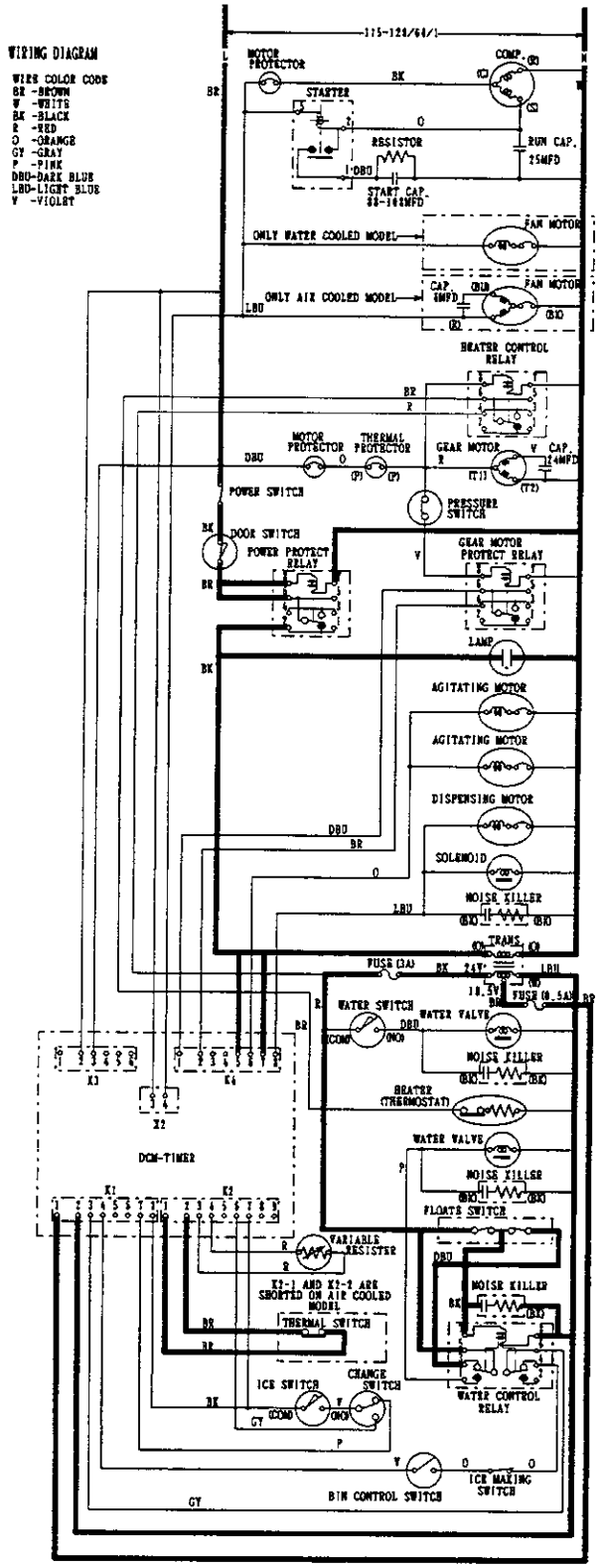
WIRING DIAGRAM
WIRE COLOR CODE
BR -BROWN
W -WHITE
BK -BLACK
R -RED
O -ORANGE
GY -GRAY
P -PINK
DBU-DARK BLUE
LBU-LIGHT BLUE
V -VIOLET
MOTOR PROTECTOR
COMP.
STARTER
RESISTOR
RUN CAP. 25MFD
START CAP.
ONLY WATER COOLED MODEL
FAN MOTOR
ONLY AIR COOLED MODEL
CAP. 4MFD
HEATER CONTROL RELAY
THERMAL PROTECTOR
GEAR MOTOR
CAP. 14MFD
POWER SWITCH
PRESSURE SWITCH
DOOR SWITCH
POWER PROTECT RELAY
GEAR MOTOR PROTECT RELAY
LAMP
AGITATING MOTOR
DISPENSING MOTOR
SOLENOID
NOISE KILLER
TRANS.
FUSE (3A)
24V
18.3V
FUSE (0.5A)
WATER SWITCH
WATER VALVE
HEATER (THERMOSTAT)
DCM-TIMER
FLOATS SWITCH
VARIABLE RESISTER
X2-1 AND X2-2 ARE SHORTED ON AIR COOLED MODEL
THERMAL SWITCH
ICE SWITCH
CHANGE SWITCH
WATER CONTROL RELAY
BIN CONTROL SWITCH
ICE MAKING SWITCH

[DCM-700]

[g] Dispensing ice. (Bin Control still tripped.)

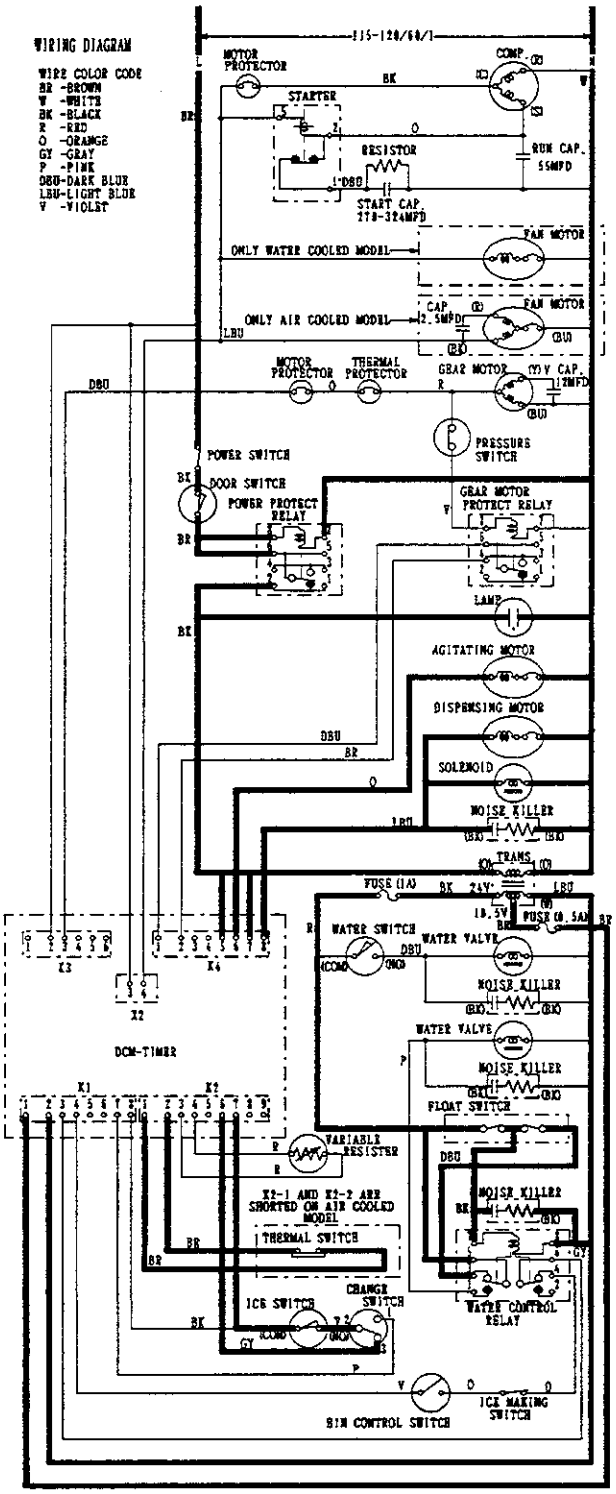

[DCM-450 - Step 1: Continuous dispensing.
(Agitating Motor operates for 0.6 sec. every 12 sec.)]

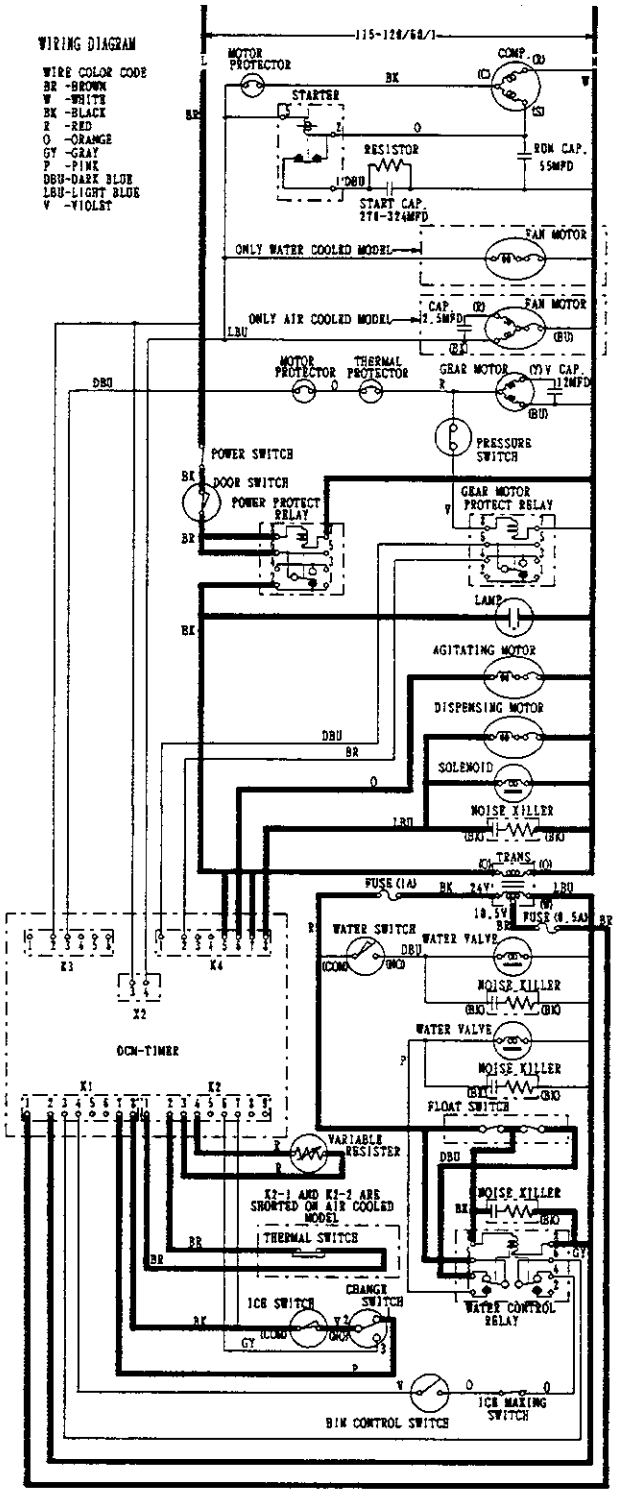

[DCM-450 - Step 2: Portion Control dispensing.
(Agitating Motor operates for 0.6 sec. just as Ice Switch is moved to "ON" position, and then for 0.6 sec. every 12 sec.)]

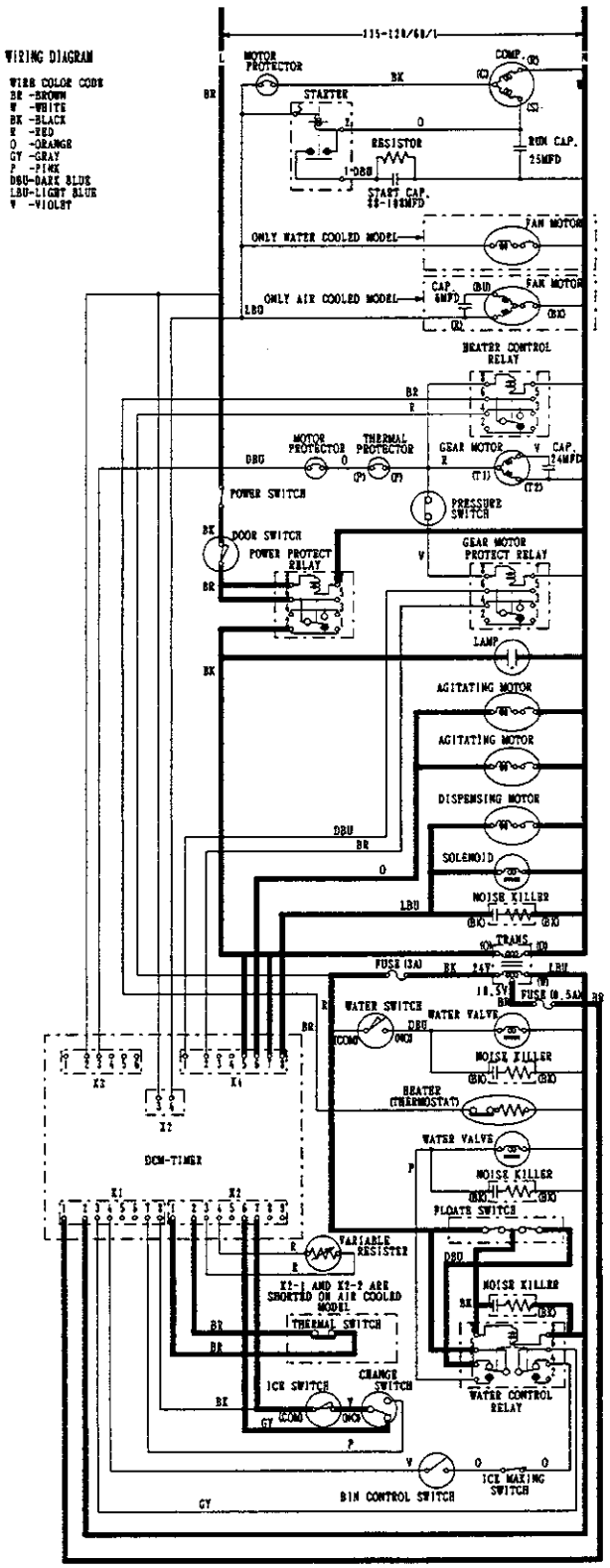

[DCM-700 - Step 1: Continuous dispensing.
(Agitating Motor operates for 0.6 sec. every 12 sec.)]

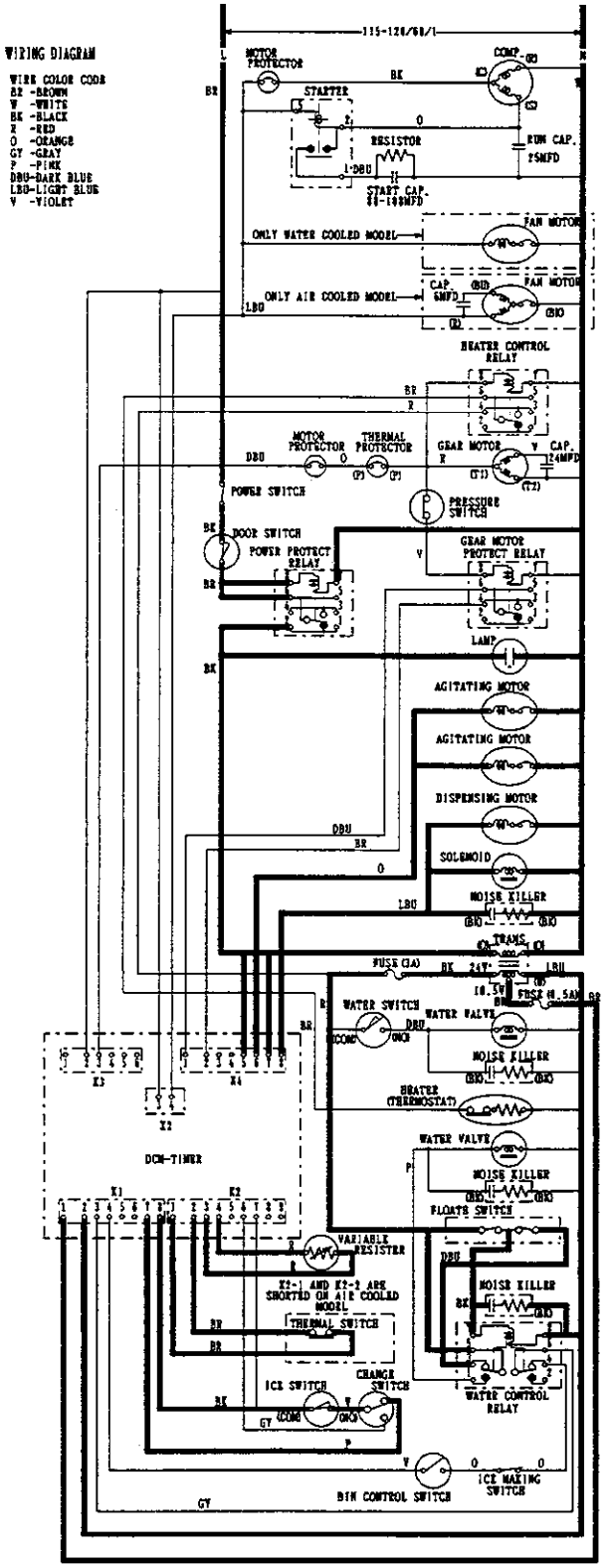

[DCM-700 - Step 2: Portion Control dispensing.
(Agitating Motor operates for 0.6 sec. just as Ice Switch is moved to "ON" position, and then for 0.6 sec. every 12 sec.)]

[h] Dispensing water. (Bin Control still tripped.)

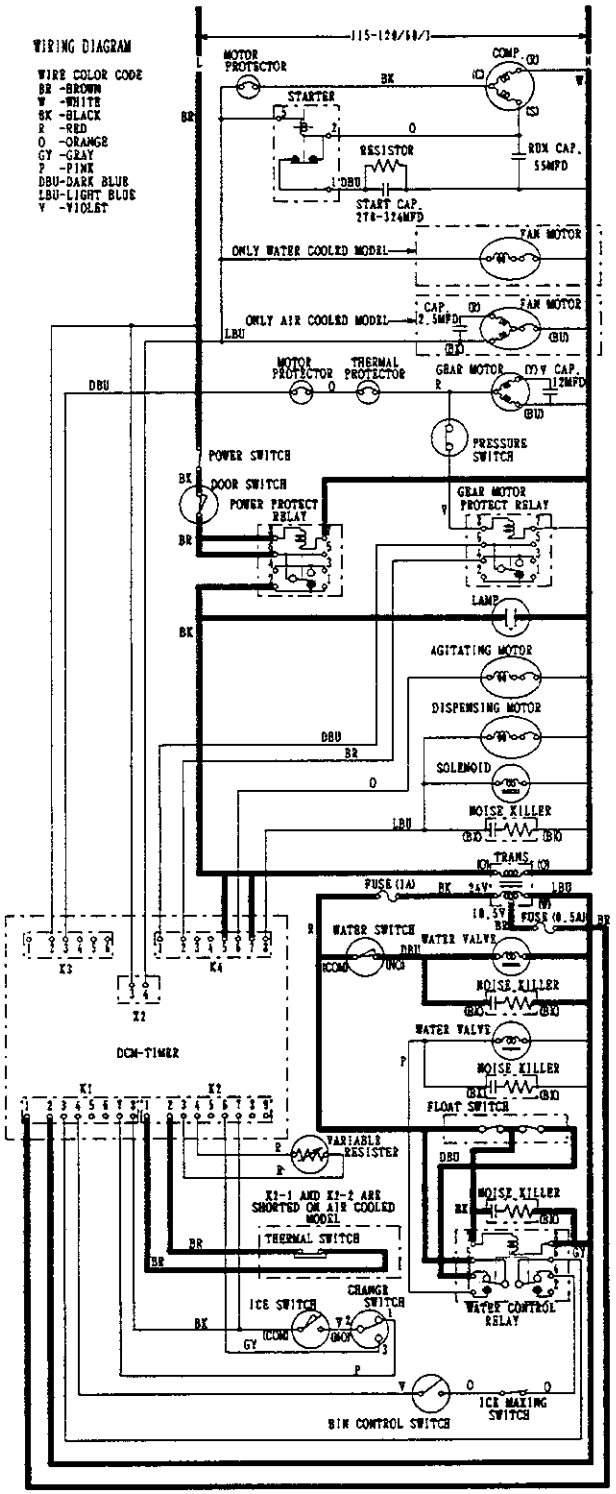

[DCM-450]

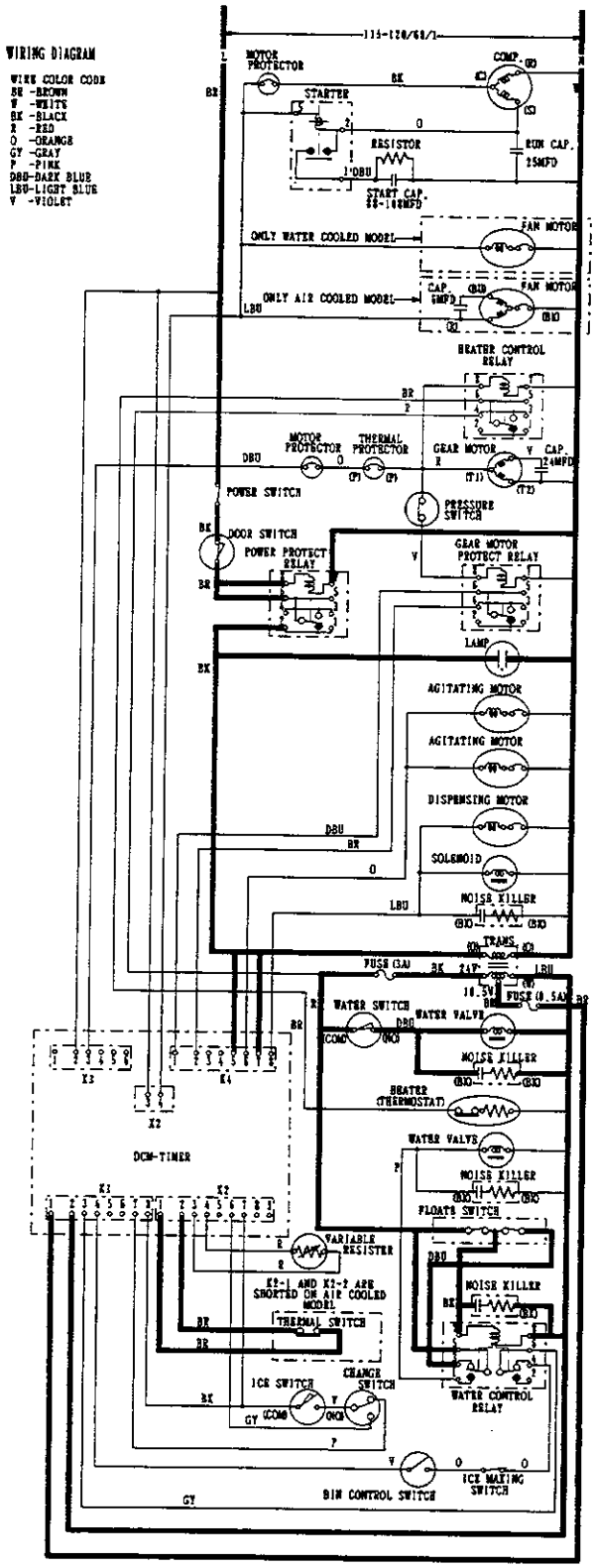
WIRING DIAGRAM
WIRE COLOR CODE
BR -BROWN
W -WHITE
BK -BLACK
R -RED
O -ORANGE
GY -GRAY
P -PINK
DBU-DARK BLUE
LBU-LIGHT BLUE
V -VIOLET
MOTOR PROTECTOR
COMP.
STARTER
RESISTOR
RUN CAP. 25MFD
START CAP. 88-108MFD
ONLY WATER COOLED MODEL
FAN MOTOR
ONLY AIR COOLED MODEL
CAP. 8MFD
HEATER CONTROL RELAY
MOTOR PROTECTOR
THERMAL PROTECTOR
GEAR MOTOR
CAP. 24MFD
POWER SWITCH
PRESSURE SWITCH
DOOR SWITCH
POWER PROTECT RELAY
GEAR MOTOR PROTECT RELAY
LAMP
AGITATING MOTOR
AGITATING MOTOR
DISPENSING MOTOR
SOLENOID
NOISE KILLER
TRANS.
FUSE (3A)
FUSE (0.5A)
WATER SWITCH
WATER VALVE
NOISE KILLER
HEATER (THERMOSTAT)
WATER VALVE
NOISE KILLER
FLOATS SWITCH
VARIABLE RESISTER
X2-1 AND X2-2 ARE SHORTED ON AIR COOLED MODEL
THERMAL SWITCH
NOISE KILLER
WATER CONTROL RELAY
ICE SWITCH
CHANGE SWITCH
BIN CONTROL SWITCH
ICE MAKING SWITCH
DCM-TIMER

[DCM-700]

[i] Low water.

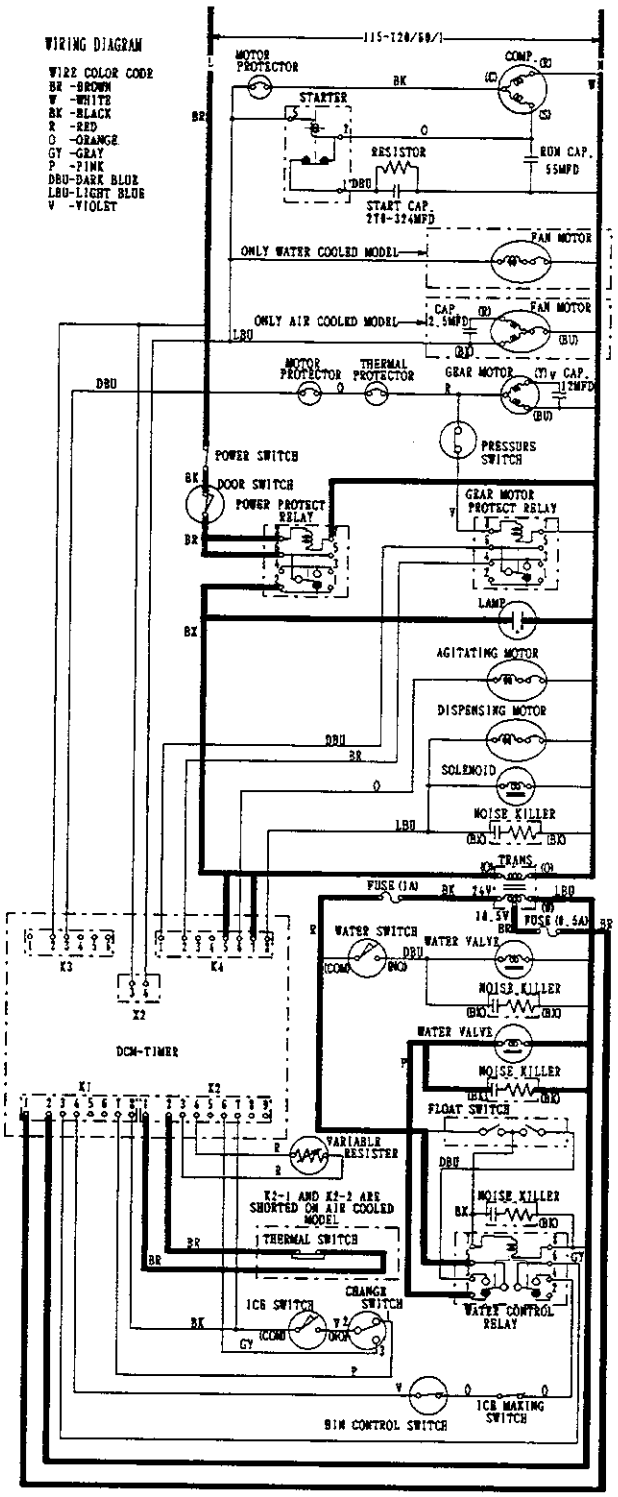

[DCM-450]

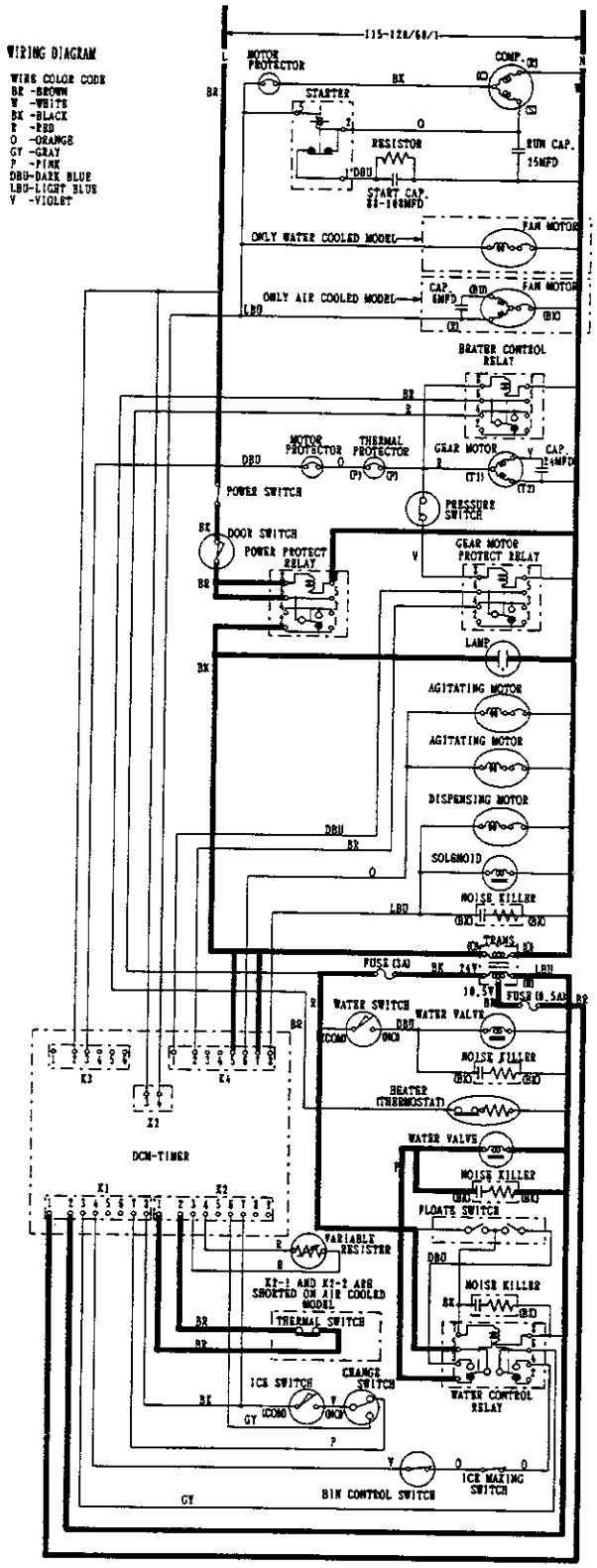
WIRING DIAGRAM
WIRE COLOR CODE
BR -BROWN
W -WHITE
BK -BLACK
R -RED
O -ORANGE
GY -GRAY
P -PINK
DBU-DARK BLUE
LBU-LIGHT BLUE
V -VIOLET
115-120/60/1
MOTOR PROTECTOR
COMP.
STARTER
RESISTOR
RUN CAP. 15MFD
START CAP. 88-108MFD
ONLY WATER COOLED MODEL
FAN MOTOR
ONLY AIR COOLED MODEL
CAP. 6MFD
HEATER CONTROL RELAY
MOTOR PROTECTOR
THERMAL PROTECTOR
GEAR MOTOR
CAP. 14MFD
POWER SWITCH
PRESSURE SWITCH
DOOR SWITCH
POWER PROTECT RELAY
GEAR MOTOR PROTECT RELAY
LAMP
AGITATING MOTOR
AGITATING MOTOR
DISPENSING MOTOR
SOLENOID
NOISE KILLER
TRANS.
FUSE (3A)
24V
10.5V
FUSE (0.5A)
WATER SWITCH
WATER VALVE
NOISE KILLER
HEATER (THERMOSTAT)
WATER VALVE
NOISE KILLER
FLOATS SWITCH
K3
K4
X2
DCM-TIMER
X1
X2
VARIABLE RESISTER
X2-1 AND X2-2 ARE SHORTED ON AIR COOLED MODEL
THERMAL SWITCH
NOISE KILLER
WATER CONTROL RELAY
ICE SWITCH
CHANGE SWITCH
BIN CONTROL SWITCH
ICE MAKING SWITCH

[DCM-700]

4. TIMING CHART

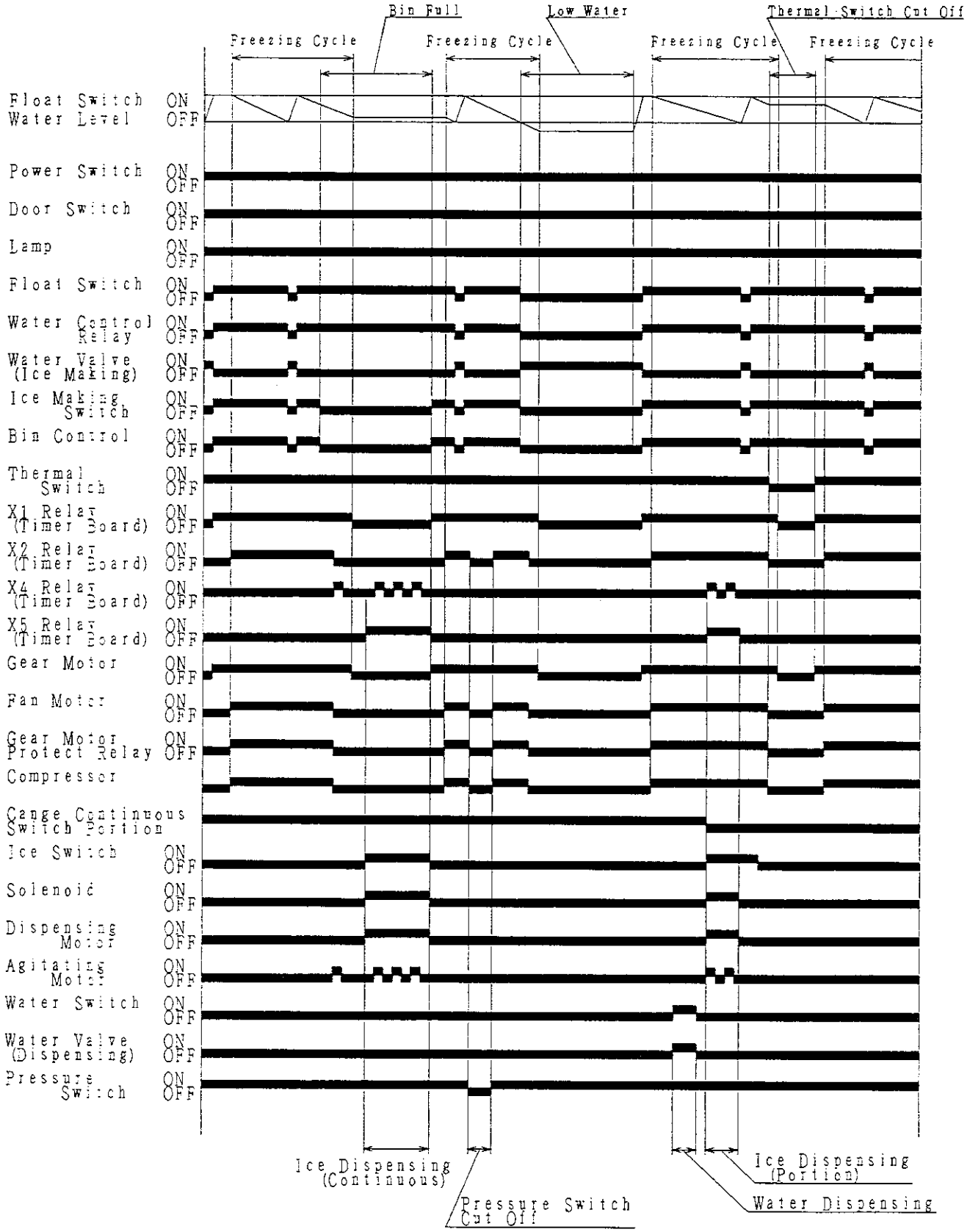

5. TIMER BOARD

[a] SOLID-STATE CONTROL

1) A HOSHIZAKI exclusive solid-state control is employed in DCM-450 and DCM-700 cubelet ice dispensers. This control includes a Micro Processor (LSI), developed by HOSHIZAKI.

2) A Printed Circuit Board (hereafter called "Timer Board") includes a stable and high-quality control system.

3) Any complicated adjustment is not required. All models are pretested and factory-adjusted.

[b] TIMER BOARD

CAUTION

1. Fragile, handle very carefully.

2. A timer board contains CMOS (Complementary Metal-Oxide Semiconductor) integrated circuits, which are susceptible to failure due to static discharge. It is especially important to use an anti-static wrist strap when handling or replacing the board.

3. Do not touch the electronic devices on the board or at the back of the board to prevent damage to the board.

4. Do not change wiring and connections. Especially, never misconnect K1, K2, K3 and K4.

5. Do not fix the electronic devices or parts on the board in the field. Always replace the whole board assembly when it goes bad.

A timer board, Part Code 2U0098-02 (Model H2AA086C03), is used for DCM-450 and DCM-700 cubelet ice dispensers.

Note: Be sure to use the proper Timer Board for the model that you are working on.

Connector K2
- #1,2 Thermal Switch
- #3,4 Variable Resistor
- #6,7 Ice Switch (continuous)

Connector K1
- #1,2 Power
- #3,4 Bin Controlled Circuit
- #7,8 Ice Switch (portion controlled)

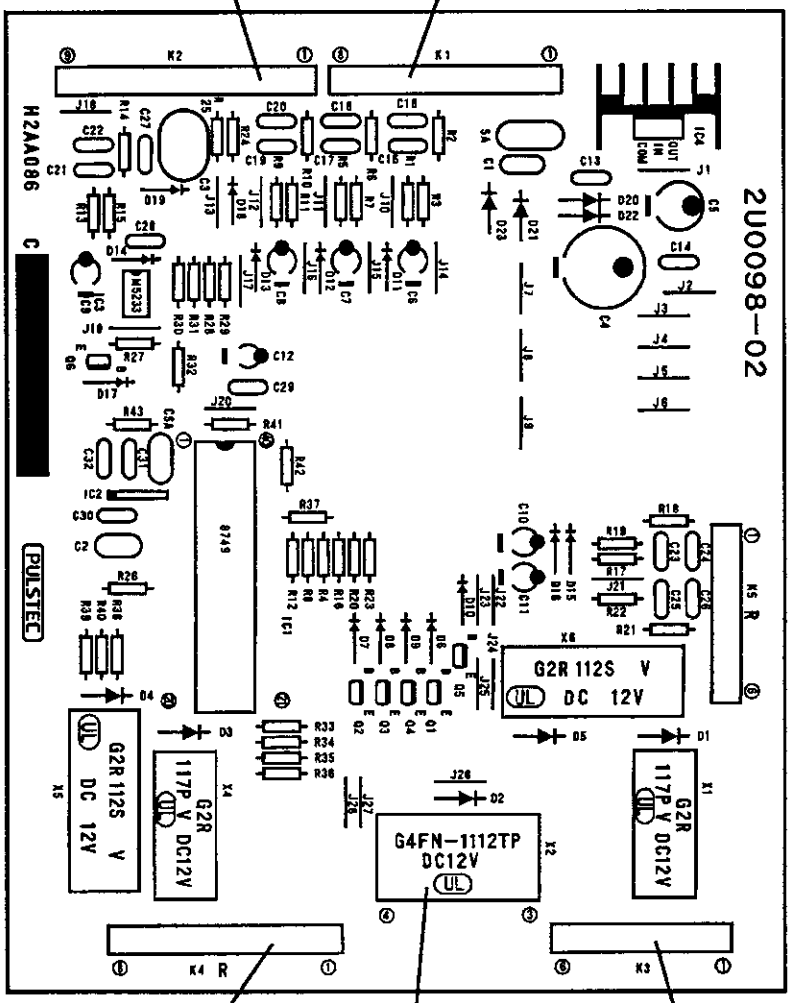

Connector K4
- #1,2 X2 Relay Coil
- #5,6 X4 Relay (Agitating Mot.)
- #7,8 X5 Relay (Dispensing Mot.) (Solenoid)

X2 Relay
- (Comp. Relay)
- (Fan Mot.)

Connector K3
- #2,3 X1 Relay (Gear Mot.)

[c] SEQUENCE

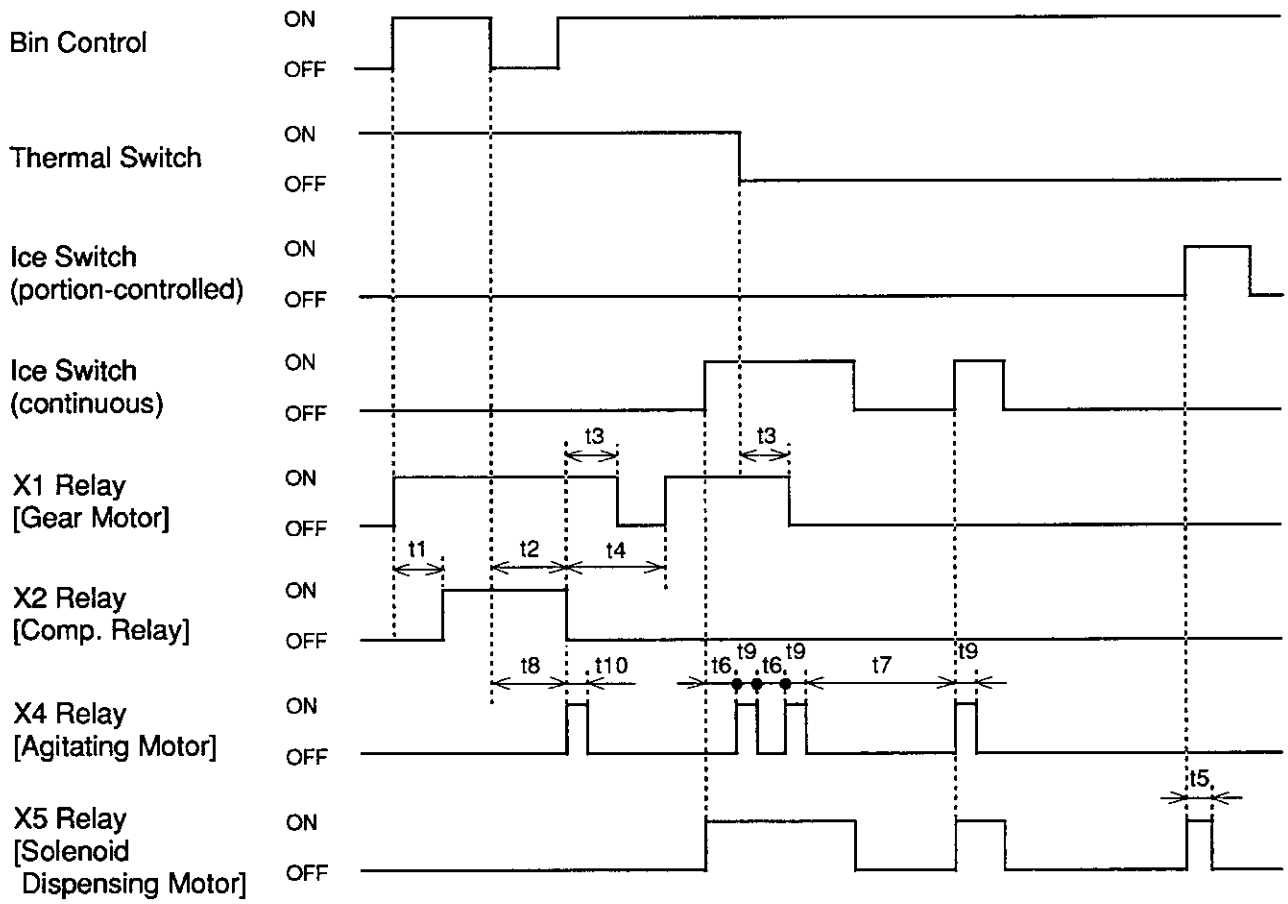

MARK	ITEM		TIME
t1	X2 Relay ON-delay Time		60 sec
t2	X2 Relay OFF-delay Time		90 sec
t3	X1 Relay OFF-delay Time		60 sec
t4	X1 Relay Restarting Delay Time		120 sec
t5	X5 Relay ON Time	Minimum	0.6 sec
		Maximum	20 sec
t6	X4 Relay Anti-restart Time		12 sec
t7	X4 Relay Anti-reset Time		20 min
t8	X4 Relay ON-delay Time		90 sec
t9	X4 Relay ON Time (after completing t6)		0.6 sec
t10	X4 Relay ON Time (after completing t8)		0.6 sec

Operating Instructions

1) X1
   * is made just as Bin Control Circuit is closed.
   * is released t3 sec. later than X2 is released after t2 sec. delay since Bin Control Circuit is opened.
   * is not made for t4 sec. after X2 is released, even if Bin Control Circuit is closed.

2) X2
   * is made t1 sec. after Bin Control Circuit is closed.
   * is released t2 sec. after Bin Control Circuit is opened.
   * is not made while Pressure Switch is off, regardless of Bin Control Circuit's being ON or OFF.

3) X4
   * is made for t10 sec. after t8 sec. delay since Bin Control Circuit is closed.
   * is made for t9 sec. after t6 sec. delay since X5 is made by closing Ice Switch (portion controlled) or Ice Switch (continuous).
   * is made just as X5 is made by closing Ice Switch (portion controlled) or Ice Switch (continuous), after t7 min. has passed since X4 is opened.

4) X5
   * is made for t5 sec. after Ice Switch (portion controlled) is closed.
   * is ON while Ice Switch (continuous) is ON.

6. PERFORMANCE DATA

DCM-450BAE

	Ambient Temp. (° F)	Water Temp. (° F) 50	70	90
APPROXIMATE ICE PRODUCTION PER 24 HR. (MAX. CUBE SIZE) lbs./day (kg/day)	70	* 494(224)	421(191)	392(178)
	80	463(210)	401(182)	370(168)
	90	425(193)	* 377(171)	342(155)
	100	359(163)	315(143)	293(133)
APPROXIMATE ELECTRIC CONSUMPTION watts	70	* 1100	-	-
	80	-	-	-
	90	-	* 1000	-
	100	-	-	-
APPROXIMATE WATER CONSUMPTION PER 24 HR. gal./day (ℓ/day)	70	59.2(224)	50.5(191)	47.0(178)
	80	55.5(210)	48.1(182)	44.4(168)
	90	51.0(193)	45.2(171)	40.9(155)
	100	43.1(163)	37.8(143)	35.1(133)
EVAPORATOR OUTLET TEMP. ° F (° C)	70	12.2(-11)	12.2(-11)	12.2(-11)
	80	14.0(-10)	14.0(-10)	14.0(-10)
	90	14.0(-10)	14.0(-10)	14.0(-10)
	100	14.0(-10)	14.0(-10)	14.0(-10)
HEAD PRESSURE PSIG (kg/cm²G)	70	183(12.9)	183(12.9)	183(12.9)
	80	214(15.0)	214(15.0)	214(15.0)
	90	245(17.2)	245(17.2)	245(17.2)
	100	276(19.4)	276(19.4)	276(19.4)
SUCTION PRESSURE PSIG (kg/cm²G)	70	24(1.7)	24(1.7)	24(1.7)
	80	26(1.8)	26(1.8)	27(1.9)
	90	27(1.9)	28(2.0)	28(2.0)
	100	28(2.0)	30(2.1)	31(2.2)
TOTAL HEAT OF REJECTION	9000 BTU/h (AT 90° / WT 70° F)			

Note: The data without *marks should be used for reference.

DCM-450BWE

	Ambient Temp. (° F)	Water Temp. (° F) 50	70	90
APPROXIMATE ICE PRODUCTION PER 24 HR. (MAX. CUBE SIZE) lbs./day (kg/day)	70	* 547(248)	516(234)	470(213)
	80	531(241)	505(229)	456(207)
	90	522(237)	* 481(218)	437(198)
	100	516(234)	478(217)	430(195)
APPROXIMATE ELECTRIC CONSUMPTION watts	70	* 1040	-	-
	80	-	-	-
	90	-	* 1026	-
	100	-	-	-
APPROXIMATE WATER CONSUMPTION PER 24 HR. gal./day (ℓ/day)	70	515(1948)	712(2694)	1284(4862)
	80	555(2101)	721(2729)	1369(5183)
	90	554(2097)	718(2718)	1367(5174)
	100	564(2134)	765(2897)	1471(5569)
EVAPORATOR OUTLET TEMP. ° F (° C)	70	6.8(-14)	6.8(-14)	6.8(-14)
	80	8.6(-13)	8.6(-13)	8.6(-13)
	90	8.6(-13)	8.6(-13)	8.6(-13)
	100	8.6(-13)	8.6(-13)	8.6(-13)
HEAD PRESSURE PSIG (kg/cm²G)	70	213(15.0)	213(15.0)	216(15.2)
	80	213(15.0)	213(15.0)	216(15.2)
	90	215(15.1)	213(15.0)	216(15.2)
	100	215(15.1)	215(15.1)	216(15.2)
SUCTION PRESSURE PSIG (kg/cm²G)	70	26(1.8)	26(1.8)	26(1.8)
	80	26(1.8)	26(1.8)	26(1.8)
	90	26(1.8)	26(1.8)	27(1.9)
	100	27(1.9)	27(1.9)	27(1.9)
HEAT OF REJECTION FROM CONDENSER		7750 BTU/h (AT 90° /WT 70° F)		
HEAT OF REJECTION FROM COMPRESSOR		1600 BTU/h (AT 90° /WT 70° F)		
WATER FLOW FOR CONDENSER		59 gal./h (AT 100° /WT 90° F)		
PRESSURE DROP OF COOLING WATER LINE		less than 7 PSIG		

Note: The data without *marks should be used for reference.

DCM-700BAE

	Ambient Temp. (° F)	Water Temp. (° F) 50	70	90
APPROXIMATE ICE PRODUCTION PER 24 HR. (MAX. CUBE SIZE) lbs./day (kg/day)	70	* 664(301)	631(286)	597(271)
	80	608(276)	582(264)	547(248)
	90	553(251)	* 547(248)	503(228)
	100	498(226)	478(217)	456(207)
APPROXIMATE ELECTRIC CONSUMPTION watts	70	* 1320	-	-
	80	-	-	-
	90	-	* 1390	-
	100	-	-	-
APPROXIMATE WATER CONSUMPTION PER 24 HR. gal./day (ℓ/day)	70	79.5(301)	75.6(286)	71.6(271)
	80	72.9(276)	69.7(264)	65.5(248)
	90	66.3(251)	65.5(248)	60.2(228)
	100	59.7(226)	57.3(217)	54.7(207)
EVAPORATOR OUTLET TEMP. ° F (° C)	70	14.0(-10)	14.0(-10)	15.8(-9)
	80	14.0(-10)	14.0(-10)	15.8(-9)
	90	15.8(-9)	15.8(-9)	17.6(-8)
	100	17.6(-8)	17.6(-8)	19.4(-7)
HEAD PRESSURE PSIG (kg/cm²G)	70	149(10.5)	152(10.7)	155(10.9)
	80	171(12.0)	176(12.4)	182(12.8)
	90	199(14.0)	201(14.1)	208(14.6)
	100	232(16.3)	233(16.4)	235(16.5)
SUCTION PRESSURE PSIG (kg/cm²G)	70	26(1.8)	26(1.8)	26(1.8)
	80	27(1.9)	27(1.9)	27(1.9)
	90	27(1.9)	30(2.1)	30(2.1)
	100	30(2.1)	31(2.2)	34(2.4)
TOTAL HEAT OF REJECTION	10500 BTU/h (AT 90° /WT 70° F)			

Note: The data without *marks should be used for reference.

DCM-700BWE

APPROXIMATE ICE PRODUCTION PER 24 HR. (MAX. CUBE SIZE)	Ambient Temp. (° F)	Water Temp. (° F) 50	70	90
lbs./day (kg/day)	70	* 631(286)	584(265)	534(242)
	80	617(280)	567(257)	514(233)
	90	602(273)	* 547(248)	496(225)
	100	591(268)	534(242)	478(217)
APPROXIMATE ELECTRIC CONSUMPTION watts	70	* 1340	-	-
	80	-	-	-
	90	-	* 1430	-
	100	-	-	-
APPROXIMATE WATER CONSUMPTION PER 24 HR. gal./day (m³/day)	70	416(1.57)	444(1.68)	827(3.13)
	80	420(1.59)	489(1.85)	914(3.46)
	90	423(1.60)	534(2.02)	1006(3.81)
	100	428(1.62)	579(2.19)	1094(4.14)
EVAPORATOR OUTLET TEMP. ° F (° C)	70	15.8(-9)	15.8(-9)	17.6(-8)
	80	15.8(-9)	15.8(-9)	17.6(-8)
	90	17.6(-8)	17.6(-8)	17.6(-8)
	100	17.6(-8)	17.6(-8)	17.6(-8)
HEAD PRESSURE PSIG (kg/cm²G)	70	212(14.9)	213(15.0)	215(15.1)
	80	213(15.0)	213(15.0)	215(15.1)
	90	213(15.0)	215(15.1)	215(15.1)
	100	213(15.0)	215(15.1)	216(15.2)
SUCTION PRESSURE PSIG (kg/cm²G)	70	26(1.8)	26(1.8)	26(1.8)
	80	27(1.9)	27(1.9)	27(1.9)
	90	27(1.9)	30(2.1)	30(2.1)
	100	30(2.1)	31(2.2)	33(2.3)
HEAT OF REJECTION FROM CONDENSER	9680 BTU/h (AT 90° /WT 70° F)			
HEAT OF REJECTION FROM COMPRESSOR	1450 BTU/h (AT 90° /WT 70° F)			
WATER FLOW FOR CONDENSER	46 gal./h (AT 100° /WT 90° F)			
PRESSURE DROP OF COOLING WATER LINE	less than 7 PSIG			

Note: The data without *marks should be used for reference.

HOSHIZAKI

CUBELET ICE DISPENSER

IV.

SERVICE INFORMATION

CONTENTS

PAGE

ADJUSTMENT OF COMPONENTS IV-1
1. ADJUSTMENT OF WATER REGULATING VALVE
- WATER-COOLED MODEL ONLY IV-1

SERVICE DIAGNOSIS IV-2

REMOVAL AND REPLACEMENT OF COMPONENTS IV-6
1. SERVICE FOR REFRIGERANT LINES IV-6
[a] REFRIGERANT RECOVERY IV-6
[b] EVACUATION AND RECHARGE IV-6
2. BRAZING IV-7
3. REMOVAL AND REPLACEMENT OF COMPRESSOR IV-7
4. REMOVAL AND REPLACEMENT OF DRIER IV-9
5. REMOVAL AND REPLACEMENT OF EXPANSION VALVE IV-10
6. REMOVAL AND REPLACEMENT OF WATER REGULATING VALVE
- WATER-COOLED MODEL ONLY IV-11
7. REMOVAL AND REPLACEMENT OF EVAPORATOR ASSEMBLY IV-12
8. REMOVAL AND REPLACEMENT OF FAN MOTOR IV-16
9. REMOVAL AND REPLACEMENT OF CONTROL/DISPENSING
WATER VALVE IV-16
10. REMOVAL AND REPLACEMENT OF FLOAT SWITCH IV-17
11. REMOVAL AND REPLACEMENT OF ELECTRICAL SYSTEM IV-18
[a] BIN CONTROL (PROXIMITY SWITCH) IV-18
[b] STARTER IV-18
12. REMOVAL AND REPLACEMENT OF DISPENSING SYSTEM IV-19
[a] AGITATOR IV-19
[b] AGITATING GEAR MOTOR IV-19
[c] DISPENSING AUGER IV-20

ADJUSTMENT OF COMPONENTS

1. ADJUSTMENT OF WATER REGULATING VALVE - WATER-COOLED MODEL ONLY

The Water Regulating Valve or also called "WATER REGULATOR" is factory-adjusted. No adjustment is required under normal use. Adjust the Water Regulator , if necessary, using the following procedures.

1) Attach a pressure gauge to the high-side line of the system. Or prepare a thermometer to check the condenser drain temperature.

2) Rotate the adjustment screw by using a flat blade screwdriver, so that the pressure gauge shows 215 PSIG, or the thermometer reads 100 - 104°F, in 5 minutes after the icemaking process starts. When the pressure exceeds 215 PSIG, or the condenser drain temperature exceeds 104°F, rotate the adjustment screw counterclockwise.

3) Check that the pressure or the condenser drain temperature holds a stable setting.

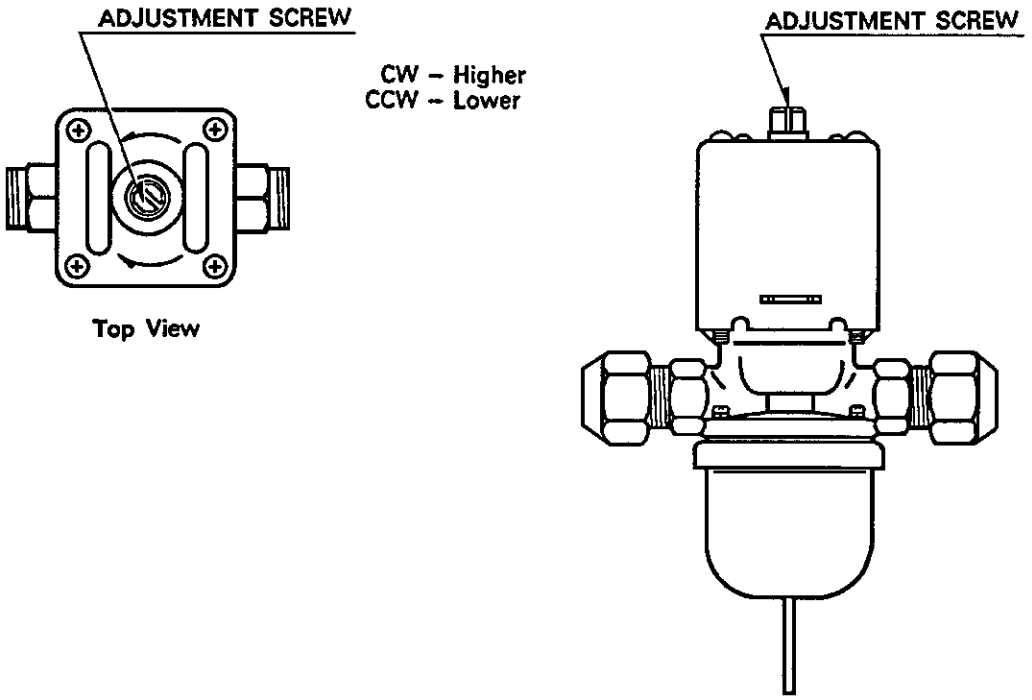

SERVICE DIAGNOSIS

PROBLEM	POSSIBLE CAUSE		REMEDY
[1] The ice dispenser will not start.	a) Power Supply	1. OFF position.	1. Move to ON position.
		2. Loose connections.	2. Tighten.
		3. Bad contacts.	3. Check for continuity and replace.
		4. Blown fuse.	4. Replace.
	b) Power Switch (Control Box)	1. OFF position.	1. Move to ON position.
		2. Bad contacts.	2. Check for continuity and replace.
	c) Fuse (Control Box)	1. Blown out.	1. Check for short-circuit and replace.
	d) Door Switch (Control Box)	1. Not activated.	1. Replace Upper Front Panel.
		2. Bad contacts.	2. Check for continuity and replace.
[2] Ice dispensing operates, but no ice is produced.	a) Water Control Relay	1. Bad contacts.	1. Check for continuity and replace.
		2. Coil winding opened.	2. Replace.
		3. Loose connections.	3. Tighten.
	b) Pressure Switch	1. Bad contacts.	1. Check for continuity and replace.
		2. Loose connections.	2. Tighten.
	c) Compressor	1. Does not start.	1. See "[4] Compressor will not start, or operates intermittently."
[3] Water Valve operates but no ice is produced.	a) Shut-off Valve	1. Closed.	1. Open.
		2. Water failure.	2. Wait till water is supplied.
	b) Water Valve	1. Clogged.	1. Clean. See "V. 2. [c] WATER VALVE."
	c) Bin Control	1. Tripped with bin filled with ice.	1. Remove ice.
		2. Out of position.	2. Place in position.
		3. Bad contacts.	3. Check for continuity and replace.
		4. Activator removed.	4. Place in position.
	d) Pressure Switch	1. Bad contacts.	1. Check for continuity and replace.
		2. Loose connections.	2. Tighten.
	e) Ice Making Switch	1. Bad contacts.	1. Check for continuity and replace.
		2. Loose connections.	2. Tighten.
	f) Compressor	1. Will not start.	1. See "[4] Compressor will not start, or operates intermittently."
[4] Compressor will not start, or operates intermittently.	a) Pressure Switch	1. Dirty Air Filter or Condenser.	1. Clean. See "V. 3. 3) Air Filter."
		2. Ambient or condenser water temperature too warm.	2. Get cooler.

PROBLEM	POSSIBLE CAUSE		REMEDY
		3. Refrigerant overcharged.	3. Recharge.
		4. Fan not operating.	4. See "[7] Fan Motor will not start, or is not operating."
		5. Refrigerant line or components plugged.	5. Clean and replace drier.
		6. Bad contacts.	6. Check for continuity and replace.
		7. Loose connections.	7. Tighten.
	b) Overload Protector	1. Bad contacts.	1. Check for continuity and replace.
		2. Voltage too low.	2. Get higher.
		3. Refrigerant overcharged.	3. Recharge.
	c) Starter	1. Bad contacts.	1. Check for continuity and replace.
		2. Coil winding opened.	2. Replace.
		3. Loose connections.	3. Tighten.
	d) Start Capacitor or Run Capacitor	1. Defective.	1. Replace.
	e) X2 Relay on Timer Board	1. Bad contacts.	1. Check for continuity and replace Timer Board.
		2. Coil winding opened.	2. Replace Timer Board.
	f) Compressor	1. Loose connections.	1. Tighten.
		2. Motor winding opened or grounded.	2. Replace.
	g) Fan Motor	1. Fan not rotating.	1. See "[7] Fan Motor will not start, or is not operating."
[5] Poor ice production capacity.	a) Condenser	1. Dirty Air Filter or Condenser.	1. See [4]-a).
		2. Bad ventilation.	2. Remove anything blocking vents.
	b) Expansion Valve	1. Low-side pressure or temperature exceeding the limit.	1. Secure the Bulb or replace the whole valve.
	c) Refrigerant Lines	1. Gas leaks.	1. Check for leaks with a leak detector. Reweld leak, replace drier and charge with refrigerant. The amount of refrigerant is marked on Nameplate.
	d) Installation Condition	1. Ambient temperature too high.	1. Check ventilation and location, and change as needed.
		2. Less than 6" clearance at rear and sides.	2. Allow proper clearance for ventilation.

PROBLEM	POSSIBLE CAUSE		REMEDY
	e) Inside Wall of Evaporator	1. Scale on inside wall of Freezing Cylinder.	1. Remove Auger. Use a solution of lime removing cleaner to clean periodically. If water is found to surpass the following levels, install a conditioner. Hardness 50 ppm Silica 30 ppm
	f) Water Supply	1. Water supply interrupted or pressure too low.	1. Check water supply.
[6] Dispenser will not stop even if Bin is filled with ice.	a) Bin Control	1. Activator does not move freely.	1. Check and replace.
		2. Contacts fused.	2. Replace.
[7] Fan motor will not start, or is not operating.	a) Fan Motor	1. Motor winding opened.	1. Replace.
		2. Bearing worn out.	2. Replace.
		3. Wiring to Fan Motor.	3. Check for loose connection or open, and replace.
		4. Defective Capacitor	4. Replace.
		5. Fan blade bound	5. Check and replace.
	b) X2 Relay on Timer Board	1. Bad contacts.	1. Check for continuity and replace Timer Board.
		2. Coil winding opened.	2. Replace Timer Board.
[8] Gear Motor (Ice Making) is not operating.	a) Gear Motor	1. Motor winding opened.	1. Replace.
	b) X1 Relay on Timer Board	1. Bad contacts.	1. Check for continuity and replace Timer Board.
		2. Coil winding opened.	2. Replace Timer Board.
	c) Gear Motor Capacitor	1. Defective.	1. Replace.
[9] Auger Shaft wear.	a) Water	1. Too much impurity.	1. If wear is excessive, replace.
[10] Abnormal noise	a) Fan Motor	1. Bearings worn out.	1. Replace.
		2. Fan blade deformed.	2. Replace fan blade.
		3. Fan blade does not move freely.	3. Replace.
	b) Compressor	1. Bearings worn out, or cylinder valve broken.	1. Replace.
		2. Mounting pad out of position.	2. Reinstall.
	c) Refrigerant Lines	1. Rub or touch lines or other surfaces.	1. Replace.
	d) Gear Motor (Ice Making)	1. Bearing or Gear wear/damage	1. Replace.
	e) Evaporator	1. Low-side pressure too low.	1. See [5]-b).

PROBLEM	POSSIBLE CAUSE		REMEDY
		2. Scale on inside wall of Freezing Cylinder.	2. See [5]-e).
	f) Agitator Motor Dispensing Motor	1. Bearing or Gear wear/damage	1. Replace.
	g) Solenoid (Shutter)	1. Wear.	1. Replace.
		2. Foreign matter on Plunger surface.	2. Clean.
	h) Water Valve	1. Foreign matter on Plunger.	1. Clean.
[11] Water does not stop.	a) Water Supply	1.Water pressure too high.	1. If pressure is consistently too high, install a pressure reducing valve.
	b) Water Valve	1. Diaphragm does not close.	1. Check for water leaks with icemaker OFF.
	c) Float Switch	1. Bad contacts.	1. Check for continuity and replace.
	d) Water Control Relay	1. Contacts fused.	1. Replace.
		2. Coil winding opened.	2. Replace.
[12] No water or poor flow.	a) Water Supply	1. Water failure or pressure too low.	1. Wait till water is supplied, or adjust the pressure range within 7 - 113 PSIG.
		2. Shut-off Valve closed or restricted.	2. Open.
	b) Water Valve	1. Clogged filter.	1. See [3]-b).
		2. Coil winding opened.	2. Replace.
	c) Float Switch	1. Contacts fused.	1. Replace.
		2. Clogged.	2. Clean.
	d) Water Control Relay	1. Bad contacts.	1. Check for continuity and replace.
[13] Much water drains from Evaporator's bottom.	a) Mechanical Seal (normally less than 0.017 fl. oz./h)	1. Dirt stuck on seal.	1. Clean.
		2. Seal wear.	2. Replace.
	b) O-ring	1. Scratched.	1. Replace.
[14] No ice is dispensed with Push Button pressed.	a) Ice Switch	1. Bad contacts.	1. Check for continuity and replace.
		2. Screws loosened.	2. Fasten.
	b) Solenoid (Shutter)	1. Coil winding opened.	1. Replace.
		2. Wear.	2. Replace.
		3. Something blocks Shutter plate.	3. Remove.
	c) Change Switch	1. Bad contacts.	1. Check for continuity and replace.
		2. Loose connections.	2. Tighten.
[15] Ice in storage bin often melts.	a) Bin Drain	1. Plugged.	1. Clean.

REMOVAL AND REPLACEMENT OF COMPONENTS

1. SERVICE FOR REFRIGERANT LINES

[a] REFRIGERANT RECOVERY

The icemaker unit is provided with a Refrigerant Access Valve on the low-side line. Install an Access Valve on the high-side line, if it has none. Recover the refrigerant from these two Access Valves, and store it in an approved container. Do not discharge the refrigerant into the atmosphere.

[b] EVACUATION AND RECHARGE

1) Attach Charging Hoses, a Service Manifold and a Vacuum Pump to the system.

2) Turn on the Vacuum Pump.

3) Allow the Vacuum Pump to pull down to a 29.9" Hg vacuum. Evacuating period depends on pump capacity.

4) Close the Low-side Valve on the Service Manifold.

5) Disconnect the Vacuum Pump, and attach a Refrigerant Service Cylinder to the low-side line. Remember to loosen the connection, and purge the air from the Hose. See the Nameplate for the required refrigerant charge. Hoshizaki recommends only virgin refrigerant or reclaimed refrigerant which meets ARI Standard No. 700-88 be used.

6) Open the Low-side Valve. Do not invert the Service Cylinder. A liquid charge will damage the Compressor.

7) Turn on the icemaker when charging speed gets slow. Turn off the icemaker when the Low-side Gauge shows approximately 0 PSIG. Do not run the icemaker at negative pressures. Close the Low-side Valve when the Service Cylinder gets empty.

8) Repeat the above steps 4) through 7), if necessary, until the required amount of refrigerant has entered the system.

9) Close the Refrigerant Access Valve, and disconnect the Hoses and Service Manifold.

10) Cap the Access Valve to prevent a possible leak.

2. BRAZING

DANGER

1. Refrigerant R-22 itself is not flammable, explosive and poisonous. However, when exposed to an open flame, R-22 creates Phosgene gas, hazardous in large amounts.
2. Always recover the refrigerant and store it in an approved container. Do not discharge the refrigerant into the atmosphere.
3. Do not use silver alloy or copper alloy containing Arsenic.
4. In its liquid state, the refrigerant can cause frostbite because of the low temperature.

3. REMOVAL AND REPLACEMENT OF COMPRESSOR

IMPORTANT

Always install a new Drier every time the sealed refrigeration system is opened. Do not replace the Drier until after all other repairs or replacement have been made.

1) Turn off the power supply, and remove the panels.

2) Remove the Terminal Cover on the Compressor, and disconnect the Compressor Wiring.

3) Recover the refrigerant and store it in an approved container.

4) Remove the Discharge, Suction and Access Pipes from the Compressor using brazing equipment.

WARNING

When repairing a refrigerant system, be careful not to let the burner flame contact the lead wires or insulation.

5) Remove the Bolts and Rubber Grommets.

6) Slide and remove the Compressor. Unpack the new Compressor package. Install the new Compressor.

7) Attach the Rubber Grommets of the prior Compressor.

8) Sandpaper the Discharge, Suction and Access Pipes.

9) Place the Compressor in position, and secure it using the Bolts.

10) Remove plugs from the Discharge, Suction and Access Pipes.

11) Braze the Access, Suction and Discharge lines (Do not change this order), while purging with nitrogen gas flowing at the pressure of 3 - 4 PSIG.

12) Install the new Drier.

13) Check for leaks using nitrogen gas (140 PSIG) and soap bubbles.

14) Evacuate the system, and charge it with refrigerant. See the Nameplate for the required refrigerant charge.

15) Connect the Terminals to the Compressor, and replace the Terminal Cover in its correct position.

16) Replace the panels in their correct position, and turn on the power supply.

4. REMOVAL AND REPLACEMENT OF DRIER

IMPORTANT

Always install a new Drier every time the sealed refrigeration system is opened. Do not replace the Drier until after all other repairs or replacement have been made.

1) Turn off the power supply, and remove the panels.

2) Recover the refrigerant and store it in an approved container.

3) Remove the Drier using brazing equipment.

4) Install the new Drier with the arrow on the Drier in the direction of the refrigerant flow. Use nitrogen gas at the pressure of 3 - 4 PSIG when brazing the tubings.

5) Check for leaks using nitrogen gas (140 PSIG) and soap bubbles.

6) Evacuate the system, and charge it with refrigerant. See the Nameplate for the required refrigerant charge.

7) Replace the panels in their correct position, and turn on the power supply.

5. REMOVAL AND REPLACEMENT OF EXPANSION VALVE

IMPORTANT

Sometimes moisture in the refrigerant circuit exceeds the Drier capacity and freezes up at the Expansion Valve. Always install a new Drier every time the sealed refrigeration system is opened. Do not replace the Drier until after all other repairs or replacement have been made.

1) Turn off the power supply, and remove the panels.

2) Recover the refrigerant and store it in an approved container.

3) Remove the Expansion Valve Bulb at the Evaporator outlet.

4) Remove the Expansion Valve Cover, and disconnect the Expansion Valve using brazing equipment.

5) Braze the new Expansion Valve with nitrogen gas flowing at the pressure of 3 - 4 PSIG.

WARNING

Always protect the valve body by using a damp cloth to prevent the valve from overheating. Do not braze with the valve body exceeding 250°F.

6) Install the new Drier.

7) Check for leaks using nitrogen gas (140 PSIG) and soap bubbles.

8) Evacuate the system, and charge it with refrigerant. See the Nameplate for the required refrigerant charge.

9) Attach the Bulb to the suction line. Be sure to secure the Bulb using a band and to insulate it.

10) Place the new set of Expansion Valve Covers in position.

11) Replace the panels in their correct position, and turn on the power supply.

6. REMOVAL AND REPLACEMENT OF WATER REGULATING VALVE - WATER-COOLED MODEL ONLY

IMPORTANT

Always install a new Drier every time the sealed refrigeration system is opened. Do not replace the Drier until after all other repairs or replacement have been made.

1) Turn off the power supply, remove the panels and close the Water Supply Line Shut-off Valve.

2) Recover the refrigerant and store it in an approved container.

3) Disconnect the Capillary Tube using brazing equipment.

4) Disconnect the Flare-connections of the valve.

5) Remove the screws and the valve from the Bracket.

6) Install the new valve, and braze the Capillary Tube.

7) Install the new Drier.

8) Check for leaks using nitrogen gas (140 PSIG) and soap bubbles.

9) Connect the Flare-connections.

10) Open the Water Supply Line Shut-off Valve, and turn on the power supply.

11) Check for water leaks.

12) Evacuate the system, and charge it with refrigerant. See the Nameplate for the required refrigerant charge.

13) See "IV. 1. ADJUSTMENT OF WATER REGULATING VALVE." If necessary, adjust the valve.

14) Replace the panels in their correct position.

7. REMOVAL AND REPLACEMENT OF EVAPORATOR ASSEMBLY

1) Turn off the power supply.

2) Remove the panels.

3) Open the Drain Valve to drain the Evaporator.

4) Remove the three Thumbscrews and take off the Chute Head from the Evaporator.

5) Remove the two Hexagon Head Bolts and take off the Evaporator Bracket from the Evaporator.

CUTTER

6) Remove the Bolt and lift off the Cutter.

7) Remove the Cylinder Gasket or the Rubber O-ring and the Nylon Ring at the top of the Evaporator.

EXTRUDING HEAD

8) Remove the three or four Socket Head Cap Screws and lift off the Extruding Head.

9) Replace the Bearing inside the Extruding Head, if it is worn or scratched.

Note: Replacing the Bearing needs a fitting tool. If it is not available, replace the whole Extruding Head.

AUGER

10) Lift off the Auger. If the area in contact with the Bearing is worn out or the Blade scratched, replace the Auger.

EVAPORATOR

Note: Skip the following steps 11) through 13) when the Evaporator does not need replacement.

11) Recover the refrigerant and store it in an approved container.

IMPORTANT

Always install a new Drier every time the sealed refrigeration system is opened. Do not replace the Drier until after all other repairs or replacement have been made.

12) Remove the Bulb of the Expansion Valve.

13) Disconnect the brazing-connections of the Expansion Valve and the Copper Tube - Low Side from the Evaporator, using brazing equipment.

14) Disconnect the three Hoses from the Evaporator.

15) Remove the four Socket Head Cap Screws securing the Evaporator with the Bearing-Lower.

16) Lift off the Evaporator.

BEARING-LOWER AND MECHANICAL SEAL

17) The Mechanical Seal consists of two parts. One moves along with the Auger, and the other is fixed on the Bearing-Lower. If the contact surfaces of these two parts are worn or scratched, the Mechanical Seal may cause water leaks and should be replaced.

18) Remove the O-ring on the Bearing-Lower.

19) Remove the four or six Bolts and the Bearing-Lower from the Gear Motor. Replace the Bearing inside the Bearing-Lower, if it is worn or scratched.

Note: Replacing the Bearing needs a fitting tool. If it is not available, replace the whole Extruding Head.

GEAR MOTOR

20) Remove the Coupling-Spline on the Gear Motor Shaft.

21) Remove the Terminal Cover of the Gear Motor and cut the Connectors.

22) Remove the three Socket Head Cap Screws securing the Gear Motor.

23) Assemble the removed parts in the reverse order of which they were removed.

WARNING

Be careful not to scratch the surface of the O-ring, or it may cause water leaks. Handle the Mechanical Seal with care not to scratch nor to contaminate its contact surface.

24) When replacing the Evaporator;

(a) Braze the new Evaporator with nitrogen gas flowing at the pressure of 3 - 4 PSIG.

(b) Replace the Drier.

(c) Check for leaks using nitrogen gas (140 PSIG) and soap bubbles.

(d) Evacuate the system, and charge it with refrigerant. See the Nameplate for required refrigerant charge.

25) Replace the panels in their correct position, and turn on the power supply.

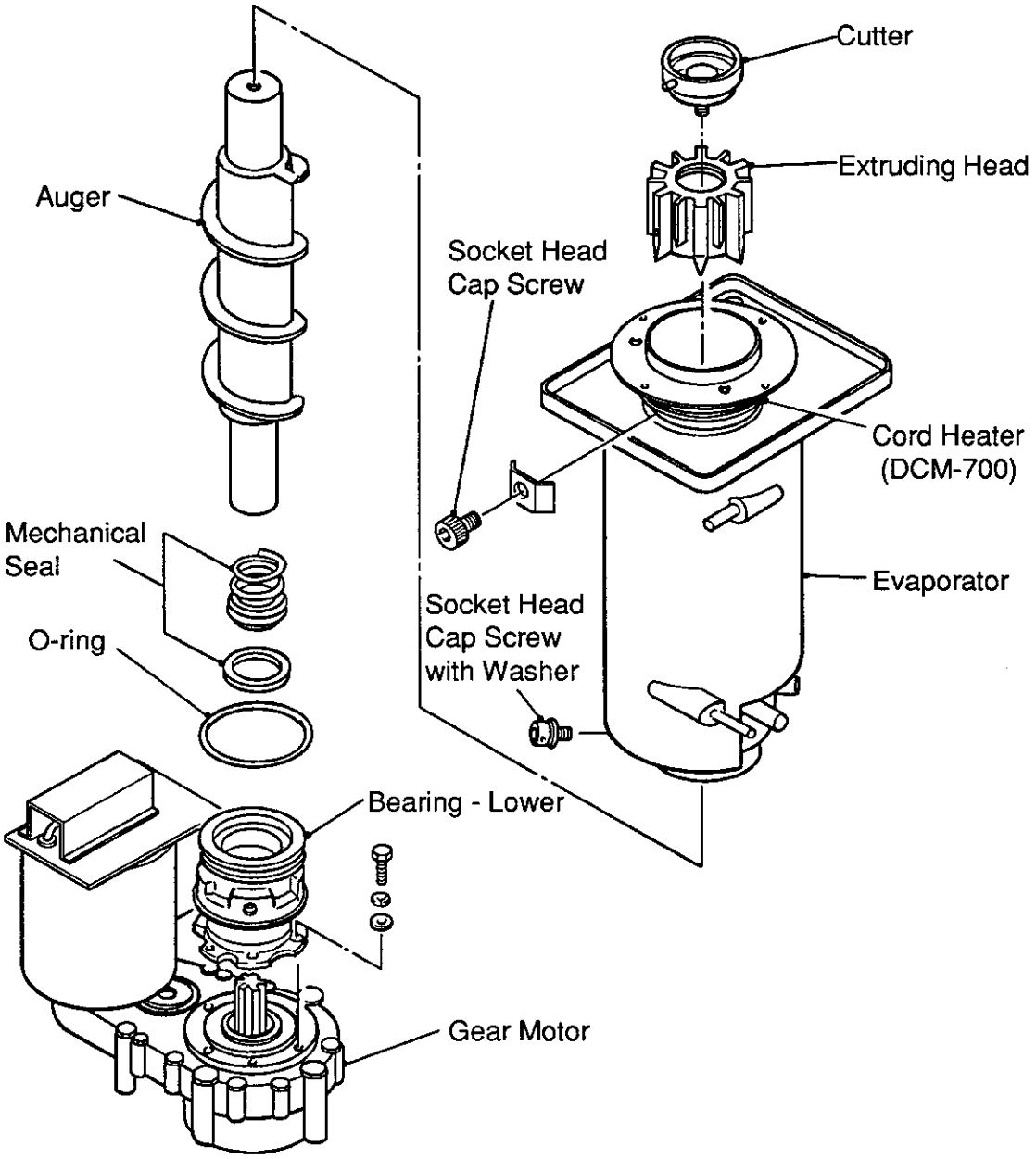
Cutter
Extruding Head
Auger
Socket Head
Cap Screw
Cord Heater
(DCM-700)
Mechanical
Seal
Evaporator
O-ring
Socket Head
Cap Screw
with Washer
Bearing - Lower
Gear Motor

8. REMOVAL AND REPLACEMENT OF FAN MOTOR

1) Turn off the power supply and remove the panels.

2) Remove the wire connectors from the Fan Motor leads.

3) Remove the Fan Motor Bracket and Fan Motor.

4) Install the new Fan Motor.

5) Replace the Fan Motor Bracket and the wire connectors.

6) Replace the panels in their correct position, and turn on the power supply.

9. REMOVAL AND REPLACEMENT OF CONTROL/DISPENSING WATER VALVE

1) Turn off the power supply, remove the panels and close the Water Supply Line Shut-off Valve.

2) Disconnect the Terminals from the Control/Dispensing Water Valve.

3) Loosen the Fitting Nut on the Control/Dispensing Water Valve Inlets, and remove the Control/Dispensing Water Valve. Do not lose the Packings inside the Fitting Nut.

4) Remove the Water Supply Hose or Water Pipe from the Control/Dispensing Water Valve.

5) Install the new Control/Dispensing Water Valve.

6) Assemble the removed parts in the reverse order of which they were removed.

7) Open the Water Supply Line Shut-off Valve.

8) Check for water leaks.

9) Replace the panels in their correct position, and turn on the power supply.

10. REMOVAL AND REPLACEMENT OF FLOAT SWITCH

WARNING

1. Fragile, handle very carefully.
2. If the Float Switch works poorly because of scale or other foreign matter, install a filter or softener in the water supply line.

1) Turn off the power supply.

2) Close the Water Supply Line Shut-off Valve.

3) Remove the panels.

4) Open the Drain Valve by rotating the knob, and after draining water, close the Drain Valve.

5) Cut the Float Switch leads at the wire connectors.

6) Turn and unfasten the flanged top, and remove the Float Switch.

7) Install a new Float Switch.

8) Assemble the removed parts in the reverse order of which they were removed.

9) Open the Water Supply Line Shut-off Valve.

10) Turn on the power supply.

11. REMOVAL AND REPLACEMENT OF ELECTRICAL SYSTEM

[a] BIN CONTROL (PROXIMITY SWITCH)

1) Turn off the power supply.

2) Remove the Front Panel and Top Panel.

   Note: The Proximity Switch is located on the outside of the Bin Top Panel.

3) Cut the leads at the wire connectors.

4) Remove the Switch Cover and the Proximity Switch.

5) Install the new Proximity Switch.

6) Replace the Switch Cover in its correct position.

7) Connect the leads of the Proximity Switch.

8) Turn on the power supply.

9) To check the Bin Control operation, move the paddle located on the inside of the Bin Top Panel. The Compressor should stop 90 sec. later, and the Gear Motor 150 sec. later.

10) Replace the panels in their correct position.

[b] STARTER

1) Turn off the power supply.

2) Remove the Front Panel.

3) Remove the Control Box Cover.

4) Disconnect the terminals from the Starter.

5) Remove the Starter.

6) Install the new Starter.

WARNING

The Starter is position-sensitive. Install it so that the arrow indication of the Starter can point upward. Failing to install it in this way will cause abnormal operation and adversely affect the Compressor operation as well.

7) Connect the terminals.

8) Assemble the removed parts in the reverse order of which they were removed.

9) Turn on the power supply.

12. REMOVAL AND REPLACEMENT OF DISPENSING SYSTEM

[a] AGITATOR

1) Turn off the power supply.

2) Remove the Front Panel.

3) Remove the Bin Front Panel.

4) Remove the Thumbscrews and pull off the Gear Motor Bracket.

   Note: Hold the Agitator not to drop it when pulling off the Gear Motor Bracket.

5) Replace the Agitator with the new one.

6) Assemble the removed parts in the reverse order of which they were removed.

7) Turn on the power supply.

[b] AGITATING GEAR MOTOR

1) Turn off the power supply.

2) Remove the Front Panel.

3) Remove the Bin Front Panel.

4) Remove the Thumbscrews and pull off the Gear Motor Bracket.

   Note: Hold the Agitator not to drop it when pulling off the Gear Motor Bracket.

5) Remove the Packing, three flat head screws and Plastic Guide.

6) Remove the four flat head screws and the Gear Motor.

7) Install the new Gear Motor.

8) Assemble the removed parts in the reverse order of which they were removed.

9) Turn on the power supply.

[c] DISPENSING AUGER

Same procedure as "[a] AGITATOR."

HOSHIZAKI

CUBELET ICE DISPENSER

V.

MAINTENANCE AND CLEANING INSTRUCTIONS

CONTENTS

PAGE

1. PREPARING THE ICEMAKER FOR LONG STORAGE V-1

2. CLEANING INSTRUCTIONS V-3
   [a] WATER SYSTEM V-3
   [b] STORAGE BIN V-4
   [c] WATER VALVE V-7
   [d] STRAINER V-8

3. MAINTENANCE V-10

1. PREPARING THE ICE DISPENSER FOR LONG STORAGE

WARNING

When shutting off the ice dispenser for an extended time, drain out all water from the water line and remove the ice from the Storage Bin. The Storage Bin should be cleaned and dried. Drain the ice dispenser to prevent damage to the water supply line at sub-freezing temperatures, using air or carbon dioxide. Shut off the ice dispenser until the proper ambient temperature is resumed.

[Air-cooled Models]

1) Run the ice dispenser with the Water Supply Line Shut-off Valve closed.

2) Open the Water Supply Line Drain Valve and blow out the water inlet line by using air pressure.

3) Move the Ice Making Switch at the bottom of the Middle Front Panel to the "OFF" position.

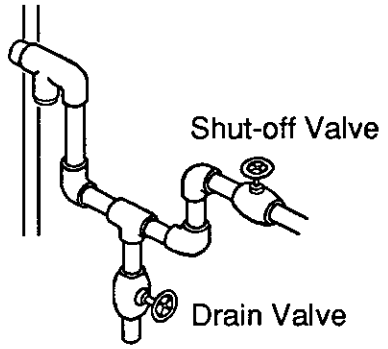

Fig. 1

4) Move the Change Switch at the bottom of the Middle Front Panel to the "CONTINUOUS" position.

5) Press the Push Button to dispense ice, and remove all ice from the Storage Bin.

6) Open the Drain Valve at the bottom of the Middle Front Panel.

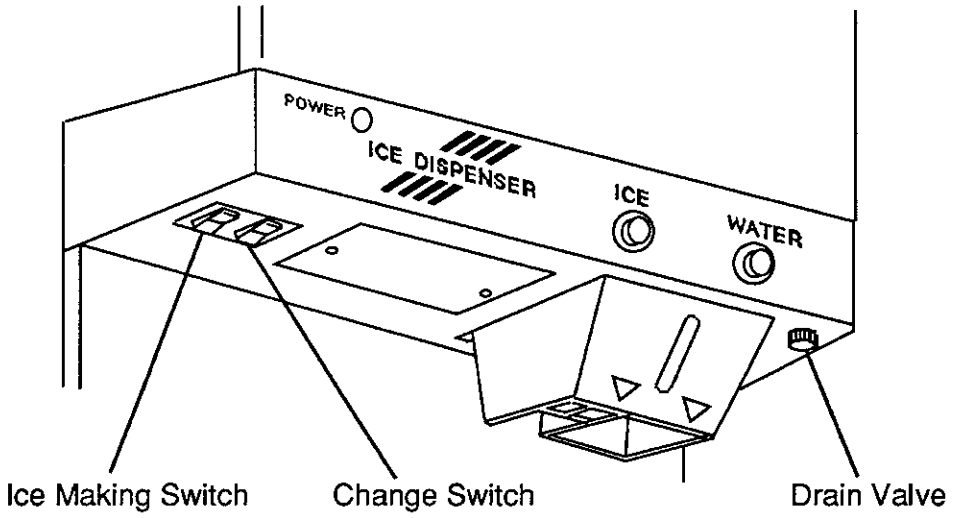

Fig. 2

7) Remove the Upper Front Panel.

8) Turn off the Power Switch.

9) Clean the Storage Bin. See "V. 2. [b] STORAGE BIN."

10) Replace the Upper Front Panel in its correct position, and close the Drain Valve at the bottom of the Middle Front Panel.

[Water-cooled Models]

1) Turn off the Power Switch and wait for 3 minutes.

2) Turn on the Power Switch and wait for 20 seconds.

3) Close the Water Supply Line Shut-off Valve.

4) Open the Water Supply Line Drain Valve and quickly blow the water supply line from the Drain Valve to drain the Condenser.

5) Follow the above steps 3) through 10) in [Air-cooled Models].

IMPORTANT

Before operating the dispenser next time, check that the Drain Valve at the bottom of the Middle Front Panel and the Water Supply Line Drain Valve are closed, and open the Water Supply Line Shut-off Valve.

Note: When shutting off the ice dispenser at sub-freezing temperatures, run the ice dispenser, with the Water Supply Line Shut-off Valve closed, and blow out the water inlet line, by using air pressure. See Fig. 3.

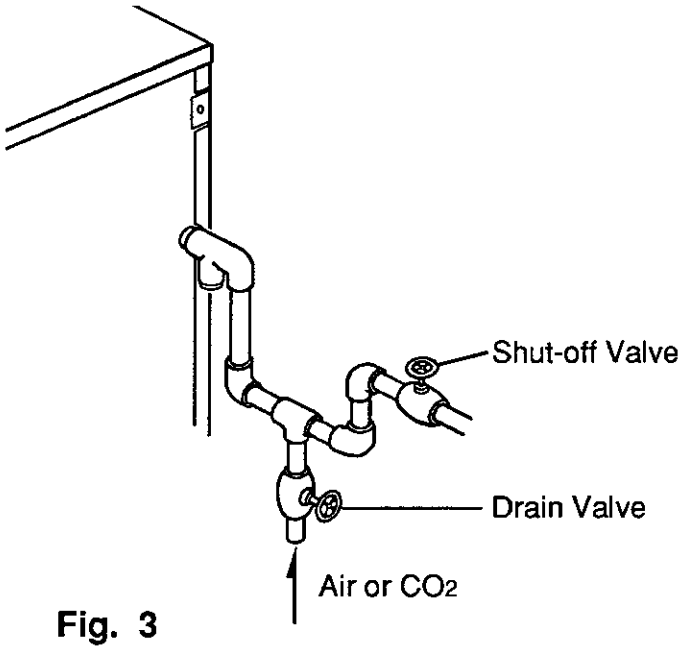

Fig. 3

2. CLEANING INSTRUCTIONS

[a] WATER SYSTEM

WARNING

1. Clean and sanitize the ice dispenser Water System at least twice a year, by using a recommended cleaner and sanitizer.
2. Do not use any ammonia type cleaners to prevent injury to individuals.
3. Always wear liquid-proof gloves for safe handling of the cleaning and sanitizing solution, to prevent irritation in case of contact with skin.

1) Close the Water Supply Line Shut-off Valve.

2) Dilute approximately 9.6 fl oz. of recommended cleaner, "LIME-A-WAY" manufactured by Economics Laboratory, Inc., with 1.6 gal of water.

3) Move the Change Switch, located at the left bottom of the Middle Front Panel, to the "CONTINUOUS" position.

4) Press the Push Button to dispense ice, and remove all ice from the Storage Bin.

5) Remove the Front Panel and the Top Panel, and turn off the Power Switch.

6) Open the Drain Valve, located at the bottom of the Middle Front Panel on the right side, to drain the water system.

7) Shut off the Drain Valve.

8) Remove the Water Valve above the Reservoir, and pour the cleaning solution by using a funnel. Be careful not to overflow.

9) Wait for 10 minutes before starting icemaking process. Then turn on the Power Switch. Run the ice dispenser until it stops automatically.

Note: This ice dispenser will not run without the Front Panel.
Place the Top Panel and the Front Panel.

10) Turn off the Power Switch and drain the water system. See 6) and 7).

11) Pour water into the Reservoir to rinse the cleaning solution, and drain the water system. See 6) and 7).

12) Dilute approximately 0.82 fl oz. of a 5.25 % Sodium Hypochlorite Solution with 1.6 gal of water.

13) Pour the sanitizing solution into the Reservoir. Be careful not to overflow.

14) Wait for 10 minutes before starting icemaking process, and turn on the Power Switch. Run the ice dispenser until it stops automatically.

15) Turn off the Power Switch and drain the water system. See 6) and 7).

16) Rinse out the sanitizing solution. See 11).

17) Replace the Water Valve, the Top Panel and the Front Panel in their correct position.

Note: Be sure to place the Water Valve Packing.

18) Open the Water Supply Line Shut-off Valve, turn on the Power Switch, and run the ice dispenser for about 30 minutes.

CAUTION

Do not use ice produced from the cleaning and sanitizing solution. Be sure none remains in the Storage Bin.

[b] STORAGE BIN - Following Cleaning Procedures for Water System

1) Remove the Front Cover of the Storage Bin.

2) Remove the thumbscrews first from the vertical plane and then from the horizontal plane of the Motor Brackets. Move the Agitating Motor(s) and the Dispensing Motor toward you. Then remove the Agitator(s) and the Dispensing Auger. See Fig. 4.

Note: DCM-700 series is provided with two Agitators, and DCM-450 series with one Agitator.

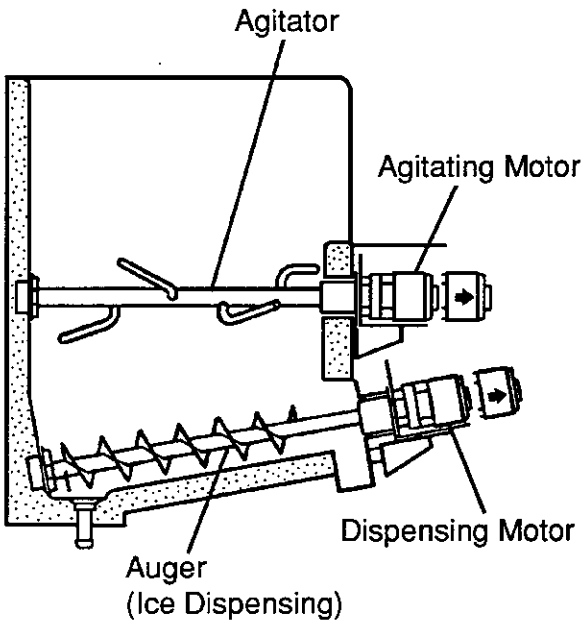

Fig. 4

3) Remove the Bin Control Bracket Assembly. See Fig. 5.

4) Remove the Snap Pin, the Shaft and the Activator.

5) Remove the thumbscrews, the Spout and the Packing. See Fig. 6. For DCM-700 series, remove the Ice Guide, Drain Pipe Holder and Drain Pipe in the Storage Bin as well.

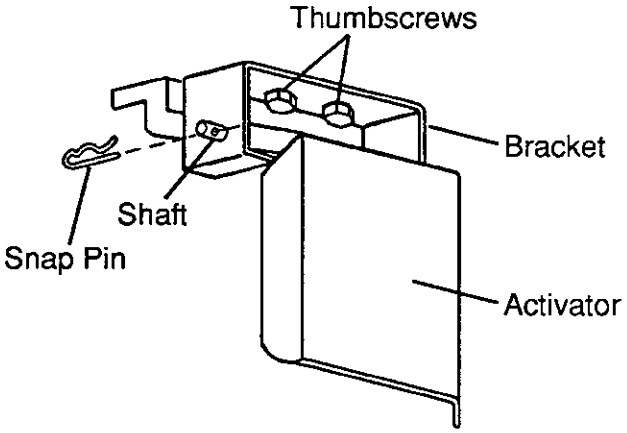

Fig. 5

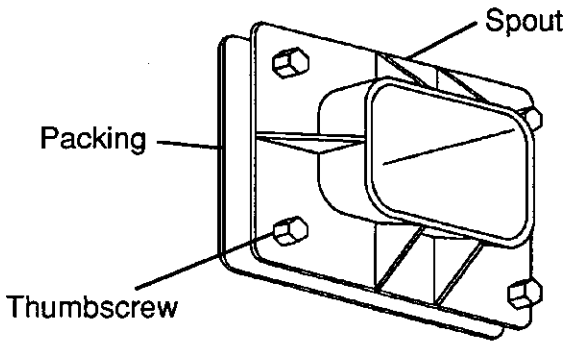

Fig. 6

6) Remove the Spout Cover and the black Ice Dispensing Spout and the Water Dispensing Nozzle. See Fig. 7.

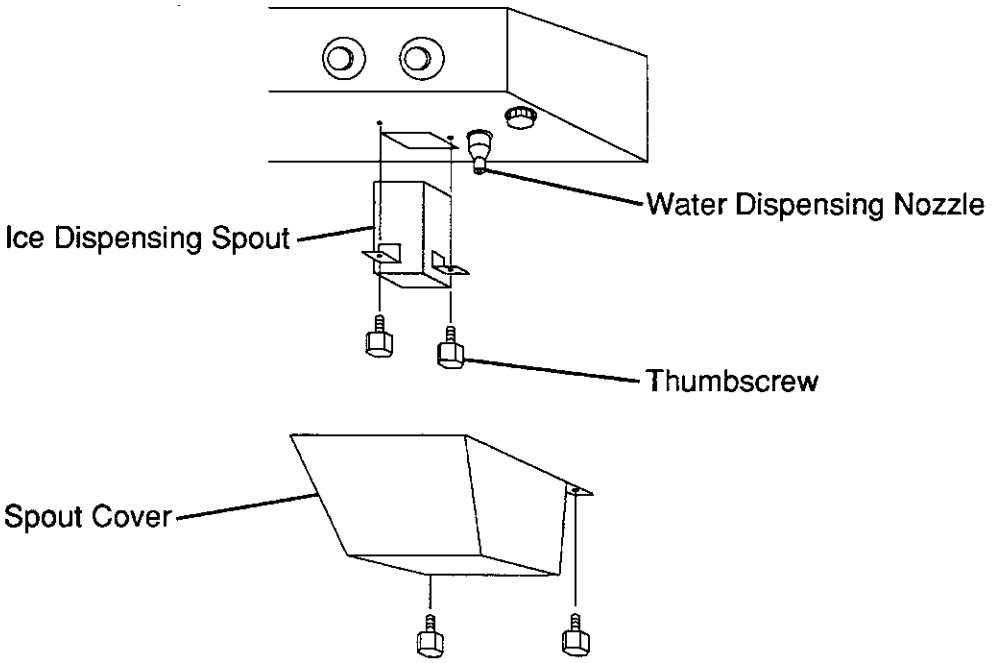

Fig. 7

7) Immerse the parts removed in the above steps 2) through 6) in the cleaning and sanitizing solution for about 15 minutes respectively.

8) Rinse these parts thoroughly with clean water.

9) Wipe thoroughly the Shutter located above the Ice Dispensing Spout.

10) Reassemble the Bin Control Bracket Assembly.

11) Replace the Dispensing Auger and Agitator, Bin Control Bracket Assembly, Spout, Packing, black Ice Dispensing Spout, Water Dispensing Nozzle and Spout Cover (for DCM-700 series, also the Ice Guide and the Drain Pipe) in their correct position.

12) Pour warm water into the Storage Bin to melt the ice produced from the cleaning and sanitizing solution.

13) Clean the storage bin liner, and rinse thoroughly.

14) Replace the Front Cover of the Storage Bin, the Top Panel and the Front Panel in their correct position.

[c] WATER VALVE

IMPORTANT

If the Filter in the Water Valve becomes clogged with sediment or dirt, the water supply will be stopped and ice cannot be made. Disassemble the Water Valve and clean out the Filter once every two months.

1) Turn off the power supply.

2) Close the Water Supply Line Shut-off Valve.

3) Remove the panels.

4) Remove the Fitting Nut from the Water Valve. Do not lose the Packing.

5) Remove the Filter from the Water Valve, remove sediment or dirt, and rinse it with water.

6) Replace the Filter on the Water Valve.

7) Replace the Packing and secure it carefully with the Fitting Nut to prevent leakage.

8) Open the Water Supply Line Shut-off Valve.

9) Turn on the power supply.

10) Check for water leaks.

11) Replace the panels in their correct position.

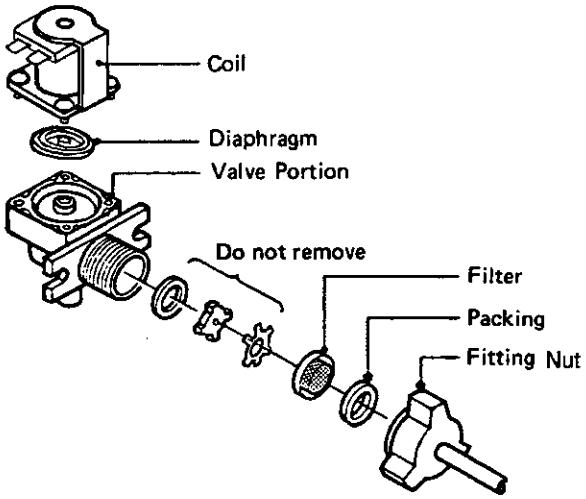

Fig. 8

[d] STRAINER (Optional Extra)

1) Necessary Parts

Strainer Part No. 311166A01 reg. number: 1 pc.

The above part has the following components:

PART NAME	PART NO.	QTY
Strainer Body	311156-01	1
Filter	415380G01	1
Strainer Cap	418587-01	1
Packing	418588-01	1
Joint	751BX0004	1

2) Installation Method

(1) Attach the Strainer in the water supply line so that the arrow indication can match the actual water flow direction. Install at a location where the Filter by the Strainer can be easily removed, since the Filter has to be cleaned from time to time.

(2) After attaching, check for water leaks at the connection.

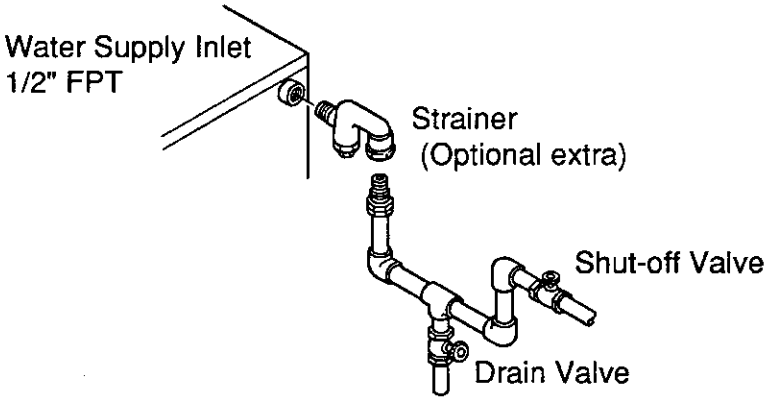

Fig. 9

3) Strainer Cleaning

IMPORTANT

A clogged Strainer will block water supply and cause no ice production. It should be cleaned from time to time.

(1) Turn off the power supply.

(2) Close the Water Supply Line Shut-off Valve.

(3) Open the Drain Valve and drain the water from the water supply line.

(4) Close the Drain Valve.

(5) Unscrew the Strainer Cap and remove the Filter inside.

(6) Use a nylon brush to clean the Filter of all grime, scale, and so on. Then rinse them thoroughly.

(7) Put the Filter back into the Strainer and secure it carefully with the Packing and the Strainer Cap.

(8) Open the Water Supply Line Shut-off Valve.

(9) Check for possible water leakage from the Strainer and Cap connections.

(10) Turn on the power supply.

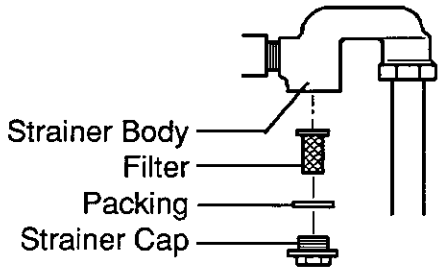

Fig. 10

3. MAINTENANCE

IMPORTANT

1. This ice dispenser must be maintained individually, referring to the instruction manual and labels provided with the ice dispenser.

2. To have the optimum performance of this ice dispenser, the following consumable parts need periodical inspection, maintenance and replacement:

   Extruding Head
   Housing
   Gear Motor
   Auger
   Mechanical Seal

   These parts should be inspected at least once a year or every 10,000 hours of operation. Their service life, however, depends on water quality and environment. More frequent inspection and maintenance are recommended.

   Consult with your local distributor about inspection and maintenance service. To obtain the name and phone number of your local distributor, call Hoshizaki Care at 1-800-233-1940.

1) Stainless Steel Exterior

To prevent corrosion, wipe the exterior occasionally with a clean and soft cloth. Use a damp cloth containing a neutral cleaner to wipe off oil or dirt build up.

2) Storage Bin

* The Storage Bin is for ice use only. Do not store anything else in the bin.

* Clean the bin liner using a neutral cleaner. Rinse thoroughly after cleaning.

3) Air Filter (Air-cooled model only) - See Fig. 11

A plastic mesh air filter removes dirt or dust from the air, and keeps the Condenser from getting clogged. As the filter gets clogged, the ice dispenser's performance will be reduced. Check the filter at least twice a month. When clogged, use warm water and a neutral cleaner to wash the filter.

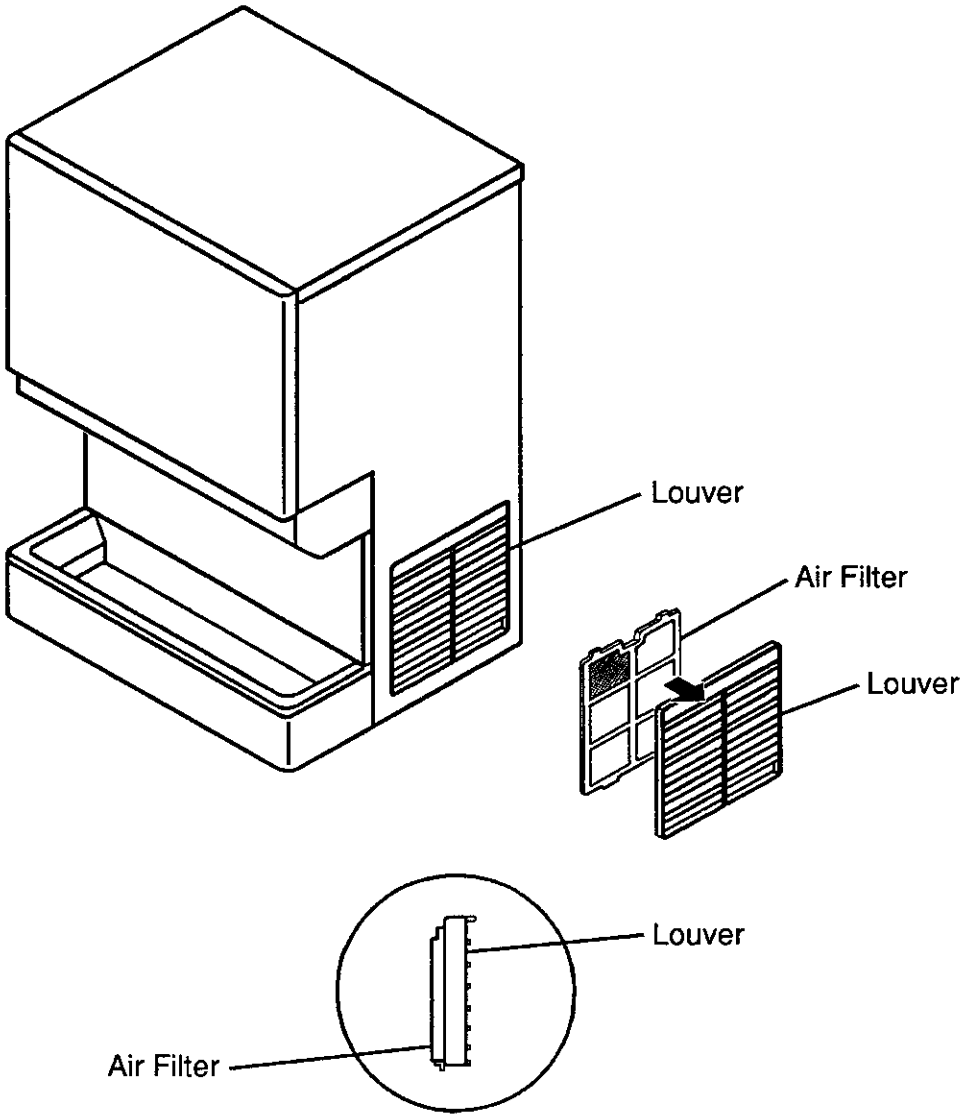

Fig. 11

4) Condenser (Air-cooled model only)

Check the Condenser once a year, and clean if required by using a brush or vacuum cleaner. More frequent cleaning may be required depending on the location of the ice dispenser.

5) Water System

Drain out all water from the Water System at least once a week.