S4 DIP SWITCH SETTINGS										
MODEL	1	2	3	4	5	6	7	8	9	10
DKM-500B..J	OFF						ON	OFF		

S5 DIP SWITCH SETTINGS					
MODEL	1	2	3	4	5
DKM-500B..J	OFF				ON

ABBR.	COMPONENT NAME
X10	PUMP DIRECTION RELAY
X11	X10 CONTROL RELAY
X12	ANTI-SLUSH RELAY
X13	ICE DISPENSE RELAY
CR	COMPRESSOR RELAY

CAPACITOR TABLE		
MODEL	START CAP.	RUN CAP.
DKM-500BAJ	243-292MFD	40MFD
DKM-500BWJ	-	35MFD

WIRE COLOR CODE

BK	BLACK
BR	BROWN
DBU	DARK BLUE
GR	GREEN
GY	GRAY
LBU	LIGHT BLUE
O	ORANGE
P	PINK
R	RED
V	VIOLET
W	WHITE
Y	YELLOW
W/BK	WHITE/BLACK
W/BR	WHITE/BROWN
W/BU	WHITE/BLUE
W/O	WHITE/ORANGE
W/R	WHITE/RED

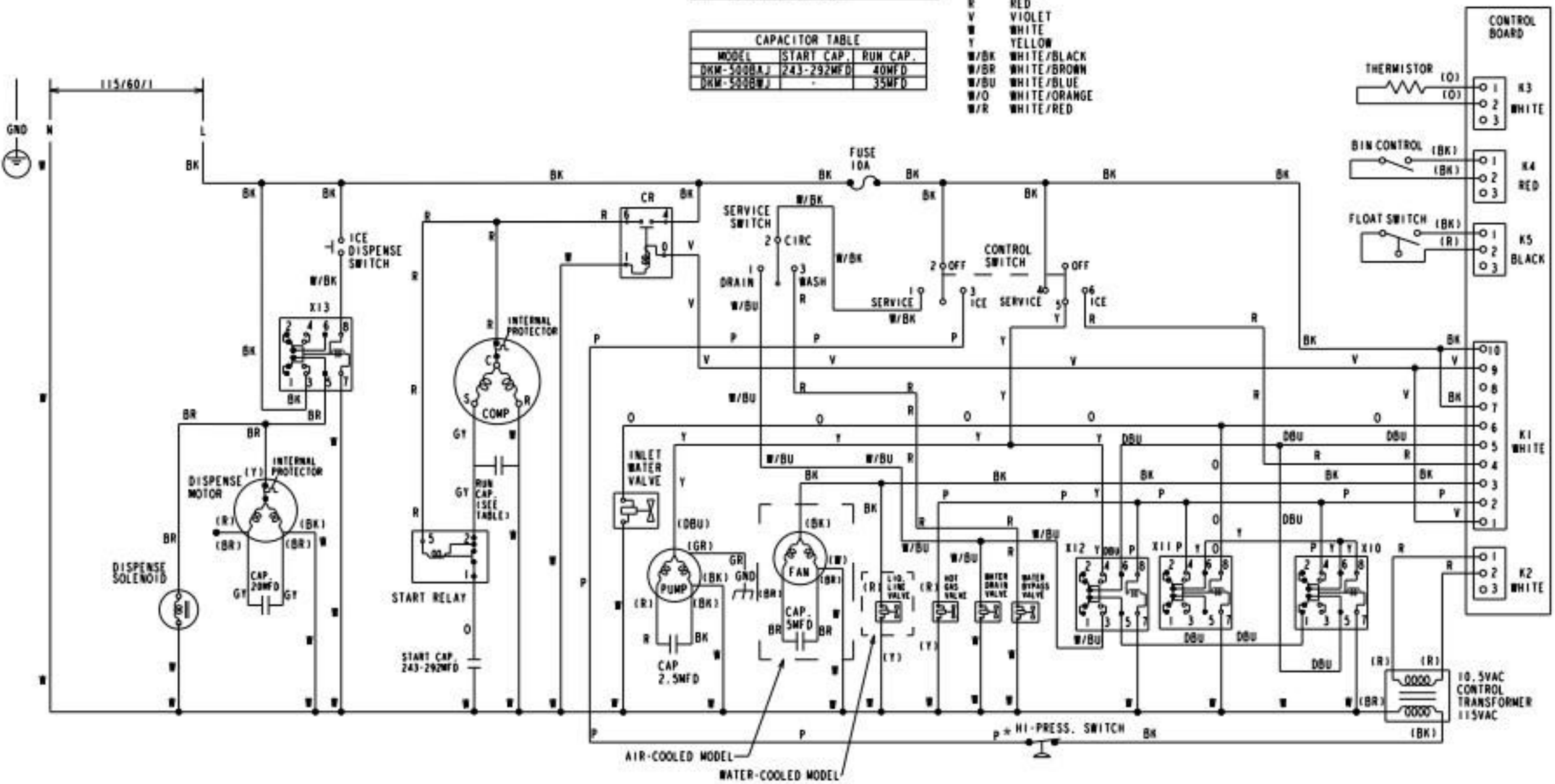

* High-Pressure Switch		
	Air-Cooled Model	Water-Cooled Model
Cut-out	$412\pm^{22}_{0}$ PSIG	$384\pm^{22}_{0}$ PSIG
Cut-in	327±22 PSIG	284±22 PSIG