NO.	71181
ISSUED:	NOV. 7, 2000
REVISED:	SEPT. 11, 2002

HOSHIZAKI AMERICA, INC.

HOSHIZAKI
MODULAR FLAKER

MODEL
F-1001MAF(-C)
F-1001MWF(-C)
F-1001MRF(-C)
F-1001MLF(-C)

(FINAL) PARTS LIST

F-1001MAF	K-0	OCT., 2000
	L-1	DEC., 2000
F-1001MAF-C	K-0	OCT., 2000
	L-1	DEC., 2000
F-1001MWF	K-0	OCT., 2000
	L-1	DEC., 2000
F-1001MWF-C	K-0	OCT., 2000
	L-1	DEC., 2000
F-1001MRF	K-0	OCT., 2000
	L-1	DEC., 2000
F-1001MRF-C	K-0	OCT., 2000
	L-1	DEC., 2000
F-1001MLF	K-0	OCT., 2000
	L-1	DEC., 2000
F-1001MLF-C	K-0	OCT., 2000
	L-1	DEC., 2000

MATERIAL ABBREVIATIONS

ALUMINUM

AL	=	Aluminum

COPPER

CU	=	Copper

PLASTIC

ABS	=	Acrylonitrile -butadiene - styrene
AC	=	Polyacetal
EVA	=	Ethylene vinyl acetate
PA	=	Polyamide = Nylon
PC	=	Polycarbonate
PE	=	Polyethylene
PES	=	Polyester
PETP	=	Polyethylene terephthalate = Tetlon
PP	=	Polypropylene
PS	=	Polystyrene
PIFE	=	Polytetrafluoroethylene = Teflon
PUR	=	Polyurethane
PVC	=	Polyvinyl chloride

RUBBER

VN	=	Vinyl Nitrile
EPDM	=	EP rubber
NBR	=	Nitrile butadiene rubber
NR	=	Natural rubber
NP	=	Neoprene
SI.R	=	Silicone rubber
SY.R	=	Synthetic rubber
EPH	=	Epichlorohydrin

STEEL

GS	=	Galvanized steel
SS	=	Stainless steel
PS	=	Plated steel
PAS	=	Primed steel

AUXILIARY CODE

Ex.1 K-0

- 0: Parts are the same as in the preceding year.
- K: "K" is the tenth in alphabetical order with "I" skipped. So, "K" indicates "2000".

Ex.2 L-0

- L: "L" is the next in alphabetical order. So, "L" indicates "2001".

Ex.3 L-1

- 1: Each time a part is changed (non-interchangeably) in a year, this number advances.

(Note) - = Part deleted.

x = Part deleted and replaced (interchangeably) by "o" part.

o = New part for "x" in the same auxiliary code.

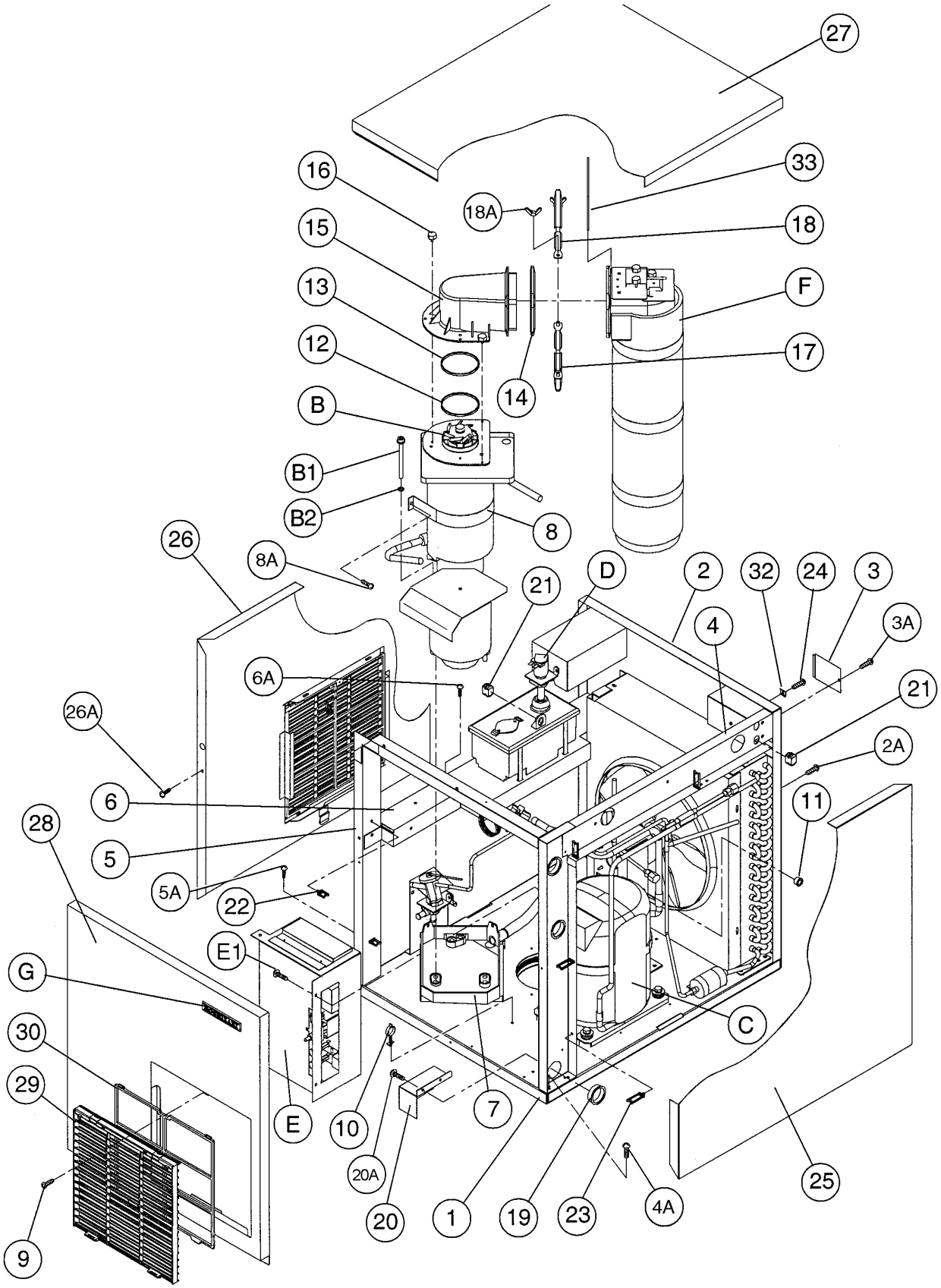
27
33
16
18A
18
15
F
13
17
12
14
B
B1
B2
8
26
8A
D
2
32
24
3
21
4
3A
6A
21
26A
2A
6
11
28
5
5A
22
E1
G
C
30
29
E
10
7
20A
20
1
19
23
4A
25
9

MODEL: **F-1001MAF**	TITLE: **A. ICE FLAKER ASSEMBLY**							
INDEX NO.	DESCRIPTION	MATERIAL OR MODEL NUMBER	PART NUMBER	REQUIRED NUMBER				
				K-0	L-1			
B	ICE MAKING UNIT	-	3A1600A01	1	1			
B1	SOCKET HEAD HEX BOLT	8X110, SS	7S12-0811	3	3			
B2	SPLIT LOCK WASHER	8, SS	7L22-0800	3	3			
C	REFRIGERATION UNIT	-	2A0969A03	1	1			
D	WATER CIRCUIT	HS-2025	2A1966A01	1	1			
E	CONTROL BOX ASSEMBLY	-	2A1045A01	1	-			
		-	2A1879A01		1			
E1	TRUSS HEAD SCREW		7C31-0408	3	3			
F	CHUTE ASSEMBLY	HS-2024	2A1705A04	1	1			
G	LABEL LOCATION	-	2A1849A01	1	1			

MODEL: **F-1001MAF-C**	TITLE: **A. ICE FLAKER ASSEMBLY**							
INDEX NO.	DESCRIPTION	MATERIAL OR MODEL NUMBER	PART NUMBER	REQUIRED NUMBER				
				K-0	L-1			
B	ICE MAKING UNIT	-	3A1600A02	1	1			
B1	SOCKET HEAD HEX BOLT	8X110, SS	7S12-0811	3	3			
B2	SPLIT LOCK WASHER	8, SS	7L22-0800	3	3			
C	REFRIGERATION UNIT	-	2A0969A03	1	1			
D	WATER CIRCUIT	HS-2025	2A1966A01	1	1			
E	CONTROL BOX ASSEMBLY	-	2A1045A01	1	-			
		-	2A1879A01		1			
E1	TRUSS HEAD SCREW		7C31-0408	3	3			
F	CHUTE ASSEMBLY	HS-2024	2A1705A04	1	1			
G	LABEL LOCATION	-	2A1849A05	1	1			

MODEL: F-1001MAF(-C)	TITLE: A. ICE FLAKER ASSEMBLY							
INDEX NO.	DESCRIPTION	MATERIAL OR MODEL NUMBER	PART NUMBER	REQUIRED NUMBER				
				K-0 L-1				
1	CHASSIS	GS	2A1176G04	1				
2	REAR PANEL	GS	2A1008G01	1				
2A	T2 SCREW	4X8	7P31-0408	4				
3	JUNCTION BOX COVER	GS	433410-01	1				
3A	T2 SCREW	4X8	7P31-0408	1				
4	SIDE FRAME (R)	GS	2A1545G01	1				
4A	TRUSS HEAD SCREW	4X8	7C31-0408	2				
5	FRONT FRAME	GS	3A1635G01	1				
6	RESERVOIR BRACKET	GS	2A1060-01	1				
6A	T2 SCREW	4X8	7P31-0408	4				
7	DRAIN PAN	ABS	323765G02	1				
8	STRAP	GS	4A1474-01	1				
8A	T3 SCREW	5X12	7G31-0512	2				
9	TAPPING SCREW - BLACK	STEEL,4X8	433954-01	2				
10	CLAMP	WS75-75-C	4A0337-12	3				
11	BUSHING	SB-562-7	420470-09	1				
12	RING	PA	432661-02	1				
13	“O” RING	G70	7616-G070	1				
14	PACKING-SPOUT	EPDM	321037-01	1				
15	SPOUT	PC	104797-01	1				
16	THUMBSCREW	SS,ABS	415949G04	5				
17	STRAP	SS	321038G02	1				
18	STRAP	SS	328703-02	1				
18A	WING NUT	6, SS	7E12-0600	2				
19	BUSHING	SB-1500-21	420470-06	3				
20	BARRIER	GS	4A0688-01	1				
20A	TRUSS HEAD SCREW	4X8	7C31-0408	2				
21	BUSHING	SR-30-1	420472-03	2				
22	WIRE SADDLE	LWS-2NS	4A0338-02	5				
23	WIRE SADDLE	LWS-4NS	4A0338-04	4				

MODEL: **F-1001MAF(-C)**	TITLE: **A. ICE FLAKER ASSEMBLY**							
INDEX NO.	DESCRIPTION	MATERIAL OR MODEL NUMBER	PART NUMBER	REQUIRED NUMBER				
				K-0 L-1				
24	SCREW-GROUNDING	BRASS	433304-02	1				
25	SIDE PANEL (RIGHT)	SS	2A1845G01	1				
25A	TRUSS HEAD SCREW	4X8, SS	7C32-0408	1				
26	SIDE PANEL (LEFT)	SS	2A1846G02	1				
26A	TRUSS HEAD SCREW	4X8, SS	7C32-0408	1				
27	TOP PANEL	SS	2A1051-02	1				
28	FRONT PANEL	SS	2A1848-01	1				
29	LOUVER (B)	PP	103121-03	2				
30	AIR FILTER (B)	-	208283G03	2				
31	CABLE TIE	CV-150	7920-0003	1				
32	SQUARE WASHER	BRASS	433537-02	1				
33	BRACKET-CHUTE	SS	4A1712-01	1				

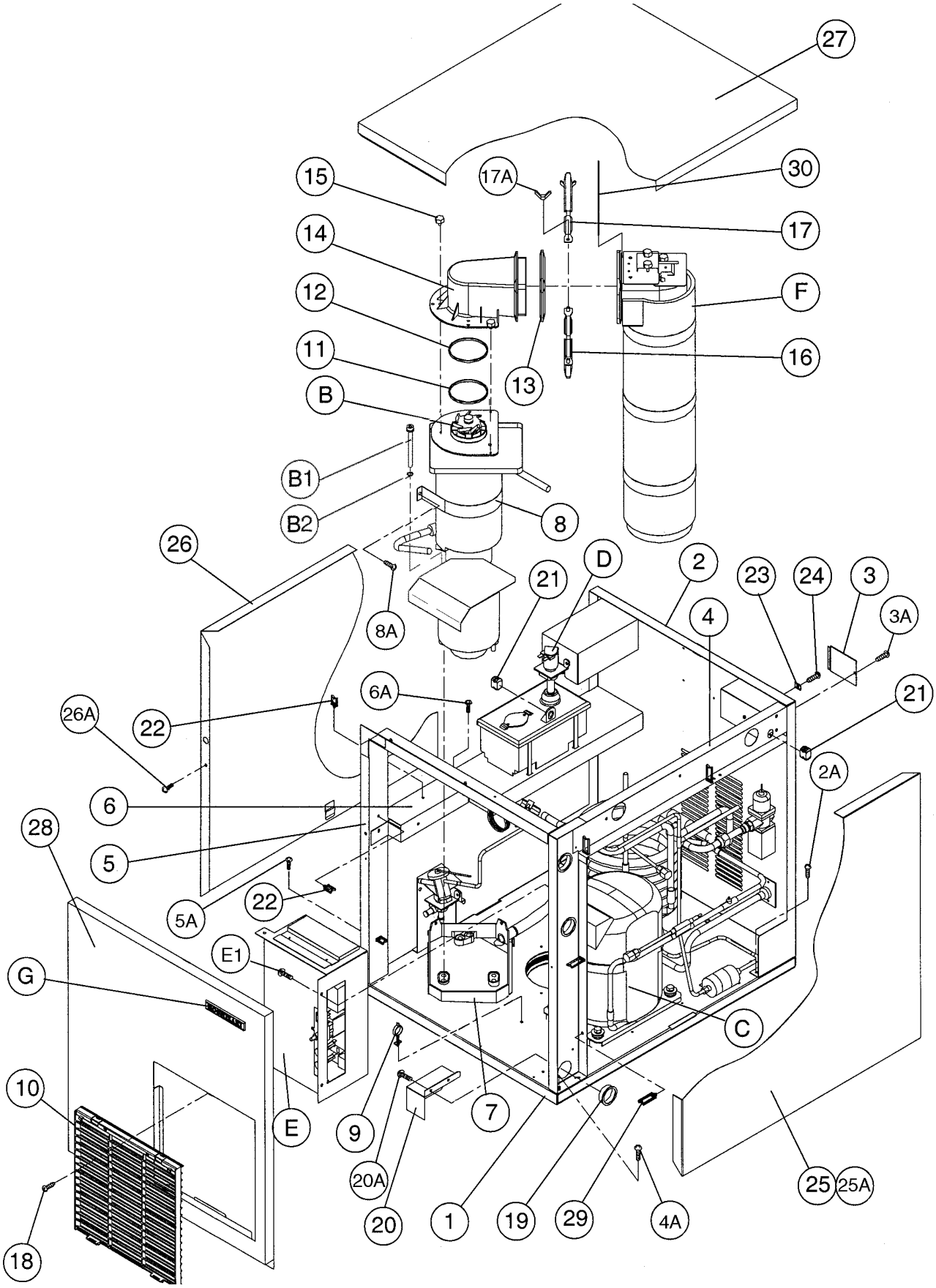
27
30
17A
15
17
14
F
12
16
11
13
B
B1
B2
8
26
D
2
23
24
3
21
4
3A
8A
6A
21
26A
22
2A
6
28
5
22
5A
E1
G
C
10
E
9
7
20A
20
1
19
29
4A
25
25A
18

MODEL: **F-1001MWF**	TITLE: **A. ICE FLAKER ASSEMBLY**							
INDEX NO.	DESCRIPTION	MATERIAL OR MODEL NUMBER	PART NUMBER	REQUIRED NUMBER				
				K-0	L-1			
B	ICE MAKING UNIT	-	3A1600A01	1	1			
B1	SOCKET HEAD HEX BOLT	8X110, SS	7S12-0811	3	3			
B2	SPLIT LOCK WASHER	8, SS	7L22-0800	3	3			
C	REFRIGERATION UNIT	-	2A1021A03	1	1			
D	WATER CIRCUIT	HS-2025	2A1966A01	1	1			
E	CONTROL BOX ASSEMBLY	-	2A1045A02	1	-			
		-	2A1878A01		1			
E1	TRUSS HEAD SCREW	4X8	7C31-0408	3	3			
F	CHUTE ASSEMBLY	HS-2024	2A1705A04	1	1			
G	LABEL LOCATION	-	2A1849A02	1	1			

MODEL: **F-1001MWF-C**	TITLE: **A. ICE FLAKER ASSEMBLY**							
INDEX NO.	DESCRIPTION	MATERIAL OR MODEL NUMBER	PART NUMBER	REQUIRED NUMBER				
				K-0	L-1			
B	ICE MAKING UNIT	-	3A1600A02	1	1			
B1	SOCKET HEAD HEX BOLT	8X110, SS	7S12-0811	3	3			
B2	SPLIT LOCK WASHER	8, SS	7L22-0800	3	3			
C	REFRIGERATION UNIT	-	2A1021A03	1	1			
D	WATER CIRCUIT	HS-2025	2A1966A01	1	1			
E	CONTROL BOX ASSEMBLY	-	2A1045A02	1	-			
		-	2A1878A01		1			
E1	TRUSS HEAD SCREW	4X8	7C31-0408	3	3			
F	CHUTE ASSEMBLY	HS-2024	2A1705A04	1	1			
G	LABEL LOCATION	-	2A1849A06	1	1			

MODEL: **F-1001MWF(-C)**	TITLE: **A. ICE FLAKER ASSEMBLY**								
INDEX NO.	DESCRIPTION	MATERIAL OR MODEL NUMBER	PART NUMBER	REQUIRED NUMBER					
				K-0 L-1					
1	CHASSIS	GS	2A1176G04	1					
2	REAR PANEL	GS	2A1836G01	1					
2A	T2 SCREW	4X8	7P31-0408	4					
3	JUNCTION BOX COVER	GS	433410-01	1					
3A	T2 SCREW	4X8	7P31-0408	1					
4	SIDE FRAME (R)	GS	2A1545G01	1					
4A	TRUSS HEAD SCREW	4X8	7C31-0408	2					
5	FRONT FRAME	GS	3A1635G01	1					
5A	TRUSS HEAD SCREW	4X8	7C31-0408	2					
6	RESERVOIR BRACKET	GS	2A1059-01	1					
6A	T2 SCREW	4X8	7P31-0408	4					
7	DRAIN PAN	ABS	323765G02	1					
8	STRAP	GS	4A1474-01	1					
8A	T3 SCREW	5X12	7G31-0512	2					
9	CLAMP	WS75-75-C	4A0337-12	3					
10	LOUVER (B)	PP	103121-03	1					
11	RING	PA	432661-02	1					
12	“O” RING	G70	7616-G070	1					
13	PACKING-SPOUT	EPDM	321037-01	1					
14	SPOUT	PC	104797-01	1					
15	THUMBSCREW	SS,ABS	415949G04	5					
16	STRAP	SS	321038G02	1					
17	STRAP	SS	328703-02	1					
17A	WING NUT	6, SS	7E12-0600	2					
18	TAPPING SCREW - BLACK	STEEL, 4 x 8	433954-01	1					
19	BUSHING	SB-1500-21	420470-06	3					
20	BARRIER	GS	4A0688-01	1					
20A	TRUSS HEAD SCREW	4X8	7C31-0408	2					
21	BUSHING	SR-30-1	420472-03	2					

MODEL: **F-1001MWF(-C)**		TITLE: **A. ICE FLAKER ASSEMBLY**						
INDEX NO.	DESCRIPTION	MATERIAL OR MODEL NUMBER	PART NUMBER	REQUIRED NUMBER				
				K-0 L-1				
22	WIRE SADDLE	VWS42105-C	4A0338-02	5				
23	SQUARE WASHER	BRASS	433537-02	1				
24	SCREW-GROUNDING	BRASS	433304-02	1				
25	SIDE PANEL (RIGHT)	SS	2A1845G01	1				
25A	TRUSS HEAD SCREW	4X8, SS	7C32-0408	1				
26	SIDE PANEL (LEFT)	SS	2A1846G01	1				
26A	TRUSS HEAD SCREW	4X8, SS	7C32-0408	1				
27	TOP PANEL	SS	2A1051-02	1				
28	FRONT PANEL	SS	2A1848-01	1				
29	WIRE SADDLE	VWS42105-C	4A0338-04	4				
30	BRACKET-CHUTE	SS	4A1712-01	1				

A. ICE FLAKER ASSEMBLY

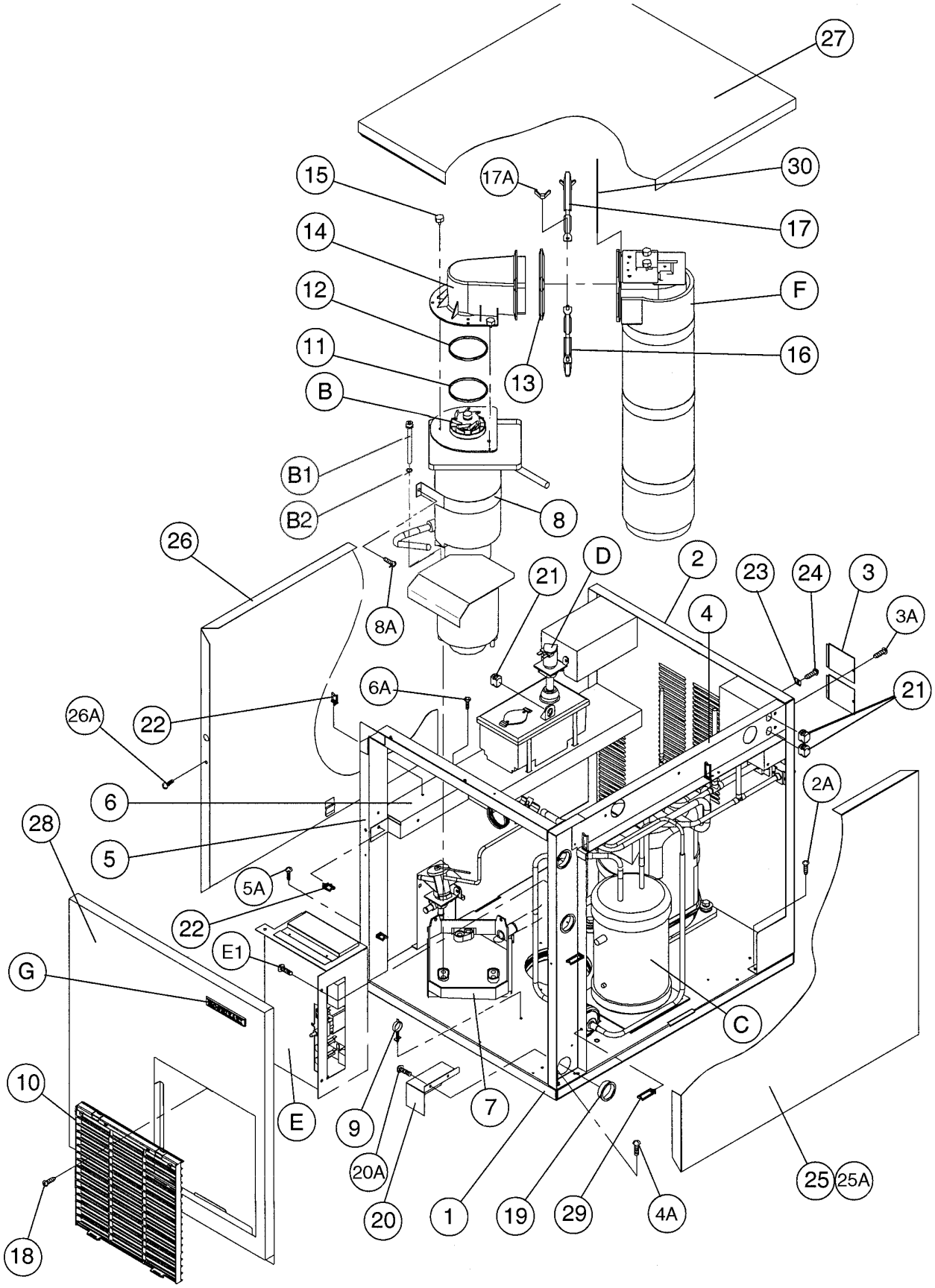

MODEL: **F-1001MRF**	TITLE: **A. ICE FLAKER ASSEMBLY**							
INDEX NO.	DESCRIPTION	MATERIAL OR MODEL NUMBER	PART NUMBER	REQUIRED NUMBER				
				K-0	L-1			
B	ICE MAKING UNIT	-	3A1600A01	1	1			
B1	SOCKET HEAD HEX BOLT	8X110, SS	7S12-0811	3	3			
B2	SPLIT LOCK WASHER	8, SS	7L22-0800	3	3			
C	REFRIGERATION UNIT	-	2A1022A02	1	1			
D	WATER CIRCUIT	HS-2025	2A1966A01	1	1			
E	CONTROL BOX ASSEMBLY	-	2A1045A02	1	-			
		-	2A1878A01		1			
E1	TRUSS HEAD SCREW	4X8	7C31-0408	3	3			
F	CHUTE ASSEMBLY	HS-2024	2A1705A04	1	1			
G	LABEL LOCATION	-	2A1849A03	1	1			

MODEL: **F-1001MRF-C**	TITLE: **A. ICE FLAKER ASSEMBLY**							
INDEX NO.	DESCRIPTION	MATERIAL OR MODEL NUMBER	PART NUMBER	REQUIRED NUMBER				
				K-0	L-1			
B	ICE MAKING UNIT	-	3A1600A02	1	1			
B1	SOCKET HEAD HEX BOLT	8X110, SS	7S12-0811	3	3			
B2	SPLIT LOCK WASHER	8, SS	7L22-0800	3	3			
C	REFRIGERATION UNIT	-	2A1022A02	1	1			
D	WATER CIRCUIT	HS-2025	2A1966A01	1	1			
E	CONTROL BOX ASSEMBLY	-	2A1045A02	1	-			
		-	2A1878A01		1			
E1	TRUSS HEAD SCREW	4X8	7C31-0408	3	3			
F	CHUTE ASSEMBLY	HS-2024	2A1705A04	1	1			
G	LABEL LOCATION	-	2A1849A07	1	1			

MODEL: **F-1001MRF(-C)**	TITLE: **A. ICE FLAKER ASSEMBLY**							
INDEX NO.	DESCRIPTION	MATERIAL OR MODEL NUMBER	PART NUMBER	REQUIRED NUMBER				
				K-0 L-1				
1	CHASSIS	GS	2A1176G05	1				
2	REAR PANEL	GS	2A1838G01	1				
2A	T2 SCREW	4X8	7P31-0408	4				
3	JUNCTION BOX COVER	GS	433410-01	2				
3A	T2 SCREW	4X8	7P31-0408	2				
4	SIDE FRAME (R)	GS	2A1545G01	1				
4A	TRUSS HEAD SCREW	4X8	7C31-0408	2				
5	FRONT FRAME	GS	3A1635G01	1				
5A	TRUSS HEAD SCREW	4X8	7C31-0408	2				
6	RESERVOIR BRACKET	GS	2A1059-01	1				
6A	T2 SCREW	4X8	7P31-0408	4				
7	DRAIN PAN	ABS	323765G02	1				
8	STRAP	GS	4A1474-01	1				
8A	T3 SCREW	5X12	7G31-0512	2				
9	CLAMP	WS75-75-C	4A0337-12	5				
10	LOUVER (B)	PP	103121-03	1				
11	RING	PA	432661-02	1				
12	"O" RING	G70	7616-G070	1				
13	PACKING-SPOUT	EPDM	321037-01	1				
14	SPOUT	PC	104797-01	1				
15	THUMBSCREW	SS,ABS	415949G04	5				
16	STRAP	SS	321038G02	1				
17	STRAP	SS	328703-02	1				
17A	WING NUT	6, SS	7E12-0600	2				
18	TAPPING SCREW - BLACK	STEEL, 4 x 8	433954-01	1				
19	BUSHING	SB-1500-21	420470-06	3				
20	BARRIER	GS	4A0688-01	1				
20A	TRUSS HEAD SCREW	4X8	7C31-0408	2				
21	BUSHING	SR-30-1	420472-03	3				

MODEL: **F-1001MRF(-C)**		TITLE: **A. ICE FLAKER ASSEMBLY**						
INDEX NO.	DESCRIPTION	MATERIAL OR MODEL NUMBER	PART NUMBER	REQUIRED NUMBER				
				K-0 L-1				
22	WIRE SADDLE	VWS42105-C	4A0338-02	5				
23	SQUARE WASHER	BRASS	433537-02	2				
24	SCREW-GROUNDING	BRASS	433304-02	2				
25	SIDE PANEL (RIGHT)	SS	2A1845G01	1				
25A	TRUSS HEAD SCREW	4X8, SS	7C32-0408	1				
26	SIDE PANEL (LEFT)	SS	2A1846G01	1				
26A	TRUSS HEAD SCREW	4X8, SS	7C32-0408	1				
27	TOP PANEL	SS	2A1051-02	1				
28	FRONT PANEL	SS	2A1848-01	1				
29	WIRE SADDLE	VWS42105-C	4A0338-04	4				
30	BRACKET-CHUTE	SS	4A1712-01	1				

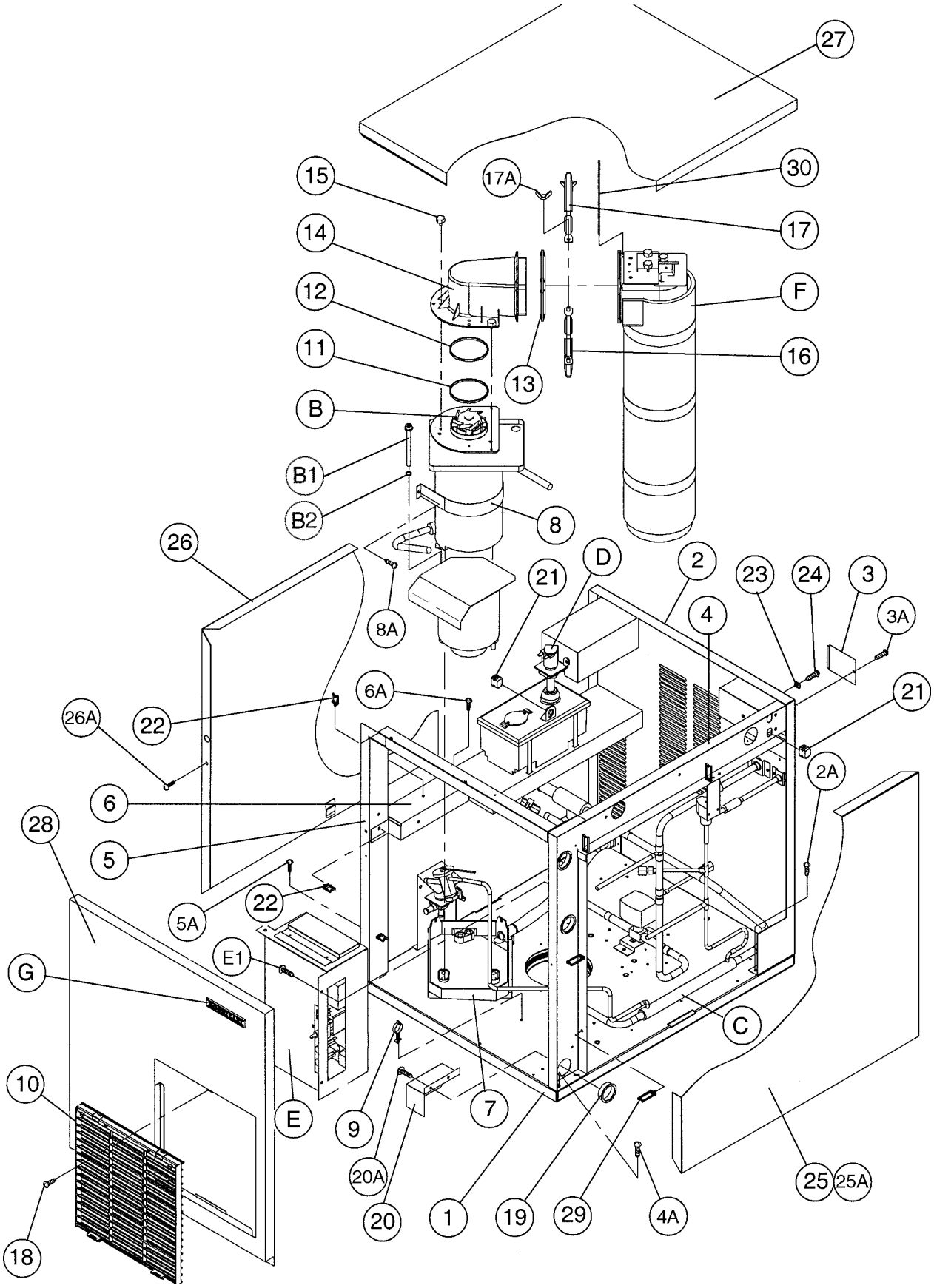
27
30
17A
17
15
14
F
12
16
11
13
B
B1
B2
8
26
D
2
23
24
3
21
4
3A
8A
6A
21
26A
22
2A
6
28
5
22
5A
E1
G
C
10
E
9
7
20A
20
1
19
29
4A
25
25A
18

MODEL: **F-1001MLF** TITLE: **A. ICE FLAKER ASSEMBLY**								
INDEX NO.	DESCRIPTION	MATERIAL OR MODEL NUMBER	PART NUMBER	REQUIRED NUMBER				
				K-0	L-1			
B	ICE MAKING UNIT	-	3A1600A01	1	1			
B1	SOCKET HEAD HEX BOLT	8X110, SS	7S12-0811	3	3			
B2	SPLIT LOCK WASHER	8, SS	7L22-0800	3	3			
C	REFRIGERATION UNIT	-	2A1023A02	1	1			
D	WATER CIRCUIT	HS-2025	2A1966A01	1	1			
E	CONTROL BOX ASSEMBLY	-	2A1917A01	1	1			
E1	TRUSS HEAD SCREW	4X8	7C31-0408	3	3			
F	CHUTE ASSEMBLY	HS-2024	2A1705A04	1	1			
G	LABEL LOCATION	-	2A1849A04	1	1			

MODEL: **F-1001MLF-C** TITLE: **A. ICE FLAKER ASSEMBLY**								
INDEX NO.	DESCRIPTION	MATERIAL OR MODEL NUMBER	PART NUMBER	REQUIRED NUMBER				
				K-0 L-1				
B	ICE MAKING UNIT	-	3A1600A02	1				
B1	SOCKET HEAD HEX BOLT	8X110, SS	7S12-0811	3				
B2	SPLIT LOCK WASHER	8, SS	7L22-0800	3				
C	REFRIGERATION UNIT	-	2A1023A02	1				
D	WATER CIRCUIT	HS-2025	2A1966A01	1				
E	CONTROL BOX ASSEMBLY	-	2A1917A01	1				
E1	TRUSS HEAD SCREW	4X8	7C31-0408	3				
F	CHUTE ASSEMBLY	HS-2024	2A1705A04	1				
G	LABEL LOCATION	-	2A1849A08	1				

MODEL: **F-1001MLF(-C)** TITLE: **A. ICE FLAKER ASSEMBLY**								
INDEX NO.	DESCRIPTION	MATERIAL OR MODEL NUMBER	PART NUMBER	REQUIRED NUMBER				
				K-0 L-1				
1	CHASSIS	GS	2A1176G06	1				
2	REAR PANEL	GS	2A1840G01	1				
2A	T2 SCREW	4X8	7P31-0408	4				
3	JUNCTION BOX COVER	GS	433410-01	1				
3A	T2 SCREW	4X8	7P31-0408	1				
4	SIDE FRAME (R)	GS	2A1545G01	1				
4A	TRUSS HEAD SCREW	4X8	7C31-0408	2				
5	FRONT FRAME	GS	3A1635G01	1				
5A	TRUSS HEAD SCREW	4X8	7C31-0408	2				
6	RESERVOIR BRACKET	GS	2A1060-01	1				
6A	T2 SCREW	4X8	7P31-0408	4				
7	DRAIN PAN	GS	323765G02	1				
8	STRAP	GS	4A1474-01	1				
8A	T3 SCREW	5X12	7G31-0512	2				
9	CLAMP	WS75-75-C	4A0337-12	4				
10	LOUVER (B)	PP	103121-03	1				
11	RING	PA	432661-02	1				
12	“O” RING	G70	7616-G070	1				
13	PACKING-SPOUT	EPDM	321037-01	1				
14	SPOUT	PC	104797-01	1				
15	THUMBSCREW	SS,ABS	415949G04	5				
16	STRAP	SS	321038G02	1				
17	STRAP	SS	328703-02	1				
17A	WING NUT	6, SS	7E12-0600	2				
18	TAPPING SCREW - BLACK	STEEL, 4 x 8	433954-01	1				
19	BUSHING	SB-1500-21	420470-06	3				
20	BARRIER	GS	4A0688-01	1				
20A	TRUSS HEAD SCREW	4X8	7C31-0408	2				
21	BUSHING	SR-30-1	420472-03	2				

MODEL: **F-1001MLF(-C)** TITLE: **A. ICE FLAKER ASSEMBLY**								
INDEX NO.	DESCRIPTION	MATERIAL OR MODEL NUMBER	PART NUMBER	REQUIRED NUMBER				
				K-0 L-1				
22	WIRE SADDLE	VWS42105-C	4A0338-02	5				
23	SQUARE WASHER	BRASS	433537-02	1				
24	SCREW-GROUNDING	BRASS	433304-02	1				
25	SIDE PANEL (RIGHT)	SS	2A1845G01	1				
25A	TRUSS HEAD SCREW	4X8, SS	7C32-0408	1				
26	SIDE PANEL (LEFT)	SS	2A1846G01	1				
26A	TRUSS HEAD SCREW	4X8, SS	7C32-0408	1				
27	TOP PANEL	SS	2A1051-02	1				
28	FRONT PANEL	SS	2A1848-01	1				
29	WIRE SADDLE	VWS42105-C	4A0338-04	4				
30	BRACKET-CHUTE	SS	4A1712-01	1				

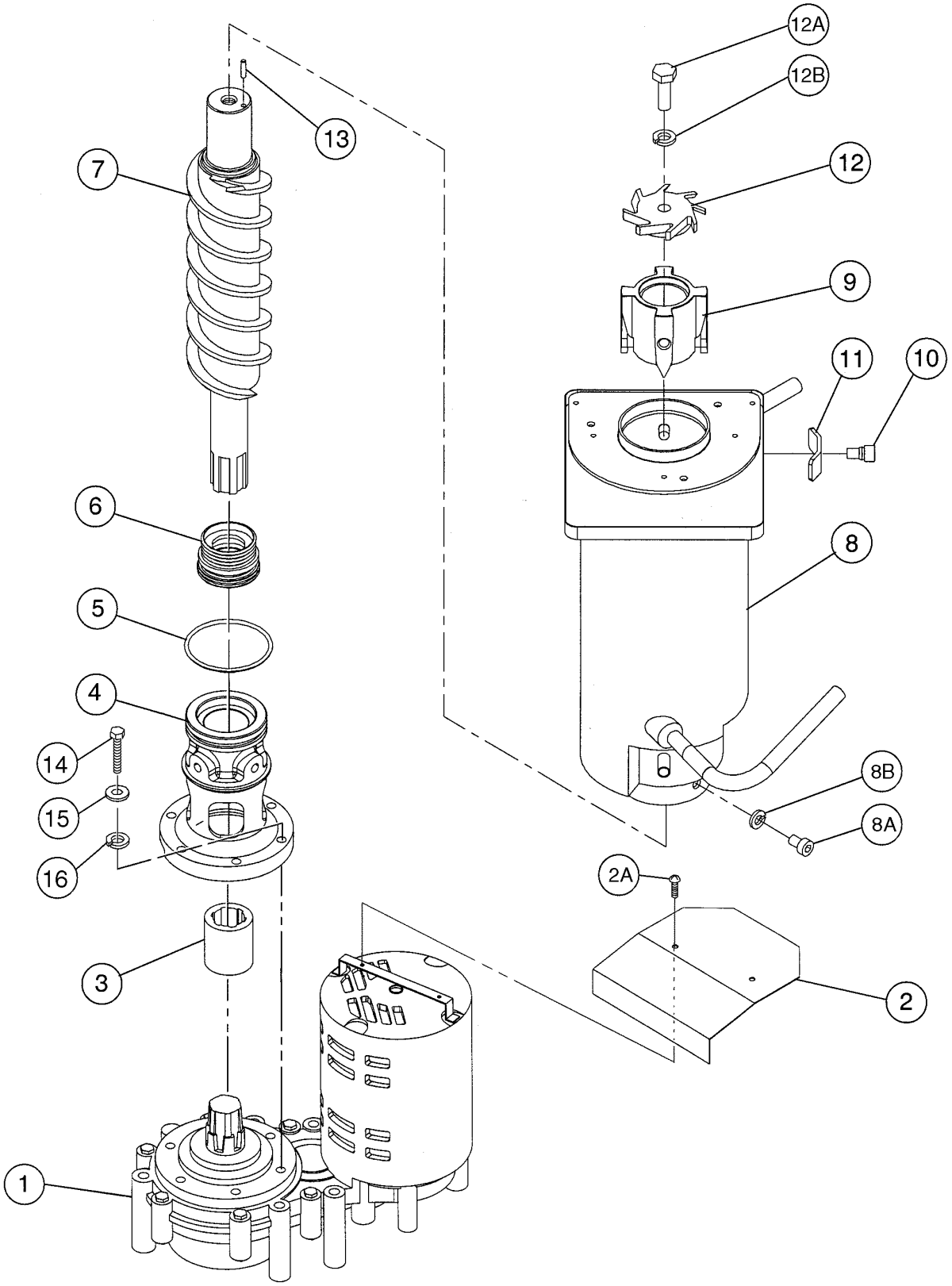
12A
12B
13
7
12
9
11
10
6
8
5
4
14
8B
15
8A
16
2A
3
2
1

MODEL: **F-1001MAF, MWF, MRF, MLF** TITLE: **B. ICE MAKING UNIT**								
INDEX NO.	DESCRIPTION	MATERIAL OR MODEL NUMBER	PART NUMBER	REQUIRED NUMBER				
				K-0 L-1				
1	GEAR MOTOR	-	4A2007-01	1				
2	BARRIER - GEAR MOTOR	GS	3A1732-01	1				
2A	TRUSS HEAD SCREW	4X8, SS	7C32-0408	2				
3	COUPLING - SPLINE	SS	414137-01	1				
4	HOUSING	BRASS	2A1977G01	1				
5	“O” RING	G65	7616-G065	1				
6	MECHANICAL SEAL	HK9A-MN	432492-01	1				
7	AUGER	SS	2A0932G02	1				
8	EVAPORATOR	-	2A1227G01	1				
8A	SOCKET HEAD CAP SCREW	8X12, SS	7S12-0812	4				
8B	SPLIT LOCK WASHER	8, SS	7L22-0800	4				
9	EXTRUDING HEAD / 70F	SS	327097G01	x1				
		SS	3A2175G01	o1				
10	SOCKET HEAD CAP SCREW	SS	429121-01	4				
11	WASHER	SS	427184-01	4				
12	CUTTER	SS	3A1395-02	1				
12A	HEX HEAD BOLT	10X30, SS	7B02-1030	1				
12B	SPLIT LOCK WASHER	10, SS	7L22-1000	1				
13	DOWEL PIN	SS, 4 x 16	713S-0416	1				
14	HEX BOLT	8X30, SS	7B02-0830	6				
15	PLAIN WASHER	8, SS	7W22-0800	6				
16	SPLIT LOCK WASHER	8, SS	7L22-0800	6				

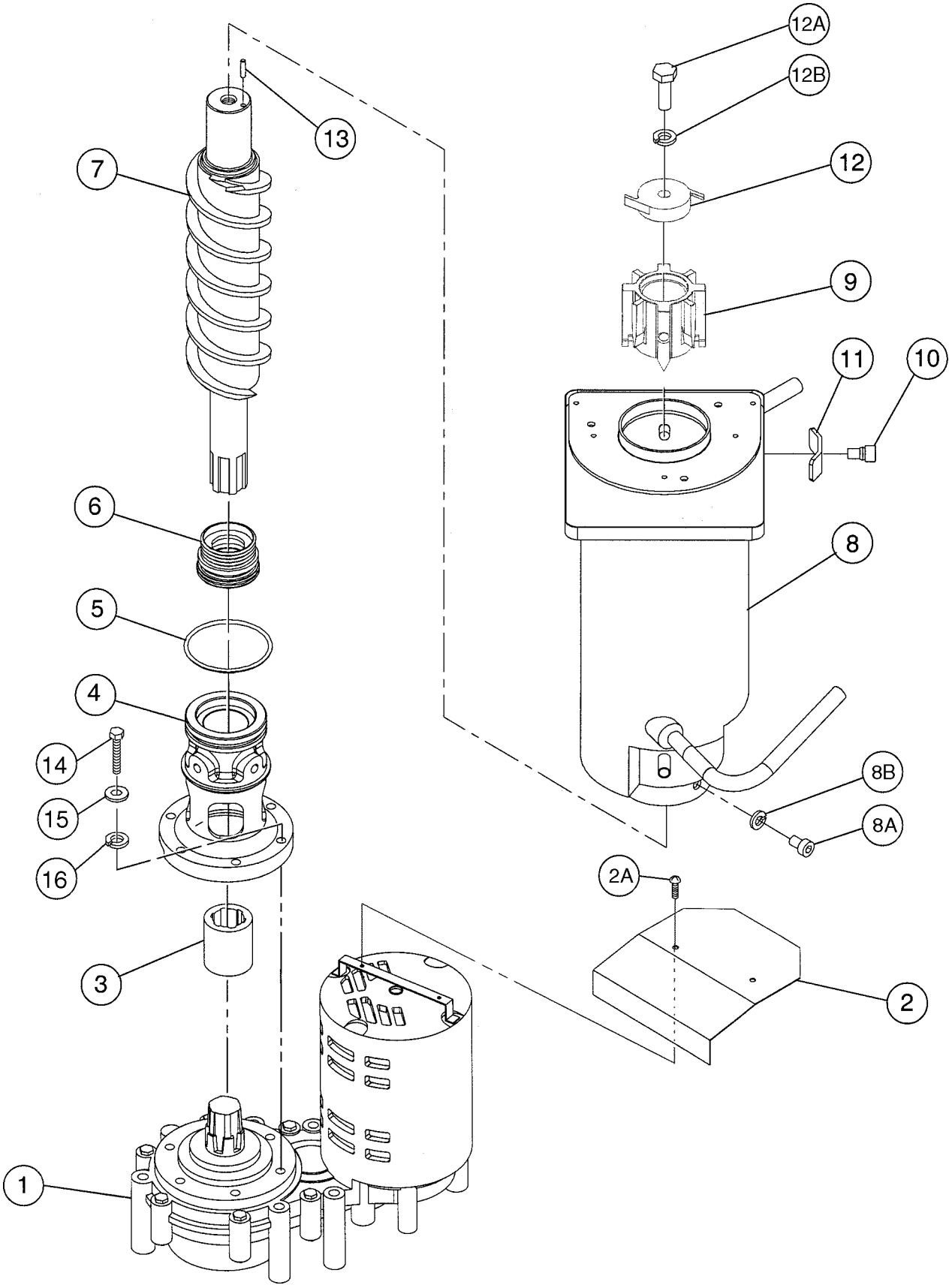
12A
12B
13
12
7
9
11
10
6
8
5
4
14
8B
15
8A
16
2A
3
2
1

MODEL: **F-1001MAF-C, MWF-C, MRF-C, MLF-C** TITLE: **B. ICE MAKING UNIT**								
INDEX NO.	DESCRIPTION	MATERIAL OR MODEL NUMBER	PART NUMBER	REQUIRED NUMBER				
				K-0 L-1				
1	GEAR MOTOR	V06695-ACAA	4A2007-01	1				
2	BARRIER - GEAR MOTOR	GS	3A1732-01	1				
2A	TRUSS HEAD SCREW	4X8, SS	7C32-0408	2				
3	COUPLING - SPLINE	SS	414137-01	1				
4	HOUSING	BRASS	2A1977G01	1				
5	“O” RING	G65	7616-G065	1				
6	MECHANICAL SEAL	HK9A-MN	432492-01	1				
7	AUGER	SS	2A0932G02	1				
8	EVAPORATOR	-	2A1227G01	1				
8A	SOCKET HEAD CAP SCREW	8X12, SS	7S12-0812	4				
8B	SPLIT LOCK WASHER	8, SS	7L22-0800	4				
9	EXTRUDING HEAD / 70N	SS	216531G01	x1				
		SS	3A2176G01	o1				
10	SOCKET HEAD CAP SCREW	SS	429121-01	4				
11	WASHER	SS	427184-01	4				
12	CUTTER	SS	327145-01	1				
12A	HEX HEAD BOLT	10X30, SS	7B02-1030	1				
12B	SPLIT LOCK WASHER	10, SS	7L22-1000	1				
13	DOWEL PIN	SS, 4 x 16	713S-0416	1				
14	HEX BOLT	8X30, SS	7B02-0830	6				
15	PLAIN WASHER	8, SS	7W22-0800	6				
16	SPLIT LOCK WASHER	8, SS	7L22-0800	6				

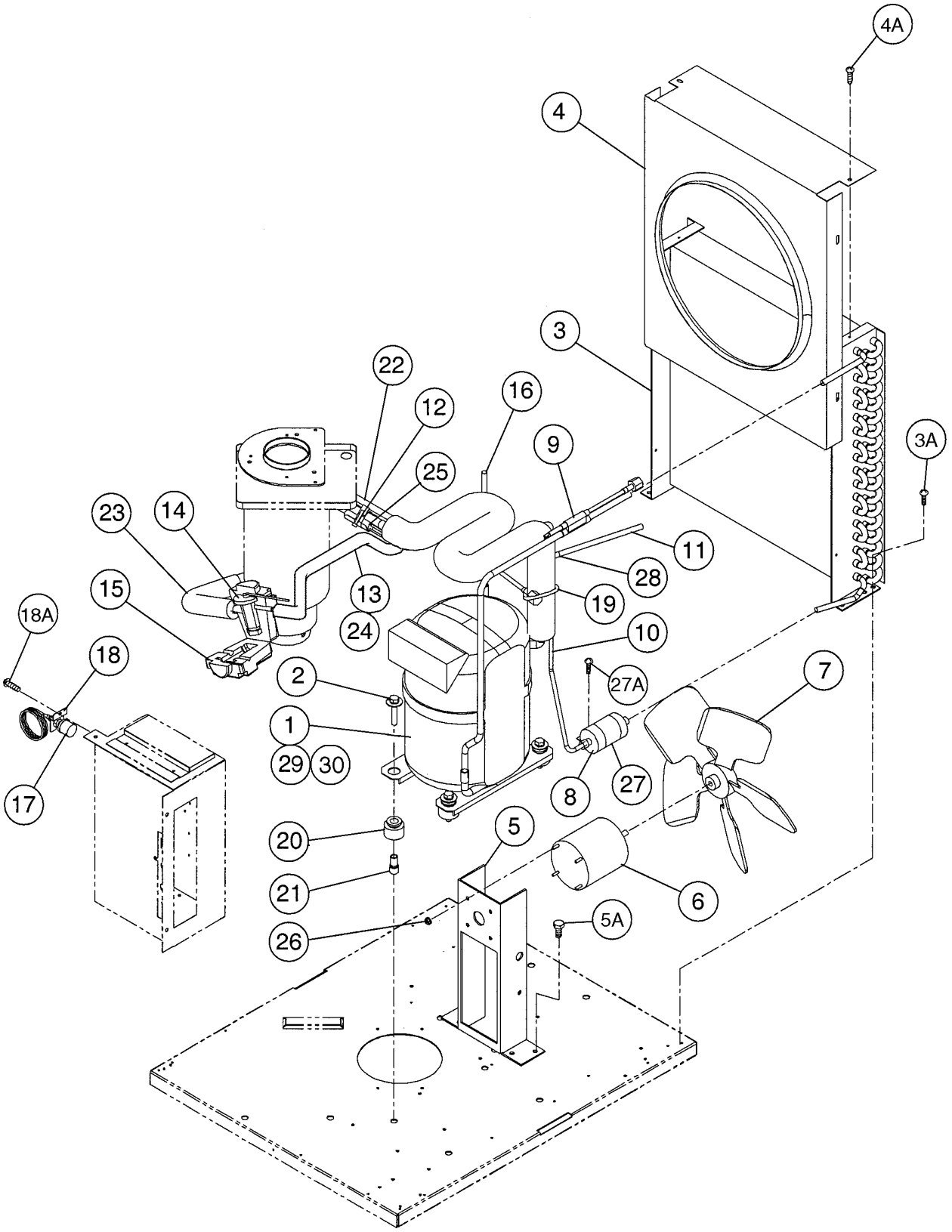
4A
4
3
3A
22
12
16
9
25
23
14
11
28
15
13
19
18A
24
10
18
2
27A
7
1
29
30
8
27
17
20
5
21
6
26
5A

MODEL: **F-1001MAF(-C)** TITLE: **C. REFRIGERATION UNIT**								
INDEX NO.	DESCRIPTION	MATERIAL OR MODEL NUMBER	PART NUMBER	REQUIRED NUMBER				
				K-0 L-1				
1	COMPRESSOR	RS70-CIE-PFV	4A1322-01	1				
2	BOLT	8 x 45	437889-01	4				
3	CONDENSER-AIR COOLED	967307C	211663-02	1				
3A	FT SCREW	4X8, SS	7F32-0408	4				
4	SHROUD	GS	2A0449-01	1				
4A	T2 SCREW	4X8	7P31-0408	6				
5	FAN MOTOR BRACKET	GS	3A0341-01	1				
5A	HEX HEAD BOLT W/WASHER	5X12, SS	7B0230512	4				
6	FAN MOTOR	U90B17190-1031	440911-01	1				
7	FAN BLADE	AD12CW25	4A0197-01	1				
8	DRIER	ATC 32S	4A1113-01	1				
9	COPPER TUBE (A) - HIGH SIDE	COPPER	3A0928G01	1				
10	COPPER TUBE (B) -HIGH SIDE	COPPER	3A0921-01	1				
11	COPPER TUBE-PROCESS	COPPER	4A1365-01	1				
12	CLAMP	08	443461-01	1				
13	COPPER TUBE - HEAT EXCHANGER	COPPER	3A1662G01	1				
14	EXPANSION VALVE	AN-1-SC	4A1117-01	1				
15	EXP. VALVE COVER	PE FOAM	4A1168-01	1				
16	COPPER TUBE-ACCESS VALVE	COPPER	4A1364G01	1				
17	PRESSURE SWITCH	ACB-2UB04	433441-05	1				
18	PRESSURE SWITCH BRACKET	GS	434938-01	1				
18A	T2 SCREW	4X8	7P31-0408	1				
19	CABLE TIE	CV-150	7920-0003	12				
20	GROMMET	027-0073-00	434403-01	4				
21	SPACER	027-0072-02	434404-01	4				
22	INSULATION TUBE	L=130	7762-2943	1				
23	INSULATION TUBE	L=170	7762-1330	1				
24	INSULATION TUBE	L=400	7762-0717	1				

MODEL: **F-1001MAF(-C)** TITLE: **C. REFRIGERATION UNIT**								
INDEX NO.	DESCRIPTION	MATERIAL OR MODEL NUMBER	PART NUMBER	REQUIRED NUMBER				
				K-0 L-1				
25	HOLDER/EXP.VALVE-1/2	SS	3A0112-01	1				
26	SELF- LOCKING NUT	NO-8-32	7N21I0832	4				
27	DRIER BRACKET	GS	445847-01	1				
27A	FT SCREW	4X8	7F31-0408	1				
28	TEE	111-2	436000-01	1				
29	TERMINAL COVER	-	4A1322F01	1				
30	SPRING CLIP	-	4A1322F02	1				

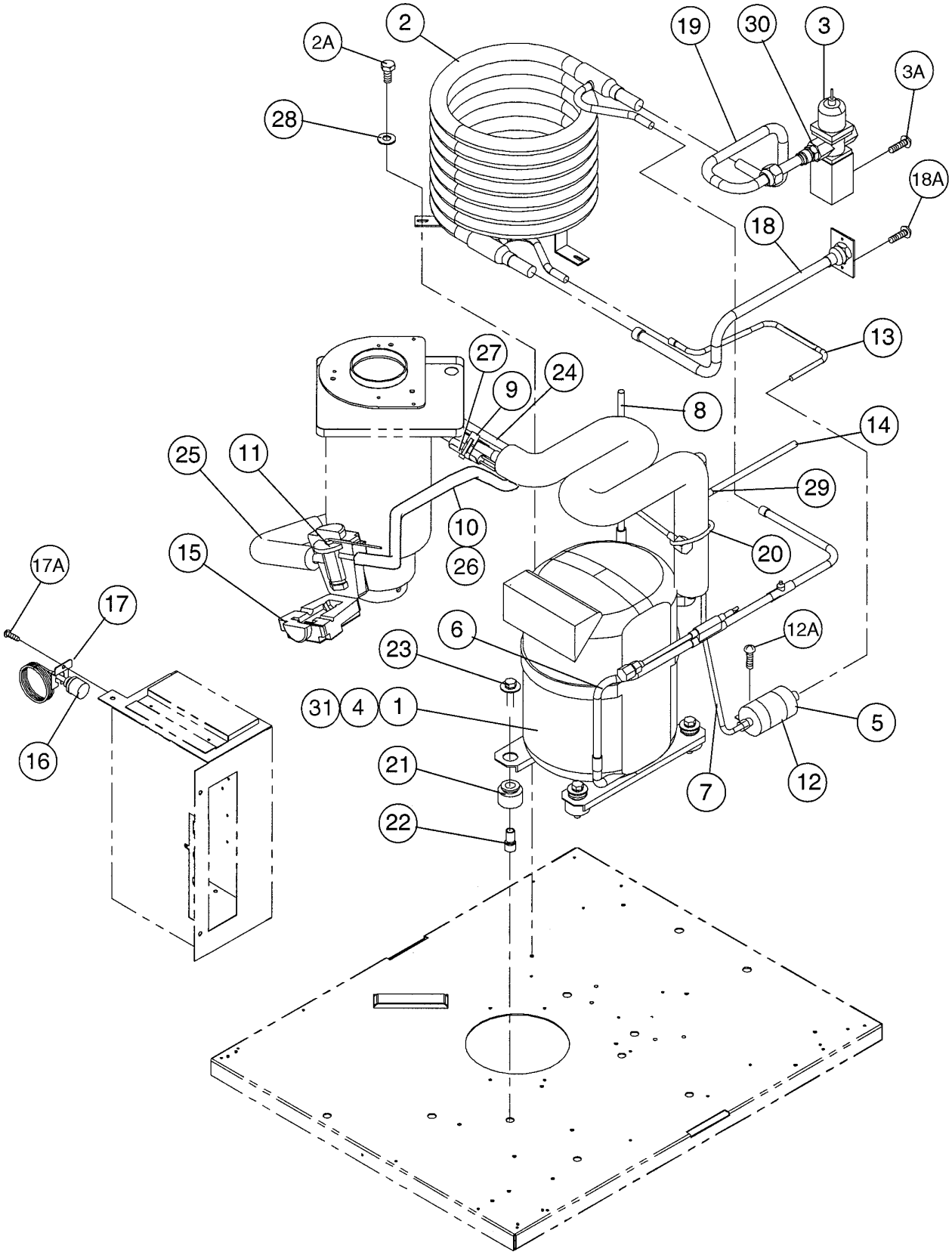
2
2A
28
19
30
3
3A
18A
18
13
27
24
9
8
14
25
11
29
10
26
20
15
17A
17
6
12A
23
31
4
1
5
16
21
7
12
22

MODEL: **F-1001MWF(-C)** TITLE: **C. REFRIGERATION UNIT**								
INDEX NO.	DESCRIPTION	MATERIAL OR MODEL NUMBER	PART NUMBER	REQUIRED NUMBER				
				K-0 L-1				
1	COMPRESSOR	R570CIE-PFV	4A1322-01	1				
2	CONDENSER-WATER COOLED	(S-0725)	215545G01	1				
2A	HEX BOLT W/WASHER (LF)	5X12, SS	7B0230512	3				
3	WATER REGULATOR	V46EA-7	4A0911-04	1				
3A	TRUSS HEAD SCREW	4X6	7C31-0406	2				
4	TERMINAL COVER	-	4A1322F01	1				
5	DRIER	ATC 32S	4A1113-01	1				
6	COPPER TUBE (A) - HIGH SIDE	COPPER	3A0920G01	1				
7	COPPER TUBE (B) - HIGH SIDE	COPPER	3A0921-01	1				
8	COPPER TUBE - ACCESS VALVE	COPPER	4A1364G01	1				
9	CLAMP	08	443461-01	1				
10	COPPER TUBE - HEAT EXCHANGER	COPPER	3A1662G01	1				
11	EXPANSION VALVE	AN-1-SC	4A1117-01	1				
12	DRIER BRACKET	GS	445847-01	1				
12A	FT SCREW	4x8	7F31-0408	1				
13	COPPER TUBE-DRIER	COPPER	3A0891-01	1				
14	COPPER TUBE-PROCESS	COPPER	4A1365-01	1				
15	EXP. VALVE COVER	PE FOAM	4A1168-01	1				
16	PRESSURE SWITCH	ACB-2UB04	433441-05	1				
17	PRESS. SWITCH BRACKET	GS	434938-01	1				
17A	T2 SCREW	4X8		3				
18	COPPER TUBE-WATER INLET	COPPER	3A1095G01	1				
18A	TRUSS HEAD SCREW	4X8	7C31-0408	2				
19	COPPER TUBE-WATER OUTLET	COPPER	3A0930G01	1				
20	CABLE TIE	CV-150	7920-0003	16				
21	GROMMET	027-0073-00	434403-01	4				
22	SPACER	027-0072-02	434404-01	4				
23	BOLT	8 x 45	437889-01	1				
24	INSULATION TUBE	L=130	7762-2943	1				

MODEL: **F-1001MWF(-C)** TITLE: **C. REFRIGERATION UNIT**								
INDEX NO.	DESCRIPTION	MATERIAL OR MODEL NUMBER	PART NUMBER	REQUIRED NUMBER				
				K-0 L-1				
25	INSULATION TUBE	L=170	7762-1330	1				
26	INSULATION TUBE	L=400	7762-0717	1				
27	HOLDER/EXP. VALVE-1/2	SS	3A0112-01	1				
28	WASHER	-	4A0655-03	3				
29	TEE	111-2	436000-01	1				
30	MALE CONNECTOR	48F-8-6	4A1087-01	1				
31	SPRING CLIP	-	4A1322F02	1				

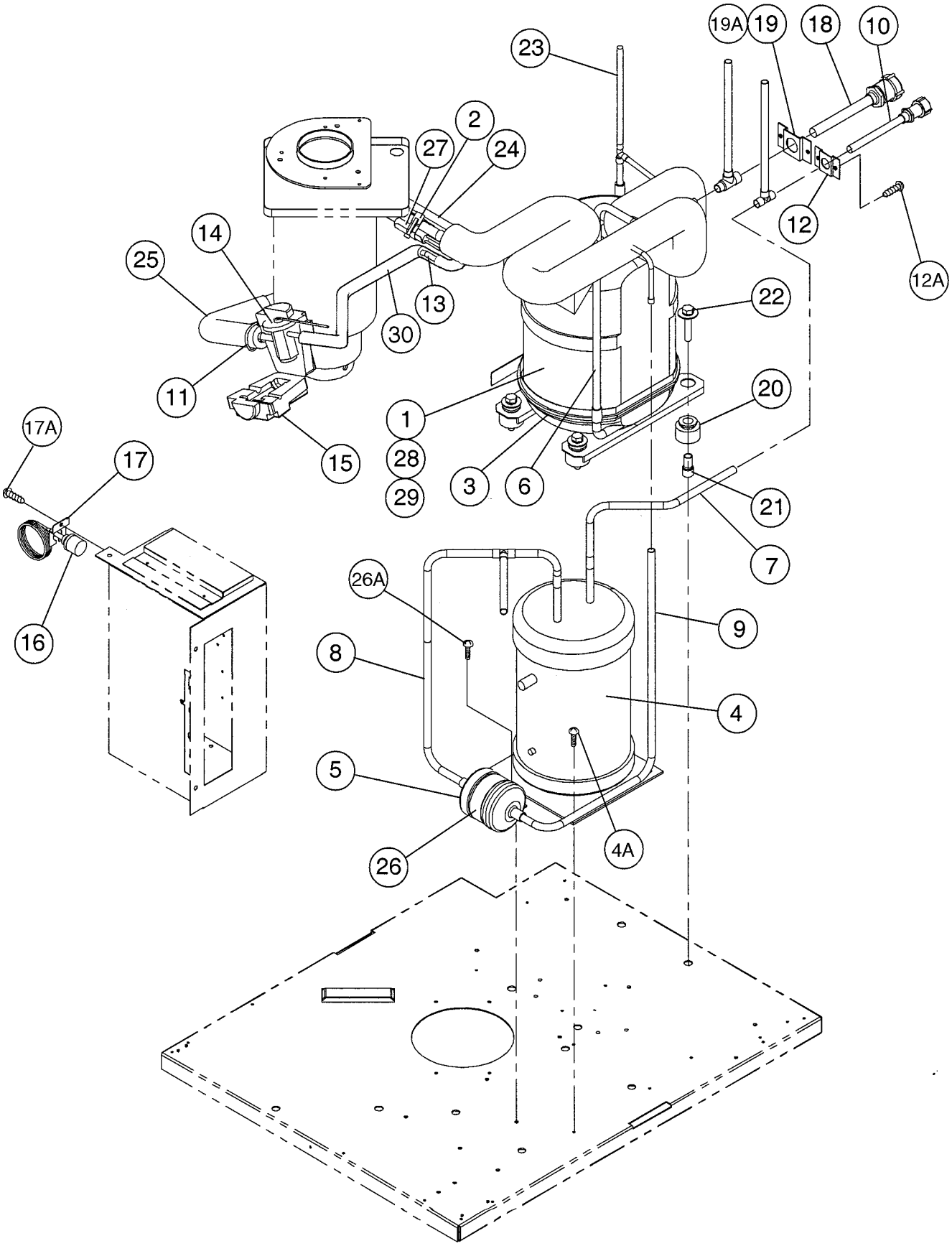
19A
19
18
10
23
2
27
24
12
12A
14
25
13
22
30
11
20
1
17A
17
15
28
3
6
29
21
7
26A
9
16
8
4
5
4A
26

MODEL: **F-1001MRF(-C)** TITLE: **C. REFRIGERATION UNIT**								
INDEX NO.	DESCRIPTION	MATERIAL OR MODEL NUMBER	PART NUMBER	REQUIRED NUMBER				
				K-0 L-1				
1	COMPRESSOR	RS70CIE-PFV	4A1322-01	1				
2	CLAMP	08	443461-01	1				
3	CRANKCASE HEATER	018-0038- 0045W,120V	434186-01	1				
4	RECEIVER TANK	6813	437652-01	1				
4A	FT SCREW	4X8, SS	7F32-0408	3				
5	DRIER	ATC 53S	4A1338-01	1				
6	COPPER TUBE(A)- HIGH SIDE	COPPER	3A0923G01	1				
7	COPPER TUBE (B) - HIGH SIDE	COPPER	3A0924G01	1				
8	COPPER TUBE(C)- HIGH SIDE	COPPER	3A1222G01	1				
9	COPPER TUBE(D)- HIGH SIDE	COPPER	4A1368-01	1				
10	COUPLING	COPPER	433751G01	1				
11	CABLE TIE	CV-150	7920-0003	11				
12	TUBE HOLDER - S	GS.	438246-01	1				
12A	T2 SCREW	4X8	7P31-0408	2				
13	COPPER TUBE - HEAT EXCHANGER	COPPER	3A1736G01	1				
14	EXPANSION VALVE	AN-1-SC	4A1117-01	1				
15	EXP. VALVE COVER	PE FOAM	4A1168-01	1				
16	PRESSURE SWITCH	ACB-2UB04	433441-05	1				
17	PRESSURE SWITCH BRACKET	GS.	434938-01	1				
17A	T2 SCREW	4X8	7P31-0408	1				
18	COUPLING (MALE)	BRASS	434132G01	1				
19	TUBE HOLDER-L	GS.	438245-01	1				
19A	T2 SCREW	4X8	7P31-0408	1				
20	GROMMET	027-0073-00	434403-01	4				
21	SPACER	027-0072-02	434404-01	4				
22	BOLT	8 x 45	437889-01	4				
23	COPPER TUBE - ACCESS VALVE	COPPER	4A1364G01	1				

MODEL: **F-1001MRF(-C)** TITLE: **C. REFRIGERATION UNIT**								
INDEX NO.	DESCRIPTION	MATERIAL OR MODEL NUMBER	PART NUMBER	REQUIRED NUMBER				
				K-0 L-1				
24	INSULATION TUBE	L=130	7762-2943	1				
25	INSULATION TUBE	L=170	7762-1330	1				
26	DRIER BRACKET	GS	4A1348-01	1				
26a	FT SCREW	4X8, SS	7F32-0408	1				
27	HOLDER/EXP.VALVE-1/2	SS	3A0112-01	1				
28	TERMINAL COVER	-	4A1322F01	1				
29	SPRING CLIP	-	4A1322F02	1				
30	INSULATION TUBE	L=400	7762-0717	1				

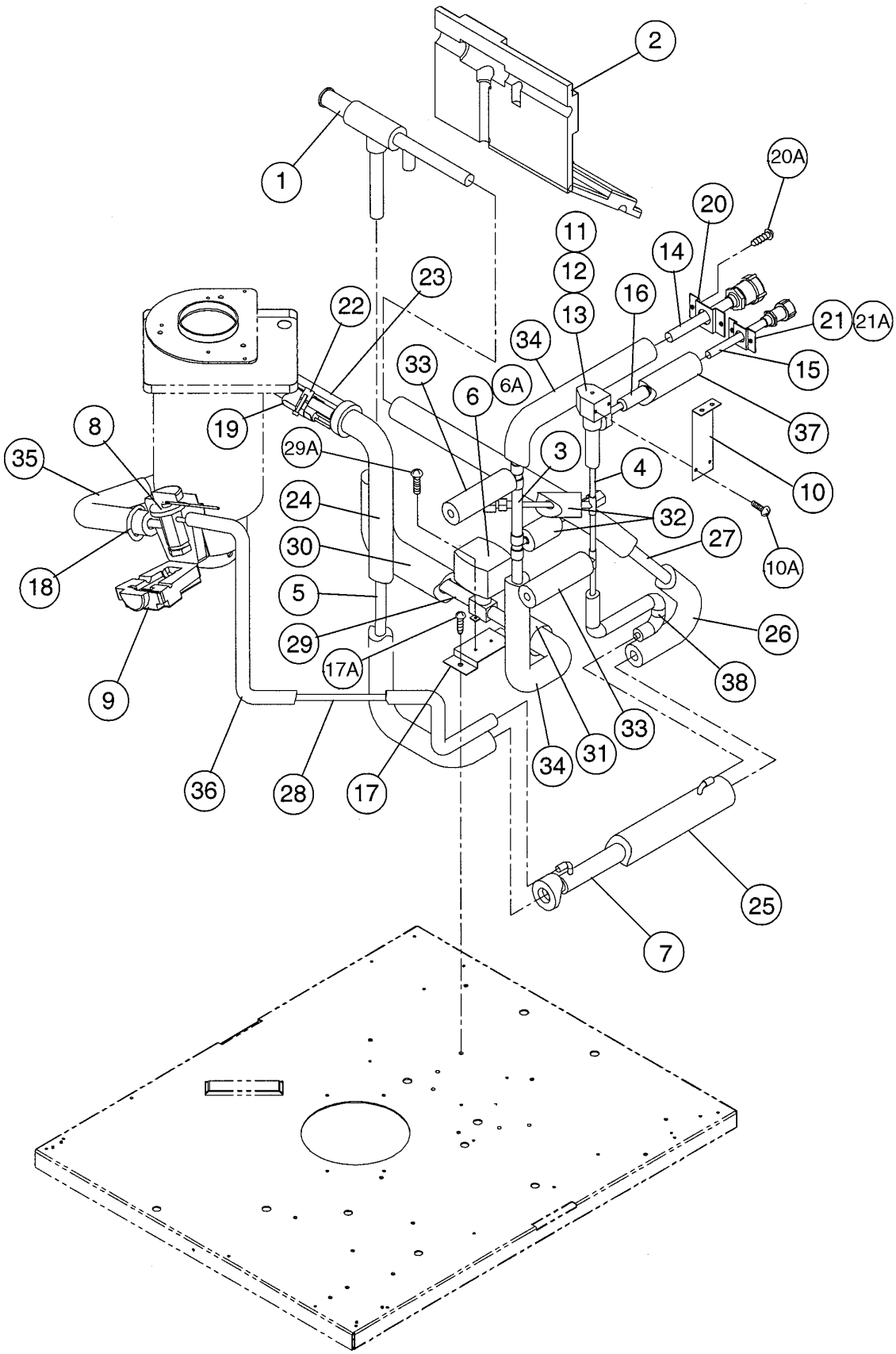
2
1
20A
20
11
14
12
23
16
22
13
21
21A
34
15
33
6
6A
37
8
19
29A
3
4
35
10
24
32
27
10A
30
18
5
26
29
17A
38
9
33
34
31
36
28
17
25
7

MODEL: F-1001MLF(-C) TITLE: C. REFRIGERATION UNIT								
INDEX NO.	DESCRIPTION	MATERIAL OR MODEL NUMBER	PART NUMBER	REQUIRED NUMBER				
				K-0 L-1				
1	EPR VALVE		4A1384-01	1				
2	EPR VALVE COVER	PE - FOAM	340434-01	1				
3	COPPER TUBE - (OUT)	COPPER	3A0951G01	1				
4	COPPER TUBE - (IN)	COPPER	3A0953G01	1				
5	COPPER TUBE-HEAT EXCHANGER	COPPER	3A1738-01	1				
6	SOLENOID VALVE	SLHE 1/2	446873-01	1				
6A	TRUSS HEAD	4X8	7C31-0408	2				
7	HEAT EXCHANGER		4A1374-01	1				
8	EXPANSION VALVE	AN-1-SC	4A1117-01	1				
9	EXPANSION VALVE COVER	PE FOAM	4A1168-01	1				
10	HOT GAS VALVE BRACKET	GS.	4A1400-01	1				
11	VALVE BODY	70	440352-01	1				
12	COIL - VALVE	ABS-25-1-HD-2	440353-01	1				
13	BOLT	-	440353F01	1				
14	COUPLING-(MALE)	COPPER	434132G01	1				
15	COUPLING	COPPER	433751G01	1				
16	STRAINER	625007	4A1385-01	1				
17	BRACKET (B) VALVE	GS.	446871-01	1				
17A	T2 SCREW	4X8	7P31-0408	2				
18	CABLE TIE	CV-150	7920-0003	23				
19	HOLDER / EXP. VALVE - 1/2	SS.	3A0112-01	1				
20	TUBE HOLDER - L	GS.	438245-01	1				
20A	T2 SCREW	4X8	7P31-0408	2				
21	TUBE HOLDER - S	GS.	438246-01	1				
21A	T2 SCREW	4X8	7P31-0408	2				
22	CLAMP	08	443461-01	1				
23	INSULATION TUBE	L=130	7762-2943	1				
24	INSULATION TUBE	L=850	7762-1330	1				
25	INSULATION TUBE	L=310	7762-2040	1				

MODEL: F-1001MLF(-C) TITLE: C. REFRIGERATION UNIT								
INDEX NO.	DESCRIPTION	MATERIAL OR MODEL NUMBER	PART NUMBER	REQUIRED NUMBER				
				K-0 L-1				
26	INSULATION TUBE	L=600	7762-1330	1				
27	COPPER TUBE - VALVE	COPPER	3A0955-01	1				
28	COPPER TUBE - EXP. VALVE	COPPER	3A1737-01	1				
29	COPPER TUBE - EPR	COPPER	3A0954-01	1				
29A	TRUSS HEAD SCREW	4X8	7C31-0408	4				
30	INSULATION TUBE	L=250	7762-2040	1				
31	INSULATION TUBE	L=200	7762-2040	1				
32	INSULATION TUBE	L=150	7762-1030	2				
33	INSULATION TUBE	L=100	7762-1030	2				
34	INSULATION TUBE	L=400	7762-1330	2				
35	INSULATION TUBE	L=170	7762-1330	1				
36	INSULATION TUBE	L=750	7762-0717	1				
37	INSULATION TUBE	L=170	7762-1330	1				
38	INSULATION TUBE	L=505	7762-1030	1				

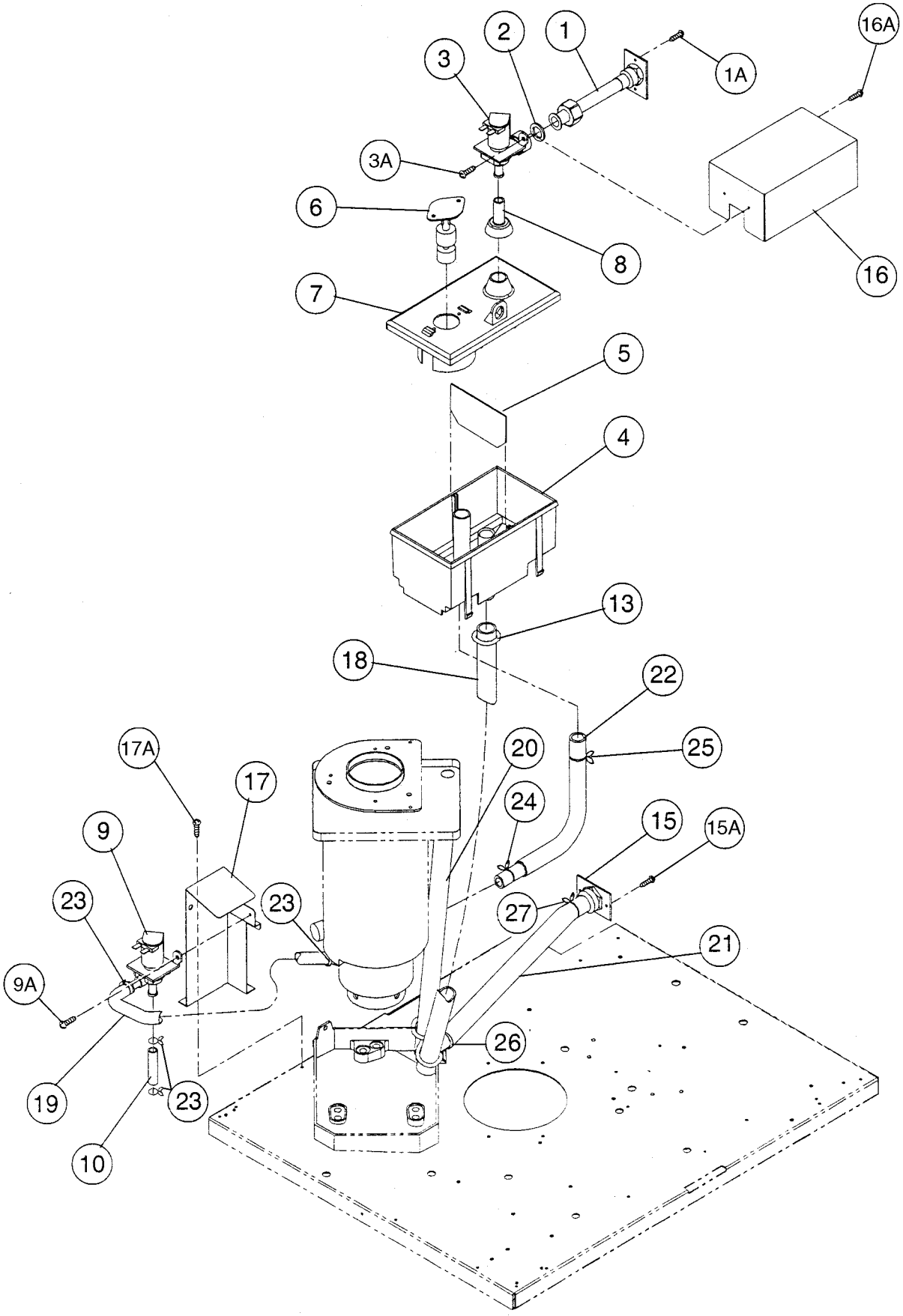
1
1A
2
3
3A
16A
16
6
8
7
5
4
13
18
22
25
20
24
15
15A
27
21
26
17A
17
9
23
23
9A
19
23
10

MODEL: **F-1001MAF(-C), MWF(-C), MRF(-C), MLF(-C)** TITLE: **D. WATER CIRCUIT**								
INDEX NO.	DESCRIPTION	MATERIAL OR MODEL NUMBER	PART NUMBER	REQUIRED NUMBER				
				K-0 L-1				
1	WATER SUPPLY PIPE	COPPER	4A0891G01	1				
1A	T2 SCREW	4X8	7P31-0408	2				
2	WASHER	K-59963	4A0867-01	1				
3	WATER VALVE	S-30	4A0865-01	1				
3A	T2 SCREW	4X8, SS	7P32-0408	2				
4	RESERVOIR	PP.	2A0753-01	1				
5	SEPARATOR-RESERVOIR	ABS	4A1255-01	1				
6	FLOAT SWITCH	TW-1221-101	435490-01	1				
7	RESERVOIR COVER	PP.	214810-01	1				
8	INLET- RESERVOIR	SI.R.	4A0869-01	1				
9	WATER VALVE	S-60N	4A2077-01	1				
9A	T2 SCREW	4X8	7P31-0408	2				
10	VINYL HOSE	L=67	7716-0913	1				
11	CLAMP	S 8.3	435934-06	1				
12	CLAMP	MH-30N	421642-04	2				
13	CABLE TIE	CV-150	7920-0003	8				
14	CLAMP	S 7	435934-05	1				
15	FITTING	COPPER	4A0776G01	1				
15A	T2 SCREW	4X6	7P31-0406	2				
16	WATER VALVE BRACKET	GS	3A0553-01	1				
16A	T2 SCREW	4X8	7P31-0408	3				
17	WATER VALVE BRACKET (D)	GS	3A0554-01	1				
17A	T2 SCREW	4X8	7P31-0408	2				
18	SILICONE HOSE	L=410	7730-1822	1				
19	SILICONE HOSE	L=225	7730Ī3896	1				
20	VINYL HOSE	L=460	7725-1923	1				
21	VINYL HOSE	L=400	7716-2025	1				
22	RESERVOIR HOSE	EPDM	4A1165-06	1				
23	HOSE CLAMP	-	4A2017-08	4				

MODEL: F-1001MAF(-C), MWF(-C), MRF(-C), MLF(-C) TITLE: D. WATER CIRCUIT								
INDEX NO.	DESCRIPTION	MATERIAL OR MODEL NUMBER	PART NUMBER	REQUIRED NUMBER				
				K-0 L-1				
24	HOSE CLAMP	-	4A2017-05	1				
25	HOSE CLAMP	-	4A2017-06	1				
26	HOSE CLAMP	-	4A2017-01	1				
27	HOSE CLAMP	-	4A2017-02	1				

E. CONTROL BOX ASSEMBLY

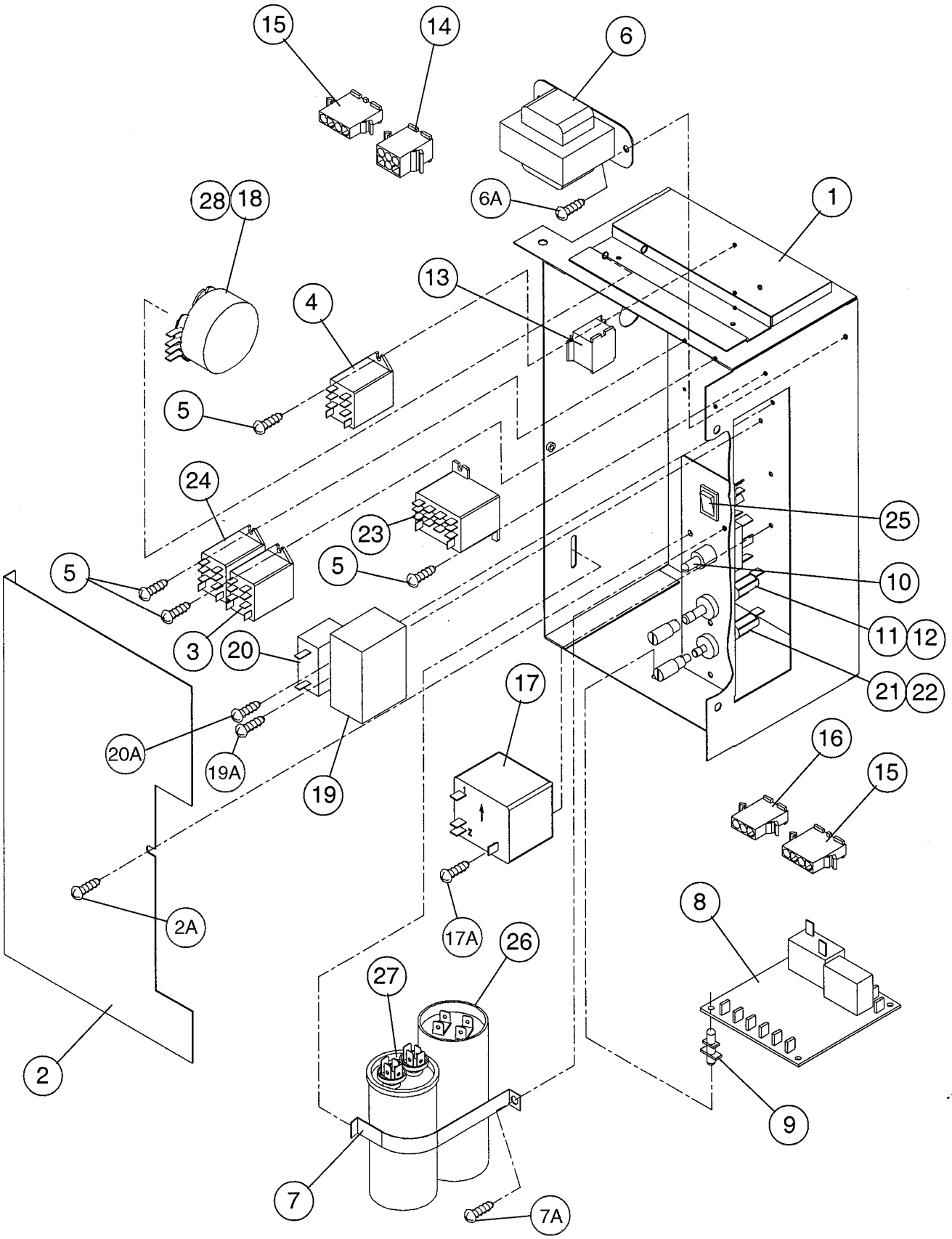

MODEL: F-1001MAF(-C) TITLE: E. CONTROL BOX ASSEMBLY								
INDEX NO.	DESCRIPTION	MATERIAL OR MODEL NUMBER	PART NUMBER	REQUIRED NUMBER				
				K-0	L-1			
1	CONTROL BOX	GS	2A1880G01	1	1			
2	COVER-CONTROL BOX	GS	3A0411-01	1	1			
2A	TRUSS HEAD SCREW	4X8	7C31-0408	1	1			
3	RELAY	LY-1F, AC120V	418271-03	1	1			
4	RELAY	LY-2F, AC24V	406132-03	1	1			
5	TAPPING SCREW	3 x 8	431415-01	8	8			
6	TRANSFORMER	BE1416225GEK 120/24V, 1A	4A0557-01	1	1			
6A	T2 SCREW	4X8	7P31-0408	2	2			
7	STRAP	GS	434580-01	1	1			
7A	T2 SCREW	4X8	7P31-0408	2	2			
8	TIMER BOARD	H2AA144C01	437305-01	1	1			
9	BOARD SUPPORT	CBLS37-N	4A0336-03	4	4			
10	TOGGLE SWITCH	7599K1	4A2332-01	1	1			
11	FUSE HOLDER	HTB921, 250V, 1A	4A0892-01	1	1			
12	FUSE	AGC-1, 250V, 1A	4A0893-01	1	1			
13	12P PLUG HOUSING	3191-12P	412832-04	1	1			
14	6P PLUG HOUSING	3191-06P	412832-03	1	1			
15	4P PLUG HOUSING	3191-04P	412832-05	2	2			
16	3P PLUG HOUSING	3191-03P	412832-06	1	1			
17	STARTER	3ARR3CT24S5	4A1107-13	1	1			
17A	T2 SCREW	4X8	7P31-0408	1	1			
18	TIMER	-	4A0889-01	1	-			
		-	4A2157-01		1			
19	CAPACITOR (GM)	24MFD	4A2273-01	1	1			
19A	T2 SCREW	4X8	7P31-0408	1	1			
20	CAPACITOR (FM)	5MFD	443192-02	1	1			
20A	T2 SCREW	4X8	7P31-0408	1	1			

MODEL: **F-1001MAF(-C)** TITLE: **E. CONTROL BOX ASSEMBLY**								
INDEX NO.	DESCRIPTION	MATERIAL OR MODEL NUMBER	PART NUMBER	REQUIRED NUMBER				
				K-0	L-1			
21	FUSE	GMD-3A, 250V	4A0893-06	1	1			
22	FUSE HOLDER	HTB92M	4A0892-02	1	1			
23	RELAY	LY-4F,AC24V	406133-04	1	1			
24	RELAY	LY1F-HSD, AC220/240V	418271-05	1	1			
25	ROCKER SWITCH	62111929-0-0-N	4A0558-01	1	1			
26	CAPACITOR - STARTING	3535B5A0108A250B8	3A0076-02	1	1			
27	CAPACITOR	X386S(HG02)	439943-02	1	1			
28	SCREW	32 x 3/8	4A0898-01	2	2			

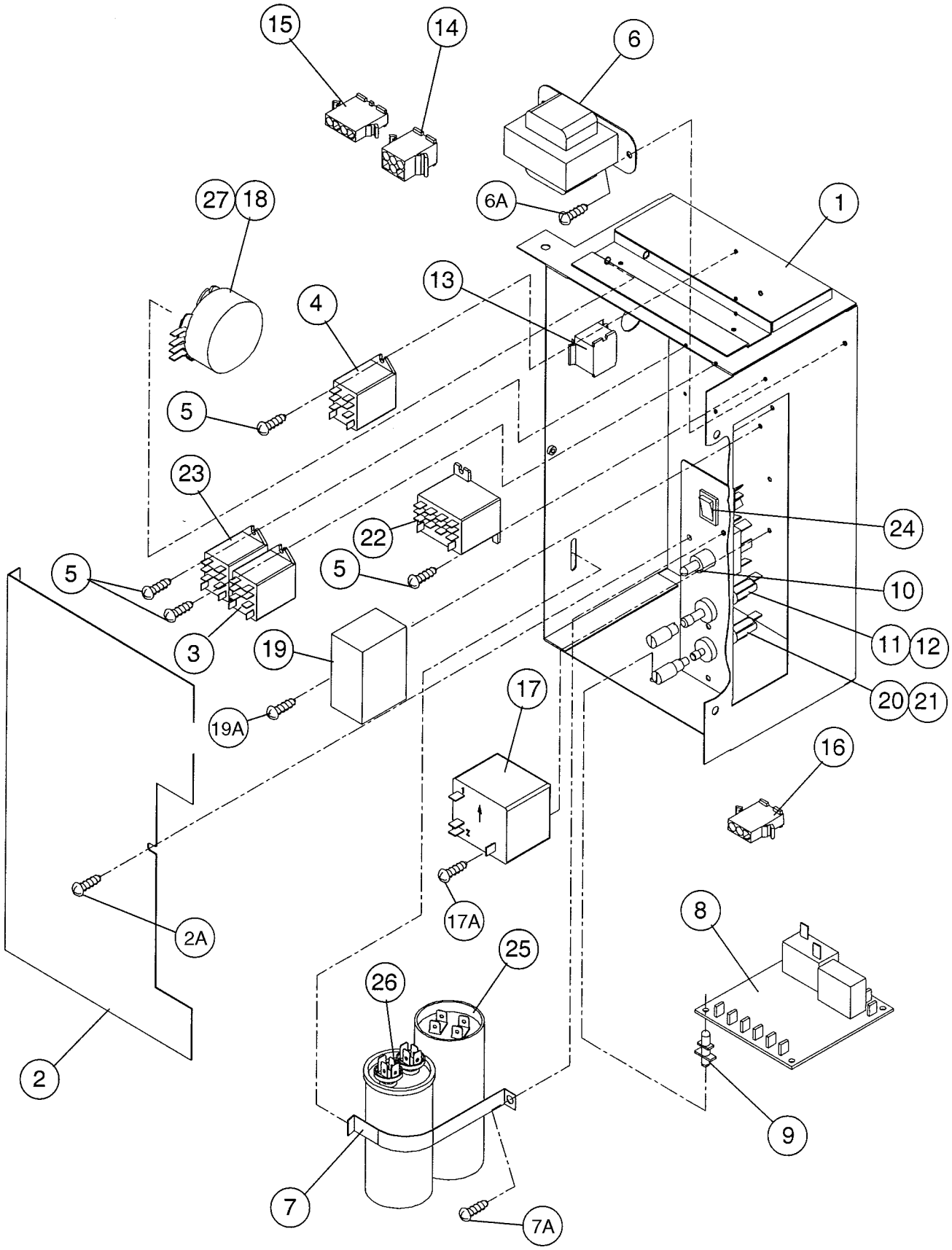
15
14
6
27
18
6A
1
13
4
5
23
22
24
5
5
10
3
19
11
12
20
21
17
19A
16
17A
8
2A
25
26
2
9
7
7A

MODEL: F-1001MWF(-C), MRF(-C) TITLE: E. CONTROL BOX ASSEMBLY								
INDEX NO.	DESCRIPTION	MATERIAL OR MODEL NUMBER	PART NUMBER	REQUIRED NUMBER				
				K-0	L-1			
1	CONTROL BOX	GS	2A1880G01	1	1			
2	COVER-CONTROL BOX	GS	3A0411-01	1	1			
	TRUSS HEAD SCREW	4X8	7C31-0408	2	2			
3	RELAY	LY-1F, AC120V	418271-03	1	1			
4	RELAY	LY-2F, AC24V	406132-03	1	1			
5	TAPPING SCREW	3 x 8	431415-01	8	8			
6	TRANSFORMER	BE1416225GEK 120/24V, 1A	4A0557-01	1	1			
6A	T2 SCREW	4X8	7P31-0408	2	2			
7	STRAP	GS	434580-01	1	1			
7A	T2 SCREW	4X8	7P31-0408	2	2			
8	TIMER BOARD	H2AA144C01	437305-01	1	1			
9	BOARD SUPPORT	CBLS37-N	4A0336-03	4	4			
10	TOGGLE SWITCH	7599K1	4A2332-01	1	1			
11	FUSE HOLDER	HTB921, 250V, 1A	4A0892-01	1	1			
12	FUSE	AGC-1, 250V, 1A	4A0893-01	1	1			
13	12P PLUG HOUSING	3191-12P	412832-04	1	1			
14	6P PLUG HOUSING	3191-06P	412832-03	1	1			
15	4P PLUG HOUSING	3191-04P	412832-05	2	2			
16	3P PLUG HOUSING	3191-03P	412832-06	1	1			
17	STARTER	3ARR3CT24S5	4A1107-13	1	1			
17A	T2 SCREW	4X8	7P31-0408	1	1			
18	TIMER	-	4A0889-01	1	-			
		-	4A2157-01		1			
19	CAPACITOR (GM)	24MFD	4A2273-01	1	1			
19A	T2 SCREW	4X8	7P31-0408	1	1			
20	FUSE	GMD-3A, 250V	4A0893-06	1	1			

MODEL: **F-1001MWF(-C), MRF(-C)** TITLE: **E. CONTROL BOX ASSEMBLY**								
INDEX NO.	DESCRIPTION	MATERIAL OR MODEL NUMBER	PART NUMBER	REQUIRED NUMBER				
				K-0	L-1			
21	FUSE HOLDER	HTB92M	4A0892-02	1	1			
22	RELAY	LY-4F,AC24V	406133-04	1	1			
23	RELAY	LY1F-HSD, AC220/240V	418271-05	1	1			
24	ROCKER SWITCH	62111929-0-0-N	4A0558-01	1	1			
25	CAPACITOR - STARTING	3535B5A0108A250B8	3A0076-02	1	1			
26	CAPACITOR	X386S(HG02)	439943-02	1	1			
27	SCREW	32 x 3/8	4A0898-01	2	2			

E. CONTROL BOX ASSEMBLY

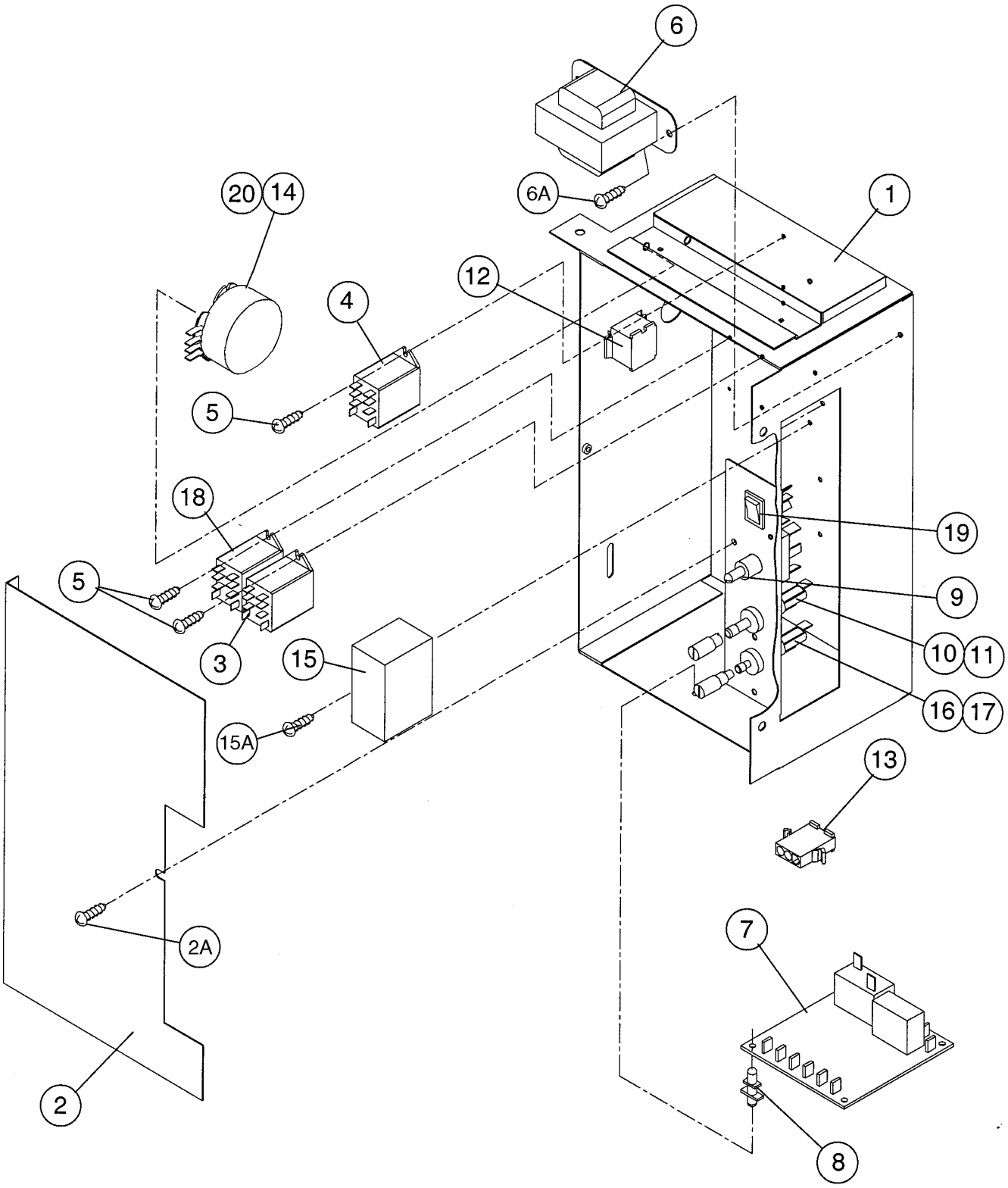

MODEL: **F-1001MLF(-C)**	TITLE: **E. CONTROL BOX ASSEMBLY**							
INDEX NO.	DESCRIPTION	MATERIAL OR MODEL NUMBER	PART NUMBER	REQUIRED NUMBER				
				K-0	L-1			
1	CONTROL BOX	GS	2A1880G01	1	1			
2	COVER-CONTROL BOX	GS	3A0411-01	1	1			
2A	TRUSS HEAD SCREW	4X8	7C31-0408	2	2			
3	RELAY	LY-2F, AC120V	406132-07	1	1			
4	RELAY	LY-2F, AC24V	406132-03	1	1			
5	TAPPING SCREW	3 x 8	431415-01	6	6			
6	TRANSFORMER	BE1416225GEK 120/24V, 1A	4A0557-01	1	1			
6A	T2 SCREW	4X8	7P31-0408	2	2			
7	TIMER BOARD	H2AA144C01	437305-01	1	1			
8	BOARD SUPPORT	CBLS37-N	4A0336-03	4	4			
9	TOGGLE SWITCH	7599K1	4A2332-01	1	1			
10	FUSE HOLDER	250V, 1A	4A0892-01	1	1			
11	FUSE	250V, 1A	4A0893-01	1	1			
12	12P PLUG HOUSING	3191-12P	412832-04	1	1			
13	3P PLUG HOUSING	3191-03P	412832-06	1	1			
14	TIMER	-	4A0889-01	1	-			
		-	4A2157-01		1			
15	CAPACITOR (GM)	24MFD	4A2273-01	1	1			
15A	T2 SCREW	4X8	7P31-0408	1	1			
16	FUSE	GMD-3A, 250V	4A0893-06	1	1			
17	FUSE HOLDER	HTB-92M	4A0892-02	1	1			
18	RELAY	LY1F-HSD, AC220/240V	418271-05	1	1			
19	ROCKER SWITCH	62111929-0-0-N	4A0558-01	1	1			
20	SCREW	32 x 3/8	4A0898-01	2	2			

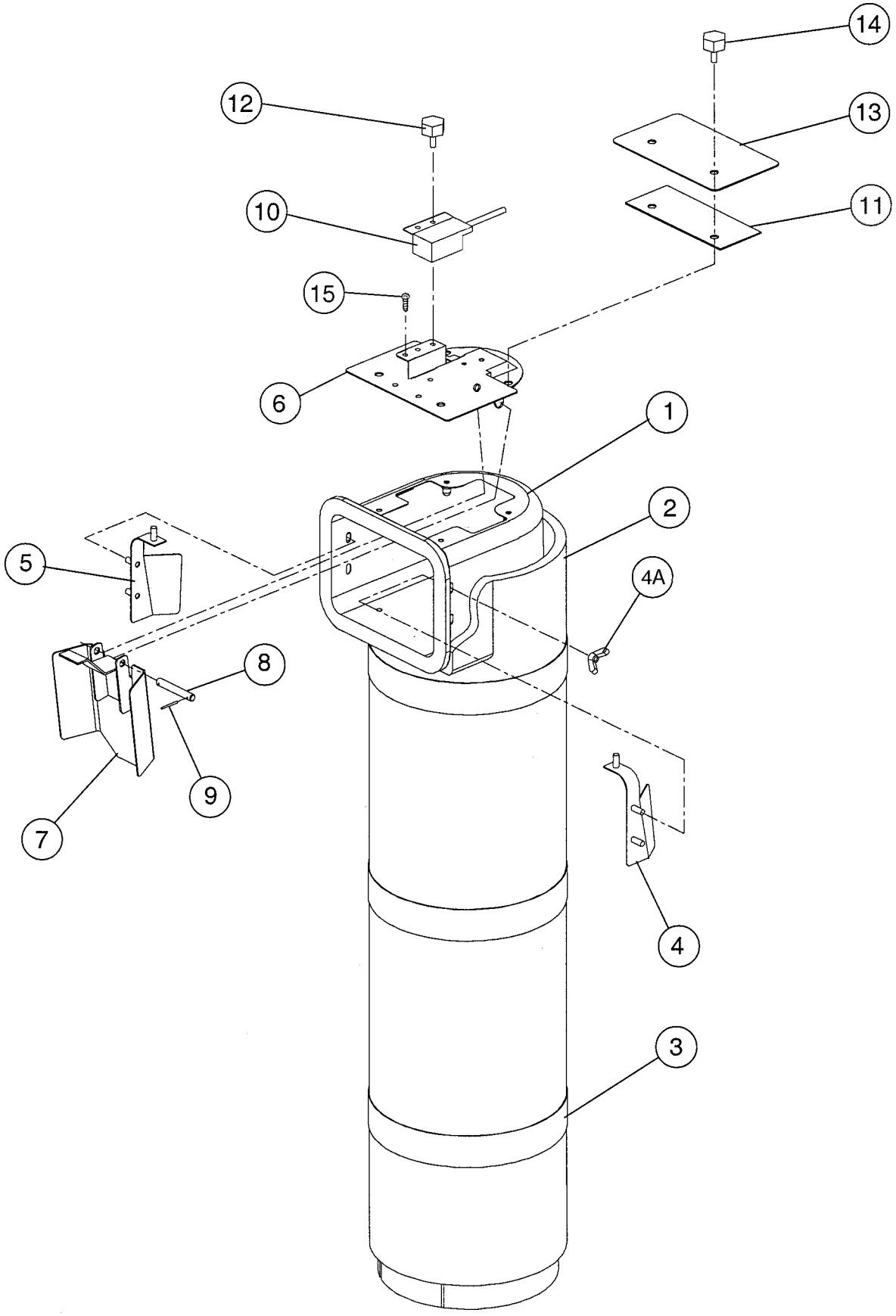
14
12
13
10
11
15
6
1
2
5
4A
8
9
7
4
3

MODEL: **F-1001MAF(-C), MWF(-C), MRF(-C), MLF(-C)** TITLE: **F. CHUTE ASSEMBLY**								
INDEX NO.	DESCRIPTION	MATERIAL OR MODEL NUMBER	PART NUMBER	REQUIRED NUMBER				
				K-0 L-1				
1	CHUTE	PE	2A1919-01	1				
2	INSULATION-CHUTE	PE FOAM	2A1920-01	1				
3	TIE	PA	436531G01	3				
4	BAFFLE-CHUTE (A)	SS	3A0400G01	1				
4A	WING NUT	4, SS	7E12-0400	6				
5	BAFFLE-CHUTE (B)	SS	3A0399G01	1				
6	BIN CONTROL	SS	3A1744G01	1				
7	ACTUATOR	SS	436848G01	1				
8	SHAFT	SS	436851-01	1				
9	SNAP PIN	SS,SSP-5	715S-0005	2				
10	PROXIMITY SWITCH	RS-601	4A2033-01	1				
11	PACKING	EPDM	441217-01	1				
12	THUMBSCREW	ABS,SS	415949G04	2				
13	PLATE	SS	4A2039-01	1				
14	THUMBSCREW	ABS,SS	415949G09	2				
15	TRUSS HEAD SCREW	4X8, SS	7C32-0408	1				

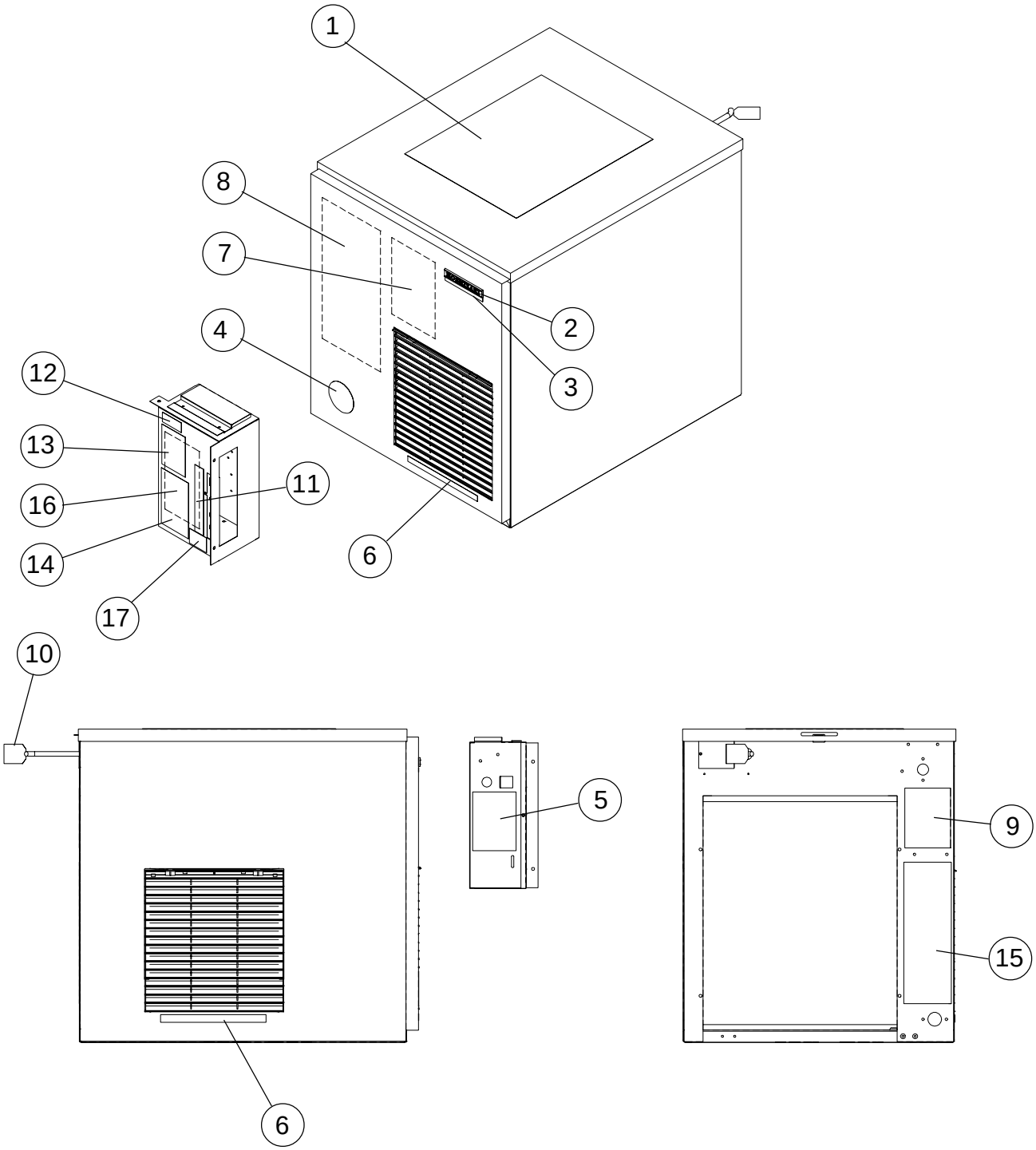
1
8
7
2
4
3
12
13
11
16
14
6
17
10
5
9
15
6

MODEL: **F-1001MAF**		TITLE: **G. LABEL LOCATION**						
INDEX NO.	DESCRIPTION	MATERIAL OR MODEL NUMBER	PART NUMBER	REQUIRED NUMBER				
				K-0 L-1				
1	INSTRUCTION SHEET	PAPER	2A1054-01	1				
2	EMBLEM	PETP FILM	4A0560-01	1				
3	MODEL NUMBER LABEL	PETP FILM	4A2233-01	1				
4	LABEL-PENGUIN-HA-R	PETP FILM	4A0526-01	1				
5	RATING LABEL	PES FILM	3A1717-01	1				
6	LABEL-AIR FILTER	PETP FILM	426177-01	2				
7	INSTRUCTION LABEL	PVC FILM	326371-01	1				
8	LABEL-CLEANING	PVC FILM	326370-01	1				
9	NAMEPLATE	PES FILM	3A1716-01	1				
10	TAG-WARNING:ELECTRICAL CONNECTION	PAPER	428430-01	1				
11	CONTROL LABEL	PVC FILM	4A2234-01	1				
12	LABEL-R404A	PES FILM	4A0960-01	1				
13	CAUTION LABEL (E)	PVC FILM	439145-01	1				
14	WIRING LABEL	PVC FILM	2A1972-01	1				
15	INSTRUCTION SHEET	PAPER	433523-01	1				
16	CAUTION LABEL (H)	PVC FILM	439148-01	1				
17	LABEL (GM) - FUSE	PVC FILM	4A2303-01	1				

MODEL: **F-1001MAF-C** TITLE: **G. LABEL LOCATION**

INDEX NO.	DESCRIPTION	MATERIAL OR MODEL NUMBER	PART NUMBER	REQUIRED NUMBER				
				K-0 L-1				
1	INSTRUCTION SHEET	PAPER	2A1054-01	1				
2	EMBLEM	PETP FILM	4A0560-01	1				
3	MODEL NUMBER LABEL	PETP FILM	4A2233-05	1				
4	LABEL-PENGUIN-HA-R	PETP FILM	4A0526-01	1				
5	RATING LABEL	PES FILM	3A1717-05	1				
6	LABEL-AIR FILTER	PETP FILM	426177-01	2				
7	INSTRUCTION LABEL	PVC FILM	326371-01	1				
8	LABEL-CLEANING	PVC FILM	326370-01	1				
9	NAMEPLATE	PES FILM	3A1716-05	1				
10	TAG-WARNING:ELECTRICAL CONNECTION	PAPER	428430-01	1				
11	CONTROL LABEL	PVC FILM	4A2234-01	1				
12	LABEL-R404A	PES FILM	4A0960-01	1				
13	CAUTION LABEL (E)	PVC FILM	439145-01	1				
14	WIRING LABEL	PVC FILM	2A1972-01	1				
15	INSTRUCTION SHEET	PAPER	433523-01	1				
16	CAUTION LABEL (H)	PVC FILM	439148-01	1				
17	LABEL (GM) - FUSE	PVC FILM	4A2303-01	1				

G. LABEL LOCATION

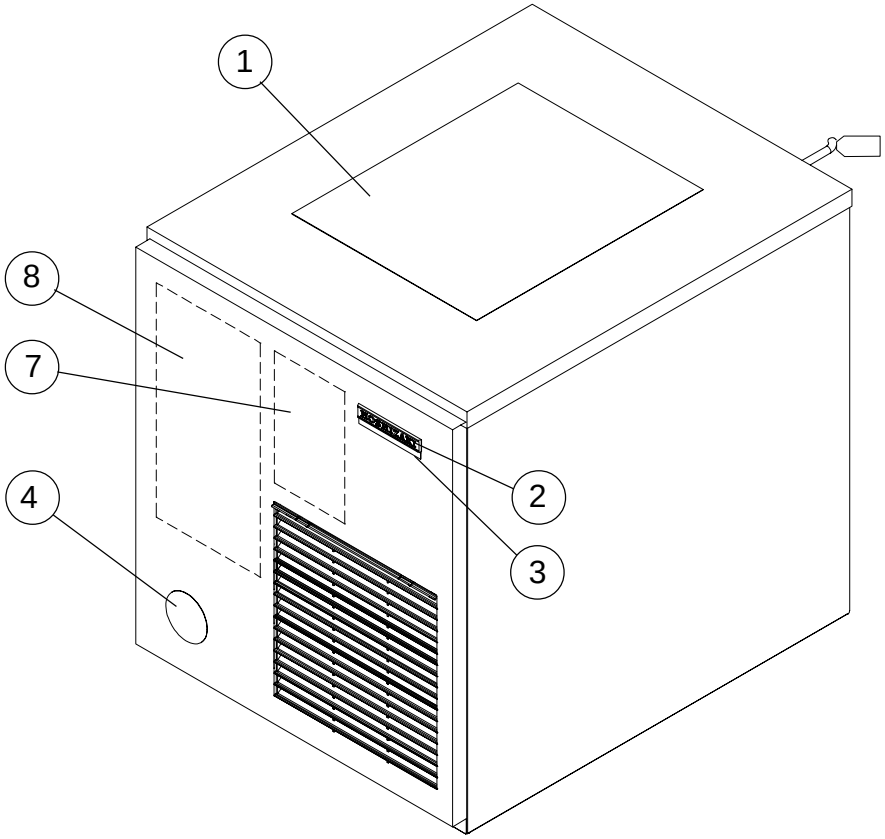

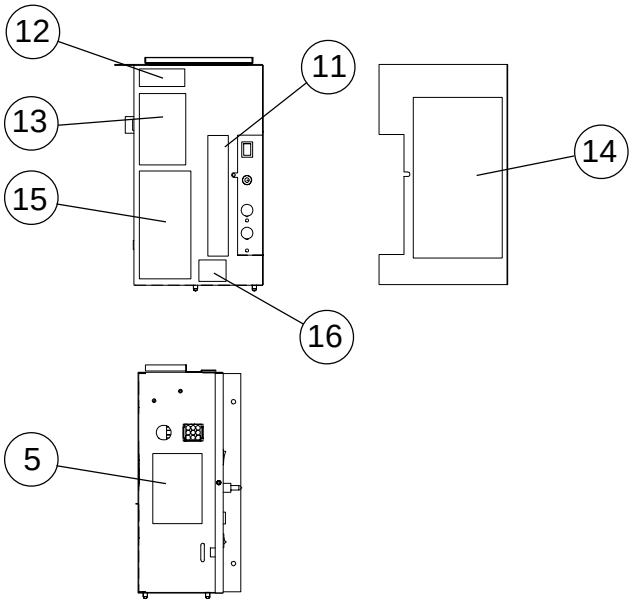

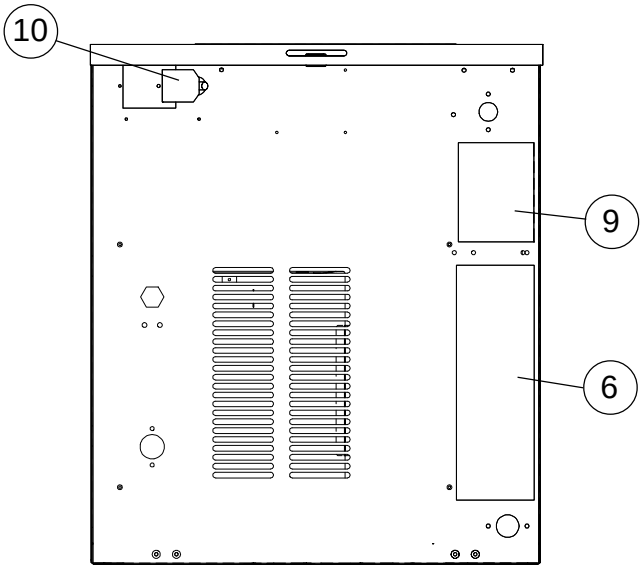

MODEL: **F-1001MWF** TITLE: **G. LABEL LOCATION**								
INDEX NO.	DESCRIPTION	MATERIAL OR MODEL NUMBER	PART NUMBER	REQUIRED NUMBER				
				K-0 L-1				
1	INSTRUCTION SHEET	PAPER	2A1054-01	1				
2	EMBLEM	PETP FILM	4A0560-01	1				
3	MODEL NUMBER LABEL	PETP FILM	4A2233-02	1				
4	LABEL-PENGUIN-HA-R	PETP FILM	4A0526-01	1				
5	RATING LABEL	PES FILM	3A1717-02	1				
6	INSTRUCTION SHEET	PAPER	433523-01	1				
7	INSTRUCTION LABEL	PVC FILM	326371-01	1				
8	LABEL-CLEANING	PVC FILM	326370-01	1				
9	NAMEPLATE	PES FILM	3A1716-02	1				
10	TAG-WARNING:ELECTRICAL CONNECTION	PAPER	428430-01	1				
11	CONTROL LABEL	PVC FILM	4A2234-01	1				
12	LABEL-R404A	PES FILM	4A0960-01	1				
13	CAUTION LABEL (E)	PVC FILM	439145-01	1				
14	WIRING LABEL	PVC FILM	2A1972-01	1				
15	CAUTION LABEL (H)	PVC FILM	439148-01	1				
16	LABEL (GM) - FUSE	PVC FILM	4A2303-01	1				

MODEL: **F-1001MWF-C** TITLE: **G. LABEL LOCATION**								
INDEX NO.	DESCRIPTION	MATERIAL OR MODEL NUMBER	PART NUMBER	REQUIRED NUMBER				
				K-0 L-1				
1	INSTRUCTION SHEET	PAPER	2A1054-01	1				
2	EMBLEM	PETP FILM	4A0560-01	1				
3	MODEL NUMBER LABEL	PETP FILM	4A2233-06	1				
4	LABEL-PENGUIN-HA-R	PETP FILM	4A0526-01	1				
5	RATING LABEL	PES FILM	3A1717-06	1				
6	INSTRUCTION SHEET	PAPER	433523-01	1				
7	INSTRUCTION LABEL	PVC FILM	326371-01	1				
8	LABEL-CLEANING	PVC FILM	326370-01	1				
9	NAMEPLATE	PES FILM	3A1716-06	1				
10	TAG-WARNING:ELECTRICAL CONNECTION	PAPER	428430-01	1				
11	CONTROL LABEL	PVC FILM	4A2234-01	1				
12	LABEL-R404A	PES FILM	4A0960-01	1				
13	CAUTION LABEL (E)	PVC FILM	439145-01	1				
14	WIRING LABEL	PVC FILM	2A1972-01	1				
15	CAUTION LABEL (H)	PVC FILM	439148-01	1				
16	LABEL (GM) - FUSE	PVC FILM	4A2303-01	1				

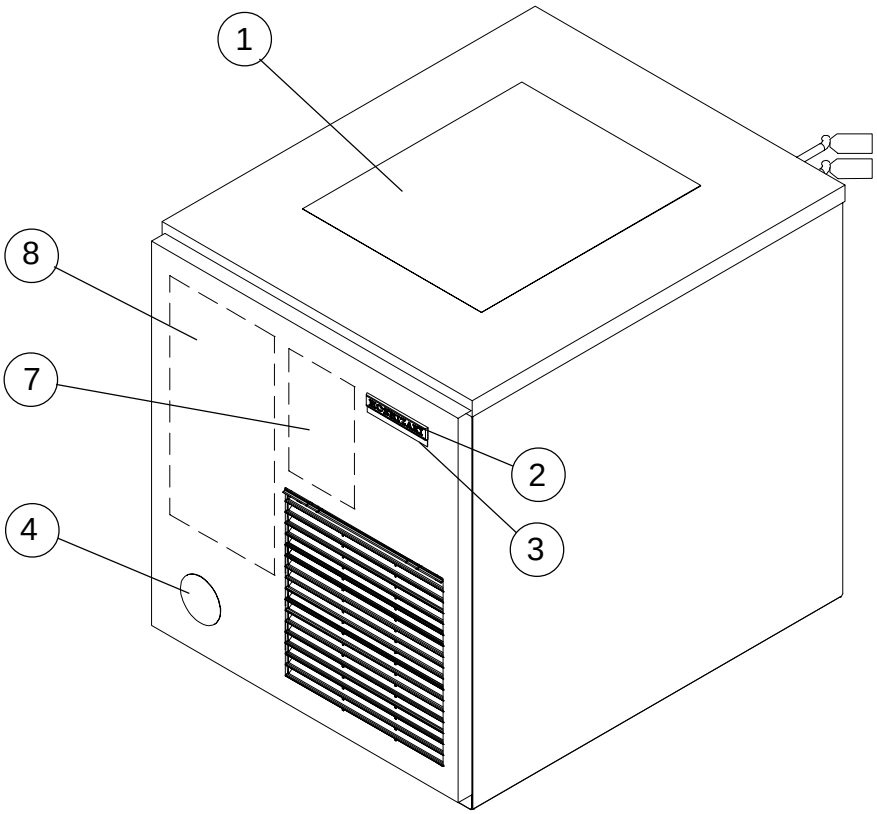
1
8
7
2
4
3

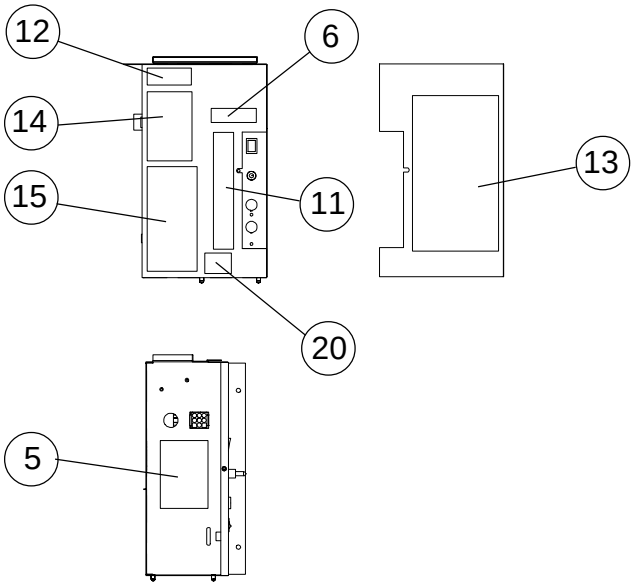
12
6
14
13
15
11
20
5

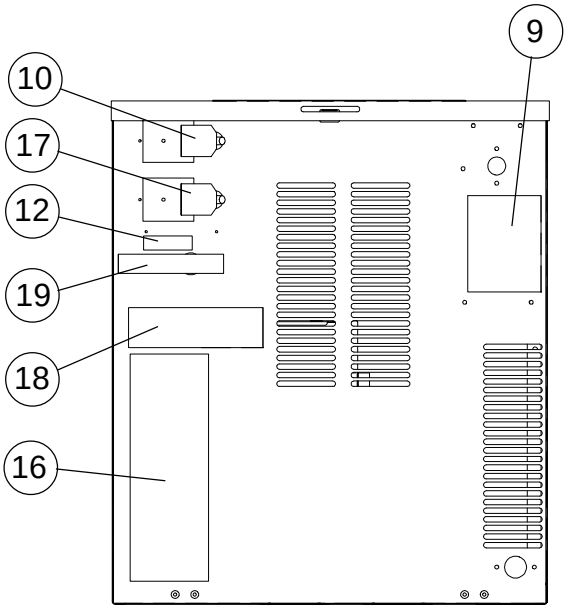
9
10
17
12
19
18
16

MODEL: **F-1001MRF**	TITLE: **G. LABEL LOCATION**							
INDEX NO.	DESCRIPTION	MATERIAL OR MODEL NUMBER	PART NUMBER	REQUIRED NUMBER				
				K-0 L-1				
1	INSTRUCTION SHEET	PAPER	2A1054-01	1				
2	EMBLEM	PETP FILM	4A0560-01	1				
3	MODEL NUMBER LABEL	PETP FILM	4A2233-03	1				
4	LABEL-PENGUIN-HA-R	PETP FILM	4A0526-01	1				
5	RATING LABEL	PES FILM	3A1717-03	1				
6	LABEL-CHARGE	PES FILM	4A1399-02	1				
7	INSTRUCTION LABEL	PVC FILM	326371-01	1				
8	LABEL-CLEANING	PVC FILM	326370-01	1				
9	NAMEPLATE	PES FILM	3A1716-03	1				
10	TAG-WARNING: ELECTRICAL CONNECTION	PAPER	428430-01	1				
11	CONTROL LABEL	PVC FILM	4A2234-01	1				
12	LABEL-R404A	PES FILM	4A0960-01	1				
13	WIRING LABEL	PVC FILM	2A1972-01	1				
14	CAUTION LABEL(E)	PVC FILM	439145-01	1				
15	CAUTION LABEL(H)	PVC FILM	439148-01	1				
16	INSTRUCTION SHEET	PAPER	433523-01	1				
17	TAG-FAN MOTOR LEADS	PAPER	4A1494-01	1				
18	CAUTION - REMOTE LABEL	PVC FILM	4A1491-01	1				
19	CAUTION TAPE - 404A	TAPE	4A1535L01	1				
20	LABEL (GM) - FUSE	PVC FILM	4A2303-01	1				

MODEL: **F-1001MRF-C** TITLE: **G. LABEL LOCATION**								
INDEX NO.	DESCRIPTION	MATERIAL OR MODEL NUMBER	PART NUMBER	REQUIRED NUMBER				
				K-0 L-1				
1	INSTRUCTION SHEET	PAPER	2A1054-01	1				
2	EMBLEM	PETP FILM	4A0560-01	1				
3	MODEL NUMBER LABEL	PETP FILM	4A2233-07	1				
4	LABEL-PENGUIN-HA-R	PETP FILM	4A0526-01	1				
5	RATING LABEL	PES FILM	3A1717-07	1				
6	LABEL-CHARGE	PES FILM	4A1399-02	1				
7	INSTRUCTION LABEL	PVC FILM	326371-01	1				
8	LABEL-CLEANING	PVC FILM	326370-01	1				
9	NAMEPLATE	PES FILM	3A1716-07	1				
10	TAG-WARNING: ELECTRICAL CONNECTION	PAPER	428430-01	1				
11	CONTROL LABEL	PVC FILM	4A2234-01	1				
12	LABEL-R404A	PES FILM	4A0960-01	1				
13	WIRING LABEL	PVC FILM	2A1972-01	1				
14	CAUTION LABEL(E)	PVC FILM	439145-01	1				
15	CAUTION LABEL(H)	PVC FILM	439148-01	1				
16	INSTRUCTION SHEET	PAPER	433523-01	1				
17	TAG-FAN MOTOR LEADS	PAPER	4A1494-01	1				
18	CAUTION - REMOTE LABEL	PVC FILM	4A1491-01	1				
19	CAUTION TAPE - 404A	TAPE	4A1535L01	1				
20	LABEL (GM) - FUSE	PVC FILM	4A2303-01	1				

G. LABEL LOCATION

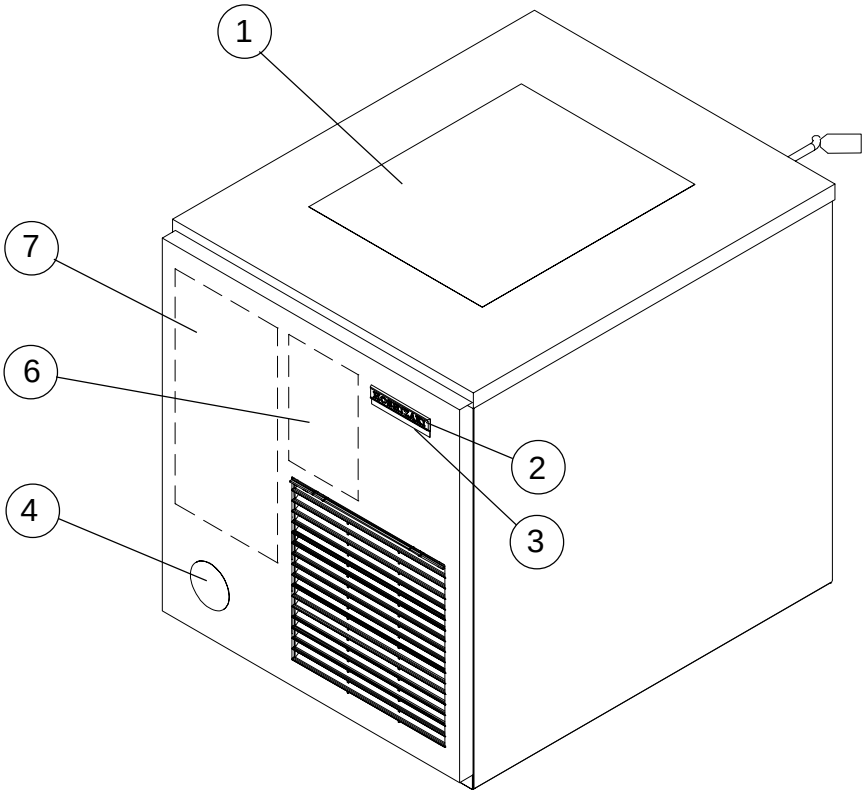

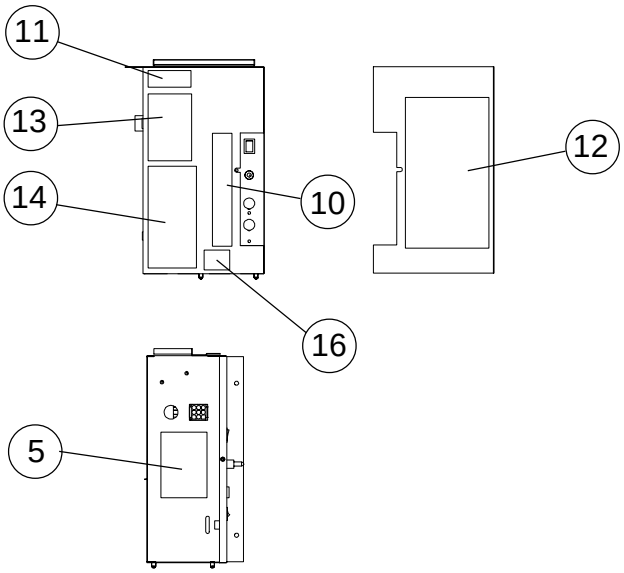

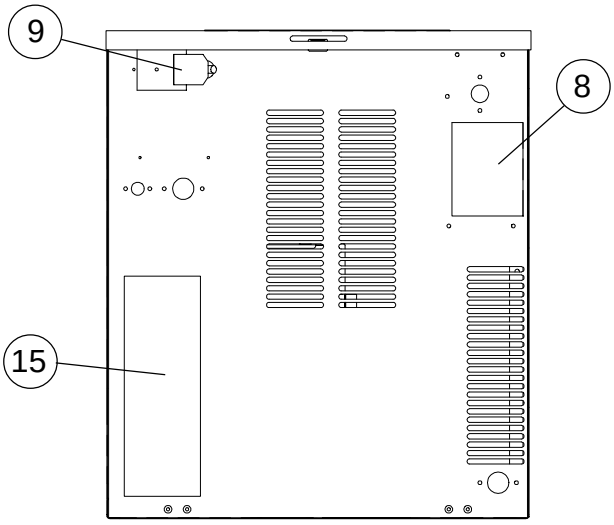

MODEL: **F-1001MLF**	TITLE: **G. LABEL LOCATION**							
INDEX NO.	DESCRIPTION	MATERIAL OR MODEL NUMBER	PART NUMBER	REQUIRED NUMBER				
				K-0 L-1				
1	INSTRUCTION SHEET	PAPER	2A1054-01	1				
2	EMBLEM	PETP FILM	4A0560-01	1				
3	MODEL NUMBER LABEL	PETP FILM	4A2233-04	1				
4	LABEL-PENGUIN-HA-R	PETP FILM	4A0526-01	1				
5	RATING LABEL	PES FILM	3A1717-04	1				
6	INSTRUCTION LABEL	PVC FILM	326371-01	1				
7	LABEL-CLEANING	PVC FILM	326370-01	1				
8	NAMEPLATE	PES FILM	3A1716-04	1				
9	TAG-WARNING: ELECTRICAL CONNECTION	PAPER	435005-01	1				
10	CONTROL LABEL	PVC FILM	4A2234-01	1				
11	LABEL-R404A	PES FILM	4A0960-01	1				
12	WIRING LABEL	PVC FILM	2A1973-01	1				
13	CAUTION LABEL(E)	PVC FILM	439145-01	1				
14	CAUTION LABEL(H)	PVC FILM	439148-01	1				
15	INSTRUCTION SHEET	PAPER	433523-01	1				
16	LABEL (GM) - FUSE	PVC FILM	4A2303-01	1				

MODEL: **F-1001MLF-C** TITLE: **G. LABEL LOCATION**								
INDEX NO.	DESCRIPTION	MATERIAL OR MODEL NUMBER	PART NUMBER	REQUIRED NUMBER				
				K-0 L-1				
1	INSTRUCTION SHEET	PAPER	2A1054-01	1				
2	EMBLEM	PETP FILM	4A0560-01	1				
3	MODEL NUMBER LABEL	PETP FILM	4A2233-08	1				
4	LABEL-PENGUIN-HA-R	PETP FILM	4A0526-01	1				
5	RATING LABEL	PES FILM	3A1717-08	1				
6	INSTRUCTION LABEL	PVC FILM	326371-01	1				
7	LABEL-CLEANING	PVC FILM	326370-01	1				
8	NAMEPLATE	PES FILM	3A1716-08	1				
9	TAG-WARNING: ELECTRICAL CONNECTION	PAPER	435005-01	1				
10	CONTROL LABEL	PVC FILM	4A2234-01	1				
11	LABEL-R404A	PES FILM	4A0960-01	1				
12	WIRING LABEL	PVC FILM	2A1973-01	1				
13	CAUTION LABEL(E)	PVC FILM	439145-01	1				
14	CAUTION LABEL(H)	PVC FILM	439148-01	1				
15	INSTRUCTION SHEET	PAPER	433523-01	1				
16	LABEL (GM) - FUSE	PVC FILM	4A2303-01	1				

MODEL: **F-1001MAF(-C), MWF(-C), MRF(-C), MLF(-C)** TITLE: **H. ACCESSORIES**								
INDEX NO.	DESCRIPTION	MATERIAL OR MODEL NUMBER	PART NUMBER	REQUIRED NUMBER				
				K-0 L-1				
1	INSTRUCTION MANUAL	PAPER	91A2CM10A	1				
2	LABEL-FASTENER	PAPER	427122-01	1				
3	UNIVERSAL BRACE	GS	4A0363-01	2				