HOSHIZAKI

Service Manual

Modular Flaker

Models
F-422MAK(-C)
F-622MAK-C, MWK-C, MRKZ-C
F-822MAK(-C), MWK(-C)
F-1022MAK(-C)(-SC), MWK(-C)
F-1022MRKZ(-C)(-SC)(-CB), MLKZ

hoshizakiamerica.com

Number: 73264
Issued: 1-2-2026

⚠ WARNING

Only qualified service technicians should install and service the appliance. To obtain the name and phone number of your local Hoshizaki Certified Service Representative, visit www.hoshizakiamerica.com. No service should be undertaken until the technician has thoroughly read this Service Manual. Failure to service and maintain the appliance in accordance with this manual will adversely affect safety, performance, component life, and warranty coverage and may result in costly water damage. Proper installation is the responsibility of the installer. Product failure or property damage due to improper installation is not covered under warranty.

Hoshizaki provides this manual primarily to assist qualified service technicians in the service of the appliance.

Should the reader have any questions or concerns which have not been satisfactorily addressed, please call, send an e-mail message, or write to the Hoshizaki Technical Support Department for assistance.

Phone: 1-800-233-1940; (770) 487-2331

E-mail: tech-support@hoshizaki.com

HOSHIZAKI AMERICA, INC.
618 Highway 74 South
Peachtree City, GA 30269
Attn: Hoshizaki Technical Support Department

NOTE: To expedite assistance, all correspondence/communication MUST include the following information:

- Model Number _____
- Serial Number _____
- Complete and detailed explanation of the problem.

IMPORTANT
This manual should be read carefully before the appliance is serviced. Read the warnings and guidelines contained in this manual carefully as they provide essential information for the continued safe use, service, and maintenance of the appliance. Retain this manual for any further reference that may be necessary.

CONTENTS

Important Safety Information 5
I. Construction and Water/Refrigeration Circuit Diagram 10
A. Construction 10
1. Icemaker 10
a) Air-Cooled Models 10
b) Water-Cooled Models 11
c) Remote-Cooled Models 12
d) Low-Side, Parallel Rack System Models 13
2. Ice Making Assembly 14
3. Water/Refrigeration Circuit Diagram 15
a) Air-Cooled Models 15
b) Water-Cooled Models 16
c) Remote Air-Cooled Models 17
d) Low-Side, Parallel Rack System Models 18
II. Sequence of Operation and Service Diagnosis 19
A. Sequence of Operation Flow Chart 19
1. Icemaker Flow Chart 19
2. Bin Control Shutdown Flow Chart 20
III. Service Diagnosis, Refrigeration Circuit Service, and Component Service 21
A. Safety Precautions When Servicing | Précautions de sécurité lors de l'entretien 21
1. English 21
2. Français 26
B. Service Diagnosis 31
1. Ice Production Check 32
2. Diagnostic Procedure 32
3. Freeze-Up Detection 37
4. Control Board Check 38
5. Bin Control Check and Adjustment 43
6. Float Switch Check and Cleaning 50
7. Diagnostic Tables 52
8. Control Board and Control Board Layout 55
9. LED Lights and Audible Alarm Safeties 57
10. Ice Purge Cycle Bypass 58
11. Controls and Adjustments 59
12. Power Switch and Control Switch 61
C. Refrigeration Circuit Service 62
D. Component Service Information 68
IV. Maintenance 79
V. Preparing the Appliance for Periods of Non-Use 81
VI. Decommissioning and Disposal 82

VII. Technical Information 86
A. Specification and Performance Data 86
1. F-422MAK 86
2. F-422MAK-C 87
3. F-622MAK-C 88
4. F-622MWK-C 89
5. F-622MRKZ-C 90
6. F-822MAK 91
7. F-822MAK-C 92
8. F-822MWK 93
9. F-822MWK-C 94
10. F-1022MAK 95
11. F-1022MAK-C(-CB) 96
12. F-1022MAK-SC 97
13. F-1022MWK 98
14. F-1022MWK-C 99
15. F-1022MRKZ 100
16. F-1022MRKZ-C(-CB) 101
17. F-1022MRKZ(-SC) 102
18. F-1022MLKZ 103
19. F-1022MLKZ-C 104
B. Wiring Diagrams 105
1. F-422MAK(-C) 105
2. F-622M_K-C 106
3. F-622MRKZ-C 107
4. F-822M_K(-C) 108
5. F-1022MAK-C(-SC) 109
6. F-1022MRKZ(-C)(-SC)(-CB) 110
7. F-1022MLKZ(-C) 111

Important Safety Information

Throughout this manual, notices appear to bring your attention to situations which could result in death, serious injury, damage to the appliance, or damage to property. Models covered in this manual utilize either R-290 or R-448A refrigerant. See the nameplate or the Electrical and Refrigerant Data section of this manual for the refrigerant type in your model.

	R-290 Class A3 Flammable Refrigerant Used*
! DANGER	**Indicates a hazardous situation that, if not avoided, will result in death or serious injury.**
⚠ WARNING	**Indicates a hazardous situation that, if not avoided, could result in death or serious injury.**
NOTICE	**Indicates a situation that, if not avoided, could result in damage to the appliance or property.**
IMPORTANT	**Indicates important information about the use and care of the appliance.**

! DANGER

Risk of Fire or Explosion
Flammable Refrigerant Used*

- Qualified service technicians are those having the appropriate technical training and experience necessary to be aware of hazards to which they are exposed in performing a task and of measures necessary to minimize the danger to themselves or other persons.
- No service should be undertaken until the technician has thoroughly read this Service Manual. All safety precautions must be followed.
- This appliance to be installed in accordance with the Safety Standard for Refrigeration Systems ANSI/ASHRAE 15.
- Follow handling instructions carefully in compliance with national regulations.
- Do not use mechanical devices or other means to accelerate the defrosting process or to clean, other than those recommended by the manufacturer.
- Do not puncture refrigerant tubing. Risk of fire or explosion due to puncture of refrigerant tubing; follow handling instructions carefully.
- Servicing shall be done by trained service personnel with certified competence in handling flammable refrigerants to minimize the risk of possible ignition due to incorrect parts or improper service.*
- Component parts shall be replaced with like components. so as to minimize the risk of possible ignition due to incorrect parts.*
- Dispose of properly in accordance with federal or local regulations.
- Do not pierce or burn.
- Be aware that refrigerants may not contain an odor.
- Do not damage the refrigeration circuit.
- See nameplate for R-290 refrigerant charge:*
  - If greater than 114 g (4 oz.), do not install in public corridor or lobby.
  - If greater than 152 g (5.3 oz.), do not install within 6 m (20 ft) of open flame.
- The appliance shall be stored in a room without continuously operating ignition sources (for example: open flames, an operating gas appliance, or an operating electric heater).*

*This statement applies to models utilizing R-290 refrigerant.

! DANGER continued

- Do not place any potential ignition sources in or near the appliance.
- Keep clear of obstruction all ventilation openings in the appliance enclosure or in the structure for building-in.
- No potential sources of ignition are to be used in the searching for or detection of refrigerant leaks.
- Do not use electrical appliances inside the appliance unless they are of the type recommended by the manufacturer.
- Do not store explosive substances such as aerosol cans with a flammable propellant in this appliance.
- Check that cabling will not be subject to wear, corrosion, excessive pressure, vibration, sharp edges, or any other adverse environmental effects. The check shall also take into account the effects of aging or continual vibration from sources such as compressors or fans.
- Ensure that the area is in the open or that it is adequately ventilated before breaking into the system or conducting any hot work. A degree of ventilation shall continue during the period that the work is carried out. The ventilation should safely disperse any released refrigerant and preferably expel it externally into the atmosphere.
- Models utilizing R-290 refrigerant shall be used on a dispenser unit/ice storage bin without electrical components or one designed to be used with flammable refrigerants, and of a size or type as indidcated in this manual.

Risque D'Incendie ou D'Explosion Fluide Frigorigène Inflammable Utilisé*

- Les techniciens de service qualifiés sont ceux qui possèdent la formation technique et l'expérience nécessaires pour être conscients des dangers auxquels ils sont exposés dans l'accomplissement d'une tâche et des mesures nécessaires pour réduire au minimum le danger pour eux-mêmes ou pour d'autres personnes.
- Aucune opération d'entretien ne doit être entreprise avant que le technicien n'ait lu attentivement ce manuel. Toutes les précautions de sécurité doivent être suivies.
- Cet appareil doit être installé conformément à la norme de sécurité pour les systèmes de réfrigération ANSI/ASHRAE 15.
- Suivez attentivement les instructions de manutention conformément aux réglements nationaux.
- Ne pas utiliser de dispositifs mécaniques ou d'autres moyens pour accélérer le processus de dégivrage ou pour nettoyer, autres que ceux recommandés par le fabricant.
- Ne pas perforer la conduite de fluide frigorigène. Risque d'incendie ou d'explosion en cas de perforation d'une canalisation de fluide frigorigène; suivez attentivement les instructions de manutention.*
- L'entretien doit être effectué par du personnel formé et certifié pour la manipulation de réfrigérants inflammables afin de réduire au minimum le risque d'inflammation dû à des pièces incorrectes ou à un entretien inadéquat.*
- Les pièces doivent être remplacées par des pièces similaires, de manière à réduire au minimum le risque d'inflammation dû à des pièces incorrectes.*

* Cette déclaration s'applique aux modèles utilisant le réfrigérant R-290.

! DANGER continué

- Mettre au rebut conformément aux réglements fédéraux ou locaux.
- Ne pas percer ou brûler.
- Attention, les fluides frigorigénes peuvent ne pas dégager d'odeur.
- Ne pas endommager les composants du circuit de réfrigération.
- Voir plaque signalétique pour la charge de réfrigérant R-290:*
  - Si elle est supérieure à 114 g (4 oz.), ne pas l'installer dans un couloir public ou un hall d'entrée.
  - Si elle est supérieure à 152 g (5,3 oz.), ne pas l'installer à moins de 6 m (20 pi) d'une flamme nue.
- L'appareil doit être entreposé dans un local ne contenant pas de sources d'inflammation permanentes (flammes nues, appareil à gaz ou dispositif de chauffage électrique en fonctionnement, par exemple).*
- Ne placer aucune source d'inflammation potentielle à l'intérieur ou à proximité de l'appareil.
- Ne pas obstruer les ouvertures de ventilation dans l'enceinte de l'appareil ou dans la structure d'encastrement.
- Aucune source potentielle d'inflammation ne doit être utilisée pour rechercher ou détecter des fuites de réfrigérant.
- Ne pas utiliser d'appareils électriques à l'intérieur de l'appareil, sauf s'ils sont du type recommandé par le fabricant.
- Ne pas entreposer dans cet appareil des substances explosives telles que des bombes aérosols contenant un gaz propulseur inflammable.
- Vérifier que le câblage ne sera pas soumis à l'usure, à la corrosion, à une pression excessive, à des vibrations, à des arêtes vives ou à tout autre effet environnemental négatif. Le contrôle doit également prendre en compte les effets du vieillissement ou des vibrations continues provenant de sources telles que les compresseurs ou les ventilateurs.
- S'assurer que la zone est à l'air libre ou qu'elle est correctement ventilée avant de pénétrer dans le système ou d'effectuer un travail à chaud. Une certaine ventilation doit être maintenue pendant la durée des travaux. La ventilation doit permettre de disperser en toute sécurité tout réfrigérant libéré et, de préférence, de l'expulser dans l'atmosphère.
- Les modèles utilisant le réfrigérant R-290 doivent être utilisés sur un bac de stockage/distributeur de glace sans composants électriques ou sur un modèle conçu pour être utilisé avec des réfrigérants inflammables, et d'une taille ou d'un type tel qu'indiqué dans ce manuel.

* Cette déclaration s’applique aux modèles utilisant le réfrigérant R-290.

⚠ WARNING

The appliance should be destined only to the use for which it has been expressly conceived. Any other use should be considered improper and therefore dangerous. The manufacturer cannot be held responsible for injury or damage resulting from improper, incorrect, and unreasonable use. Failure to service and maintain the appliance in accordance with this manual will adversely affect safety, performance, component life, and warranty coverage and may result in costly water damage.

To reduce the risk of death, electric shock, serious injury, or fire, follow basic precautions including the following:

- This appliance is not intended for use above 2,000 m (6,561 ft). Installation above 2,000 m (6,561 ft) may adversely affect safety, performance, and component life.
- Wear appropriate personal protective equipment (PPE) when servicing the appliance.
- Moving parts (e.g., fan blade) can crush and cut. Keep hands clear.
- The appliance must be installed in accordance with applicable national, state, and local codes and regulations. Failure to meet these code requirements could result in death, electric shock, serious injury, fire, or damage.
- Do not make any alterations to the appliance. Alterations could result in electric shock, injury, fire, or damage to the appliance.
- Appliance is heavy. Use care when lifting or positioning. Work in pairs when needed to prevent injury or damage.
- The appliance requires an independent power supply of proper capacity. See the nameplate for electrical specifications. Failure to use an independent power supply of proper capacity can result in a tripped breaker, blown fuse, damage to existing wiring, or component failure. This could lead to heat generation or fire.
- **THE APPLIANCE MUST BE GROUNDED.** Failure to follow these instructions may result in death, electric shock, or fire.
- Risk of electric shock. Use extreme caution and exercise safe electrical practices.
- Risk of electric shock. Control switch in "OFF" position does not de-energize all loads.
- To reduce the risk of electric shock, do not touch the control switch or plug with damp hands.
- To reduce the risk of electric shock, make sure the control switch is in the "OFF" position before plugging in or unplugging the appliance.
- The appliance is not intended for use by persons (including children) with reduced physical, sensory, or mental capabilities, or lack of experience and knowledge, unless they have been given supervision or instruction concerning use of the appliance by a person responsible for their safety.
- Do not splash, pour, or spray water directly onto or into the appliance. This might cause short circuit, electric shock, corrosion, or failure.
- Children should be supervised to ensure that they do not play with the appliance.
- Do not climb, stand, or hang on the appliance or allow children or animals to do so. Death or serious injury could occur or the appliance could be damaged.

⚠ WARNING continued

- Do not climb, stand, or hang on the appliance or allow children or animals to do so. Death or serious injury could occur or the appliance could be damaged.
- Do not use combustible spray or place volatile or flammable substances in or near the appliance. They might catch fire.
- Keep the area around the appliance clean. Dirt, dust, or insects in the appliance could cause harm to individuals or damage to the appliance.

NOTICE

- Follow the water supply, drain connection, and maintenance instructions in the instruction manual carefully to reduce the risk of costly water damage.
- In areas where water damage is a concern, install in a contained area with a floor drain.
- Install the appliance in a location that stays above freezing. Normal operating ambient temperature must be within 45°F to 100°F (7°C to 38°C).
- To help ensure that the ice storage bin drain remains clear, follow the Ice Storage Bin Drain instructions in the instruction manual once every 3 months or as often as necessary for conditions. If the ice storage bin drain becomes clogged, water could build up in the bin and overflow, leading to costly water damage.
- Do not leave the appliance on during extended periods of non-use, extended absences, or in sub-freezing temperatures. To properly prepare the appliance for these occasions, follow the instructions in "V. Preparing the Appliance for Periods of Non-Use."
- If water collects in the bin and will not drain, turn off the appliance and close the water supply line shut-off valve.

NOTICE Continued

- If water seeps from the base of the appliance, turn off the appliance and close the water supply line shut-off valve. Failure to do so could lead to costly water damage.
- Do not place objects on top of the appliance.
- The dispenser unit/ice storage bin is for ice use only. Do not store anything else in the dispenser unit/ice storage bin.
- Protect the floor when moving the appliance to prevent damage to the floor.

I. Construction and Water/Refrigeration Circuit Diagram

A. Construction

1. Icemaker

a) Air-Cooled Models

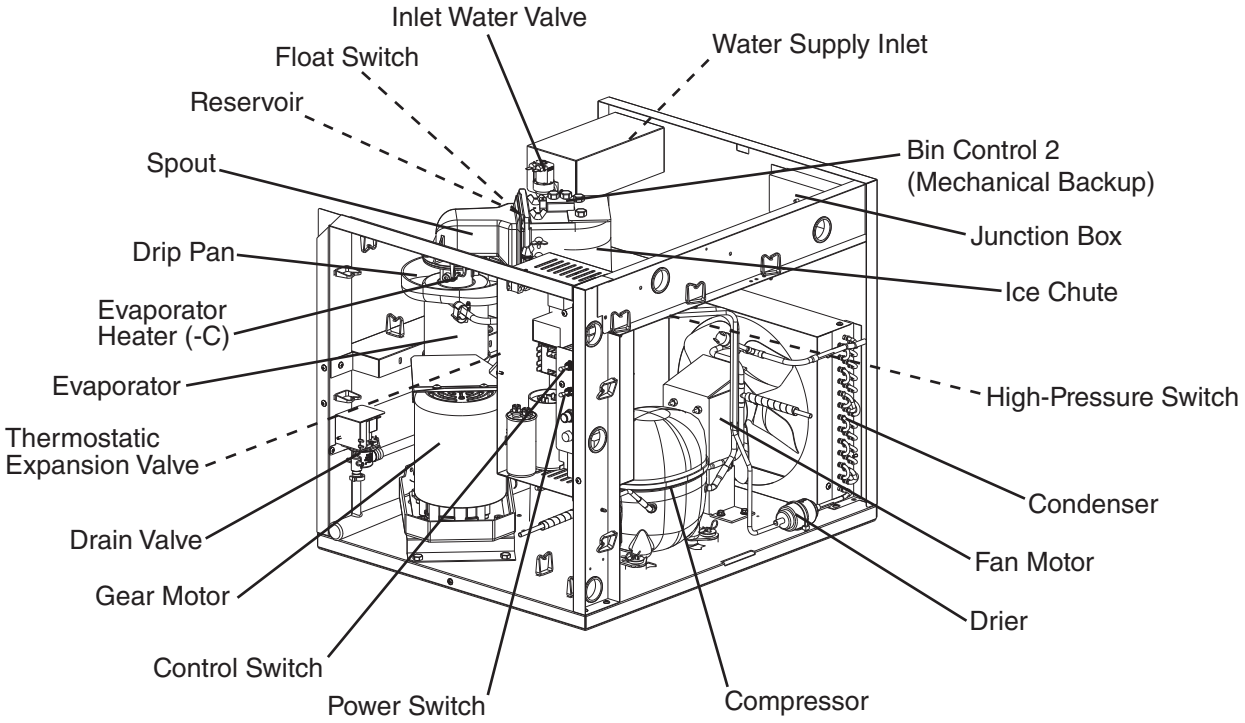

Model Shown: F-422MAK-C

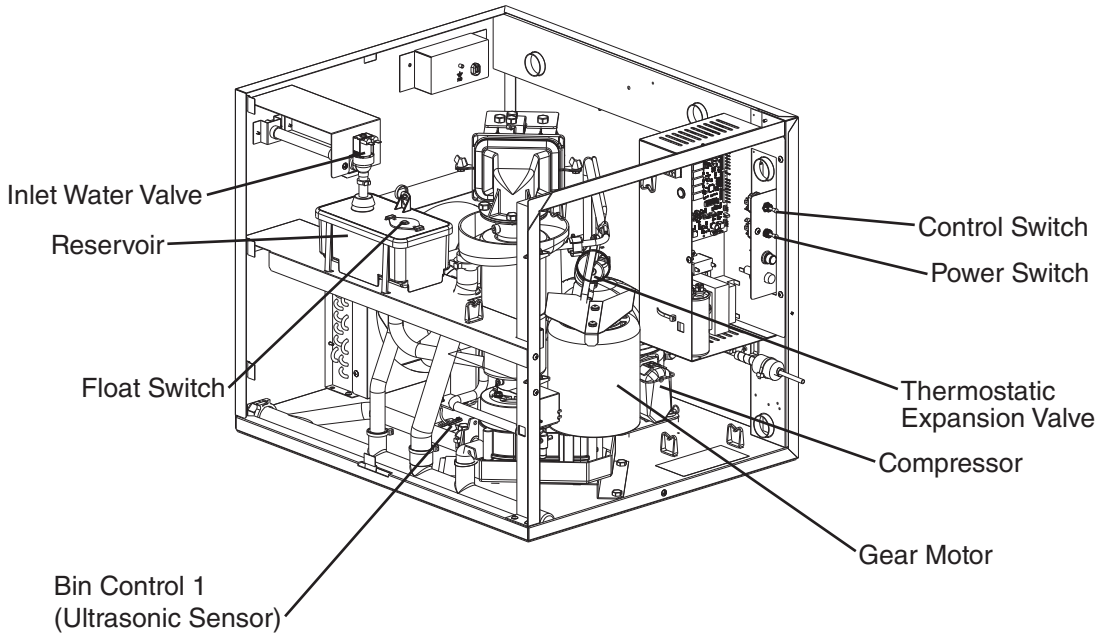

Model Shown: F-422MAK-C

b) Water-Cooled Models

DATA PENDING

c) Remote-Cooled Models

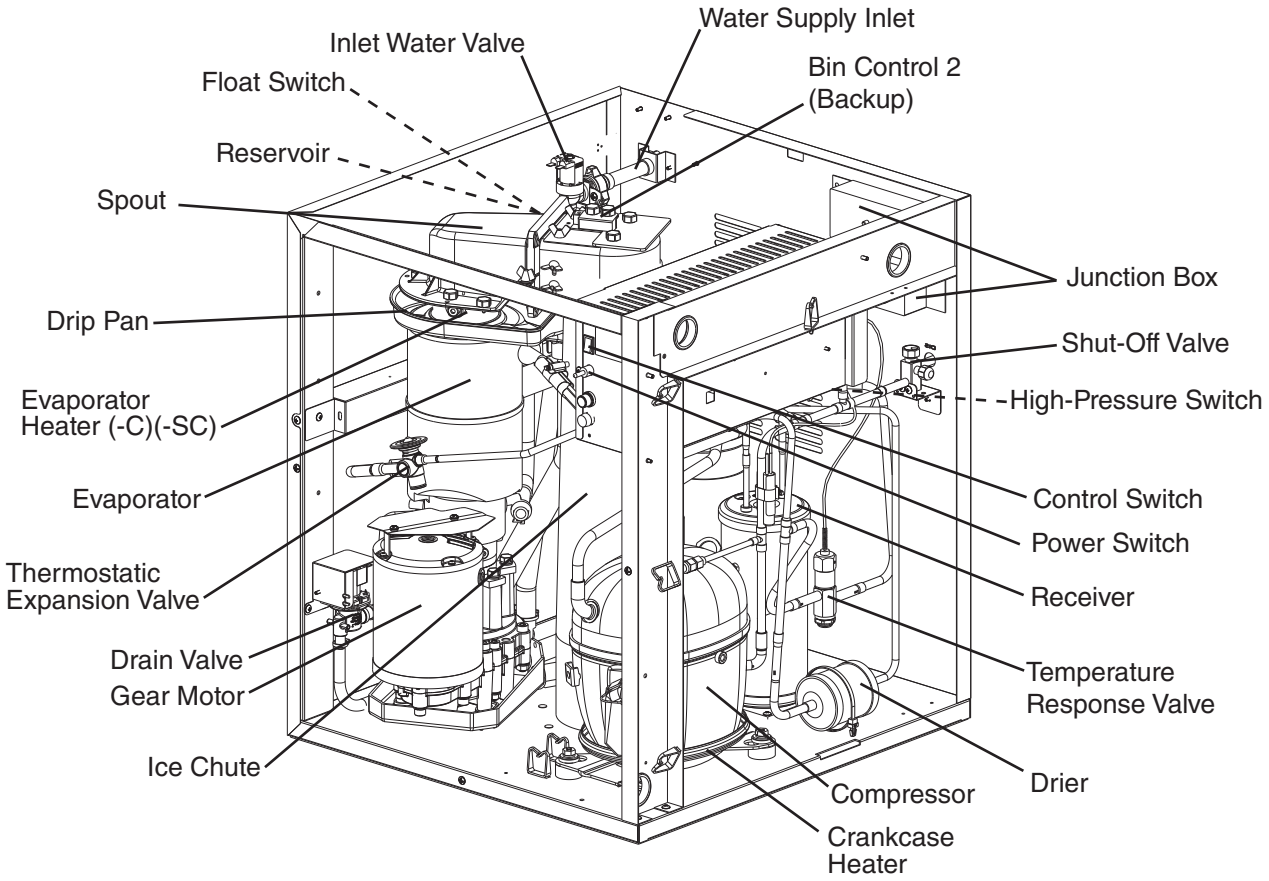

Model Shown: F-1022MRKZ-C

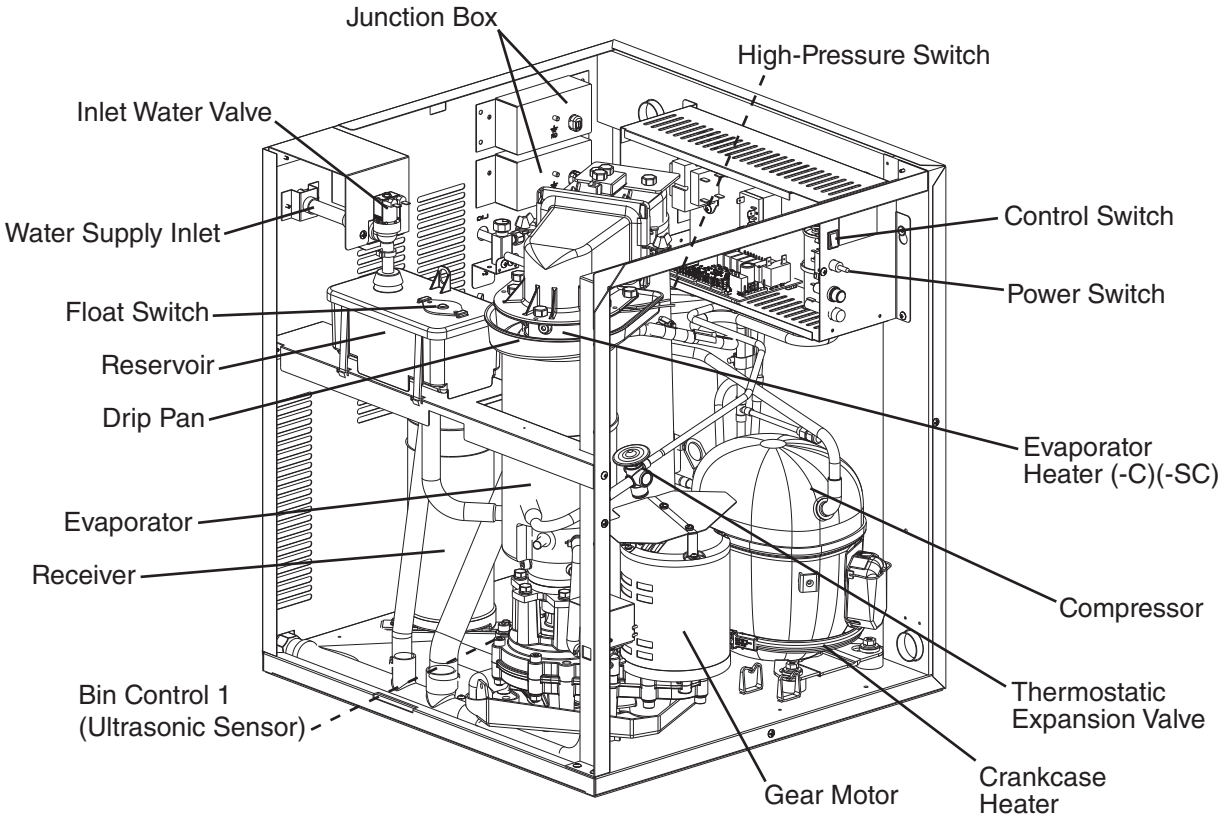

Model Shown: F-1022MRKZ-C

d) Low-Side, Parallel Rack System Models

DATA PENDING

2. Ice Making Assembly

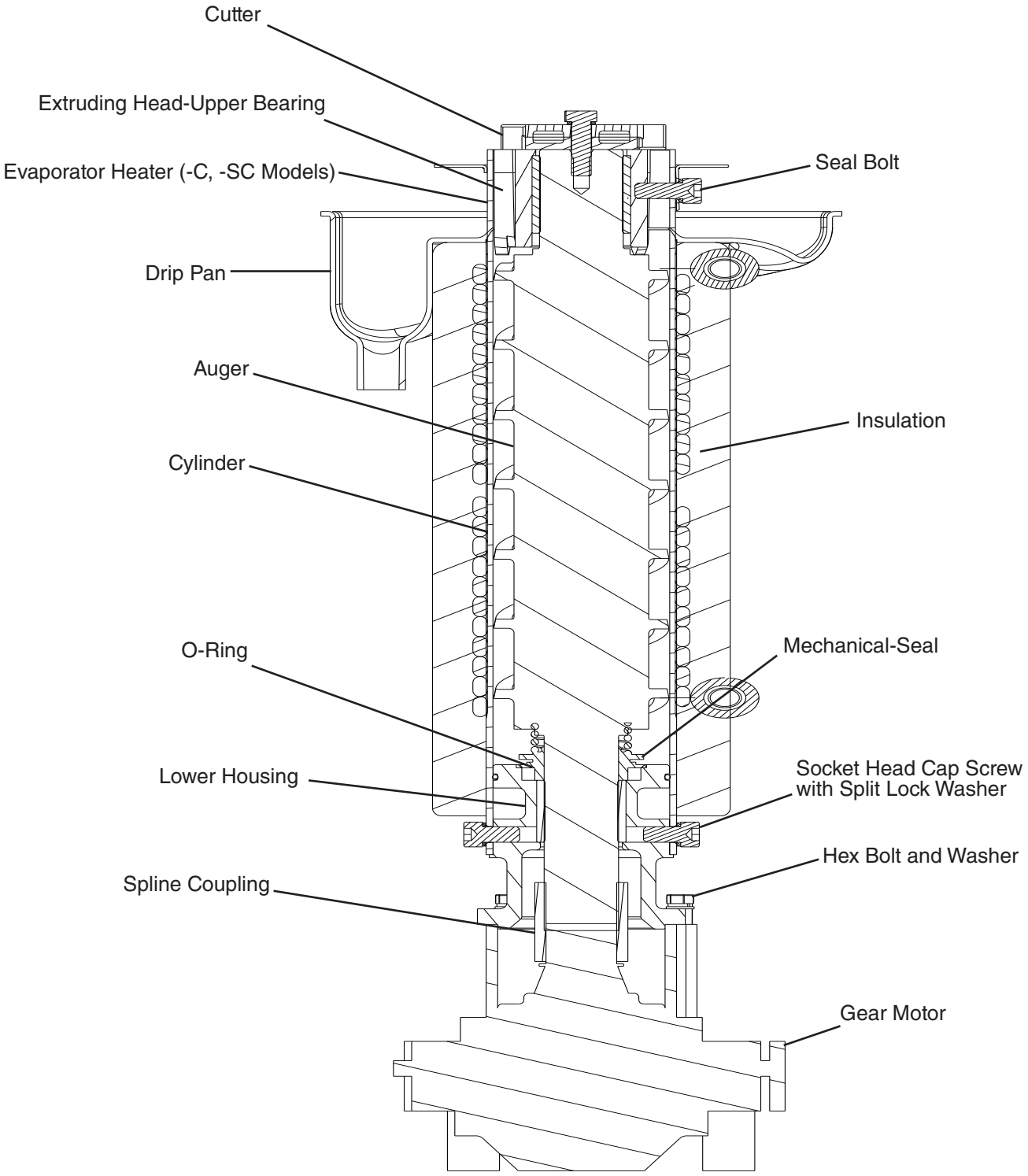

3. Water/Refrigeration Circuit Diagram

a) Air-Cooled Models

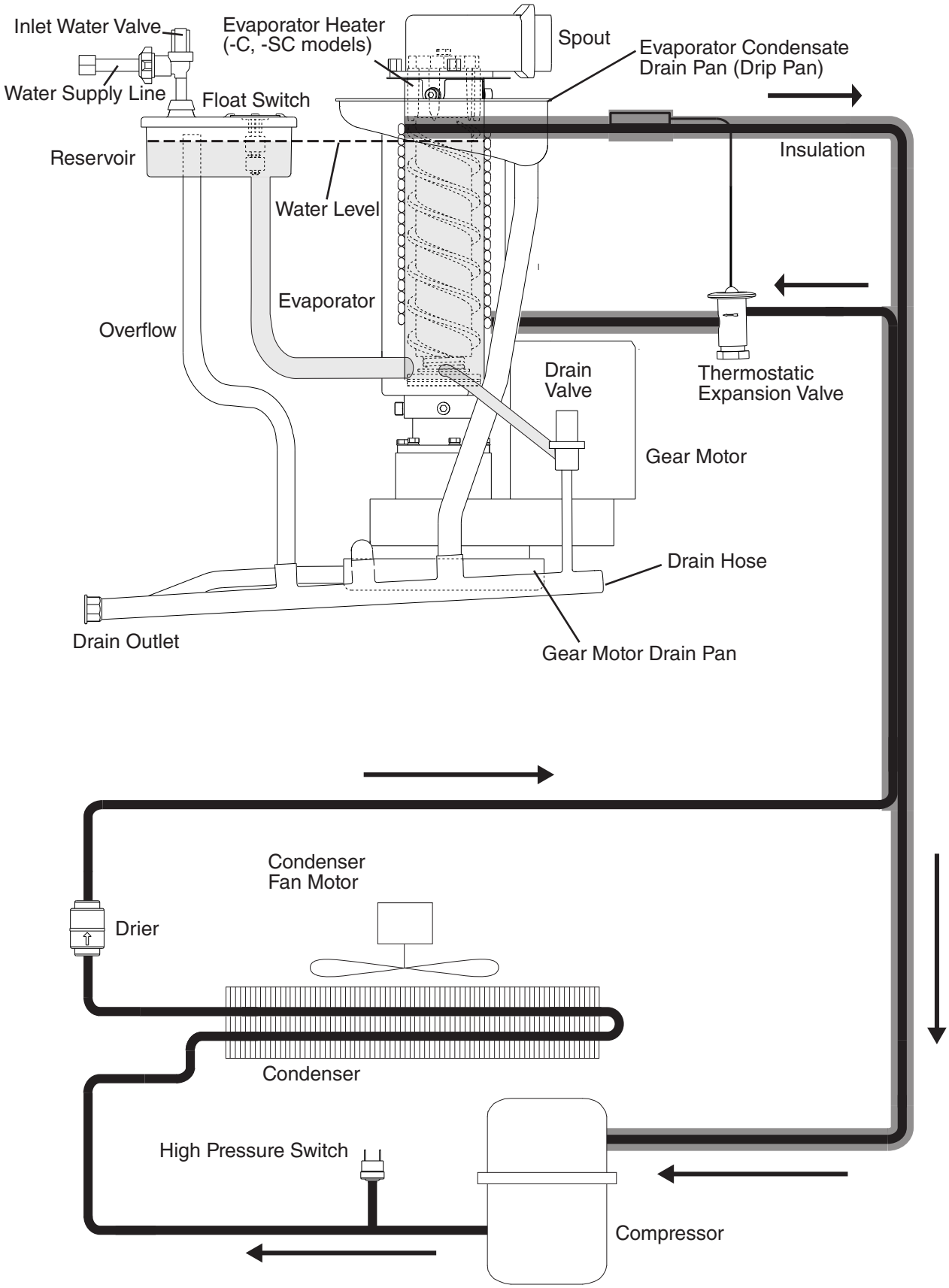

b) Water-Cooled Models

DATA PENDING

c) Remote Air-Cooled Models

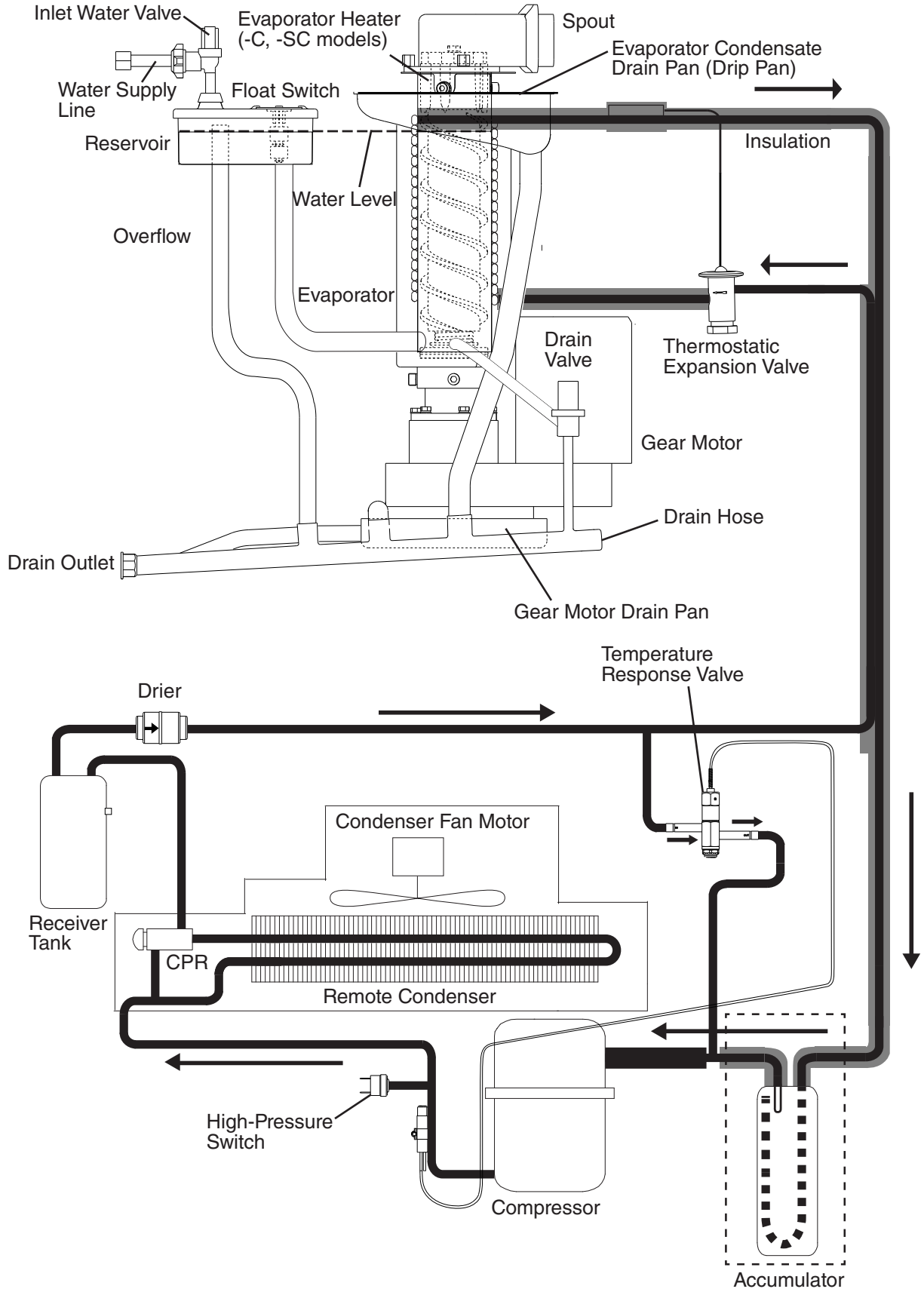

d) Low-Side, Parallel Rack System Models

DATA PENDING

II. Sequence of Operation and Service Diagnosis

A. Sequence of Operation Flow Chart

1. Icemaker Flow Chart

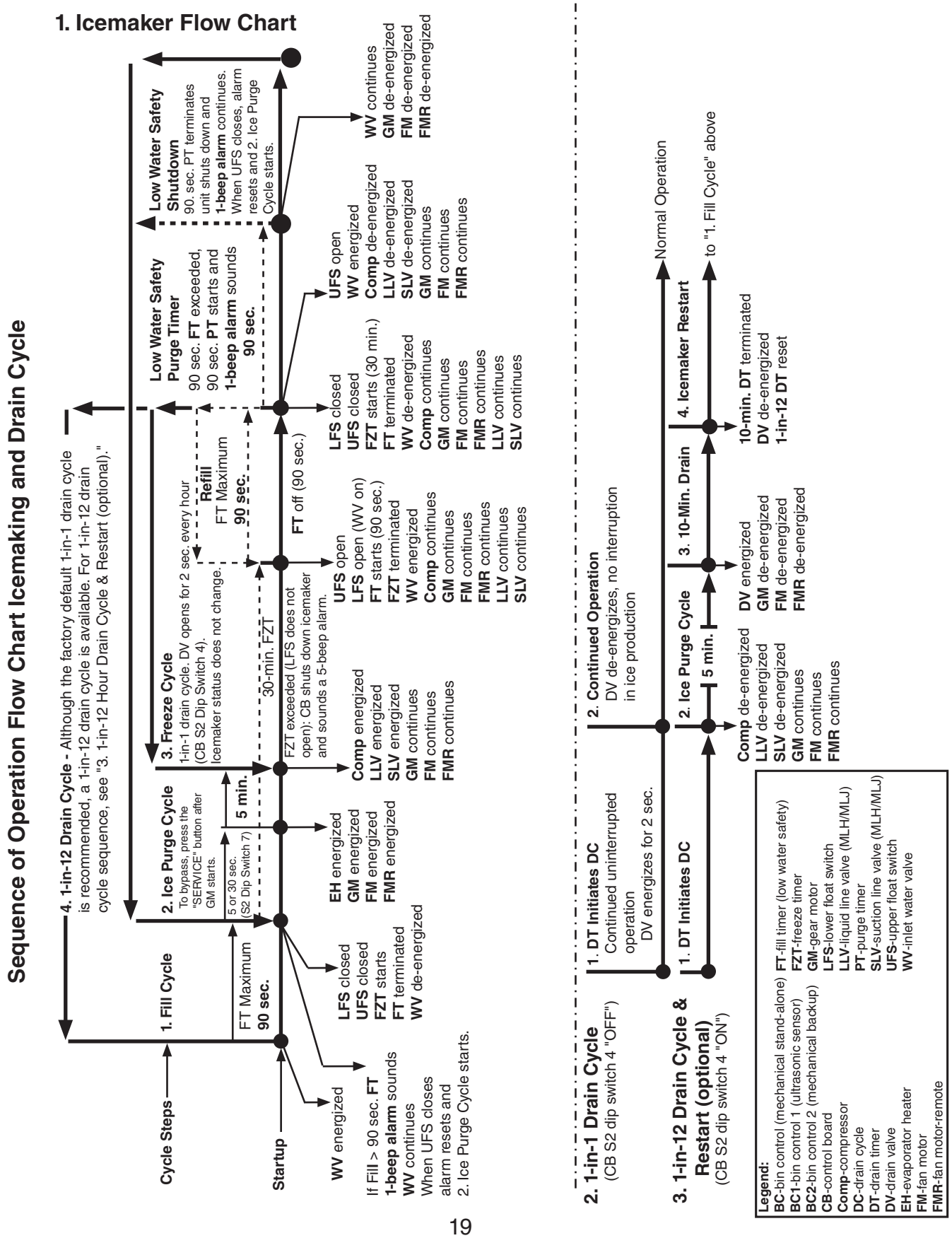

2. Bin Control Shutdown Flow Chart

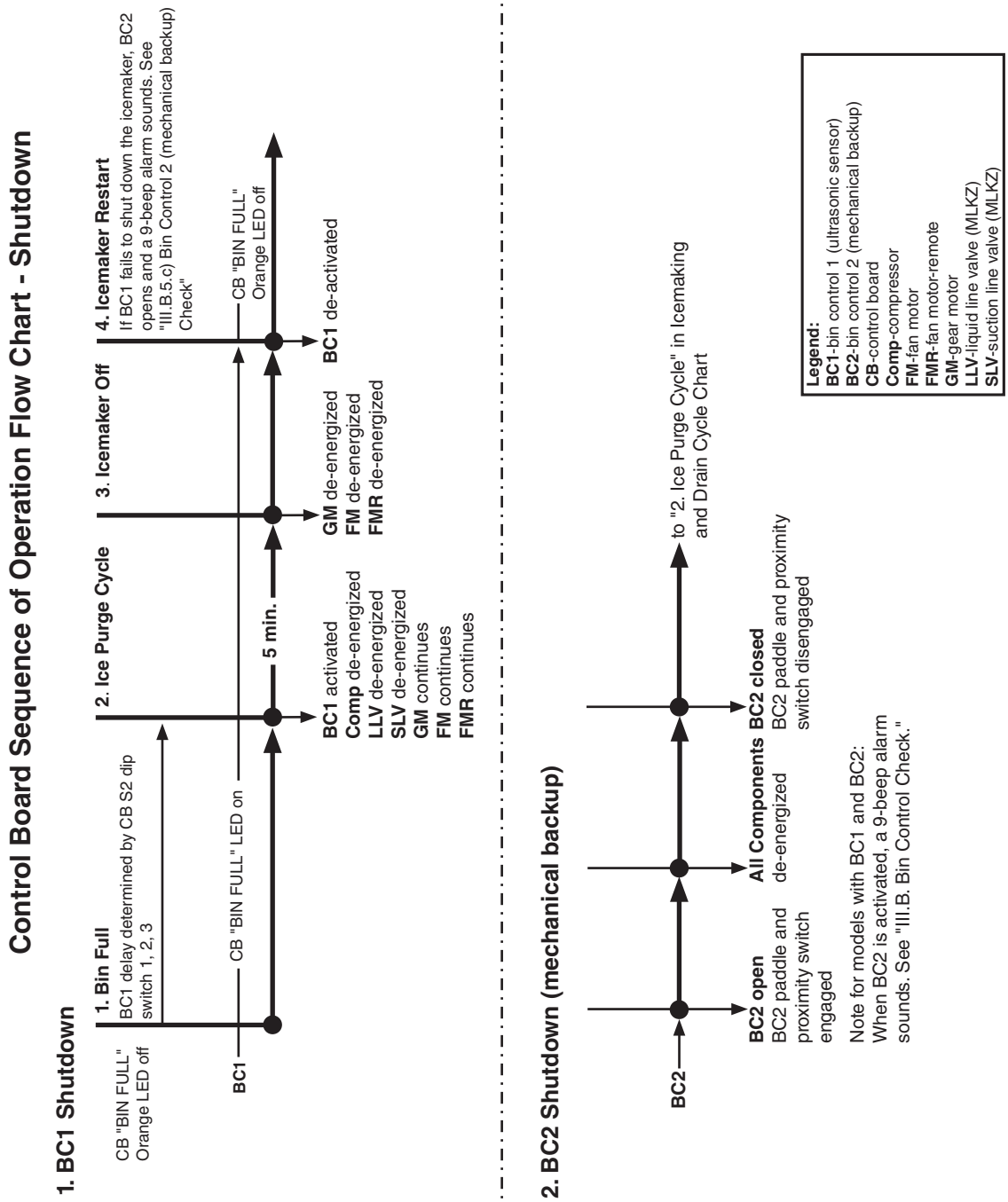

III. Service Diagnosis, Refrigeration Circuit Service, and Component Service

A. Safety Precautions When Servicing | Précautions de sécurité lors de l'entretien

1. English

R-290 Class A3 Flammable Refrigerant Used*

! DANGER

Risk of Fire or Explosion. Flammable Refrigerant Used.*

- Be sure to follow all Important Safety Information located at the beginning of this manual and in this section.
- The appliance should be diagnosed and repaired only by qualified service personnel to reduce the risk of death, electric shock, serious injury, or fire.
- Servicing shall be done by trained service personnel with certified competence in handling flammable refrigerants to minimize the risk of possible ignition due to incorrect parts or improper service.*
- Follow handling instructions carefully in compliance with national regulations.
- Do not use mechanical devices or other means to accelerate the defrosting process or to clean, other than those recommended by the manufacturer.
- Be aware that refrigerants may not contain an odor.
- Do not puncture refrigerant tubing. Risk of fire or explosion due to puncture of refrigerant tubing; follow handling instructions carefully.*
- Component parts shall be replaced with like components. So as to minimize the risk of possible ignition due to incorrect parts.*
- Do not place any potential ignition sources in or near the appliance.*
- Prior to beginning work on systems containing flammable refrigerants, safety checks are necessary to ensure that the risk of ignition is minimized.*
- All maintenance staff and others working in the local area shall be instructed on the nature of work being carried out. Work in confined spaces shall be avoided.*
- Work shall be undertaken under a controlled procedure so as to minimize the risk of a flammable gas or vapor being present while the work is being performed.*
- The area shall be checked with an appropriate refrigerant detector prior to and during work, to ensure the technician is aware of potentially toxic or flammable atmospheres.*
- Ensure that the leak detection equipment being used is suitable for use with all applicable refrigerants, i.e., nonsparking, adequately sealed, or intrinsically safe. NOTE: The use of silicone sealant can inhibit the effectiveness of some types of leak detection equipment.*

*This statement applies to models utilizing R-290 refrigerant.

! DANGER continued

- Under no circumstances shall potential sources of ignition be used in the searching for or detection of refrigerant leaks. A halide torch (or any other detector using a naked flame) shall not be used.*
- The following leak detection methods are deemed acceptable for all refrigerant systems:
  - Electronic leak detectors may be used to detect refrigerant leaks but, in the case of flammable refrigerants, the sensitivity might not be adequate, or might need recalibration. (Detection equipment shall be calibrated in a refrigerant-free area.) Ensure that the detector is not a potential source of ignition and is suitable for the refrigerant used. Leak detection equipment shall be set at a percentage of the LFL of the refrigerant and shall be calibrated to the refrigerant employed, and the appropriate percentage of gas (25% maximum) is confirmed.
  - Leak detection fluids are also suitable for use with most refrigerants but the use of detergents containing chlorine shall be avoided as the chlorine can react with the refrigerant and corrode the copper pipe-work.

    Note: Examples of leak detection fluids are:
    - bubble method
    - fluorescent method agents
- If any hot work is to be conducted on the refrigerating equipment or any associated parts, appropriate fire extinguishing equipment shall be available on hand. A dry chemical or CO_2 fire extinguisher should be adjacent to the charging area. You must have a Class B chemical fire extinguisher available at all times.*
- No person carrying out work in relation to a refrigerating system which involves exposing any pipe work shall use any sources of ignition in such a manner that it may lead to the risk of fire or explosion. All possible ignition sources, including cigarette smoking, should be kept sufficiently far away from the site of installation, repairing, removing, and disposal, during which refrigerant can possibly be released to the surrounding space. Prior to work taking place, the area around the equipment shall be surveyed to make sure that there are no flammable hazards or ignition risks. “No Smoking” signs shall be displayed.*
- Ensure that the area is in the open or that it is adequately ventilated before breaking into the system or conducting any hot work. A degree of ventilation shall continue during the period that the work is carried out. The ventilation should safely disperse any released refrigerant and preferably expel it externally into the atmosphere.*
- When breaking into the refrigerant circuit to make repairs – or for any other purpose – conventional procedures shall be used. However, for flammable refrigerants it is important that best practice be followed, since flammability is a consideration. The following procedure shall be adhered to:*
  - safely remove refrigerant following local and national regulations
  - purge the circuit with inert gas
  - evacuate (optional for A2L)
  - purge with inert gas (optional for A2L)
  - open the circuit by cutting or brazing

*This statement applies to models utilizing R-290 refrigerant.

! DANGER continued

- If a leak is suspected, all naked flames shall be removed/extinguished.*
- If a leakage of refrigerant is found which requires brazing, all of the refrigerant shall be recovered from the system, or isolated (by means of shut off valves) in a part of the system remote from the leak.
- When removing refrigerant from a system, either for servicing or decommissioning, it is recommended good practice that all refrigerants are removed safely.
- When transferring refrigerant into cylinders, ensure that only appropriate refrigerant recovery cylinders are employed. Ensure that the correct number of cylinders for holding the total system charge is available. All cylinders to be used are designated for the recovered refrigerant and labeled for that refrigerant (i.e., special cylinders for the recovery of refrigerant). Cylinders shall be complete with pressure-relief valve and associated shut-off valves in good working order. Empty recovery cylinders are evacuated and, if possible, cooled before recovery occurs.
- The recovery equipment shall be in good working order with a set of instructions concerning the equipment that is at hand and shall be suitable for the recovery of all appropriate refrigerants including, when applicable, flammable refrigerants. In addition, a set of calibrated weighing scales shall be available and in good working order. Hoses shall be complete with leak-free disconnect couplings and in good condition. Before using the recovery machine, check that it is in satisfactory working order, has been properly maintained and that any associated electrical components are sealed to prevent ignition in the event of a refrigerant release. Consult manufacturer if in doubt.
- The recovered refrigerant shall be returned to the refrigerant supplier in the correct recovery cylinder, and the relevant waste transfer note arranged. Do not mix refrigerants in recovery units and especially not in cylinders.
- If compressors or compressor oils are to be removed, ensure that they have been evacuated to an acceptable level to make certain that flammable refrigerant does not remain within the lubricant. The evacuation process shall be carried out prior to returning the compressor to the suppliers. Only electric heating to the compressor body shall be employed to accelerate this process. When oil is drained from a system, it shall be carried out safely.
- In addition to conventional charging procedures, the following requirements shall be followed:
  - Ensure that contamination of different refrigerants does not occur when using charging equipment. Hoses or lines shall be as short as possible to minimize the amount of refrigerant contained in them.
  - Cylinders shall be kept in an appropriate position according to the instructions.
  - Ensure that the refrigerating system is earthed (grounded) prior to charging the system with refrigerant.
  - Label the system when charging is complete (if not already).
  - Extreme care shall be taken not to overfill the refrigerating system.
- Prior to recharging the system, it shall be pressure-tested with the appropriate purging gas. The system shall be leak-tested on completion of charging but prior to commissioning. A follow up leak test shall be carried out prior to leaving the site.

*This statement applies to models utilizing R-290 refrigerant.

! DANGER continued

- Repair and maintenance to electrical components shall include initial safety checks and component inspection procedures. If a fault exists that could compromise safety, then no electrical supply shall be connected to the circuit until it is satisfactorily dealt with. If the fault cannot be corrected immediately but it is necessary to continue operation, an adequate temporary solution shall be used. This shall be reported to the owner of the equipment, so all parties are advised.
- Confirm that capacitors are discharged: this shall be done in a safe manner to avoid possibility of sparking.
- Confirm that no live electrical components and wiring are exposed while charging, recovering, or purging the system.
- Confirm that there is continuity of earth bonding (grounding).
- During repairs to sealed components, all electrical supplies shall be disconnected from the equipment being worked upon prior to any removal of sealed covers, etc. If it is absolutely necessary to have an electrical supply to equipment during servicing, then a permanently operating form of leak detection shall be located at the most critical point to warn of a potentially hazardous situation.
- Where electrical components are being changed, they shall be fit for the purpose and to the correct specification. At all times, Hoshizaki America's maintenance and service guidelines shall be followed. If in doubt, consult Hoshizaki America's Technical Support department for assistance.
- Confirm the actual refrigerant charge is in accordance with the room size within which the refrigerant containing parts are installed.*
- Confirm the ventilation machinery and outlets are operating adequately and are not obstructed.
- Confirm marking to the equipment continues to be visible and legible. Markings and signs that are illegible shall be corrected.
- Confirm refrigerating pipe or components are installed in a position where they are unlikely to be exposed to any substance which may corrode refrigerant containing components, unless the components are constructed of materials which are inherently resistant to being corroded or are suitably protected against being so corroded.
- Particular attention shall be paid to the following to ensure that by working on electrical components, the casing is not altered in such a way that the level of protection is affected. This shall include damage to cables, excessive number of connections, terminals not made to original specification, damage to seals, incorrect fitting of glands, etc.
- Ensure that the apparatus (control box/component) is mounted securely.
- Ensure that seals or sealing materials have not degraded to the point that they no longer serve the purpose of preventing the ingress of flammable atmospheres. Replacement parts shall be in accordance with Hoshizaki America’s specifications.*
- Do not apply any permanent inductive or capacitance loads to the circuit without ensuring that this will not exceed the permissible voltage and current permitted for the equipment in use.

*This statement applies to models utilizing R-290 refrigerant.

! DANGER continued

- Intrinsically safe components are the only types that can be worked on while live in the presence of a flammable atmosphere. The test apparatus shall be at the correct rating.*
- Replace components only with parts specified by Hoshizaki America. Other parts can result in the ignition of refrigerant in the atmosphere from a leak.*
- Check that cabling will not be subject to wear, corrosion, excessive pressure, vibration, sharp edges, or any other adverse environmental effects. The check shall also take into account the effects of aging or continual vibration from sources such as compressors or fans.

*This statement applies to models utilizing R-290 refrigerant.

R-290 Classe A3 Réfrigérant Inflammable Utilisé*

! DANGER

Risque De Feu Ou D'Explosion. Fluide Frigorigène Inflammable Utilisé.*

- Assurez-vous de suivre toutes les informations importantes de sécurité situées au début de ce manuel et dans cette section.
- L'appareil ne doit être diagnostiqué et réparé que par un personnel qualifié afin de prévenir les risques de mort, d'électrocution, de blessures graves ou d'incendie.
- L'entretien doit être effectué par du personnel formé et certifié pour la manipulation de réfrigérants inflammables afin de réduire au minimum le risque d'inflammation dû à des pièces incorrectes ou à un entretien inadéquat.*
- Suivez attentivement les instructions de manutention conformément aux réglements nationaux.
- Ne pas utiliser de dispositifs mécaniques ou d'autres moyens pour accélérer le processus de dégivrage ou pour nettoyer, autres que ceux recommandés par le fabricant.
- Attention, les fluides frigorigénes peuvent ne pas dégager d'odeur.
- Ne pas perforer la tubulure contenant le frigorigène. Risque de feu ou d'explosion si la tubulure contenant le frigorigène est perforée; suivre les instructions de manutention avec soin.*
- Les pièces doivent être remplacées par des pièces similaires, de manière à réduire au minimum le risque d'inflammation dû à des pièces incorrectes.*
- Ne placez aucune source d'inflammation potentielle dans ou près de l'appareil.*
- Avant de commencer à travailler sur des systèmes contenant des réfrigérants inflammables, des contrôles de sécurité sont nécessaires pour s'assurer que le risque d'inflammation est minimisé.*
- Tout le personnel d'entretien et les autres personnes travaillant dans la zone locale doivent être informés de la nature des travaux effectués. Les travaux dans des espaces confinés doivent être évités.*
- Les travaux doivent être entrepris selon une procédure contrôlée afin de minimiser le risque de présence de gaz ou de vapeur inflammable pendant l'exécution des travaux.*
- La zone doit être contrôlée à l'aide d'un détecteur de réfrigérant approprié avant et pendant les travaux, afin de s'assurer que le technicien est conscient de l'existence d'atmosphères potentiellement toxiques ou inflammables.*
- Assurez-vous que l'équipement de détection des fuites utilisé est adapté à l'utilisation de tous les réfrigérants applicables, c'est-à-dire qu'il ne produit pas d'étincelles, qu'il est correctement scellé ou qu'il est intrinsèquement sûr. REMARQUE: L'utilisation de mastic silicone peut réduire l'efficacité de certains types d'équipements de détection des fuites.*

* Cette déclaration s'applique aux modèles utilisant le réfrigérant R-290.

! DANGER Continué

- En aucun cas, des sources potentielles d'inflammation ne doivent être utilisées pour rechercher ou détecter des fuites de réfrigérant. Une lampe haloïde (ou tout autre détecteur utilisant une flamme nue) ne doit pas être utilisée.*
- Les méthodes de détection de fuite suivantes sont considérées comme acceptables pour tous les systèmes de réfrigération:*
  - Des détecteurs de fuites électroniques peuvent être utilisés pour détecter les fuites de réfrigérants, mais, dans le cas de réfrigérants inflammables, la sensibilité pourrait ne pas être adéquate ou nécessiter un réétalonnage. (L'équipement de détection doit être étalonné dans une zone sans réfrigérant.) Assurez-vous que le détecteur n'est pas une source potentielle d'inflammation et qu'il est adapté au réfrigérant utilisé. L'équipement de détection des fuites doit être réglé sur un pourcentage de la LII du réfrigérant et doit être étalonné en fonction du réfrigérant utilisé, et le pourcentage approprié de gaz (25% au maximum) est confirmé.
  - Les liquides de détection des fuites conviennent également à la plupart des réfrigérants, mais l'utilisation de détergents contenant du chlore doit être évitée, car le chlore peut réagir avec le réfrigérant et corroder la tuyauterie en cuivre.

    Remarque : Voici quelques exemples de liquides de détection de fuites :
    - méthode des bulles
    - agents de méthode fluorescents
- Si un travail à chaud doit être effectué sur l'équipement réfrigérant ou toute partie associée, un équipement d'extinction d'incendie approprié doit être disponible. Un extincteur à poudre chimique ou à CO_2 devrait être installé à proximité de la zone de chargement. Un extincteur chimique de classe B doit être disponible à tout moment.*
- Il est interdit à toute personne effectuant des travaux en rapport avec un système réfrigérant qui impliquent la mise à nu d'une tuyauterie d'utiliser des sources d'inflammation de manière à entraîner un risque d'incendie ou d'explosion. Toutes les sources d'inflammation possibles, y compris la cigarette, doivent être suffisamment éloignées du site d'installation, de réparation, d'enlèvement et d'élimination, au cours desquels du réfrigérant peut éventuellement être libéré dans l'espace environnant. Avant d'entamer les travaux, la zone autour de l'équipement doit être étudiée pour s'assurer qu'il n'y a aucun risque d'inflammabilité ou d'inflammation. Des panneaux « Interdiction de fumer » doivent être affichés.*
- Assurez-vous que la zone est à l'air libre ou qu'elle est correctement ventilée avant de pénétrer dans le système ou d'effectuer un travail à chaud. Un certain degré de ventilation doit être maintenu pendant la période où les travaux sont effectués. La ventilation doit permettre de disperser en toute sécurité tout réfrigérant libéré et, de préférence, de l'expulser dans l'atmosphère.*

* Cette déclaration s’applique aux modèles utilisant le réfrigérant R-290.

! DANGER Continué

- Pour pénétrer dans le circuit du réfrigérant afin d'effectuer des réparations ou pour toute autre raison, des procédures conventionnelles doivent être utilisées. Toutefois, pour les réfrigérants inflammables, il est important de suivre les meilleures pratiques, car l'inflammabilité est un facteur à prendre en considération. La procédure suivante doit être respectée:*
  - éliminer le réfrigérant en toute sécurité conformément aux réglementations locales et nationales
  - purger le circuit avec du gaz inerte
  - évacuer (en option pour A2L)
  - purger avec du gaz inerte (en option pour A2L)
  - ouvrir le circuit par coupure ou brasage
- Si une fuite est suspectée, toutes les flammes nues doivent être enlevées/éteintes.
- Si une fuite de réfrigérant nécessitant un brasage est constatée, tout le réfrigérant doit être récupéré dans le système ou isolé (au moyen de vannes d'arrêt) dans une partie du système éloignée de la fuite.
- Lors de l'élimination du réfrigérant d'un système, que ce soit pour l'entretien ou la mise hors service, il est recommandé de veiller à ce que tous les réfrigérants soient éliminés en toute sécurité.
- Lors du transfert de réfrigérant dans des bouteilles, veillez à ce que seules des bouteilles de récupération de réfrigérant appropriées soient utilisées. Assurez-vous que le nombre de bouteilles nécessaires pour contenir la charge totale du système est disponible. Toutes les bouteilles à utiliser sont désignées pour le réfrigérant récupéré et étiquetées pour ce réfrigérant (c'est-à-dire des bouteilles spéciales pour la récupération du réfrigérant). Les bouteilles doivent être équipées d'une soupape de surpression et de soupapes d'arrêt associées qui sont en bon état de fonctionnement. Les bouteilles de récupération vides sont évacuées et, si possible, refroidies avant la récupération.
- L'équipement de récupération doit être en bon état de fonctionnement, accompagné d'un ensemble d'instructions concernant l'équipement disponible et doit être adapté à la récupération de tous les réfrigérants appropriés, y compris, le cas échéant, les réfrigérants inflammables. En outre, un ensemble de balances étalonnées doit être disponible et en bon état de fonctionnement. Les tuyaux doivent être complets, équipés de raccords de déconnexion sans fuite et en bon état. Avant d'utiliser la machine de récupération, vérifiez qu'elle est en bon état de fonctionnement, qu'elle a été correctement entretenue et que tous les composants électriques associés sont scellés pour éviter toute inflammation en cas de fuite de réfrigérant. Consulter le fabricant en cas de doute.
- Le réfrigérant récupéré doit être renvoyé au fournisseur de réfrigérant dans la bouteille de récupération appropriée et le bon de transfert de déchets correspondant doit être établi. Ne mélangez pas les réfrigérants dans les unités de récupération et surtout pas dans les bouteilles.

* Cette déclaration s’applique aux modèles utilisant le réfrigérant R-290.

! DANGER Continué

- Si les compresseurs ou les huiles de compresseur doivent être retirés, assurez-vous qu'ils ont été évacués à un niveau acceptable afin de s'assurer qu'il ne reste pas de réfrigérant inflammable dans le lubrifiant. Le processus d'évacuation doit être effectué avant que le compresseur ne soit renvoyé aux fournisseurs. Seul le chauffage électrique du boîtier du compresseur doit être utilisé pour accélérer ce processus. Lorsque l'huile est vidangée d'un système, cette opération doit être effectuée en toute sécurité.
- En plus des procédures de charge conventionnelles, les exigences suivantes doivent être respectées :
  - S'assurer qu'aucune contamination de différents réfrigérants ne se produit lors de l'utilisation de l'équipement de charge. Les tuyaux ou conduites doivent être aussi courts que possible afin de minimiser la quantité de réfrigérant qu'ils contiennent.
  - Les bouteilles doivent être maintenues dans une position appropriée conformément aux instructions.
  - S'assurer que le système de réfrigération soit mis à la terre avant de charger le système avec du réfrigérant.
  - Étiqueter le système lorsque la charge est terminée (si cela n'a pas déjà été fait).
  - Il faut veiller à ne pas trop remplir le système de réfrigération.
- Avant de recharger le système, celui-ci doit être testé sous pression avec le gaz de purge approprié. Le système doit être soumis à un essai de fuite à la fin de la charge, mais avant la mise en service. Un test de contrôle de fuite doit être effectué avant de quitter le site.
- La réparation et l'entretien des composants électriques incluent les contrôles de sécurité initiaux et les procédures d'inspection des composants. En cas de défaut susceptible de compromettre la sécurité, aucune alimentation électrique ne doit être connectée au circuit tant que le problème n'a pas été résolu de manière satisfaisante. Si le défaut ne peut être corrigé immédiatement mais qu'il est nécessaire de poursuivre l'exploitation, une solution temporaire adéquate doit être utilisée. Cela doit être signalé au propriétaire de l'équipement, afin que toutes les parties soient informées.
- S'assurer que les condensateurs sont déchargés : cette opération doit être effectuée en toute sécurité afin d'éviter tout risque d'étincelle.
- S'assurer qu'aucun composant ou câblage électrique sous tension n'est exposé lors de la charge, de la récupération ou de la purge du système.
- S'assurer de la continuité de la mise à la terre.
- Lors des réparations de composants scellés, toutes les alimentations électriques doivent être déconnectées de l'équipement sur lequel on travaille avant tout retrait des couvercles scellés, etc. Si l'alimentation électrique de l'équipement est absolument nécessaire pendant l'entretien, un dispositif de détection des fuites fonctionnant en permanence doit être placé au point le plus critique afin de signaler en cas de situation potentiellement dangereuse.

* Cette déclaration s’applique aux modèles utilisant le réfrigérant R-290.

! DANGER Continué

- Lorsque des composants électriques sont remplacés, ils doivent être adaptés à l'usage prévu et répondre aux spécifications correctes. Les directives de maintenance et d'entretien de Hoshizaki America doivent être respectées à tout moment. En cas de doute, consulter le service d'assistance technique de Hoshizaki America pour obtenir de l'aide.
- S'assurer que la charge réelle de réfrigérant est conforme à la taille de la pièce dans laquelle les pièces contenant du réfrigérant sont installées.
- S'assurer que les dispositifs et les sorties de ventilation fonctionnent correctement et ne sont pas obstrués.
- S'assurer que le marquage de l'équipement est toujours visible et lisible. Les indications et les panneaux illisibles doivent être corrigés.
- S'assurer que les tuyaux ou les composants de réfrigération sont installés dans un endroit où ils ne risquent pas d'être exposés à une substance susceptible de corroder les composants contenant du réfrigérant, à moins que les composants ne soient construits avec des matériaux intrinsèquement résistants à la corrosion ou qu'ils ne soient protégés de manière appropriée contre la corrosion.
- Une attention particulière doit être accordée aux points suivants afin de s'assurer qu'en travaillant sur les composants électriques, le boîtier n'est pas altéré de manière à ce que le niveau de protection soit affecté. Il s'agit notamment des dommages causés aux câbles, du nombre excessif de connexions, des terminaux non conformes aux spécifications d'origine, des dommages causés aux joints et du montage incorrect des presse-étoupes, etc.
- S'assurer que l'appareil (boîtier de commande/composant) est solidement fixé.
- S'assurer que les joints ou les matériaux d'étanchéité ne sont pas dégradés au point de ne plus pouvoir empêcher la pénétration d'atmosphères inflammables. Les pièces de rechange doivent être conformes aux spécifications de Hoshizaki America.
- N'appliquez aucune charge inductive ou capacitive permanente au circuit sans vous assurer que celle-ci ne dépassera pas la tension et le courant autorisés pour l'équipement utilisé.
- Les composants à sécurité intrinsèque sont les seuls types de composants sur lesquels il est possible de travailler sous tension en présence d'une atmosphère inflammable. L'appareil d'essai doit être adapté à la puissance requise.
- Ne remplacer les composants que par des pièces spécifiées par Hoshizaki America. D'autres pièces peuvent entraîner l'inflammation du réfrigérant dans l'atmosphère à la suite d'une fuite.
- Vérifier que le câblage ne sera pas soumis à l'usure, à la corrosion, à une pression excessive, à des vibrations, à des arêtes vives ou à tout autre effet environnemental négatif. Le contrôle doit également prendre en compte les effets du vieillissement ou des vibrations continues provenant de sources telles que les compresseurs ou les ventilateurs.

* Cette déclaration s’applique aux modèles utilisant le réfrigérant R-290.

B. Service Diagnosis

R-290 Class A3 Flammable Refrigerant Used*

DANGER

Risk of Fire or Explosion. Flammable Refrigerant Used.*

- Be sure to follow all Important Safety Information located at the beginning of this manual and at the beginning of section "III.A. Safety Precautions When Servicing."
- Servicing shall be done by trained service personnel with certified competence in handling flammable refrigerants to minimize the risk of possible ignition due to incorrect parts or improper service.*

Risque De Feu Ou D'Explosion. Fluide Frigorigène Inflammable Utilisé.*

- Assurez-vous de suivre toutes les informations importantes de sécurité qui se trouvent au début du présent manuel et au début de la section «III.A. Précautions de sécurité lors de l'entretien.»
- L'entretien doit être effectué par du personnel formé et certifié pour la manipulation de réfrigérants inflammables afin de réduire au minimum le risque d'inflammation dû à des pièces incorrectes ou à un entretien inadéquat.*

WARNING

- Risk of electric shock. Use extreme caution and exercise safe electrical practices.
- Risk of electric shock. Control switch in "OFF" position does not de-energize all loads (optional drain pump).
- Move the control switch to the "OFF" position, then unplug the appliance from the electrical outlet before servicing.
- Moving parts (e.g., fan blade) can crush and cut. Keep hands clear.
- **CHOKING HAZARD:** Ensure all components, fasteners, and thumbscrews are securely in place after the appliance is serviced. Make sure that none have fallen into the ice storage bin.
- Make sure all food zones in the appliance are clean after service.

DANGER

Models utilizing R-290 refrigerant should only be used on a dispenser unit/ ice storage bin without electrical components or one designed to be used with flammable refrigerants. See the nameplate for the refrigerant type in your model.*

* This statement applies to models utilizing R-290 refrigerant. See the nameplate for the refrigerant type in your model.

* Cette déclaration s'applique aux modèles utilisant le réfrigérant R-290. Consultez la plaque signalétique pour connaître le type de réfrigérant de votre modèle.

1. Ice Production Check

To check production, prepare a bucket or pan to catch the ice and a set of scales to weigh the ice. After the appliance has operated for 10 to 20 min., catch the ice production for 10 min. Weigh the ice to establish the batch weight. Multiply the batch weight by 144 for the total production in 24 hours. When confirming production or diagnosing low production, reference production information found in "VII.A. Specification and Performance Data."

2. Diagnostic Procedure

This diagnostic procedure is a sequence check that allows you to diagnose the electrical system and components. Before proceeding, check for correct installation, proper voltage per appliance nameplate, and adequate water pressure (10 PSIG to 113 PSIG).

Note:
- When checking high voltage (115VAC), always choose a neutral (W) wire to establish a good neutral connection.
- When checking low voltage (24VAC), always choose a neutral (LBU) wire to establish a good neutral connection.
- When checking control board DC voltage (5VDC), always place the red positive test lead from the multimeter to CB K7:1 red connector (open) pin 1, closest to CB K8:2 white connector. See "III.B.4. Control Board Check."
- When checking BC1 (ultrasonic sensor), check that the CB orange "BIN FULL" LED comes on when an object is placed in front of the sensor. This orange LED confirms power from CB K10 to the ultrasonic sensor and remains on constantly. If CB orange "BIN FULL" LED does not come on, see "III.B.5. Bin Control Check and Adjustment." Note: It is strongly advised to keep a known "good" ultrasonic sensor on your truck, for troubleshooting assistance.
- To speed up the diagnostic process, the 5-min. ice purge cycle may be bypassed by pressing the "SERVICE" button on the control board after the gear motor starts. **WARNING! Risk of electric shock. Care should be taken not to touch live terminals.**
- If the icemaker is in alarm, see "III.B.9. LED Lights and Audible Alarm Safeties."
- FM/FMR and EH (-C models) energize when "GM" LED turns on.
- MLKZ Model: CB X1 relay energizes LLV and SLV.
- CB monitors the following switches with 5VDC during the icemaking process: Control Switch (CS), High-Pressure Switch (HPS), Float Switch (FS), Compressor Control Relay/Gear Motor Protect Relay (CCR/GMPR), and Bin Control 2 (mechanical stand-alone or backup). When 5VDC is present across any of these switches, the switch is open.

1) Remove the front panel, then move the power switch to the "OFF" position. Move the control switch to the "DRAIN" position, then move the power switch back to the "ON" position. Replace the front panel in its correct position.
2) Allow the water system to drain for 5 min.
3) Remove the front panel. Move the power switch to the "OFF" position, then turn off the power supply.

4) Remove the control box cover and access CB.

5) Check the CB S2 dip switch settings, see "III.B.11. Controls and Adjustments" to assure that they are in the correct positions. For BC1 operation, S2 dip switch 7 must be in the "ON" position.

6) **Startup–CB "POWER" LED is on**. Turn on the power supply, then move the power switch to the "ON" position. Make sure the control switch is in the "ICE" position. CB "POWER" LED and "BIN FULL" orange LED is off.
Diagnosis CB "POWER" LED: Check that CB "POWER" LED is on. If not, check for 115VAC at control transformer; black (BK) wire to neutral (W). If 115VAC is not present, check the power switch and breaker. If 115VAC is present, check control transformer continuity. Replace as needed. Next, check for 24VAC at control transformer red (R) wire to neutral (LBU). If 24VAC is not present, check control transformer continuity. Replace as needed. If 24VAC is present, check 24VAC 1A fuse. If fuse is good, check for 24VAC at CB K8 #1 (W/R) to CB K8 #2 (LBU). If 24VAC is present and "POWER" LED is off, replace CB.
Diagnosis BC2 (mechanical backup): Check that the actuator paddle is properly positioned. Check continuity across BC2. If open, replace BC2. Next, check VDC at CB K8 #3 (GY) to CB K8 #4 (GY). When BC2 is closed 0VDC is read. Move the actuator paddle to open BC2. When open, 5VDC is present between CB K8 #3 (GY) and CB K8 #4 (GY). If 5VDC is not present when BC2 is open, replace CB. Return actuator to its normal position.
Diagnosis BC1 (ultrasonic sensor): If CB "POWER" LED is on and BC1 orange "BIN FULL" LED is on, check that the BC1 is connected to the CB white K10 connector. If not, connect BC1 wire connector to CB K10 connector. After 30 seconds, CB orange "BIN FULL" LED will turn off. If not, check for ice in front of sensor lens. If no ice is present, clean the lens with a warm, clean damp cloth. If cleaning the lens does not work, replace BC1.

7) **Fill Cycle** – "**WTRIN" LED is on**. Reservoir is empty and LFS and UFS are open. 90-sec. FT starts. WV energizes and fill cycle starts. LFS closes. Nothing occurs at this time. Reservoir continues to fill until UFS closes. When UFS closes, WV de-energizes, 90-sec. FT is terminated, and CB "WTRIN" LED turns off. 30-min. FZT and 30-sec. GM delay timer start. If UFS remains open longer than 90 sec. after LFS opens, FT exceeded and CB sounds a 1-beep alarm. WV remains energized until UFS closes. Alarm resets automatically when UFS closes.
Diagnosis: If reservoir is empty and "WTRIN" LED is off, confirm LFS status. See "III.B.6. Float Switch Check." If LFS is open and "WTRIN" LED is off, replace CB. If "WTRIN" LED is on, check that the reservoir fills. If not, check water supply line shut-off valve, water filters, and WV screen. If "WTRIN" LED is on and WV is off, check CB K2 #8 (O) to a neutral (LBU) for 24VAC. If 24VAC is not present, check CB K2 #9 (W/R) to a neutral (LBU) for 24VAC. If 24VAC is present on CB K2 #9 (W/R) and not on CB K2 #8 (O), replace CB. If 24VAC is present on CB K2 #8 (O), check continuity through WV solenoid. If open, replace WV. If WV is energized and refill exceeds FT with no water in the reservoir, check for DV leaking. If reservoir is full and overflowing check for open UFS. See "III.B.6. Float Switch Check and Cleaning." If UFS is closed, check that WV de-energizes. If not, check CB K2 #8 (O) to a neutral (LBU) for 24VAC. If 24VAC is present, replace CB. If WV de-energizes and water continues to fill the reservoir, replace WV.

8) **Ice Purge Cycle** – **"GM" LED is on**. 30-sec. GM delay timer terminates. GM, CCR/GMPR, FM/FMR, and EH (-C model) energize. Once CCR/GMPR energizes, 5VDC circuit closes through CCR/GMPR terminal #3 (W/O) and terminal #5 (W/O) and CB K9 #5 (W/O) and K9 #6 (W/O). After 5VDC circuit closes, 5-min. ice purge timer starts. To bypass the 5-min. Ice Purge Cycle, press the "SERVICE" button on CB after the "GM" LED turns on. **WARNING! Risk of electric shock. Care should be taken not to touch live terminals.**
Diagnosis: If "GM" LED is off, check that UFS closes and WV de-energizes. If UFS is closed, 30 sec. has passed, and "GM" LED remains off, replace CB. If "GM" LED is on and GM is off, check CB K1 #2 (BK) to a neutral (W) for 115VAC. If 115VAC is not present, check 115VAC power supply. If 115VAC is present, check CB K1 #3 (BK) to a neutral (W). If 115VAC is present on CB K1 #2 (BK) and not on CB K1 #3 (P), replace CB. If 115VAC is present on CB K1 #3 (P), check GM fuse, GM internal protector, GM windings and capacitor, and GM coupling between auger and GM. When GM energizes, CCR/GMPR energizes starting 5-min. ice purge timer. If FM/FMR does not start, check FM/FMR capacitor, FM/FMR windings, and FM/FMR bearings.

9) **Freeze Cycle** – **"COMP" and "GM" LEDs are on**. The 5-min. ice purge timer terminates. GM, EH, CCR, and FM/FMR continue. Comp or LLV/SLV (MLKZ model) energize. Ice production starts 4 to 6 min. after Comp or LLV/SLV (MLKZ model) energize depending on ambient and water conditions. As ice is produced, the water level in the reservoir drops. UFS opens. Nothing happens at this time. When LFS opens, WV energizes and refill cycle begins, FZT terminates, and FT starts.
FZT: 30-Min. Freeze Safety Timer – FZT starts when UFS closes and terminates when LFS opens. If LFS does not open within 30 min. of UFS closing, CB shuts down the icemaker and sounds a 5-beep alarm. See "III.B.9. LED Lights and Audible Alarm Safeties." To reset, turn the power supply off and on again. See "III.B.7. Diagnostic Tables" for troubleshooting details.
Icemaker Diagnosis (CCR/GMPR): 5-min. ice purge timer terminates, CB "COMP" LED is on and COMP or LLV/SLV (MLKZ model) energizes. If not, check for 5VDC between CB K7:1 red connector (open) pin 1 (closest to CB K8:2 white connector) and CB K9 connector #5 (W/O). If 5VDC is not present, replace CB. If 5VDC is present, check for 5VDC between CB K7:1 red connector (open) pin 1, (closest to CB K8:2 white connector) and CB K9 connector #6 (W/O). If 5VDC is present and CB "Comp" LED is off (CR, COMP, or LLV/SLV (MLKZ model) not energized), replace CB. If 5VDC is not present, check for 115VAC between CCR/GMPR terminal #7 (O) to CCR/GMPR terminal #8 (W) for 115VAC. If 115VAC is not present (GM not energized), see step 8 above. If 115VAC is present and CCR/GMPR contacts are open (5VDC present between CCR/GMPR terminals #3 (W/O) and #5 (W/O)), check CCR/GMPR solenoid voltage and solenoid continuity. Replace CCR/GMPR if necessary.
Icemaker Diagnosis (COMP or LLV/SLV (MLKZ model)): If "COMP" LED is on and COMP or LLV/SLV (MLKZ model) is not energized, check CB X1 relay BK wire to a neutral (W) and CB X1 relay V or R wire to a neutral (W) for 115VAC. If 115VAC is present on CB X1 BK wire and not on CB X1 V or R wire, replace CB. If 115VAC is present on CB X1 V or R wire and COMP or LLV/SLV (MLKZ model) is not energized, check for 115VAC at CB X1 Comp relay, Comp or LLV/SLV (MLKZ model). Check Comp internal overload (motor protector), start relay, and capacitors. If COMP is off on internal overload, let the COMP cool down and restart. If COMP internal overload does not reset, replace COMP and start components. Check LLV/SLV (MLKZ model) solenoid continuity.

TXV Diagnosis: If COMP is energized and evaporator is still not cooling, check TXV for proper operation. Remove TXV bulb and hold it in your hand, refrigerant low-side pressure should rise, place TXV bulb in ice water, refrigerant low-side pressure should drop. A 10 to 15 pound pressure swing between warm and cold conditions indicate a good TXV. If a 10 to 15 pound swing is not present, replace TXV. If TXV is operating properly, check for inefficient COMP or low refrigerant charge. See "VIII. Specification and Performance Data Sheets."

HPS Diagnosis: Check that the condenser coil is not clogged or restricted. Let refrigeration circuit pressures equalize. If HPS does not reset and pressures are equalized, replace HPS. If pressures are not equalized, reclaim refrigerant and diagnose refrigeration circuit restriction. Check that there are no restrictions in the refrigeration circuit.

TRV Diagnosis: The TRV (temperature response valve) is a compressor safety device. It is used to keep the compressor cool under extreme high temperatures. Once the TRV bulb senses a discharge temperature of 220°F (104°C) or above, the TRV starts throttling liquid into the suction line to cool the COMP.

10) **Refill Cycle – "GM", "COMP", and "WTRIN" LEDs are on**.

LFS opens. WV energizes and 90-sec. FT starts. Comp or LLV/SLV (MLKZ model), GM, CCR/GMPR, and FM/FMR continue. LFS closes. Nothing occurs at this time. Reservoir continues to fill until UFS closes. When UFS closes, WV de-energizes, 90-sec. FT terminates, and 30-min. FZT starts. If UFS remains open longer than 90 sec. after LFS opens, FT exceeded and CB sounds a 1-beep alarm. WV remains energized until UFS closes. Alarm resets automatically when UFS closes.

Diagnosis – Confirm that the water level has dropped and the UFS and LFS are open. See "III.B.6. Float Switch Check and Cleaning." Check that "WTRIN" LED is on. If LFS is open and "WTRIN" LED is off, replace CB. If "WTRIN" LED is on, check that the reservoir fills. If not, check water supply line shut-off valve, water filters, and WV screen. If "WTRIN" LED is on and WV is off, check CB K2 #8 (O) to a neutral (LBU) for 24VAC. If 24VAC is not present, check CB K2 #9 (W/R) to a neutral (LBU) for 24VAC. If 24VAC is present on CB K2 #9 (W/R) and not on CB K2 #8 (O), replace CB. If 24VAC is present on CB K2 #8 (O), check continuity through WV solenoid. If open, replace WV. If WV is energized and refill exceeds FT with no water in the reservoir, check for DV leaking. If reservoir is full and overflowing check for open UFS. See "III.B.6. Float Switch Check and Cleaning." If UFS is closed, check that WV de energizes. If not, check CB K2 #8 (O) to a neutral (LBU) for 24VAC. If 24VAC is present, replace CB. If WV de-energizes and water continues to fill the reservoir, replace WV.

Note: Each time UFS closes, 30-min. freeze timer starts. The 30-min. freeze timer resets when UFS closes again. If UFS does not close again within 30 min., CB shuts down the unit and sounds a 5-beep alarm every 5 sec.
See "III.B.9. LED Lights and Audible Alarm Safeties."

FT: 90-Sec. Low Water Safety Timer – When LFS opens, 90-sec. low water safety timer starts. If UFS does not close within 90 sec. after LFS opens (FT exceeded), CB sounds a 1-beep alarm and a 90-sec. shutdown cycle starts
See "III.B.9. LED Lights and Audible Alarm Safeties." Comp or LLV/SLV (MLKZ model) de-energizes. GM, CCR/GMPR, and EH continue. 90-sec. purge timer terminates, GM, EH, and CCR/GMPR de-energize. WV and 1-beep alarm continue until UFS closes.

11) **Drain Cycle**

a) **1-in-1 Drain Cycle:** DV energizes once every hour when the 1-in-1 drain cycle is activated (S2 dip switch 4 in the "OFF" position (factory default position)). GM, FM/FMR, Comp, LLV/SLV (MLKZ model), continue. DV energizes for 2 sec. every hour. This setting is recommended for optimum icemaker performance. The 1-in-1 drain cycle allows any sediment to drain from the evaporator without interrupting the icemaking process.

b) **1-in-12 Drain Cycle (optional):** DV energizes once every 12 hours when the 1-in-12 drain cycle is activated (S2 dip switch 4 in the "ON" position (optional)). 12-hour drain cycle timer terminates, Comp or LLV/SLV (MLKZ model) de-energize. GM, and FM/FMR continue. The 5-min. ice purge timer starts. When the 5-min. ice purge timer terminates, GM and FM/FMR de-energize. 10-min. DT starts, DV energizes. After 10-min. DT terminates, DV de-energizes icemaking process restarts and 12-hour drain cycle timer starts.

c) **Manual Drain:** Manual drain is used when servicing evaporator components and cleaning and sanitizing the unit. When the unit is making ice and the control switch is moved to the "DRAIN" position, there is a 3-sec. delay, then Comp or LLV/SLV (MLKZ models) de-energize and the 5-min. ice purge timer begins. When the 5-min. ice purge timer terminates, GM, and FM/FMR de-energize. DV energizes to drain the evaporator and reservoir. To avoid the 5-min. shutdown delay, turn off the power supply, then move the control switch to the "DRAIN" position. Turn on the power supply. DV energizes to drain the evaporator and reservoir. DV de-energizes when the control switch is moved to the "ICE" position.

12) **Shutdown**

a) **BC1 (ultrasonic sensor)**: When power is supplied to the icemaker, the CB green "POWER" LED turns on. As ice fills the storage bin to the level of activating BC1, the CB BC1 orange LED turns on. After the orange LED turns on, BC1 shutdown delay timer (S2 dip switch 1, 2, 3) starts. For a typical dispenser unit application, a 100-sec. shutdown delay is recommended. When used with a standard Hoshizaki storage bin, any shutdown delay setting is acceptable. See "III.B.11.b) BC1 (Ultrasonic Sensor) Shutdown Delay (S2 dip switch 1, 2, 3)." Once BC1 shutdown delay timer terminates, Comp or LLV/SLV (MLKZ models) de-energize and the 5-min. ice purge timer starts. When the 5-min. ice purge timer terminates, GM, CCR/GMPR, and FM/FMR de-energize.
Diagnosis: See "III.B.5.a) Bin Control 1 Check (ultrasonic sensor)."

Note: When BC1 and BC2 are applied–If BC1 fails to shut down the icemaker, BC2 opens, CB shuts down the icemaker and sounds a 9-beep alarm.

b) **BC2 (mechanical backup)**: BC2 opens (actuator paddle engaged). CB shuts down the icemaker immediately and sounds a 9-beep alarm.
Diagnosis: See "III.B.5.c) Bin Control 2 Check (mechanical backup)."

3. Freeze-Up Detection

Freeze-Up detection function is enabled when the Evaporator Thermistor is connected to the white K5 "EVAP" connection on CB.

1) **Low Evaporator Thermistor Temperature at GM Startup:**
Evaporator Thermistor (Evaporator Outlet) temperature is <-20°C (-4°F) at GM startup.
Audible 8 beep alarm. Orange "ALARM" LED blinks in sequence with audible alarm.

2) **Low Evaporator Thermistor Temperature in Ice making mode**:
Evaporator Thermistor (Evaporator Outlet) temperature reaches -30°C (-22°F).
1st detection - Comp and GM shut down, unit restarts once temperature reaches 0°.
2nd detection - Comp and GM shut down, unit restarts once temperature reaches 0°.
3rd consecutive detection - Appliance shuts down.
Audible 10 beep alarm. Orange "ALARM" LED blinks in sequence with audible alarm.

3) **Appliance Cycle Reset and CB Alarm Reset:**
Alarm Reset: Power supply or control switch turned off and on again: Appliance turns off, then re-starts at 1.Fill Cycle.

Legend: **BC1**–bin control 1 (ultrasonic sensor); **BC2**–bin control 2 (mechanical backup); **CB**–control board; **CCR**–compressor control relay (formerly GMPR gear motor protect relay); **Comp**–compressor; **DV**–drain valve; **EH**–evaporator heater (-C model); **FM**–fan motor; **FMR**–fan motor-remote; **GM**–gear motor; **HM–**head master; **LFS**–lower float switch; **LLV**–liquid line valve (MLKZ model); **SLV**–suction line valve (MLKZ model); **TRV–**temperature response valve; **TXV–**thermostatic expansion valve; **UFS**–upper float switch; **WV**–inlet water valve

4. Control Board Check

Before replacing a control board that does not show a visible defect and that you suspect is bad, always conduct the following check procedure. This procedure will help you verify your diagnosis.

1) Check CB S2 dip switch settings to assure that they are in the factory default position. For factory default settings, see "III.B.11. Controls and Adjustments."
   Note: S2 dip switch 7 determines bin control application:
   BC2 (mechanical backup only): S2 dip switch 7 in the "OFF" position. **WARNING! Do not put S2 dip switch 9 in the "OFF" position when S2 dip switch 7 is in the "OFF" position.**
   BC1 (ultrasonic sensor) or with BC2 (mechanical backup): S2 dip switch 7 in the "ON" position.

2) Move the power switch to the "ON" position and move the control switch to the "ICE" position. The "POWER" LED turns on. **Diagnosis "POWER" LED**: Check that the CB "POWER" LED is on. If not, check for proper supply voltage (115VAC) input to the control transformer (power switch, breaker, and fuse). Next, check for proper low-voltage (24VAC) output from the control transformer and that the 1A fuse is good. Check for 24VAC at CB K8 #1 (W/R) to CB K8 #2 (LBU). If 24VAC is present and the "POWER" LED is off, replace CB.

3) **BC1 (ultrasonic sensor) Power Supply (K10 connector):** CB K10 connector is supplied with a 60 kHz signal.
   Diagnosis: Check that CB BC1 "BIN FULL" orange LED is off. Disconnect BC1 from K10 connector. See Fig. 2. CB BC1 "BIN FULL" orange LED should come on. If not, replace CB. Reconnect BC1 to K10 connector. If LED is on, move ice away from lens. If no ice is present, clean the lens with a warm, clean damp cloth. If cleaning the lens does not work, replace BC1 (ultrasonic sensor).

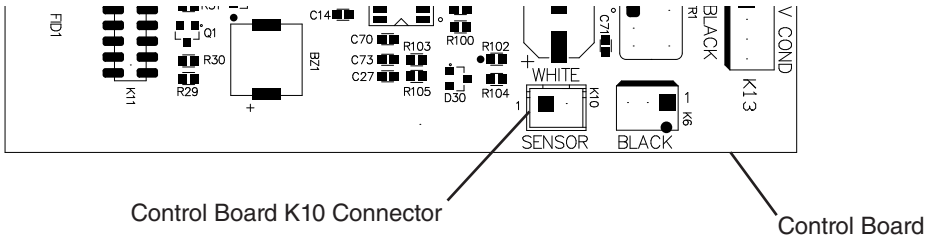

Fig. 1

4) **5VDC Output Checks:**

CB K9 Connector: Control Switch (CB K9 #1 and #2) (open contacts for icemaking, closed contacts for drain), High-Pressure Switch (CB K9 #3 and #4), Compressor Control Relay/Gear Motor Protect Relay (K9 #5 and #6).

CB K8 Connector: Bin Control 2 (K8 #3 and #4) and Float Switch (K8 #5 (common), #6 (upper), and #7 (lower)).

When checking 5VDC control voltage, always place the red positive test lead from the multimeter to the CB K7:1 red connector (open) pin 1, (closest to CB K8:2 white connector). See Fig. 2. Then place the black negative test lead from the multimeter to the corresponding pin to complete the 5VDC check.

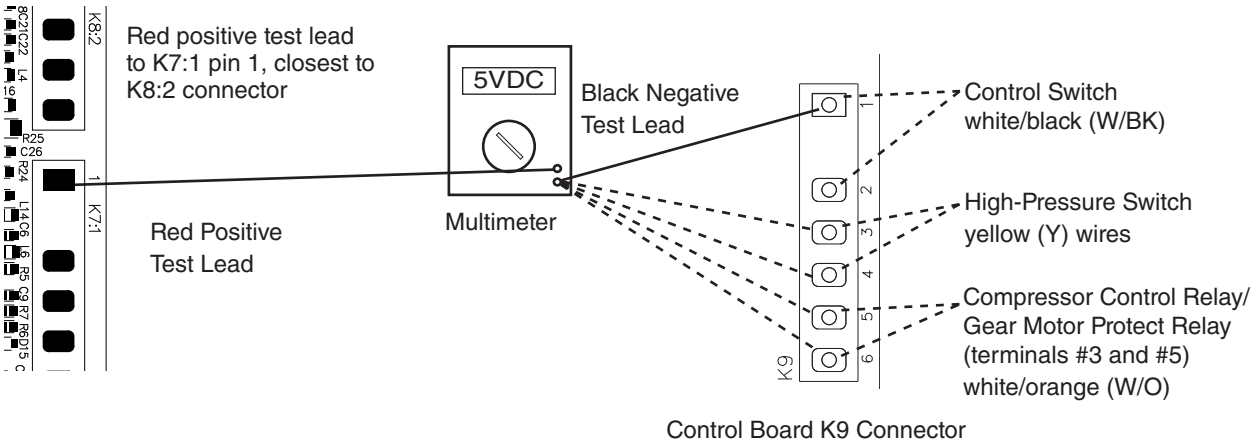

Fig. 2

a) **Control Switch** – CB K9 #1 (W/BK) and CB K9 #2 (W/BK):

5VDC is present between CB K7:1 red connector (open) pin 1, (closest to CB K8:2 white connector) and CB K9 #1 (W/BK) at all times. If 5VDC is not present, replace CB. When the control switch is in the "ICE" position, the control switch contacts are open. 0VDC is present between CB K7:1 red connector (open) pin 1, (closest to CB K8:2 white connector) and CB K9 #2 (W/BK). When in the "ICE" position, 5VDC is present between CB K9 #1 (W/BK) to CB K9 #2 (W/BK). When the control switch is in the "DRAIN" position, the control switch contacts are closed. 5VDC is present between CB K7:1 red connector (open) pin 1, (closest to CB K8:2 white connector), to CB K9 #1 (W/BK) or #2 (W/BK). If 5VDC is not present, replace CB. 0VDC is present from CB K9 #1 (W/BK) to CB K9 #2 (W/BK).

b) **High Pressure Switch** – CB K9 #3 (Y) and CB K9 #4 (Y):

5VDC is present between CB K7:1 red connector (open) pin 1, (closest to CB K8:2 white connector) and CB K9 #3 (Y) at all times. When the high-pressure switch is closed, 5VDC is present between CB K7:1 red connector (open) pin 1, (closest to CB K8:2 white connector) to CB K9 #3 (Y) and CB K9 #4 (Y). If 5VDC is not present, replace CB. When the high-pressure switch is closed, 0VDC is present at CB K9 #3 (Y) to CB K9 #4 (Y). When the high-pressure switch is open, 5VDC is present at CB K9 #3 (Y) to CB K9 #4 (Y). If the high-pressure switch is open and CB is not in alarm, replace CB. If 5VDC is present at CB K9 #3 (Y) and not at CB K9 #4 (Y), the high pressure switch is open and CB sounds a 3-beep alarm. Check continuity across the high-pressure switch (CB K9 #3 (Y) and CB K9 #4 (Y)).

c) **Compressor Control Relay/Gear Motor Protect Relay (CCR/GMPR)** –
CB K9 #5 (W/O) and CB K9 #6 (W/O): 5VDC is present from CB white K5 connector, pin closest to CB red K4 connector to CB K9 #5 (W/O) at all times. If 5VDC is not present, replace CB. When CCR/GMPR terminals #3 (W/O) and #5 (W/O) are open (CCR/GMPR de-energized), 5VDC is present between CB K9 #5 (W/O) and CB K9 #6 (W/O). When CCR/GMPR terminals #3 (W/O) and #5 (W/O) are closed (CCR/GMPR energized), 5VDC is present between CB K9 #5 (W/O) and CB K9 #6 (W/O). When CCR/GMPR terminals #3 (W/O) & #5 (W/O) are open CB may be in an 8-beep alarm. See "III.B.9. LED Lights and Audible Alarm Safeties."

d) **Bin Control 2 (mechanical backup)** –
CB K8 #3 (GY) and CB K8 #4 (GY): 5VDC is present from CB white K5 connector, pin closest to CB red K4 connector to CB K8 #3 (GY) at all times. If 5VDC is not present, replace CB. When BC(2) is closed (calling for ice), 5VDC is present from CB K7:1 red connector (open) pin 1, (closest to CB K8:2 white connector) to CB K8 #3 (GY) and CB K8 #4 (GY). If 5VDC is not present to either CB K8 #3 (GY) or CB K8 #4 (GY), replace CB. If 5VDC is present at CB K8 #3 (GY) and not to CB K8 #4 (GY), BC(2) is open. See "III.B.5.c) Bin Control 2 Check (backup)."

e) **Float Switch (LFS and UFS)** –
CB K8 #5 (BK) (common), CB K8 #6 (R) (upper), and CB K8 #7 (BU) (lower): 5VDC is present from CB K7:1 red connector (open) pin 1, (closest to CB K8:2 white connector) at all times. If not, replace CB. 5VDC is present from CB K7:1 red connector (open) pin 1, (closest to CB K8:2 white connector) to CB K8 #6 (R) (upper) and CB K8 #7 (BU) (lower) when FS is open. If 5VDC is present between CB K8 #5 (BK) and CB K8 #6 (R) (upper) or CB K8 #7 (BU) (lower), FS is open. For further FS diagnostics, see "III.B.6. Float Switch Check and Cleaning."

5) **Fill "WTRIN" LED is on:**
24VAC is present at CB K2 #9 (W/R) at all times. If not, confirm 24VAC from CB K2 #9 (W/R) to a neutral (LBU). When LFS open at startup or opens during normal operation, "WTRIN" LED turns on, fill timer (FT) starts, freeze timer (FZT) terminates (only during normal operation), and WV energizes. If LFS is open and "WTRIN" LED is off, confirm LFS status. See "III.B.6. Float Switch Check and Cleaning." If LFS is open and "WTRIN" LED is off, replace CB. If "WTRIN" LED is on and WV is not energized, check for 24VAC at CB K2 #8 (O) to a neutral (LBU). If 24VAC is not present at CB K2 #8 (O), replace CB. "WTRIN" LED turns off once UFS closes. If not, confirm UFS status. See "III.B.6. Float Switch Check and Cleaning." If UFS is closed and "WTRIN" LED is on, replace CB. If "WTRIN" LED is off and WV is open, check for 24VAC at CB K2 #8 (O). If 24VAC is present at CB K2 #8 (O), replace CB. If 24VAC is not present, check WV diaphragm.

6) **Ice Purge Cycle "GM" LED is on:**
When UFS closes, GM delay timer starts (5 or 30 sec. depending on CB S2 dip switch #7). Once GM delay timer terminates, "GM" LED turns on, GM and EH (-C model) energize and 5-min. ice purge timer starts. If GM does not energize 30 sec. after UFS closes, confirm UFS status. See "III.B.6. Float Switch Check and Cleaning." If UFS is closed and GM LED does not turn, replace CB. If "GM" LED is on and GM and EH are off, check for 115VAC from CB K1 #2 to a neutral (W). If 115VAC is not present, check 115VAC power supply connections from power switch. If 115VAC is present, check for 115VAC from CB K1 #3 to a neutral (W). If 115VAC is present on CB K1 #2 and not on CB K1 #3, replace CB.

7) **Freeze Cycle "GM" and "COMP" LED are on:**
The 5-min. ice purge timer terminates or the ice purge cycle bypass button ("SERVICE") is pressed, "COMP" LED turns on. To bypass the 5-min. Ice Purge Cycle, press the "SERVICE" button on CB after the "GM" LED turns on. **WARNING! Risk of electric shock. Care should be taken not to touch live terminals.** 115VAC is present between CB X1 relay power supply brown (BR) or black (BK) wire and neutral (W) at all times. If not, check 115VAC power supply wire connections from power switch. If "COMP" LED is not on after 5-min. ice purge timer terminates, replace CB. When "COMP" LED turns on, CR (if applicable) and compressor energize. If "COMP" LED is on and compressor relay (CR) (if applicable) and compressor are not, check for 115VAC from CB X1 relay power supply brown (BR) or black (BK) wire to neutral (W). If 115VAC is present, check X1 relay red (R), violet (V), or brown (BR) to neutral (W). If 115VAC is present on X1 relay brown (BR) or black (BK) and not on X1 relay red (R), violet (V), or brown (BR), replace CB.

8) **Refill "WTRIN" LED is on:** See "5) Fill "WTRIN" LED is on:" above.

Legend: **BC1**–bin control 1 (ultrasonic sensor); **BC2**–bin control 2 (mechanical backup); **CB**–control board; **CR**–compressor relay; **CCR/GMPR**–compressor control relay/gear motor protect relay; **EH**–evaporator heater (-C model); **FS**–float switch; **GM**–gear motor; **LFS**–lower float switch; **UFS**–upper float switch; **WV**–inlet water valve

Control Board

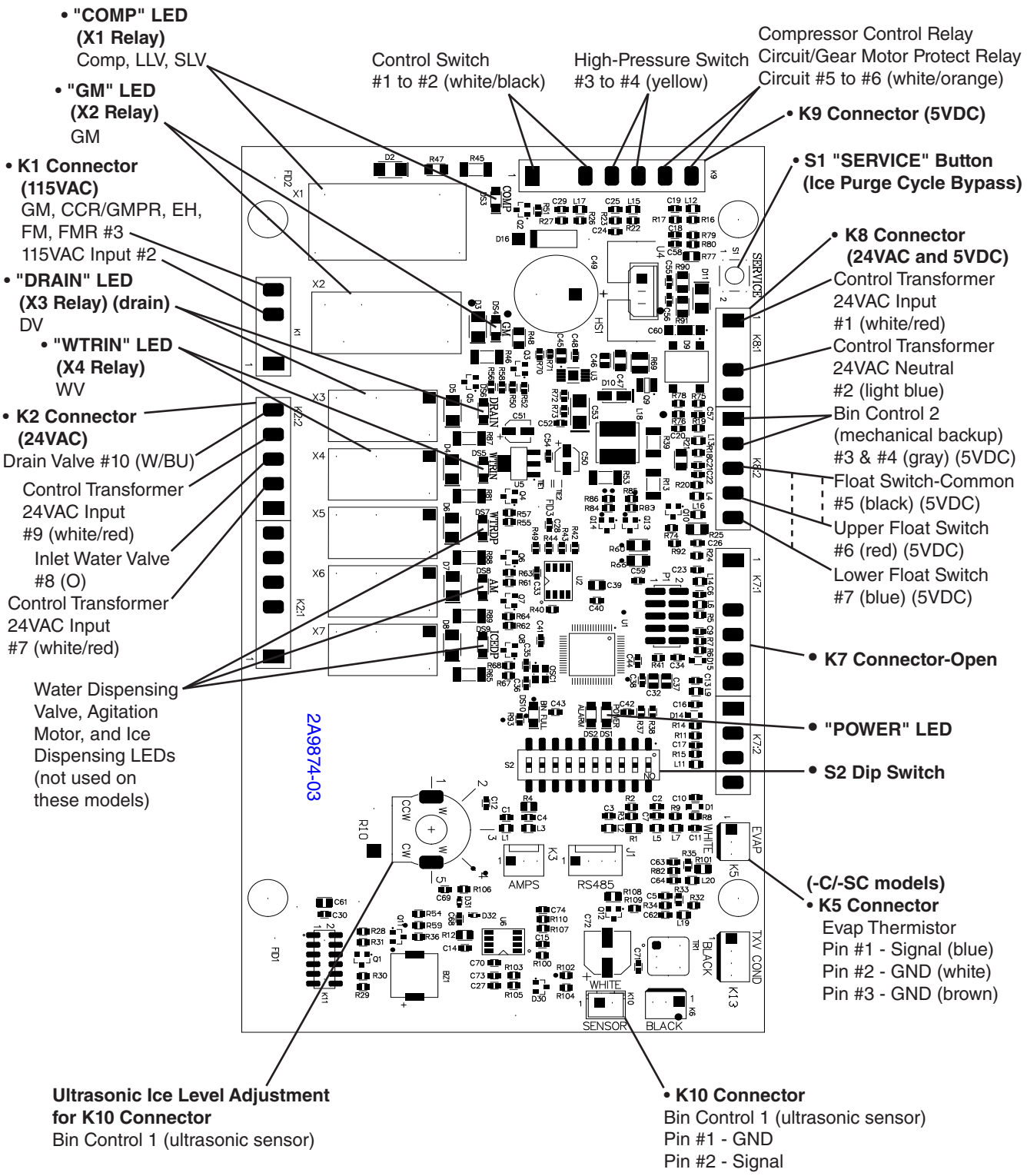

Control Board	
Part Number	2A9874-03

5. Bin Control Check and Adjustment

a) Bin Control 1 (ultrasonic sensor) Check

NOTICE
• Do not block the bin control lens with top kits or the icemaker will not operate properly. • Failure to properly adjust the bin control setting could result in water leakage, ice backup, and icemaker damage.

IMPORTANT
Make sure CB S2 dip switch 7 is in the "ON" position. This allows the control board to monitor BC1 (ultrasonic sensor) along with BC2 (mechanical backup) bin control.

Before replacing UBC sensor and CB(s) that does not show a visible defect and you suspect is bad, always conduct the following check procedure. This procedure will help you verify your diagnosis. Note: It is strongly advised to keep a known "good" UBC sensor on your truck, for troubleshooting assistance.

1) Turn off the power supply.

2) Remove the front panel, top panel, and control box cover.

3) Confirm that BC1 is connected to CB K10 connector. Wipe down BC1 lens with a warm, clean, damp cloth. If the bottom of the icemaker is not accessible in your application, remove the thumbscrew securing the BC1 housing, then remove the housing from the base. See Fig. 3.

4) Move the control switch to the "ICE" position, then move the power switch to the "ON" position.

5) Turn on the power supply to start the automatic icemaking process. Check that CB BC1 orange "BIN FULL" LED is off.
Diagnosis: If the CB BC1 orange "BIN FULL" LED is on, move ice away from lens. If no ice is present, clean the lens with a warm, clean damp cloth. If cleaning the lens does not work, replace BC1 (ultrasonic sensor). See step "3) BC1 (ultrasonic sensor) Power Supply," under "III.B.4. Control Board Check.

BC1 (ultrasonic sensor)

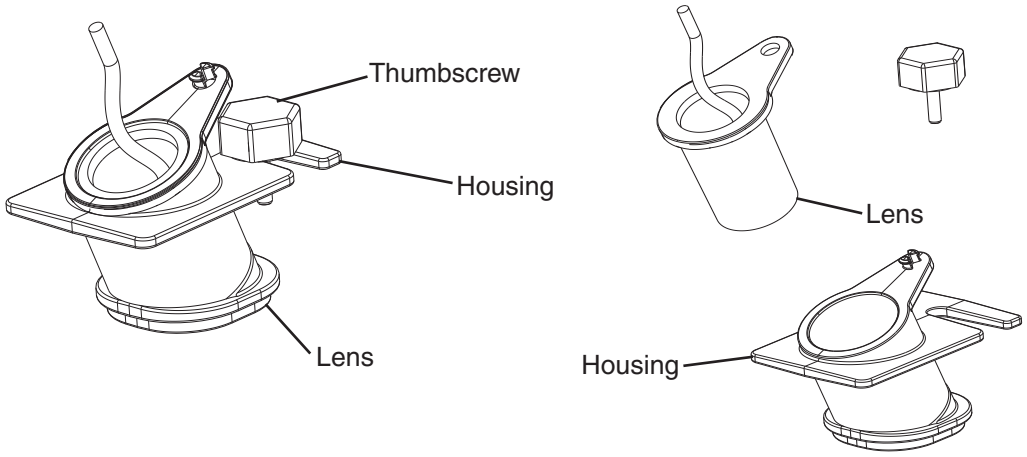

Fig. 3

6) Make sure CB "GM" LED is on. There is a delay of at least 30 sec. before the "GM" LED turns on after power-up. After CB "GM" LED turns on, press CB "SERVICE" button to bypass the 5-min. ice purge cycle. **WARNING! Risk of electric shock. Care should be taken not to touch live terminals.**

7) CB "GM" and "COMP" LEDs are on. Use an object to cover BC1 lens at the bottom of the icemaker. If the bottom of the icemaker is not accessible in your application, remove the thumbscrew securing BC1 housing, remove the housing from the base, then cover BC1 lens. See Fig. 3. The CB BC1 "BIN FULL" orange LED on turns on. After the orange LED turns on, BC1 shutdown delay timer starts. See "III.B.11.b) BC1 (Ultrasonic Sensor) Shutdown Delay (S2 dip switch 1, 2, 3)." Comp (LLV/SLV on MLKZ model) should de-energize immediately after the shutdown delay timer terminates. 5 min. later, GM and FM/FMR should de-energize.
Diagnosis: If CB BC1 "BIN FULL" orange LED is not on after covering the lens, replace BC1. If the appliance remains on after BC1 shutdown delay timer terminates and the 5-min. ice purge timer terminates, replace CB. If BC1 fails to shut down the icemaker and the level of ice activates BC2, the icemaker shuts down and a 9-beep alarm sounds. To reset, move the power switch to the "OFF" position, and then back to the "ON" position.

9) Remove the object covering the lens. If you removed BC1 housing from the base, replace it in its correct position, and secure it with the thumbscrew.

10) Move the power switch to the "OFF" position. Turn off the power supply, then proceed to "III.B.5.c) Bin Control 2 (mechanical backup) Check".

Legend: **BC1**–bin control 1 (ultrasonic sensor); **BC2**–bin control 2 (mechanical backup); **CB**–control board; **Comp**–compressor; **FM**–fan motor; **FMR**–fan motor-remote; **GM**–gear motor; **LLV**–liquid line valve; **SLV**–suction line valve

b) Bin Control 1 (ultrasonic sensor) Adjustment

⚠ WARNING

- Improper adjustment may adversely affect safety, performance, component life, and warranty coverage.
- On dispenser unit applications, do not increase ice level above the recommended setting listed below. Higher ice levels could result in icemaker movement, water leakage, or ice overflow.

NOTICE

Do not allow top kits or top kit risers (if applicable) to interfere with the bin control lens sensing area or the icemaker will not operate properly.

1) Move the power switch to the "OFF" position. Make sure the power supply is off to the icemaker and condensing unit. Remove the front panel to access the control box assembly. See Fig. 4. Remove the control box cover to access the control board. See Fig. 5.

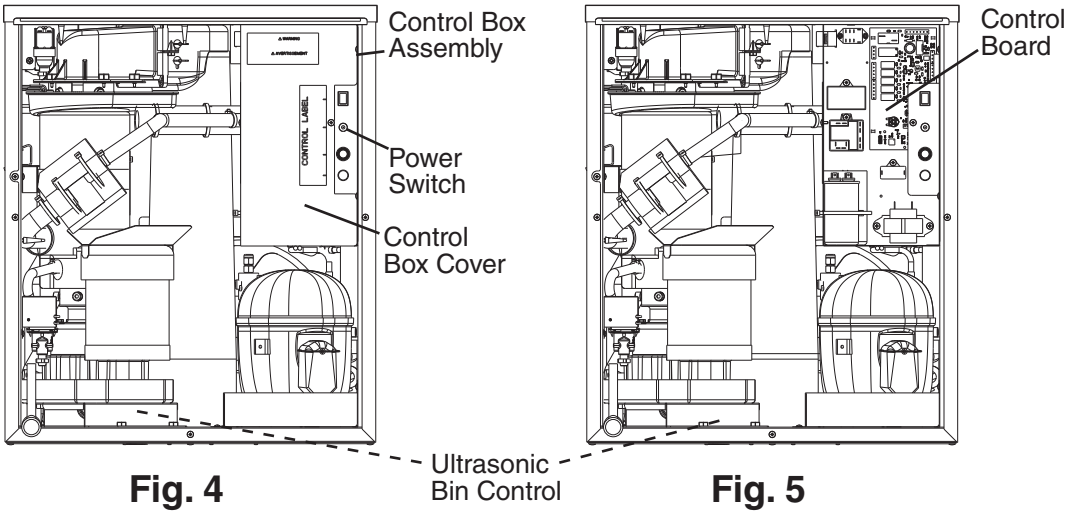

Fig. 4 **Fig. 5**

2) Confirm the correct control board bin control setting required for your application and adjust according to the following tables. See Fig. 8 and Fig. 9.

For Standard Ice Storage Bins, and Coca-Cola Freestyle® Dispenser Units

Application	Bin Control Ice Level Settings	
	Bin Control Setting	Shutdown Distance From Ultrasonic Bin Control Lens (Restart is 4 in. (102 mm) below shutdown distance)
Standard Ice Storage Bins	1 (Factory Default)	127 mm (5") Do not adjust dispensers to this setting.
Coca-Cola Freestyle® Dispensers	3	254 mm (10")
Optional Setting	4	356 mm (14")
	5	457 mm (18")

⚠ WARNING

Confirm that the final ice level location does not allow for icemaker movement, water leakage, or ice overflow.

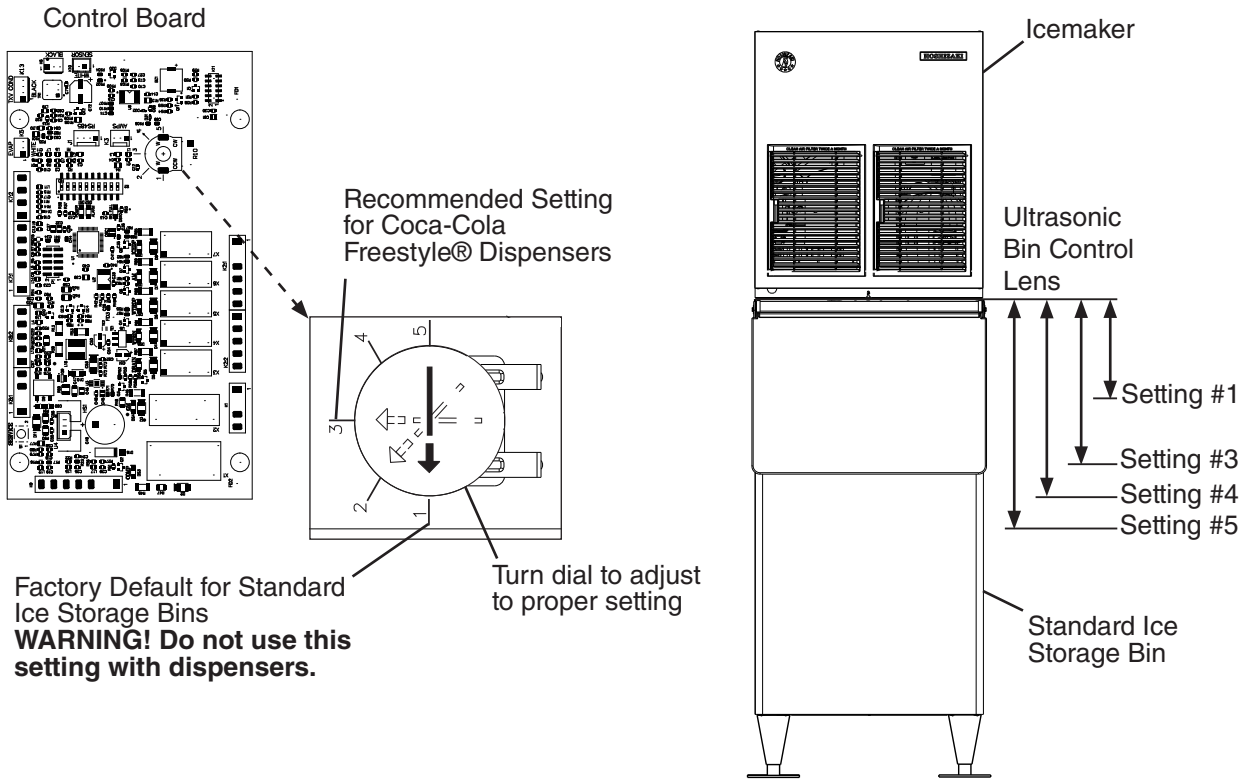

Model Shown:
F-622MAK-C with BD-300SF

Fig. 6

For Non-Hoshizaki Dispenser Units

Bin Control Ice Level Settings	
Bin Control Setting	Shutdown Distance From Bin Control Lens (Restart is 4 in. (102 mm) below shutdown distance)
1 (Factory Default)	127 mm (5") Do not adjust dispensers to this setting.
2	178 mm (7")
3	254 mm (10")
4	356 mm (14")
5	457 mm (18")

⚠ WARNING

Confirm that the final ice level location does not allow for icemaker movement, water leakage, or ice overflow.

NOTICE

The ice level must be lower than the top of the dispenser unit. Also, be sure the top kit or top kit riser (if applicable) are clear from the bin control lens sensing area.

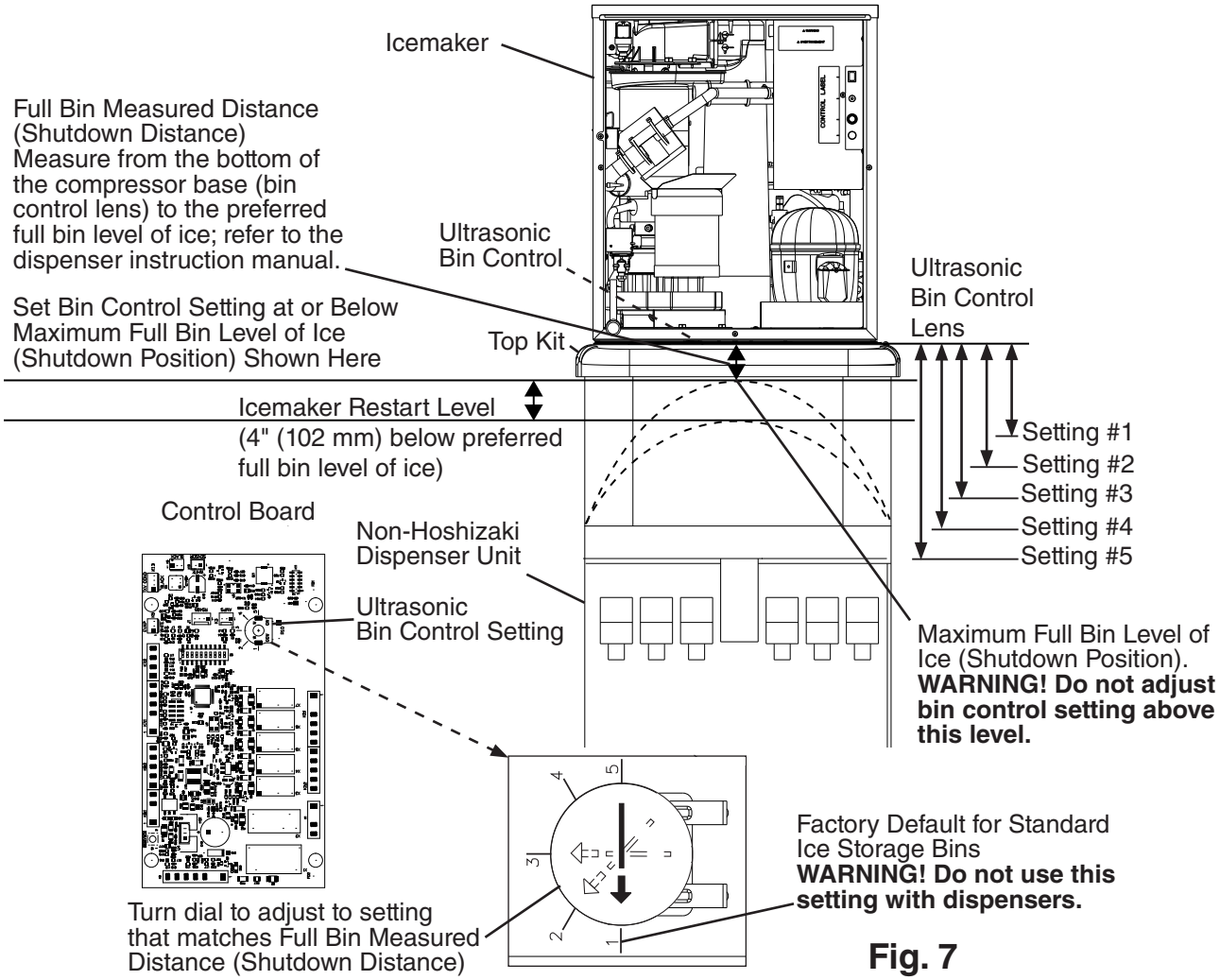

Fig. 7

c) Bin Control 2 (mechanical backup) Check

When the actuator paddle is not engaged BC2 is closed and the icemaker produces ice.

a) Bin Control 2 (mechanical backup): With CB S2 dip switch 7 placed in the "ON" position, BC2 is used as a backup bin control safety. When ice fills the chute and engages the actuator paddle, BC2 opens and CB shuts down the icemaker immediately and sounds a 9-beep alarm.

1) Make sure the power supply is off. Remove the front panel, top panel, and control box cover.

2) Remove the spout-to-chute strap connecting the spout to the chute assembly. See Fig. 8. Pull up the chute assembly slightly so that you can access the actuator paddle located in the top of the chute.

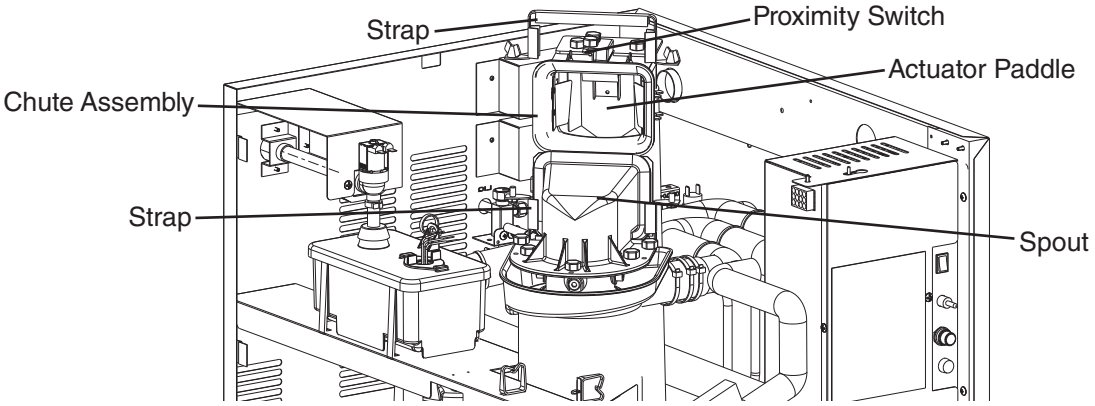

Model Shown: F-1022MRJKZ

Fig. 8

3) Move the power switch to the "ON" position.

4) Turn on the power supply to start the automatic icemaking process.

5) Make sure CB "GM" LED is on. There is a delay of at least 30 sec. before "GM" LED turns on after power-up. After "GM" LED turns on, press CB "SERVICE" button to bypass the 5-min. compressor delay. **WARNING! Risk of electric shock. Care should be taken not to touch live terminals.** The "COMP" LED turns on.

6) Press the actuator paddle located in the top of the chute. Comp (LLV and SLV on MLKZ model) and GM de-energize within 10 sec.
Diagnosis: If BC2 does not open and the icemaker continues to make ice (mechanical stand-alone or backup), CB fails to shutdown icemaker within 10 sec. or go into alarm, check that the actuator paddle is engaged. Check for continuity across BC2 wires.
If BC2 contacts are found open and the icemaker continues to make ice or CB fails to go into alarm (BC2), replace CB. If BC2 is closed with the actuator paddle engaged, replace BC2.
WARNING! If dip switch 9 is in the "OFF" position, the shut down delay is too long. This could lead to icemaker movement or ice overflow.

7) Move the power switch to the "OFF" position and turn off the power supply.

8) Replace the chute assembly and strap in their correct positions.

9) Move the power switch to the "ON" position.

10) Replace the control box cover, top panel, and front panel in their correct positions.

11) Turn on the power supply to start the automatic icemaking process.

Legend: **BC1**–bin control 1 (ultrasonic sensor); **BC2**–bin control 2 (mechanical backup); **CB**–control board; **Comp**–compressor; **FM**–fan motor; **FMR**–fan motor-remote; **GM**–gear motor; **LLV**–liquid line valve; **SLV**–suction line valve

6. Float Switch Check and Cleaning

a) Float Switch Check

A dual float switch is used to determine that there is sufficient water in the reservoir during fill and refill. CB monitors UFS to de-energize WV when UFS closes during fill and refill. CB monitors LFS to energize WV when LFS opens during the freeze cycle (refill). CB monitors the time between LFS opening and UFS closing (90-sec. low water safety). CB also monitors the time between UFS closing and LFS opening (30-min. freeze timer). No adjustment is required.

1) Remove the front panel and move the power switch to the "OFF" position. Move the control switch to the "DRAIN" position.
2) Move the power switch to the "ON" position.
3) Allow the water to drain from the reservoir, then move the power switch to the "OFF" position and the control switch to the "ICE" position.
4) Disconnect the molex plug from the control box and check continuity across FS wires. (BK) to (R) for UFS and (BK) to (BU) for LFS. See Fig. 9. With the water reservoir empty, FS switches are open. If open, continue to step 5. If closed, follow the steps in "III.B.6. Float Switch Cleaning." After cleaning the floats, check them again. Replace if necessary.
5) Reconnect the molex plug on the control box.
6) Move the power switch to the "ON" position and let the water reservoir fill.
7) Once the reservoir is full and GM starts, move the power switch to the "OFF" position.
8) Disconnect the molex plug from the control box and check continuity across FS wires. (BK) to (R) for UFS and (BK) to (BU) for LFS. They should be closed. Clean or replace if necessary.

Fig. 9

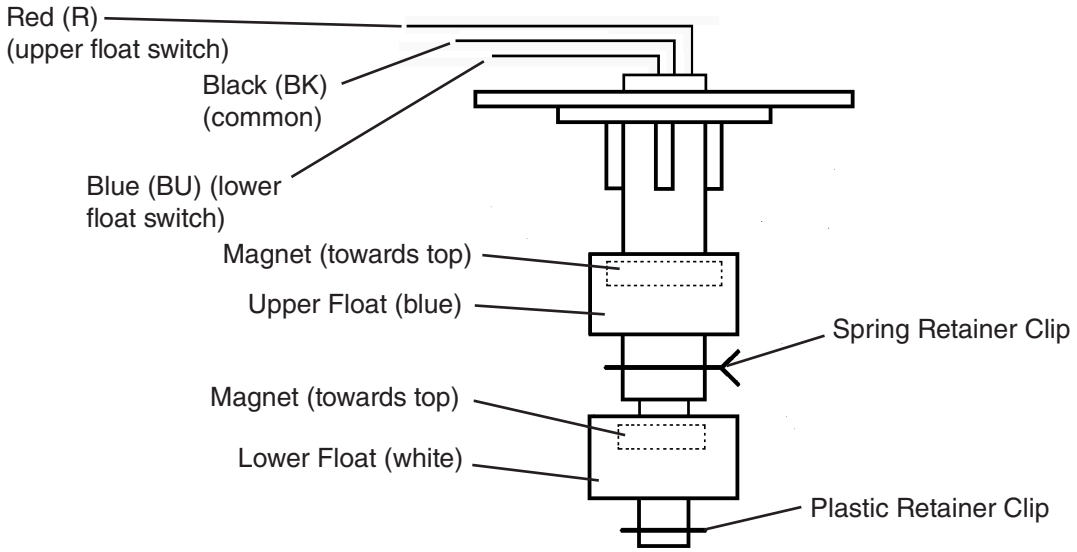

b) Float Switch Cleaning

Depending on local water conditions, scale may build up on FS. Scale on FS can cause the floats to stick. In this case, FS should be cleaned and checked.

1) Turn off the power supply.
2) Remove the float switch assembly from the reservoir cover. See Fig. 10.
3) Wipe down FS assembly with a mixture of 1 part Hoshizaki "Scale Away" and 25 parts warm water.
4) While not necessary, the floats can be removed from the shaft during cleaning. If you remove them, note that the blue float is on top. The floats must be installed with the magnets inside them towards the top of the switch. See Fig. 9. Installing the floats upside down will affect the timing of FS operation.
5) Rinse FS assembly thoroughly with clean water and replace in its original position.

Legend: **CB**–control board; **FS**–float switch; **GM**–gear motor; **LFS**–lower float switch; **UFS**–upper float switch; **WV**–inlet water valve

Fig. 10

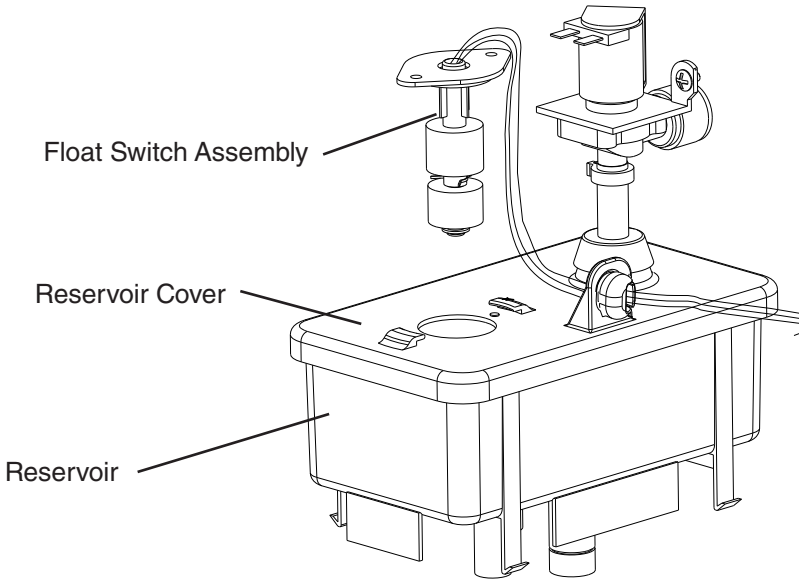

7. Diagnostic Tables

Before consulting the diagnostic charts, check for correct installation, proper voltage per appliance nameplate, and adequate water supply. Check control board using the steps in "III.B.4. Control Board Check."

No Ice Production - Possible Cause	
Startup	
1. Power Supply	a) Off, blown fuse, or tripped breaker.
	b) Loose connection.
	c) Bad contacts.
	d) Not within specifications.
2. Water Supply	a) Water supply off or pressure too low.
3. Power Switch (Control Box)	a) "OFF" position.
	b) Bad contacts.
4. Control Transformer	a) Coil winding opened.
5. Fuse (Control Box)	a) Blown.
6. BC1 (Ultrasonic Sensor)	a) Defective.
7. BC2 (Mechanical Backup)	a) Tripped with bin filled with ice. (9-beep alarm when used in conjunction with BC1 (ultrasonic sensor)
	b) Switch stuck open.
	c) Actuator paddle does not move freely.
8. High Pressure Switch	a) Bad Contacts.
	b) Dirty air filter or condenser.
	c) Ambient or condenser water temperature too warm.
	d) Refrigerant overcharged.
	e) Fan not operating (except water-cooled model).
	f) Refrigerant line or component restricted.
	g) Condenser water pressure too low or off (water-cooled model).
	h) Water regulating valve set too high (water-cooled model).
9. Control Switch	a) "DRAIN" position. 2-beep alarm if in "DRAIN" position for more than 15 min.
	b) Bad contacts.
Fill Cycle	
1. Control Board	a) No Power to inlet water valve.
	b) No power to float switch or not reading float switch condition.
2. Inlet Water Valve	a) Screen or orifice clogged.
	b) Coil winding opened.
3. Float Switch	a) Float does not move freely.
	b) Defective.
4. Drain Water Valve	a) Valve seat clogged and water leaking.
5. Hoses	a) Disconnected.

Ice Purge Cycle	
1. Control Board	a) No power to gear motor.
	b) No power to compressor control relay.
2. Gear Motor	a) Blown fuse.
	b) Internal protector open.
	c) Defective.
Freeze Cycle	
1. Compressor Control Relay	a) No voltage from gear motor.
	b) Defective.
2. Control Board	a) Defective.
3. Evaporator Thermistor	a) Defective
4. Start Relay	a) Bad contacts.
	b) Coil winding opened.
	c) Loose connections.
5. Capacitor (start or run)	a) Defective, weak.
6. Power Supply	a) Not within specifications.
7. Compressor	a) Defective.
8. Magnetic Contactor (if applicable)	a) Defective.
9. Drain Valve	a) Dirty, leaking by.
	b) Defective.
10. Water System	a) Water leaks.
11. Thermostatic Expansion Valve (TXV) (not adjustable)	a) Defective.
12. Liquid Line Valve (MLKZ models)	a) Defective.
13. Suction Line Valve (MLKZ models)	a) Defective.
14. Fan Motor (if applicable)	a) Compressor Control Relay/Magnetic Contactor defective.
	b) Defective capacitor.
	c) Defective.
	d) Control board defective.
15. Evaporator	a) Dirty.
	b) Damaged or defective.
16. Headmaster (C.P.R.) (remote air-cooled model)	a) Not operating properly and liquid line temperature too warm.
17. Water Supply Line (water-cooled model)	a) Condenser water pressure too low or off and high pressure control opens and closes frequently.
18. Water Regulating Valve (water-cooled model)	a) Set too high.
19. Refrigerant Line	a) Gas leaks.
	b) Refrigerant line or component restricted.
20. Temperature Response Valve (TRV) (not adjustable)	a) Defective

Refill	
1. Float Switch	a) Dirty/sticking.
	b) Defective.
2. Inlet Water Valve	a) Clogged or defective.
3. Water Supply	a) Off.
4. Control Board	a) No power to float switch or not reading float switch condition.
	b) No power to inlet water valve.
Shutdown	
1 BC1 (Ultrasonic Sensor) See "III.B.5. Bin Control 1 Check."	a) Dirty Bin Control lens.
	b) Defective.
2. BC2 (Backup) See "III.B.5. Bin Control 2 Check."	a) Actuator paddle does not move freely.
	b) Defective.
3. Control Board	a) Control board dip switches set incorrectly.
	b) In alarm.
	c) Defective.
Drain Cycle	
1. Drain Valve	a) Screen or orifice clogged.
	b) Defective.
2. Control Board	a) Defective.

8. Control Board and Control Board Layout

- A Hoshizaki exclusive control board is employed.
- All models are pretested and factory adjusted.

NOTICE
• Fragile, handle very carefully. • The control board contains integrated circuits, which are susceptible to failure due to static discharge. It is especially important to touch the metal part of the icemaker when handling or replacing the control board. • Do not touch the electronic devices on the control board or the back of the control board. • Do not change wiring and connections. Do not misconnect terminals. • Do not short out power supply to test for voltage. • Always replace the whole control board assembly if it goes bad.

a) Control Board Layout

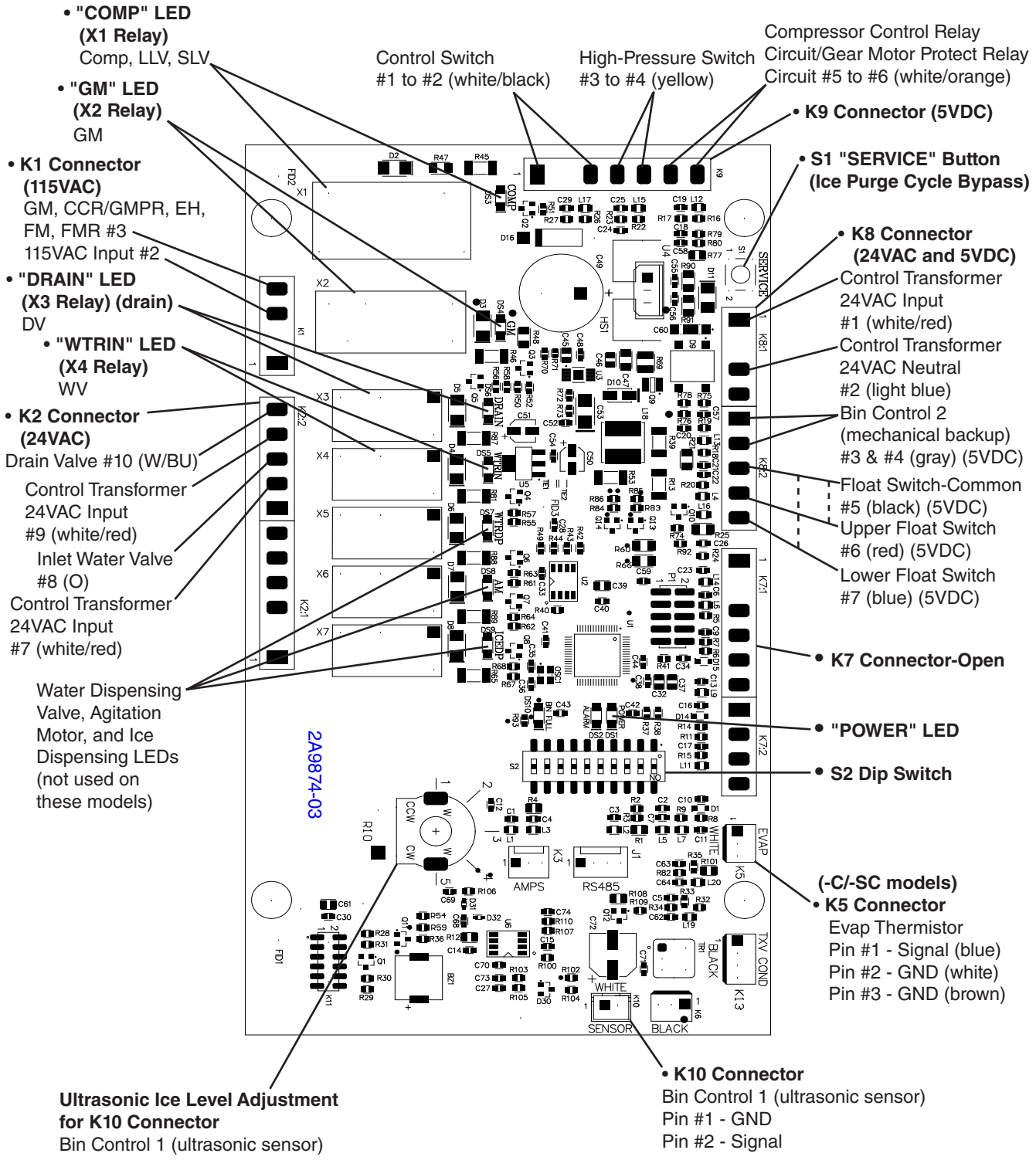

Control Board	
Part Number	2A9874-03

9. LED Lights and Audible Alarm Safeties

The "POWER" LED indicates proper control voltage and will remain on unless a control voltage problem occurs. For further details, see "II.A. Sequence of Operation Flow Chart."

Sequence Step	LED	Energized Components	Min.	Max.
Fill Cycle	WTRIN	WV	-	-
Ice Purge Cycle	GM	GM, EH, FM/FMR	5 min.	5 min.
Freeze Cycle (with refill)	GM, WTRIN* (refill), COMP	GM, EH, Comp, FM/FMR, LLV, SLV, WV* (refill)	-	*On until UFS closes. Alarm sounds after 90 sec.
Drain Cycle 1-in-1 hr. or 1-in-12 hr.	DRAIN	1-in-1 hr: DV 1-in-12 hr: DV (Icemaker status does not change)	2 sec. (1-in-1 hr.)	10 min. (1-in-12 hr.)

In case of alarm, the built-in alarm safeties shut down the unit, the orange "ALARM" LED turns on, and audible alarms sound as listed below.

No. of Beeps (every 5 sec.)	Type of Alarm	Notes and Reset Options
1	**Low-Water Safety** UFS open > 90 sec. after WV energized.	Automatic reset once water supply is restored and UFS closes.
2	**Control Switch** In "DRAIN" position longer than 15 min.	Automatic reset once the control switch is moved to the "ICE" position.
3	**High-Pressure Switch** First and second activation in 1 hr.	Automatic reset once pressure drops below the high pressure threshold and the high-pressure switch closes.
4	**High-Pressure Switch** Third activation in 1 hr.	Turn power off. Call for service. To avoid possible catastrophic failure, it is recommended to leave the icemaker off until this alarm is resolved.
5	**Freeze Timer** WV off > 30 min. since last WV activation.	Call for service. Manual reset. Turn power off and on again. Check for FS stuck (up), WV leaking by, TXV defective, LLV not opening, low charge, HM not bypassing, or inefficient Comp.
6	**Low Voltage** 92VAC ± 5% or less.	Green "POWER" LED turns off if voltage protection operates. Control voltage safeties automatically reset when voltage is corrected.
7	**High Voltage** 147VAC ± 5% or more.	
8	**a) Gear Motor Fuse or Protector Open** CCR contacts fail to close. **Used on all models.**	Turn power off. Check for GM fuse or protector open. Replace fuse or let protector cool and reset. If persistent trips occur, call for service.
	b) Evaporator Thermistor At GM startup Evaporator thermistor < -4°F (-20°C). **Used on cubelet (-C)(-SC)(-CB) models only.**	Turn power off. Call for service. To avoid possible catastrophic failure, it is recommended to leave the icemaker off until this alarm is resolved. Manual reset. Turn power off and on again.
9	**Bin Control 2 (mechanical backup)** Open Circuit Control Board K8 (#3 and #4) **Not used on DCM or self-contained models.**	Manual reset. Turn power off and on again. **Modular Flaker and Cubelet (-C)(-SC)(-CB) Models:** Control Board S2 Dip Switch #7 must be ON. **DCM and Self-Contained Models:** Control Board S2 Dip Switch #7 must be OFF.
10	**Evaporator Thermistor** Evaporator thermistor reaches -22°F (-30°C) for 3 consecutive cycles. **Used on cubelet (-C)(-SC)(-CB) models only.**	Turn power off. Call for service. To avoid possible catastrophic failure, it is recommended to leave the icemaker off until this alarm is resolved. Manual reset. Turn power off and on again.

Legend: **CCR**–compressor control relay; **Comp**–compressor; **DV**–drain valve; **EH**–evaporator heater; **FM**–fan motor; **FMR**–fan motor-remote; **FS**–float switch; **GM**–gear motor; **HM**–headmaster (C.P.R.); **LLV**-liquid line valve; **SLV**–suction line valve; **TXV**–thermostatic expansion valve; **UFS**–upper float switch; **WV**–inlet water valve

10. Ice Purge Cycle Bypass

To speed up the diagnostic process, the 5-min. ice purge cycle may be bypassed by pressing the "SERVICE" button on the control board after the gear motor starts.

WARNING! Risk of electric shock. Care should be taken not to touch live terminals.

11. Controls and Adjustments

NOTICE
Dip switches are factory set. Failure to maintain factory settings may adversely affect performance and warranty coverage. For more information, contact your Hoshizaki Certified Service Representative.

a) Default Dip Switch Settings

The S2 dip switch settings are factory-set to the following positions:

Control Board	Dip Switch No.	1	2	3	4	5	6	7	8	9	10
2A9874-03 (BC1 and BC2)	F-422MAK(-C) F-822M_K(Z)(-C) F-1022M_K(Z)(-C)(-SC)(-CB) F-1022MLKZ(-C)	OFF	OFF	OFF	OFF	OFF	OFF	ON	ON	OFF	OFF
	F-622M_K(Z)-C	ON	OFF	OFF	OFF	OFF	OFF	ON	ON	OFF	OFF

b) BC1 (Ultrasonic Sensor) Shutdown Delay (S2 dip switch 1, 2, 3)

Ultrasonic sensor shutdown delay is the delay between the ultrasonic sensor detecting ice (CB "BIN FULL" orange LED on) and the start of the shutdown sequence.

Note: For ice level adjustment, reference "III.B.3.b) Bin Control 1 Adjustment (Ultrasonic Sensor)" for this appliance.

S2 Dip Switch Setting			Ultrasonic Sensor Shutdown Delay
No. 1	No. 2	No. 3	
OFF	OFF	OFF	30 seconds
ON	OFF	OFF	
OFF	ON	OFF	
OFF	OFF	ON	
ON	ON	OFF	
OFF	ON	ON	
ON	ON	ON	

c) Drain Frequency Control (S2 dip switch 4)

This appliance is factory set for optimum performance with the 1-in-1 drain cycle (S2 dip switch 4 in the off position). This setting allows for removal of sediment from the evaporator without interrupting the icemaking process. An optional 1-in-12 drain cycle is available.

S2 Dip Switch Setting	Drain Timer Interval	Drain Valve Open
No. 4		
OFF (1-in-1)	1 Hour	2 Seconds
ON (1-in-12)	11 Hours 45 Minutes	10 Minutes

d) Continuous Dispensing Timer (S2 dip switch 5 & 6)

DCM models only. The dispense mode switch on DCMs must be in the "CONTINUOUS" position for this setting to apply. The factory setting allows ice to be dispensed continuously as long as the dispense solenoid is activated.

S2 Dip Switch Setting		Dispense Time
No. 5	No. 6	
OFF	OFF	No Limit
ON	OFF	20 Seconds
OFF	ON	60 Seconds
ON	ON	No Limit

e) Bin Control Selector (S2 dip switch 7)

The bin control is factory set. No adjustment required. **WARNING! Do not place S2 dip switch 7 in the "OFF" position on dispenser unit applications. This could lead to icemaker movement or ice overflow.**

S2 Dip Switch Setting	Bin Control Application	Gear Motor Delay
No. 7		
OFF	BC2 (mechanical stand-alone) (Standard Ice Storage Bins Only) **Use for emergency use only, if needed.**	5 seconds
ON	BC1 (ultrasonic sensor) Stand-Alone with BC2 (mechanical backup)	30 seconds

f) BC2 (Mechanical Backup) Shutdown Initiation Delay (S2 dip switch 8)

Only available when S2 dip switch 7 is in the "OFF" position. Factory set for normal operation. No adjustment is required. The shutdown initiation delay is the time between the mechanical bin control opening and dip switch 9 timer starting.

S2 Dip Switch Setting	Shutdown Delay
No. 8	
OFF	0.25 Seconds
ON	6.7 Seconds

g) BC2 (Mechanical Backup) Shutdown Time (S2 Dip Switch 9)

Only available when S2 dip switch 7 is in the "OFF" position. Factory set for optimum performance. Do not adjust. Dip switch 9 shutdown timing starts when Dip Switch 8 timer terminates.

S2 Dip Switch Setting	Shutdown Sequence
No. 9	
OFF	Slow timing (90s after dip switch 8 timer terminates, the COMP shuts down; 60 sec. later, the GM shuts down)
ON	Fast timing (immediate)(after dip switch 8 timer terminates, both COMP & GM shuts down at the same time)

h) Factory Use (S2 Dip Switch 10)

Factory set for optimum performance. Do not adjust.

12. Power Switch and Control Switch

The power switch and the control switch are used to control the icemaker. They are located on the control box.

a) Power Switch

The power switch has 2 positions, "OFF" and "ON." When the power switch is in the "OFF" position, no power is supplied to the components. When in the "ON" position, power is supplied to the control transformer and control board. The control board then supplies 5VDC to the control switch for unit operation.

b) Control Switch

The control switch has 2 positions, "ICE" and "DRAIN."
When the control switch is in the "ICE" position (open), icemaking begins.
When the control switch is in the "DRAIN" position (closed), the drain valve energizes.

1) ICE

When the control switch is in the "ICE" position, the control board reads an open circuit through the control switch contacts and starts the icemaking process.

2) DRAIN

When the control switch is in the "DRAIN" position, the control board reads a closed circuit through the control switch and the drain valve energizes.

C. Refrigeration Circuit Service

R-290 Class A3 Flammable Refrigerant Used*

! DANGER

Risk of Fire or Explosion. Flammable Refrigerant Used.*

- Be sure to follow all Important Safety Information located at the beginning of this manual and at the beginning of section "III.A. Safety Precautions When Servicing."
- Servicing shall be done by trained service personnel with certified competence in handling flammable refrigerants to minimize the risk of possible ignition due to incorrect parts or improper service.
- Confirm that capacitors are discharged: this shall be done in a safe manner to avoid possibility of sparking.
- A dry chemical or CO_2 fire extinguisher should be adjacent to the charging area. You must have a Class B chemical fire extinguisher available at all times.
- When breaking into the refrigerant circuit to make repairs – or for any other purpose – conventional procedures shall be used. However, for flammable refrigerants it is important that best practice be followed, since flammability is a consideration. The following procedure shall be adhered to:
  - safely remove refrigerant following local and national regulations
  - purge the circuit with inert gas
  - evacuate (optional for A2L)
  - purge with inert gas (optional for A2L)
  - open the circuit by cutting or brazing
- Confirm that no live electrical components and wiring are exposed while charging, recovering, or purging the system.
- You must have a combustible gas leak detector in the immediate work area at all times.
- Be sure the area is clear of refrigerant vapor before brazing.
- The refrigerant charge shall be recovered into the correct recovery cylinders if venting is not allowed by local and national codes. For appliances containing flammable refrigerants, the system shall be purged with oxygen-free nitrogen to render the appliance safe for flammable refrigerants. This process might need to be repeated several times. Compressed air or oxygen shall not be used for purging refrigerant systems.

*This statement applies to models utilizing R-290 refrigerant. See the nameplate for the refrigerant type in your model.

! DANGER Continué

Risque De Feu Ou D'Explosion. Fluide Frigorigène Inflammable Utilisé.*

- Assurez-vous de suivre toutes les informations importantes de sécurité qui se trouvent au début du présent manuel et au début de la section «III.A. Précautions de sécurité lors de l'entretien.»
- L'entretien doit être effectué par du personnel formé et certifié pour la manipulation de réfrigérants inflammables afin de réduire au minimum le risque d'inflammation dû à des pièces incorrectes ou à un entretien inadéquat.
- S'assurer que les condensateurs sont déchargés : cette opération doit être effectuée en toute sécurité afin d'éviter tout risque d'étincelle.
- Un extincteur à poudre chimique ou à CO_2 devrait être installé à proximité de la zone de chargement. Un extincteur chimique de classe B doit être disponible à tout moment.
- Pour pénétrer dans le circuit du réfrigérant afin d'effectuer des réparations ou pour toute autre raison, des procédures conventionnelles doivent être utilisées. Toutefois, pour les réfrigérants inflammables, il est important de suivre les meilleures pratiques, car l'inflammabilité est un facteur à prendre en considération. La procédure suivante doit être respectée:
  - éliminer le réfrigérant en toute sécurité conformément aux réglementations locales et nationales
  - purger le circuit avec du gaz inerte
  - évacuer (en option pour A2L)
  - purger avec du gaz inerte (en option pour A2L)
  - ouvrir le circuit par coupure ou brasage
- S'assurer qu'aucun composant ou câblage électrique sous tension n'est exposé lors de la charge, de la récupération ou de la purge du système.
- Vous devez avoir un détecteur de fuite de gaz combustible dans la zone de travail immédiate en tout temps.
- Assurez-vous que la zone est dégagée de la vapeur de réfrigérant avant de braser.
- La charge réfrigérante doit être récupérée dans les bouteilles de récupération correctes si la ventilation n'est pas autorisée par les codes locaux et nationaux. Pour les appareils contenant des réfrigérants inflammables, le système doit être purgé avec de l'azote exempt d'oxygène pour assurer la sécurité de l'appareil pour les réfrigérants inflammables. Ce processus peut être répété plusieurs fois. L'air comprimé ou l'oxygène ne doivent pas être utilisés pour la purge des systèmes de réfrigérants.

*Cette déclaration s'applique aux modèles utilisant du R-290. Consultez la plaque signalétique pour connaître le type de réfrigérant utilisé sur votre modèle.

⚠ WARNING

- Wear appropriate personal protective equipment (PPE) when servicing the appliance.
- Notify all persons in the immediate area that you are working with a flammable refrigerant.
- Do not use silver alloy or copper alloy containing arsenic.

a) Refrigerant Recovery

Using proper refrigerant practices, place piercing valves toward the end (crimped area) of the high and low-side process tubes, then recover the refrigerant into an approved container or device.

1) Move the control switch to the "OFF" position, then unplug the appliance from the electrical outlet.

b) Brazing

2) Prior to brazing, purge with nitrogen gas for 2 min., flowing at a pressure of 3 to 5 PSIG. **⚠ DANGER! For appliances containing flammable refrigerants, the system shall be purged with oxygen-free nitrogen to render the appliance safe for flammable refrigerants. This process might need to be repeated several times. Compressed air or oxygen shall not be used for purging refrigerant systems.**
3) Braze/repair/replace damaged component or fittings while purging with nitrogen gas, flowing at a pressure of 3 to 5 PSIG.

NOTICE

- Do not leave the system open for longer than 15 min. when replacing or servicing parts. The Polyol Ester (POE) oils used in R-290 applications can absorb moisture quickly. Therefore it is important to prevent moisture from entering the system when replacing or servicing parts.
- Always install a new drier every time the sealed refrigeration system is opened. Do not replace the drier until after all other repair or replacement has been made. Install the new drier with the arrow on the drier in the direction of the refrigerant flow.
- When brazing, protect the drier by using a wet cloth to prevent the drier from overheating. Do not allow the drier to exceed 250°F (121°C).

4) Use soap bubbles to check for leaks. Raise the pressure using nitrogen gas (190 PSIG). Do not use any refrigerant as a mixture with pressurized air for leak testing.
5) Once leak checking is complete, release the nitrogen gas from the system.

c) Evacuation

6) Attach a vacuum pump to the system. Be sure the high-side charging hose is connected to the field-installed high-side access valve.

IMPORTANT
The vacuum level and vacuum pump may be the same as those for current refrigerants. However, the rubber hose and gauge manifold to be used for evacuation and refrigerant charge should be exclusively for POE oils.

7) Turn on the vacuum pump, then open the high-side valve on the gauge manifold. Never allow the oil in the vacuum pump to flow backwards.

8) Allow the vacuum pump to pull down to a 29.9" Hg vacuum. Evacuating period depends on pump capacity.

9) Close the high-side valve on the gauge manifold.

10) Disconnect the gauge manifold hose from the vacuum pump and attach it to a refrigerant service cylinder. Remember to loosen the connection and purge the air from the hose. See the nameplate for the required refrigerant charge. Hoshizaki recommends only virgin refrigerant or reclaimed refrigerant which meets the requirements of AHRI Standard 700 (latest edition) be used.

d) Recharge

! DANGER

- In addition to conventional charging procedures, the following requirements shall be followed:
  - Ensure that contamination of different refrigerants does not occur when using charging equipment. Hoses or lines shall be as short as possible to minimize the amount of refrigerant contained in them.
  - Cylinders shall be kept in an appropriate position according to the instructions.
  - Ensure that the refrigerating system is earthed (grounded) prior to charging the system with refrigerant.
  - Label the system when charging is complete (if not already).
  - Extreme care shall be taken not to overfill the refrigerating system.
- The system shall be leak-tested on completion of charging but prior to commissioning. A follow up leak test shall be carried out prior to leaving the site.

- En plus des procédures de charge conventionnelles, les exigences suivantes doivent être respectées :
  - S'assurer qu'aucune contamination de différents réfrigérants ne se produit lors de l'utilisation de l'équipement de charge. Les tuyaux ou conduites doivent être aussi courts que possible afin de minimiser la quantité de réfrigérant qu'ils contiennent.
  - Les bouteilles doivent être maintenues dans une position appropriée conformément aux instructions.
  - S'assurer que le système de réfrigération soit mis à la terre avant de charger le système avec du réfrigérant.
  - Étiqueter le système lorsque la charge est terminée (si cela n'a pas déjà été fait).
  - Il faut veiller à ne pas trop remplir le système de réfrigération.
- Avant de recharger le système, celui-ci doit être testé sous pression avec le gaz de purge approprié. Le système doit être soumis à un essai de fuite à la fin de la charge, mais avant la mise en service. Un test de contrôle de fuite doit être effectué avant de quitter le site.

11) R-290 can be charged in either the liquid or vapor state. Liquid charge is preferred. If refrigerant charging is done in the liquid state, place the service cylinder on the scales; **if the service cylinder is not equipped with a dip tube, invert the service cylinder, then place it on the scales.** Open the high-side valve on the gauge manifold.

12) Allow the system to charge with liquid until the proper charge weight is met.

13) Close the high-side valve on the gauge manifold. If charging is complete, skip to step 10.

14) If necessary, add any remaining charge to the system through the low-side.
NOTICE! **To prevent compressor damage, use a throttling valve or liquid dispensing device to add the remaining liquid charge through the low-side refrigerant access valve with the compressor running.** Close the refrigerant cylinder valve and let the low-side refrigerant equalize to the system, then close the low-side manifold gauge.

15) Pinch off (crimp down) the process tubes just below the piercing valves.

16) Remove the piercing valves. Cut the process tubes to remove the piercing valve holes.

17) Confirm there are no leaks from the pinched off process tubes, then braze the process tubes closed. ⚠ **DANGER! Be sure there is no refrigerant leak before brazing.**

18) Use a combustible gas leak detector or soap bubbles to check for leaks again.

19) Place red sleeves over the process tubes.

20) Plug the appliance back into the electrical outlet.

D. Component Service Information

R-290 Class A3 Flammable Refrigerant Used*

! DANGER

Risk of Fire or Explosion. Flammable Refrigerant Used.*

- Be sure to follow all Important Safety Information located at the beginning of this manual and at the beginning of section "III.A. Safety Precautions When Servicing."
- Component parts shall be replaced with like components. So as to minimize the risk of possible ignition due to incorrect parts.
- This appliance should be diagnosed and repaired only by qualified service personnel to reduce the risk of death, electric shock, serious injury, or fire.
- Repair and maintenance to electrical components shall include initial safety checks and component inspection procedures. If a fault exists that could compromise safety, then no electrical supply shall be connected to the circuit until it is satisfactorily dealt with. If the fault cannot be corrected immediately but it is necessary to continue operation, an adequate temporary solution shall be used. This shall be reported to the owner of the equipment, so all parties are advised.
- Confirm that capacitors are discharged: this shall be done in a safe manner to avoid possibility of sparking.
- Confirm that no live electrical components and wiring are exposed while charging, recovering, or purging the system.
- Confirm that there is continuity of earth bonding (grounding).

*This statement applies to models utilizing R-290. See the nameplate for the refrigerant type in your model.

! DANGER Continué

Risque D'Incendie ou D'Explosion. Fluide Frigorigène Inflammable Utilisé.*

- Assurez-vous de suivre toutes les informations importantes de sécurité qui se trouvent au début du présent manuel et au début de la section «III.A. Précautions de sécurité lors de l'entretien.»
- Les pièces doivent être remplacées par des pièces similaires, de manière à réduire au minimum le risque d'inflammation dû à des pièces incorrectes.
- Cet appareil ne doit être diagnostiqué et réparé que par un personnel qualifié afin de réduire les risques de mort, d'électrocution, de blessures graves ou d'incendie.
- La réparation et l'entretien des composants électriques incluent les contrôles de sécurité initiaux et les procédures d'inspection des composants. En cas de défaut susceptible de compromettre la sécurité, aucune alimentation électrique ne doit être connectée au circuit tant que le problème n'a pas été résolu de manière satisfaisante. Si le défaut ne peut être corrigé immédiatement mais qu'il est nécessaire de poursuivre l'exploitation, une solution temporaire adéquate doit être utilisée. Cela doit être signalé au propriétaire de l'équipement, afin que toutes les parties soient informées.
- S'assurer que les condensateurs sont déchargés : cette opération doit être effectuée en toute sécurité afin d'éviter tout risque d'étincelle.
- S'assurer qu'aucun composant ou câblage électrique sous tension n'est exposé lors de la charge, de la récupération ou de la purge du système.
- S'assurer de la continuité de la mise à la terre.

NOTICE

When replacing a component listed below, see the notes to help ensure proper operation.

Extruding Head	• Seal bolts must be replaced once removed because seal material is one-time use only. • If new seal bolts do not have preapplied threadlocker, apply Loctite 243 or equivalent threadlocker to seal bolt threads. • Tighten down the new seal bolts to a torque of 11.1 ft-lb/15 N·m.
Compressor	• Install a new drier and PTC relay.
Upper and Lower Bearings	• Inspect the upper bearing for wear. See "III.D.1. Upper Bearing Wear Check." Replace if necessary. • When replacing the upper bearing it is advised to also change the lower bearing at the same time.
Evaporator	• Install a new drier. • Inspect the mechanical seal and O-ring prior to installing the new evaporator. If worn, cracked, or scratched, the mechanical seal should also be replaced.
Gear Motor	• Install a new gear motor capacitor.
TRV Valve	• R-448A Only

* Cette déclaration s'applique aux modèles utilisant le réfrigérant R-290. Consultez la plaque signalétique pour connaître le type de réfrigérant utilisé sur votre modèle.

Evaporator Assembly

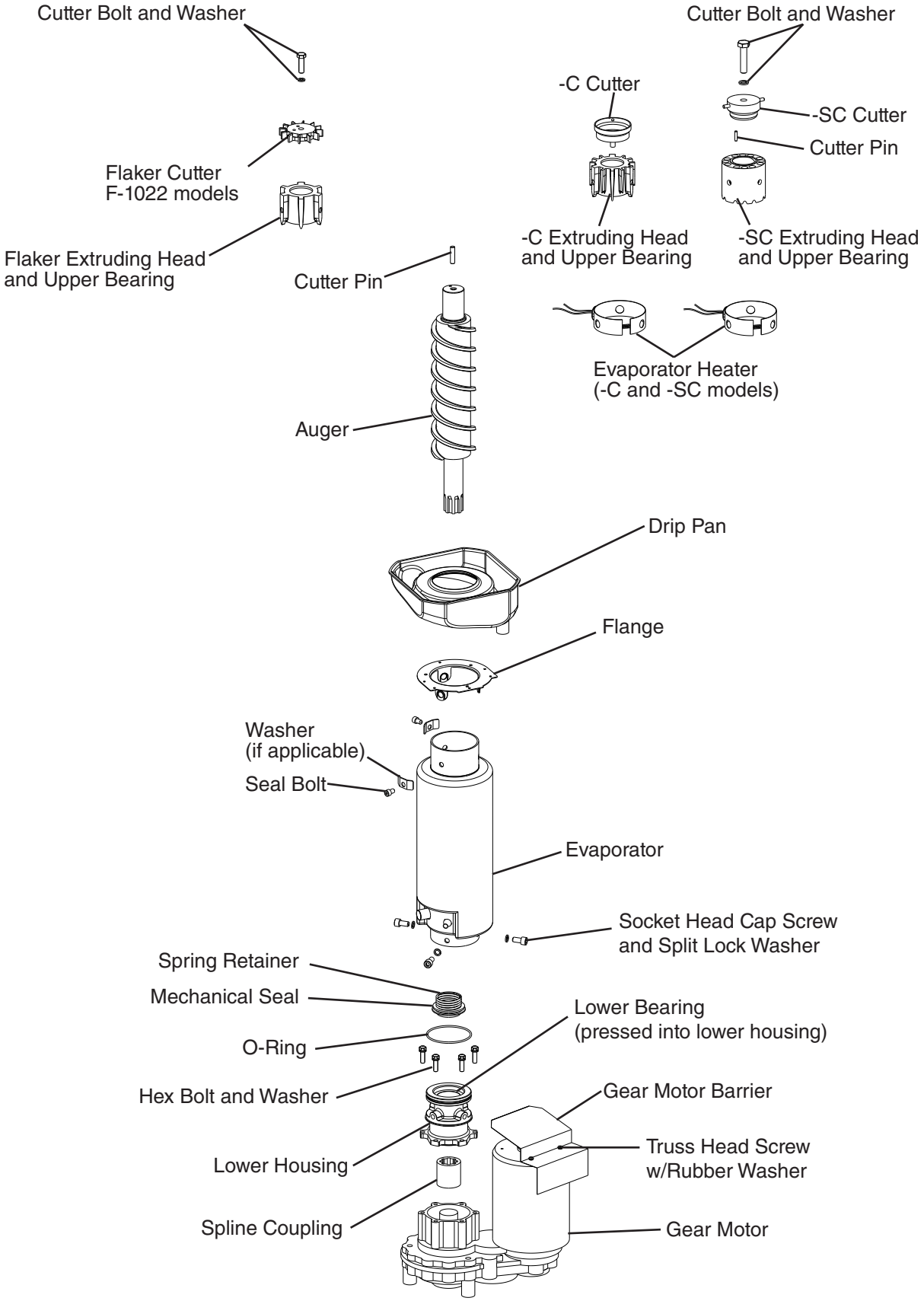

Fig. 11

1. Upper Bearing Wear Check

To ensure that the bearing inside the extruding head does not exceed the wear tolerance of .02", follow the instructions below.

1) Remove the front panel. Move the power switch to the "OFF" position, then turn off the power supply.
2) Remove the top and side panels.
3) Remove the strap connecting the spout to the chute assembly, then remove the spout.
4) Remove the bolt (if applicable) or cutter from the auger and lift off the cutter and washer (if applicable).
5) Replace the bolt in the auger (if applicable). See Fig. 12. Move the auger towards you and then try to insert a .02" round stock or pin gauge in between the back side of the auger shaft and the bearing surface. Check several locations around the auger shaft. If the gauge goes between the shaft and the bearing at any point or if the bearing is scratched or cracked, both the top bearing in the extruding head and the lower bearing in the housing should be replaced. Instructions for removing the extruding head and housing are located later in this procedure.

   Note: Replacing the bearing requires a bearing press adaptor. If one is not available, replace the whole extruding head and housing.

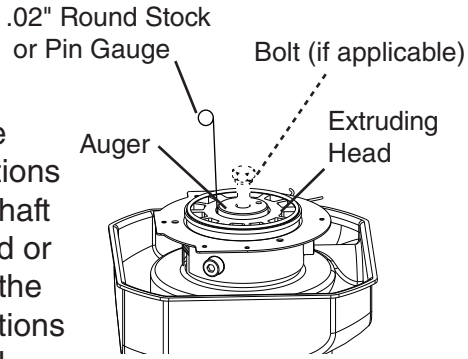

Fig. 12

6) Replace the washer (if applicable), cutter, and cutter bolt (if applicable).
7) Replace the spout.
8) Replace the top and side panels in their correct positions.
9) Move the power switch to the "ON" position, then turn on the power supply.
10) Replace the front panel in its correct position.

2. Removal and Replacement of Cutter

1) Remove the front panel. Move the power switch to the "OFF" position, then turn off the power supply.
2) Remove the top and side panels.
3) Remove the strap connecting the spout to the chute assembly, then remove the spout.
4) Remove the bolt (if applicable) or cutter and lift off the cutter.
5) Install the new cutter. Replace the bolt (if applicable).
6) Replace the spout.
7) Replace the top and side panels in their correct position.
8) Move the power switch to the "ON" position, then turn on the power supply.
9) Replace the front panel in its correct position.

IMPORTANT! **Seal Bolt Removal and Installation Instructions:** Seal bolts must be replaced once removed because seal material is one-time use only. If new seal bolts do not have preapplied threadlocker, apply Loctite 243 or equivalent threadlocker to seal bolt threads.

- Torque for F-1022 and Smaller: 11.1 ft-lb/15 N·m

3. Removal and Replacement of Extruding Head

1) Drain the water from the evaporator.
   a) Remove the front panel, then move the power switch to the "OFF" position.
   b) Move the control switch to the "DRAIN" position.
   c) Move the power switch to the "ON" position and allow the water to drain from the evaporator.
   d) Move the power switch to the "OFF" position, then turn off the power supply.
2) Remove the top and side panels.
3) Remove the strap connecting the spout to the chute assembly, then remove the spout.
4) Remove the cutter bolt (if applicable) or cutter and lift off the cutter and washer (if applicable).
5) Remove the seal bolts from the extruding head and lift off the extruding head.
6) Place the new extruding head in place and tighten down with new seal bolts. See "Seal Bolt Removal and Installation Instructions" above.
7) Replace the washer (if applicable), cutter, cutter bolt (if applicable), and spout.
8) Replace the top and side panels in their correct positions.
9) Move the control switch to the "ICE" position.
10) Move the power switch to the "ON" position, then turn on the power supply.
11) Replace the front panel in its correct position.

4. Removal and Replacement of Auger

1) Drain the water from the evaporator.
   a) Remove the front panel, then move the power switch to the "OFF" position.
   b) Move the control switch to the "DRAIN" position.
   c) Move the power switch to the "ON" position and allow the water to drain from the evaporator.
   d) Move the power switch to the "OFF" position, then turn off the power supply.
2) Remove the top and side panels.
3) Remove the strap connecting the spout to the chute assembly, then remove the spout.
4) Remove the extruding head seal bolts. Using the cutter, lift out the auger assembly.
5) Remove the cutter bolt (if applicable), cutter, washer (if applicable), and dowel pin (if applicable). Remove the extruding head from the auger and place on the new auger.
6) Install the new auger.
7) Replace the removed parts in the reverse order of which they were removed.
   Note: Be sure to use new seal bolts. See "Seal Bolt Removal and Installation Instructions" above.
8) Replace the top and side panels in their correct positions.
9) Move the control switch to the "ICE" position.
10) Move the power switch to the "ON" position, then turn on the power supply.
11) Replace the front panel in its correct position.

5. Removal and Replacement of Evaporator

IMPORTANT
Always install a new drier every time the sealed refrigeration system is opened. Do not replace the drier until after all other repair or replacement has been made.

1) Drain the water from the evaporator.
   a) Remove the front panel, then move the power switch to the "OFF" position.
   b) Move the control switch to the "DRAIN" position.
   c) Move the power switch to the "ON" position and allow the water to drain from the evaporator.
   d) Move the power switch to the "OFF" position, then turn off the power supply.
2) Remove the top and side panels.
3) Recover the refrigerant and store it in an approved container.
4) Remove the strap connecting the spout to the chute assembly, then remove the spout.
5) Disconnect the water hoses.
6) Remove the extruding head seal bolts. Using the cutter, lift out the auger assembly.
7) Remove the insulation and the expansion valve bulb on the suction line.
8) Disconnect the inlet and outlet tubing.
9) Remove the socket head cap screws and split lock washers securing the evaporator to the lower housing.
10) Lift off the evaporator.
11) Inspect the mechanical seal and O-ring prior to installing the new evaporator. The mechanical seal consists of two parts. One moves along with the auger, and the other is fixed on the lower housing. If the contact surfaces of these two parts are worn, cracked, or scratched, the mechanical seal may cause water leaks and should be replaced. Instructions for removing the mechanical seal and lower housing are located later in this procedure.
12) Make sure the lower mechanical seal is in place, then place the evaporator in position. Secure the evaporator to the lower housing using the socket head cap screws and split lock washers.
13) Remove the drier, then place the new drier in position.
14) Braze all fittings while purging with nitrogen gas flowing at a pressure of 3 to 5 PSIG.
15) Use an electronic leak detector or soap bubbles to check for leaks. Add a trace of refrigerant to the system (if using an electronic leak detector), and then raise the pressure using nitrogen gas (140 PSIG). Do not use R-290 or R-448A as a mixture with pressurized air for leak testing.
16) Evacuate the system, and charge it with refrigerant. For air-cooled and water-cooled models, see the nameplate for the required refrigerant charge. For remote models, see the rating label inside the icemaker. Hoshizaki recommends only virgin refrigerant or reclaimed refrigerant which meets AHRI Standard 700 (latest edition) be used.

17) Replace the removed parts in the reverse order of which they were removed. Note: Be sure to use new seal bolts. See "Seal Bolt Removal and Installation Instructions" earlier in this section.

18) Replace the top and side panels in their correct positions.

19) Move the control switch to the "ICE" position.

20) Move the power switch to the "ON" position, then turn on the power supply.

21) Replace the front panel in its correct position.

6. Removal and Replacement of Mechanical Seal and Lower Housing

6a. Mechanical Seal

1) Drain the water from the evaporator.
   a) Remove the front panel, then move the power switch to the "OFF" position.
   b) Move the control switch to the "DRAIN" position.
   c) Move the power switch to the "ON" position and allow the water to drain from the evaporator.
   d) Move the power switch to the "OFF" position, then turn off the power supply.
2) Remove the top and side panels.
3) Remove the strap connecting the spout to the chute assembly, then remove the spout.
4) Remove the extruding head seal bolts. Using the cutter, lift out the auger assembly.
5) The mechanical seal consists of two parts. One moves along with the auger, and the other is fixed on the lower housing. If the contact surfaces of these two parts are worn, cracked, or scratched, the mechanical seal may cause water leaks and should be replaced.
6) Remove the socket head cap screws and split lock washers securing the evaporator to the lower bearing housing.
7) Raise the evaporator up to access the lower housing.
8) Remove the O-ring and mechanical seal from the housing. If only replacing the mechanical seal, proceed to step 11.

NOTICE
To help prevent water leaks, be careful not to damage the surfaces of the O-ring or mechanical seal.

6b. Lower Housing

9) Remove the hex bolts w/washers securing the lower housing to the gear motor and remove the lower housing from the gear motor. If inspection of the upper bearing inside the extruding head (see "III.D.1. Upper Bearing Wear Check") indicates that it is out of tolerance, replace both it and the bearing inside the lower housing.
   Note: Replacing the bearing requires a bearing press adaptor. If one is not available, replace the whole extruding head and lower housing.

10) Mount the lower housing on the gear motor.

11) Install the O-ring and lower part of the mechanical seal on the lower housing.

12) Make sure the lower mechanical seal is in place, then place the evaporator in position. Secure the evaporator to the lower housing using the socket head cap screws and split lock washers.

13) Install the auger assembly with the upper part of the mechanical seal attached.

14) Replace the removed parts in the reverse order of which they were removed.
   Note: Be sure to use new seal bolts. See "Seal Bolt Removal and Installation Instructions" earlier in this section.

15) Replace the top and side panels in their correct positions.

16) Move the control switch to the "ICE" position.

17) Move the power switch to the "ON" position, then turn on the power supply.

18) Replace the front panel in its correct position.

7. Removal and Replacement of Gear Motor

1) Drain the water from the evaporator.
   a) Remove the front panel, then move the power switch to the "OFF" position.
   b) Move the control switch to the "DRAIN" position.
   c) Move the power switch to the "ON" position and allow the water to drain from the evaporator.
   d) Move the power switch to the "OFF" position, then turn off the power supply.
2) Remove the top and side panels.
3) Remove the strap connecting the spout to the chute assembly, then remove the spout.
4) Remove the hex head bolts and washers securing the lower housing to the gear motor. Lift the evaporator up slightly.
5) Remove the socket head cap screws and split lock washers securing the gear motor.
6) Disconnect the gear motor wiring, then remove the gear motor.
7) Remove the gear motor bracket and spline coupling from the old gear motor and place on the new gear motor.
8) Install the new gear motor and re-connect the electrical wires.
9) Replace the removed parts in the reverse order of which they were removed.
10) Replace the top and side panels in their correct positions.
11) Move the control switch to the "ICE" position.
12) Move the power switch to the "ON" position, then turn on the power supply.
13) Replace the front panel in its correct position.

IV. Maintenance

The appliance must be maintained in accordance with the instruction manual and labels provided. Consult with your local Hoshizaki Certified Service Representative about maintenance service.

⚠ WARNING

- Only qualified service technicians should service the appliance.
- To reduce the risk of electric shock, do not touch the icemaker power switch or control switch with damp hands.
- **Before Servicing:** Move the icemaker's power switch to the "OFF" position. Turn off the power supply. Place the disconnect (if applicable) in the off position. Lockout/Tagout to prevent the power supply from being turned back on inadvertently.
- **CHOKING HAZARD:** Ensure all components, fasteners, and thumbscrews are securely in place after any maintenance is done to the appliance. Make sure that none have fallen into the dispenser unit/ice storage bin.

A. User Maintenance Schedule

The user maintenance schedule below is a guideline. More frequent maintenance may be required depending on water quality, the appliance's environment, and local sanitation regulations.

Maintenance Schedule		
Frequency	**Area**	**Task**
Daily	Scoop	Clean the ice scoop using a neutral cleaner. Rinse thoroughly after cleaning.
Bi-Weekly	Air Filters	Inspect. Wash with warm water and neutral cleaner if dirty.
Monthly	Icemaker Exterior	Wipe down with a clean, soft cloth. Use a damp cloth containing a neutral cleaner to wipe off oil or dirt build up. Clean any chlorine staining (rust colored spots) using a non-abrasive cleanser.

B. Service Maintenance Schedule

The service maintenance schedule below is a guideline. More frequent maintenance may be required depending on water quality, the appliance's environment, and local sanitation regulations.

Monthly	External Water Filters	Check for proper pressure and change if necessary.
	Underside of Icemaker and Top Kits; Bin Door and Snout	Wipe down with a clean cloth and warm water.
	Ultrasonic Bin Control Lens	Wipe down the bin control lens, (located on the bottom of the icemaker) with a neutral cleaner. Rinse thoroughly after cleaning.
Every 6 Months	Icemaker and Dispenser Unit/Ice Storage Bin	Clean and sanitize per the cleaning and sanitizing instructions provided in the instruction manual or on maintenance label.
	Evaporator Condensate Drain Pan and Gear Motor Drain Pan	Wipe down with a clean cloth and warm water. Slowly pour one cup of sanitizing solution (prepare as outlined in the sanitizing instructions provided in the instruction manual) into the evaporator condensate drain pan and then slowly pour one cup into the gear motor drain pan. Be careful not to overflow the pans. Repeat with a cup of clean water to rinse.
	Icemaker and Dispenser Unit/Ice Storage Bin Drains	Check to make sure they are clear.
	Extruding Head Seal Bolts	Inspect for leakage around seal bolts. Tighten (see torque values below) or replace as necessary. Seal bolts must be replaced once removed because seal material is one-time use only. If new seal bolts do not have preapplied threadlocker, apply Loctite 243 or equivalent threadlocker to seal bolt threads. • *Torque for F-1022 and Smaller:* 11.1 ft-lb/15 N·m
Yearly	Inlet Water Valve and Drain Valve	Close the water supply line shut-off valve and drain the water system. Clean the inlet water valve screen and clean and inspect the drain valve.
	Water Hoses	Inspect the water hoses and clean/replace if necessary.
	Condenser	Inspect. Clean if necessary by using a brush or vacuum cleaner.
	Icemaker	Inspect for oil spots, loose components, fasteners, and wires.
	Upper Bearing (extruding head)	Check for wear using .02" round stock or pin gauge. Replace both upper bearing and lower bearing if wear exceeds factory recommendations.
After 3 Years, then Yearly	Upper Bearing (extruding head); Lower Bearing and O-Ring (lower housing); Mechanical Seal; Evaporator Cylinder; Auger	Inspect. Replace both upper bearing and lower bearing if wear exceeds factory recommendations. Replace the mechanical seal if the seal's contact surfaces are worn, cracked, or scratched.

V. Preparing the Appliance for Periods of Non-Use

NOTICE
Only qualified service technicians should service this appliance.

1) Move the control switch to the "OFF" position. **WARNING! To reduce the risk of electric shock, do not touch the control switch or plug with damp hands.**
2) Close the water supply line shut-off valve, then open the water supply line drain valve.
3) Allow the line to drain by gravity.
4) Move the control switch to the "DRAIN" position.
5) Allow the water system to drain for 1 min.
6) Attach a compressed air or carbon dioxide supply to the water supply line drain valve.
7) Move the control switch to the "ICE" position.
8) Blow the water supply line out using the compressed air or carbon dioxide supply.
9) Close the water supply line drain valve.
10) Move the control switch to the "OFF" position, then unplug the appliance from the electrical outlet.
11) Remove the screws securing the upper rear panel, then remove it.
12) Remove the clamp securing the reservoir outlet hose to the reservoir. Disconnect the reservoir outlet hose from the reservoir.
13) Attach a compressed air or carbon dioxide supply to the reservoir outlet hose.
14) Plug the appliance back in, then move the control switch to the "DRAIN" position.
15) Blow out the reservoir outlet hose using the compressed air or carbon dioxide supply.
16) Move the control switch to the "OFF" position, then unplug the appliance from the electrical outlet.
17) Reconnect the reservoir outlet hose to the reservoir, then secure with the clamp. Make sure all hoses are connected and secure.
18) Replace the rear panel in its correct position.
19) Clean the storage bin by using a neutral cleaner. Rinse thoroughly after cleaning.

VI. Decommissioning and Disposal

R-290 Class A3 Flammable Refrigerant Used*

! DANGER

Risk of Fire or Explosion. Flammable Refrigerant Used.*

- Be sure to follow all Important Safety Information located at the beginning of this manual and at the beginning of section "III.A. Safety Precautions When Servicing."
- Servicing shall be done by trained service personnel with certified competence in handling flammable refrigerants to minimize the risk of possible ignition due to improper service.
- Follow handling instructions carefully in compliance with national regulations.
- Dispose of properly in accordance with federal or local regulations.
- Do not puncture refrigerant tubing. Risk of fire or explosion due to puncture of refrigerant tubing; follow handling instructions carefully.
- When removing refrigerant from a system, either for servicing or decommissioning, it is recommended good practice that all refrigerants are removed safely.
- When transferring refrigerant into cylinders, ensure that only appropriate refrigerant recovery cylinders are employed. Ensure that the correct number of cylinders for holding the total system charge is available. All cylinders to be used are designated for the recovered refrigerant and labeled for that refrigerant (i.e., special cylinders for the recovery of refrigerant). Cylinders shall be complete with pressure-relief valve and associated shut-off valves in good working order. Empty recovery cylinders are evacuated and, if possible, cooled before recovery occurs.
- The recovery equipment shall be in good working order with a set of instructions concerning the equipment that is at hand and shall be suitable for the recovery of all appropriate refrigerants including, when applicable, flammable refrigerants.
  In addition, a set of calibrated weighing scales shall be available and in good working order. Hoses shall be complete with leak-free disconnect couplings and in good condition. Before using the recovery machine, check that it is in satisfactory working order, has been properly maintained and that any associated electrical components are sealed to prevent ignition in the event of a refrigerant release. Consult manufacturer if in doubt.
- The recovered refrigerant shall be returned to the refrigerant supplier in the correct recovery cylinder, and the relevant waste transfer note arranged. Do not mix refrigerants in recovery units and especially not in cylinders.
- If compressors or compressor oils are to be removed, ensure that they have been evacuated to an acceptable level to make certain that flammable refrigerant does not remain within the lubricant. The evacuation process shall be carried out prior to returning the compressor to the suppliers. Only electric heating to the compressor body shall be employed to accelerate this process. When oil is drained from a system, it shall be carried out safely.

*This statement applies to models utilizing R-290 refrigerant. See the nameplate for the refrigerant type in your model.

! DANGER Continué

Risque D'Incendie ou D'Explosion. Fluide Frigorigène Inflammable Utilisé.*

- Assurez-vous de suivre toutes les informations importantes de sécurité qui se trouvent au début du présent manuel et au début de la section «III.A. Précautions de sécurité lors de l'entretien.»
- L'entretien doit être effectué par du personnel formé et certifié pour la manipulation de réfrigérants inflammables afin de réduire au minimum le risque d'inflammation dû à un entretien inadéquat.
- Suivre attentivement les instructions de manutention conformément aux réglements nationaux.
- Mettre au rebut conformément aux conformément aux réglements fédéraux ou locaux.
- Ne pas perforer la conduite de fluide frigorigène. Risque d'incendie ou d'explosion en cas de perforation d'une canalisation de fluide frigorigène; suivez attentivement les instructions de manutention.
- Lors de l'élimination du réfrigérant d'un système, que ce soit pour l'entretien ou la mise hors service, il est recommandé de veiller à ce que tous les réfrigérants soient éliminés en toute sécurité.
- Lors du transfert de réfrigérant dans des bouteilles, veillez à ce que seules des bouteilles de récupération de réfrigérant appropriées soient utilisées. Assurez-vous que le nombre de bouteilles nécessaires pour contenir la charge totale du système est disponible. Toutes les bouteilles à utiliser sont désignées pour le réfrigérant récupéré et étiquetées pour ce réfrigérant (c'est-à-dire des bouteilles spéciales pour la récupération du réfrigérant). Les bouteilles doivent être équipées d'une soupape de surpression et de soupapes d'arrêt associées en bon état de fonctionnement. Les bouteilles de récupération vides sont évacuées et, si possible, refroidies avant la récupération.
- L'équipement de récupération doit être en bon état de fonctionnement, accompagné d'un ensemble d'instructions concernant l'équipement disponible et doit être adapté à la récupération de tous les réfrigérants appropriés, y compris, le cas échéant, les réfrigérants inflammables. En outre, un ensemble de balances étalonnées doit être disponible et en bon état de fonctionnement. Les tuyaux doivent être complets, équipés de raccords de déconnexion sans fuite et en bon état. Avant d'utiliser la machine de récupération, vérifiez qu'elle est en bon état de fonctionnement, qu'elle a été correctement entretenue et que tous les composants électriques associés sont scellés pour éviter toute inflammation en cas de fuite de réfrigérant. Consulter le fabricant en cas de doute.
- Le réfrigérant récupéré doit être renvoyé au fournisseur de réfrigérant dans la bouteille de récupération appropriée et le bon de transfert de déchets correspondant doit être établi. Ne mélangez pas les réfrigérants dans les unités de récupération et surtout pas dans les bouteilles.

* Cette déclaration s'applique aux modèles utilisant le réfrigérant R-290. Consultez la plaque signalétique pour connaître le type de réfrigérant utilisé sur votre modèle.

! DANGER Continué

- Si les compresseurs ou les huiles de compresseur doivent être retirés, assurez-vous qu'ils ont été évacués à un niveau acceptable afin de s'assurer qu'il ne reste pas de réfrigérant inflammable dans le lubrifiant. Le processus d'évacuation doit être effectué avant que le compresseur ne soit renvoyé aux fournisseurs. Seul le chauffage électrique du boîtier du compresseur doit être utilisé pour accélérer ce processus. Lorsque l'huile est vidangée d'un système, cette opération doit être effectuée en toute sécurité.

The appliance contains refrigerant and must be disposed of in accordance with applicable national, state, and local codes and regulations. Refrigerant must be recovered and safely disposed of by properly trained service personnel.

Before carrying out this procedure, it is essential that the technician is completely familiar with the equipment and all its detail. It is recommended good practice that all refrigerants are recovered safely. Prior to the task being carried out, an oil and refrigerant sample shall be taken in case analysis is required prior to re-use of recovered refrigerant. It is essential that electrical power is available before the task is commenced.

- Become familiar with the equipment and its operation.
- Isolate the system electrically.
- **Before attempting the procedure, ensure that:**
  - mechanical handling equipment is available, if required, for handling refrigerant cylinders
  - all personal protective equipment is available and being used correctly
  - the recovery process is supervised at all times by a competent person
  - recovery equipment and cylinders conform to the appropriate standards
- Pump down refrigerant system, if possible.
- If a vacuum is not possible, make a manifold so that refrigerant can be removed from various parts of the system.
- Make sure that cylinder is situated on the scales before recovery takes place.
- Start the recovery machine and operate in accordance with instructions.
- Do not overfill cylinders (no more than 80% volume liquid charge).
- Do not exceed the maximum working pressure of the cylinder, even temporarily.
- When the cylinders have been filled correctly and the process completed, make sure that the cylinders and the equipment are removed from site promptly and all isolation valves on the equipment are closed off.
- Recovered refrigerant shall not be charged into another refrigerating system unless it has been cleaned and checked.

Follow the steps below for decommissioning and disposal:

1. Recovery

1) Recover the refrigerant, and safely dispose of the refrigerant.
2) Evacuate the appliance.
3) Purge the refrigeration system with nitrogen.
4) Cut out the compressor and drain and dispose of the compressor oil. Compressor oils are to be removed, ensure that they have been evacuated to an acceptable level to make certain that flammable refrigerant does not remain within the lubricant. Dispose of compressor and compressor oil in compliance with national, state, and local codes and regulations.
5) Purge the refrigeration system with nitrogen.

2. Labeling

Equipment shall be labeled stating that it has been de-commissioned and emptied of refrigerant. The label shall be dated and signed. For appliances containing flammable refrigerant, ensure that there are labels on the equipment stating the equipment contains flammable refrigerant.

VII. Technical Information

A. Specification and Performance Data

1. F-422MAK

Specification Sheet

AC SUPPLY VOLTAGE (V/Hz/PH)	~115-120/60/1	
AMPERAGE (A)	8.8	
MINIMUM CIRCUIT AMPACITY (A)	15	
MAXIMUM FUSE SIZE (A)	15	
ELECTRIC & WATER CONSUMPTION (Wtr/Air)(°C/°F)	32/21 (90/70)	21/10 (70/50)
ELECTRIC W (kWH/100 lbs.)	760 (4.9)	445 (3.23)
WATER gal./24HR (gal./100 lbs.)	45.7 (12)	40 (12.0)
SHAPE OF ICE	Flake	
ICE HARDNESS	Approx. 80%, Ice (32/21 (90/70))	
HARVEST RATE (lbs/day)	<=1200	
APPROXIMATE STORAGE CAPACITY (lbs/kg)	NA	
ICE MAKING SYSTEM	Auger Type	
HARVESTING CONTROL SYSTEM	Direct Drive Auger	
ICE MAKING WATER CONTROL	Float Switch	
BIN CONTROL SYSTEM	Ultrasonic Sensor	
REFRIGERANT CHARGE (g/oz.)	R290 115 (4.1)	
FOAM BLOWING AGENT	HFO 1233zd (E)	
DESIGN PRESSURE kPa (PSI)	HI-2730 (396) LO-1310 (190)	

Performance Data Sheet

APPROXIMATE ICE PRODUCTION PER 24 HR.	AMBIENT TEMP. (°F/°C)	WATER TEMP. (°F/°C) 50/10		70/21		90/32	
	70/21	**485**	220	454	206	472	214
	80/27	461	209	414	188	432	196
	90/32	454	206	**380**	173	380	173
lbs./day (kg./day)	100/38	455	206	357	162	**343**	155
APPROXIMATE ELECTRIC CONSUMPTION	70/21	**750**		753		777	
	80/27	752		757		792	
	90/32	753		**760**		791	
watts	100/38	765		767		**820**	
APPROXIMATE WATER CONSUMPTION PER 24 HR.	70/21	**58**	0.22	54	0.21	52	0.20
	80/27	55	0.21	50	0.19	48	0.18
	90/32	54	0.21	**46**	0.17	43	0.16
gal./day (m^3/day)	100/38	50	0.19	45	0.17	**41**	0.16
EVAPORATOR OUTLET TEMP. °F (°C)	70/21	0	-18	5	-15	2	-16
	80/27	5	-15	5	-15	4	-16
	90/32	5	-15	5	-15	5	-15
	100/38	4	-16	5	-15	6	-15
HEAD PRESSURE	70/21	**180**	12.7	196	13.8	213	15.0
	80/27	192	13.5	217	15.3	232	16.3
	90/32	196	13.8	**235**	16.5	251	17.7
PSIG (kg/cm^2G)	100/38	198	13.9	239	16.8	**266**	18.7
SUCTION PRESSURE	70/21	**21**	1.5	22	1.5	22	1.6
	80/27	21	1.5	22	1.6	23	1.6
	90/32	22	1.5	**23**	1.6	24	1.7
PSIG (kg/cm^2G)	100/38	22	1.5	23	1.6	**24**	1.7
TOTAL HEAT OF REJECTION FROM CONDENSER		3,900 BTU/h [AT 90ºF (32ºC) / WT 70ºF (21ºC)]					
TOTAL HEAT OF REJECTION FROM COMPRESSOR		800 BTU/h [AT 90ºF (32ºC) / WT 70ºF (21ºC)]					

2. F-422MAK-C

Specification Sheet

AC SUPPLY VOLTAGE (V/Hz/PH)	~115-120/60/1	
AMPERAGE (A)	8.8	
MINIMUM CIRCUIT AMPACITY (A)	15	
MAXIMUM FUSE SIZE (A)	15	
ELECTRIC & WATER CONSUMPTION (Wtr/Air)(°C/°F)	32/21 (90/70)	21/10 (70/50)
ELECTRIC W (kWH/100 lbs.)	750 (5.3)	790 (3.96)
WATER gal./24HR (gal./100 lbs.)	43.2 (12)	57.2 (12.0)
SHAPE OF ICE	Flake	
ICE HARDNESS	Approx. 80%, Ice (32/21 (90/70))	
HARVEST RATE (lbs/day)	<=1200	
APPROXIMATE STORAGE CAPACITY (lbs/kg)	NA	
ICE MAKING SYSTEM	Auger Type	
HARVESTING CONTROL SYSTEM	Direct Drive Auger	
ICE MAKING WATER CONTROL	Float Switch	
BIN CONTROL SYSTEM	Ultrasonic Sensor	
REFRIGERANT CHARGE (g/oz.)	R290 115 (4.1)	
FOAM BLOWING AGENT	HFO 1233zd (E)	
DESIGN PRESSURE kPa (PSI)	HI-2730 (396) LO-1310 (190)	

Performance Data Sheet

APPROXIMATE ICE PRODUCTION PER 24 HR.	AMBIENT TEMP. (°F/°C)	WATER TEMP. (°F/°C) 50/10		70/21		90/32	
	70/21	**476**	216	442	201	465	211
	80/27	450	204	397	180	428	194
	90/32	442	201	**360**	163	379	172
lbs./day (kg./day)	100/38	448	203	356	162	**341**	155
APPROXIMATE ELECTRIC CONSUMPTION	70/21	**790**		778		817	
	80/27	781		763		832	
	90/32	778		**750**		807	
watts	100/38	805		763		**860**	
APPROXIMATE WATER CONSUMPTION PER 24 HR.	70/21	**57**	0.22	53	0.20	51	0.19
	80/27	54	0.20	48	0.18	47	0.18
	90/32	53	0.20	**43**	0.16	42	0.16
gal./day (m^3/day)	100/38	48	0.18	43	0.16	**41**	0.16
EVAPORATOR OUTLET TEMP. °F (°C)	70/21	4	-16	8	-13	7	-14
	80/27	8	-13	10	-12	8	-13
	90/32	8	-13	7	-14	9	-13
	100/38	6	-15	7	-14	11	-12
HEAD PRESSURE	70/21	**176**	12.4	192	13.5	210	14.8
	80/27	188	13.2	213	15.0	229	16.1
	90/32	192	13.5	**230**	16.2	248	17.4
PSIG (kg/cm^2G)	100/38	194	13.7	234	16.5	**264**	18.6
SUCTION PRESSURE	70/21	**21**	1.5	22	1.5	22	1.6
	80/27	21	1.5	22	1.6	23	1.6
	90/32	22	1.5	**23**	1.6	24	1.7
PSIG (kg/cm^2G)	100/38	22	1.5	23	1.6	**24**	1.7
TOTAL HEAT OF REJECTION FROM CONDENSER		4,000 BTU/h [AT 90ºF (32ºC) / WT 70ºF (21ºC)]					
TOTAL HEAT OF REJECTION FROM COMPRESSOR		800 BTU/h [AT 90ºF (32ºC) / WT 70ºF (21ºC)]					

3. F-622MAK-C

Specification Sheet

AC SUPPLY VOLTAGE (V/Hz/PH)	~115-120/60/1	
AMPERAGE (A)	8.9	
MINIMUM CIRCUIT AMPACITY (A)	20	
MAXIMUM FUSE SIZE (A)	20	
ELECTRIC & WATER CONSUMPTION (Wtr/Air)(°C/°F)	32/21 (90/70)	21/10 (70/50)
ELECTRIC W (kWH/100 lbs.)	920 (4.55)	890 (3.35)
WATER gal./24HR (gal./100 lbs.)	60 (12)	76.8 (12.0)
SHAPE OF ICE	Flake	
ICE HARDNESS	Approx. 80%, Ice (32/21 (90/70))	
HARVEST RATE (lbs/day)	<=1200	
APPROXIMATE STORAGE CAPACITY (lbs/kg)	NA	
ICE MAKING SYSTEM	Auger Type	
HARVESTING CONTROL SYSTEM	Direct Drive Auger	
ICE MAKING WATER CONTROL	Float Switch	
BIN CONTROL SYSTEM	Ultrasonic Sensor	
REFRIGERANT CHARGE (g/oz.)	R290 115 (4.1)	
FOAM BLOWING AGENT	HFO 1233zd (E)	
DESIGN PRESSURE kPa (PSI)	HI-2730 (396) LO-1310 (190)	

Performance Data Sheet

APPROXIMATE ICE PRODUCTION PER 24 HR.	AMBIENT TEMP. (°F/°C)	WATER TEMP. (°F/°C) 50/10		70/21		90/32	
	70/21	**640**	290	599	272	621	282
	80/27	609	276	545	247	564	256
	90/32	599	272	**500**	227	488	221
lbs./day (kg./day)	100/38	597	271	454	206	**433**	196
APPROXIMATE ELECTRIC CONSUMPTION	70/21	**890**		899		921	
	80/27	897		910		938	
	90/32	899		**920**		946	
watts	100/38	907		926		**970**	
APPROXIMATE WATER CONSUMPTION PER 24 HR.	70/21	**77**	0.29	72	0.27	67	0.25
	80/27	73	0.28	65	0.25	62	0.23
	90/32	72	0.27	**60**	0.23	56	0.21
gal./day (m^3/day)	100/38	65	0.25	59	0.22	**52**	0.20
EVAPORATOR OUTLET TEMP. °F (°C)	70/21	19	-7	19	-7	21	-6
	80/27	19	-7	19	-7	22	-6
	90/32	19	-7	19	-7	21	-6
	100/38	20	-7	19	-7	23	-5
HEAD PRESSURE	70/21	**173**	12.2	188	13.2	209	14.7
	80/27	185	13.0	208	14.6	229	16.1
	90/32	188	13.2	**225**	15.8	246	17.3
PSIG (kg/cm^2G)	100/38	192	13.5	230	16.2	**266**	18.7
SUCTION PRESSURE	70/21	**30**	2.1	31	2.2	32	2.2
	80/27	31	2.2	32	2.3	32	2.3
	90/32	31	2.2	**33**	2.3	34	2.4
PSIG (kg/cm^2G)	100/38	31	2.2	33	2.3	**34**	2.4
TOTAL HEAT OF REJECTION FROM CONDENSER		5,100 BTU/h [AT 90ºF (32ºC) / WT 70ºF (21ºC)]					
TOTAL HEAT OF REJECTION FROM COMPRESSOR		900 BTU/h [AT 90ºF (32ºC) / WT 70ºF (21ºC)]					

DATA PENDING

DATA PENDING

6. F-822MAK

Specification Sheet

AC SUPPLY VOLTAGE (V/Hz/PH)	~115-120/60/1	
AMPERAGE (A)	9.7	
MINIMUM CIRCUIT AMPACITY (A)	20	
MAXIMUM FUSE SIZE (A)	20	
ELECTRIC & WATER CONSUMPTION (Wtr/Air)(°C/°F)	32/21 (90/70)	21/10 (70/50)
ELECTRIC W (kWH/100 lbs.)	890 (3.95)	920 (2.94)
WATER gal./24HR (gal./100 lbs.)	67.3 (12)	90 (12.0)
SHAPE OF ICE	Flake	
ICE HARDNESS	Approx. 70%, Ice (32/21 (90/70))	
HARVEST RATE (lbs/day)	<=1200	
APPROXIMATE STORAGE CAPACITY (lbs/kg)	NA	
ICE MAKING SYSTEM	Auger Type	
HARVESTING CONTROL SYSTEM	Direct Drive Auger	
ICE MAKING WATER CONTROL	Float Switch	
BIN CONTROL SYSTEM	Ultrasonic Sensor	
REFRIGERANT CHARGE (g/oz.)	R290 150 (5.3)	
FOAM BLOWING AGENT	HFO 1233zd (E)	
DESIGN PRESSURE kPa (PSI)	HI-2730 (396) LO-1310 (190)	

Performance Data Sheet

APPROXIMATE ICE PRODUCTION PER 24 HR.	AMBIENT TEMP. (°F/°C)	WATER TEMP. (°F/°C) 50/10		70/21		90/32	
	70/21	**750**	340	695	315	692	314
	80/27	708	321	621	282	626	284
	90/32	695	315	**560**	254	540	245
lbs./day (kg./day)	100/38	693	314	501	227	**477**	216
APPROXIMATE ELECTRIC CONSUMPTION	70/21	**920**		911		928	
	80/27	913		900		932	
	90/32	911		**890**		916	
watts	100/38	924		896		**940**	
APPROXIMATE WATER CONSUMPTION PER 24 HR.	70/21	**90**	0.34	83	0.32	77	0.29
	80/27	85	0.32	75	0.28	70	0.27
	90/32	83	0.32	**67**	0.25	62	0.23
gal./day (m^3/day)	100/38	75	0.28	66	0.25	**57**	0.22
EVAPORATOR OUTLET TEMP. °F (°C)	70/21	18	-8	18	-8	19	-7
	80/27	18	-8	19	-7	20	-7
	90/32	18	-8	19	-7	20	-6
	100/38	18	-8	19	-7	21	-6
HEAD PRESSURE	70/21	**138**	9.7	151	10.6	161	11.3
	80/27	148	10.4	168	11.8	173	12.2
	90/32	151	10.6	**182**	12.8	189	13.3
PSIG (kg/cm^2G)	100/38	150	10.6	184	12.9	**196**	13.8
SUCTION PRESSURE	70/21	**30**	2.1	31	2.2	31	2.2
	80/27	30	2.1	31	2.2	32	2.2
	90/32	31	2.2	**32**	2.2	33	2.3
PSIG (kg/cm^2G)	100/38	31	2.2	32	2.3	**33**	2.3
TOTAL HEAT OF REJECTION FROM CONDENSER		5,600 BTU/h [AT 90ºF (32ºC) / WT 70ºF (21ºC)]					
TOTAL HEAT OF REJECTION FROM COMPRESSOR		800 BTU/h [AT 90ºF (32ºC) / WT 70ºF (21ºC)]					

7. F-822MAK-C

Specification Sheet

AC SUPPLY VOLTAGE (V/Hz/PH)	~115-120/60/1	
AMPERAGE (A)	9.7	
MINIMUM CIRCUIT AMPACITY (A)	20	
MAXIMUM FUSE SIZE (A)	20	
ELECTRIC & WATER CONSUMPTION (Wtr/Air)(°C/°F)	32/21 (90/70)	21/10 (70/50)
ELECTRIC W (kWH/100 lbs.)	940 (4.45)	920 (3.39)
WATER gal./24HR (gal./100 lbs.)	63 (12)	78.4 (12.0)
SHAPE OF ICE	Cubelet	
ICE HARDNESS	Approx. 80%, Ice (32/21 (90/70))	
HARVEST RATE (lbs/day)	<=1200	
APPROXIMATE STORAGE CAPACITY (lbs/kg)	NA	
ICE MAKING SYSTEM	Auger Type	
HARVESTING CONTROL SYSTEM	Direct Drive Auger	
ICE MAKING WATER CONTROL	Float Switch	
BIN CONTROL SYSTEM	Ultrasonic Sensor	
REFRIGERANT CHARGE (g/oz.)	R290 150 (5.3)	
FOAM BLOWING AGENT	HFO 1233zd (E)	
DESIGN PRESSURE kPa (PSI)	HI-2730 (396) LO-1310 (190)	

Performance Data Sheet

APPROXIMATE ICE PRODUCTION PER 24 HR.	AMBIENT TEMP. (°F/°C)	WATER TEMP. (°F/°C) 50/10		70/21		90/32	
	70/21	**653**	296	616	279	635	288
	80/27	625	283	566	257	580	263
	90/32	616	279	**525**	238	505	229
lbs./day (kg./day)	100/38	611	277	472	214	**450**	204
APPROXIMATE ELECTRIC CONSUMPTION	70/21	**920**		926		943	
	80/27	924		934		956	
	90/32	926		**940**		961	
watts	100/38	933		945		**980**	
APPROXIMATE WATER CONSUMPTION PER 24 HR.	70/21	**78**	0.30	74	0.28	69	0.26
	80/27	75	0.28	68	0.26	64	0.24
	90/32	74	0.28	**63**	0.24	58	0.22
gal./day (m^3/day)	100/38	68	0.26	62	0.23	**54**	0.20
EVAPORATOR OUTLET TEMP. °F (°C)	70/21	18	-8	17	-8	18	-8
	80/27	17	-8	16	-9	19	-7
	90/32	17	-8	16	-9	18	-8
	100/38	18	-8	16	-9	19	-7
HEAD PRESSURE	70/21	**140**	9.8	152	10.7	166	11.7
	80/27	149	10.5	168	11.8	180	12.7
	90/32	152	10.7	**181**	12.7	195	13.7
PSIG (kg/cm^2G)	100/38	154	10.8	184	12.9	**207**	14.6
SUCTION PRESSURE	70/21	**30**	2.1	31	2.2	31	2.2
	80/27	30	2.1	31	2.2	32	2.2
	90/32	31	2.2	**32**	2.2	33	2.3
PSIG (kg/cm^2G)	100/38	31	2.2	32	2.3	**33**	2.3
TOTAL HEAT OF REJECTION FROM CONDENSER				5,600 BTU/h [AT 90ºF (32ºC) / WT 70ºF (21ºC)]			
TOTAL HEAT OF REJECTION FROM COMPRESSOR				800 BTU/h [AT 90ºF (32ºC) / WT 70ºF (21ºC)]			

DATA PENDING

DATA PENDING

DATA PENDING

DATA PENDING

DATA PENDING

DATA PENDING

DATA PENDING

DATA PENDING

DATA PENDING

DATA PENDING

DATA PENDING

DATA PENDING

B. Wiring Diagrams

1. F-422MAK(-C)

S2 DIP SWITCH SETTING	1	2	3	4	5	6	7	8	9	10
F-422MAK(-C)	OFF	OFF	OFF	OFF	OFF	OFF	ON	ON	OFF	OFF

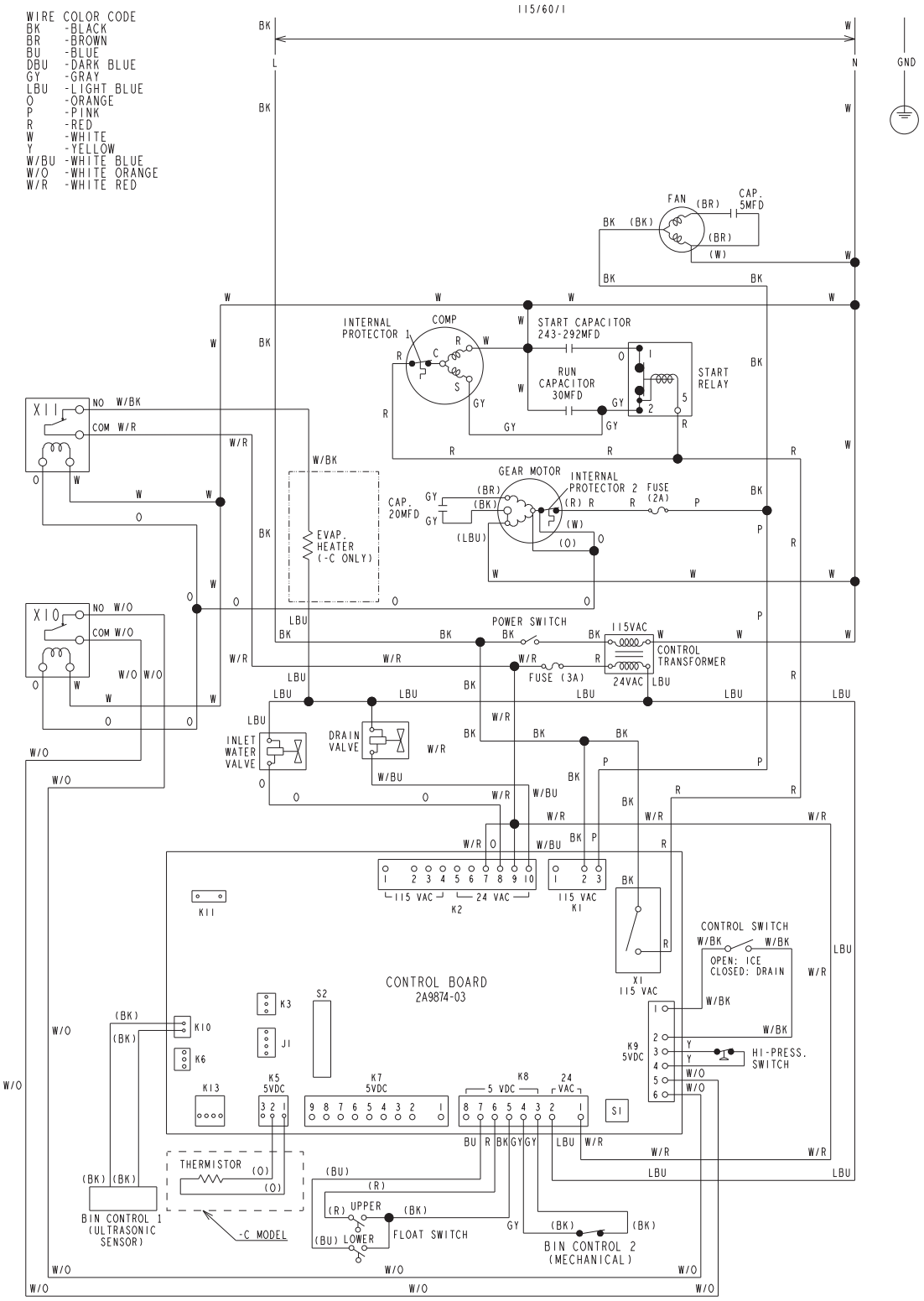

2. F-622M_K-C

S2 DIP SWITCH SETTING	1	2	3	4	5	6	7	8	9	10
F-622MAK-C	OFF	OFF	OFF	OFF	OFF	OFF	ON	ON	OFF	OFF

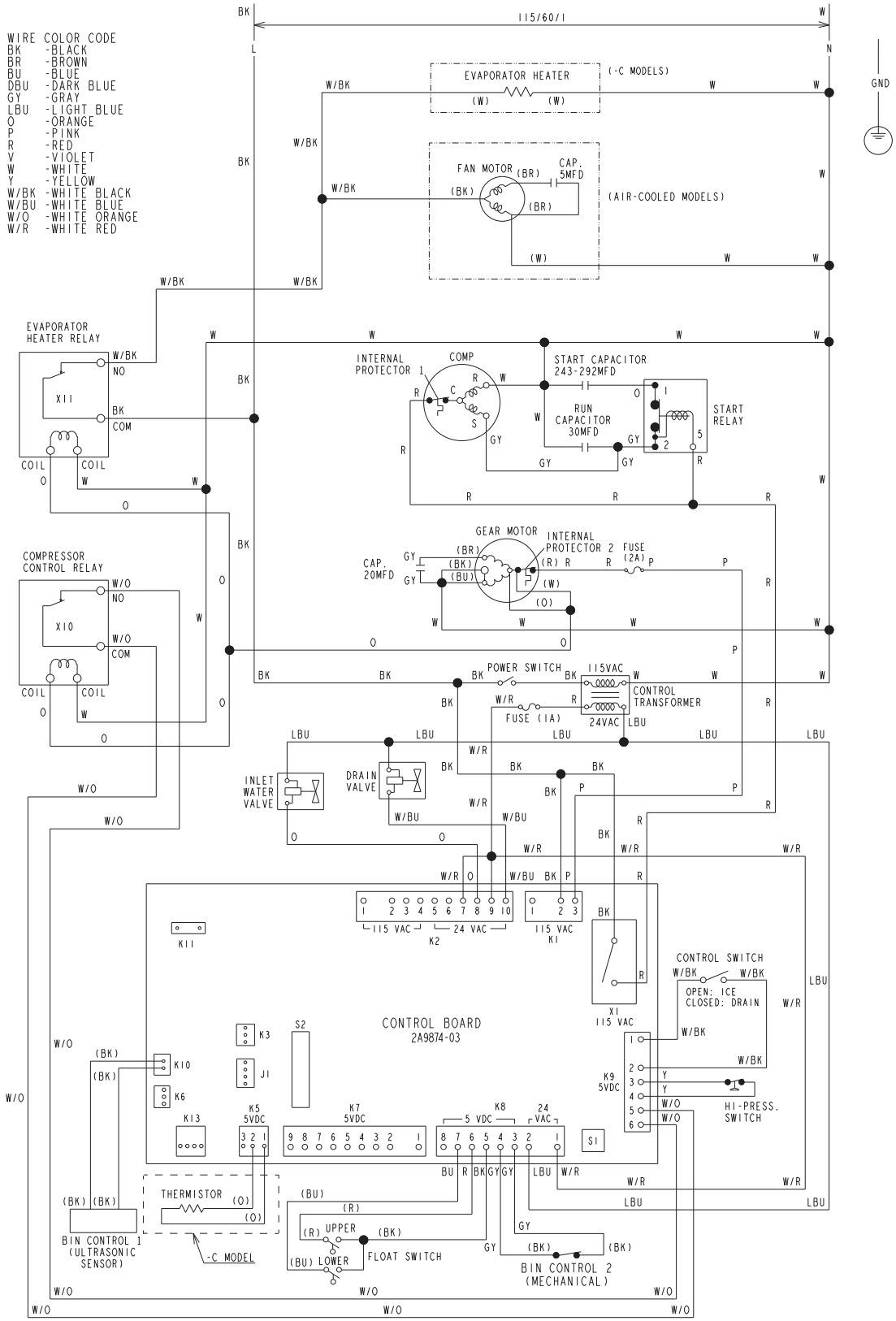

3. F-622MRKZ-C

S2 DIP SWITCH SETTING	1	2	3	4	5	6	7	8	9	10
F-622MRKZ-C	ON	OFF	OFF	OFF	OFF	OFF	ON	ON	OFF	OFF

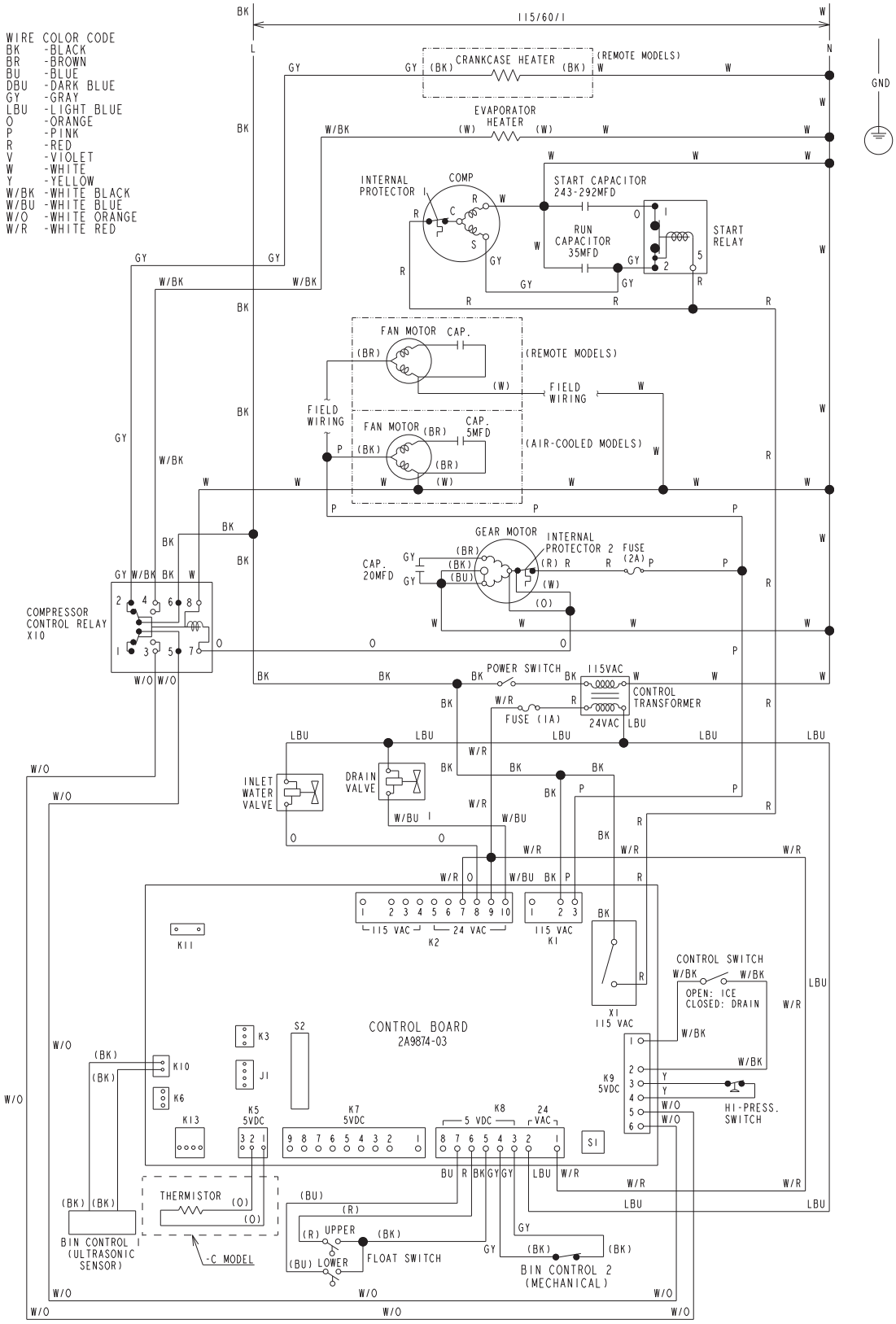

4. F-822M_K(-C)

S2 DIP SWITCH SETTING	1	2	3	4	5	6	7	8	9	10
F-822MAK(-C)	OFF	OFF	OFF	OFF	OFF	OFF	ON	ON	OFF	OFF

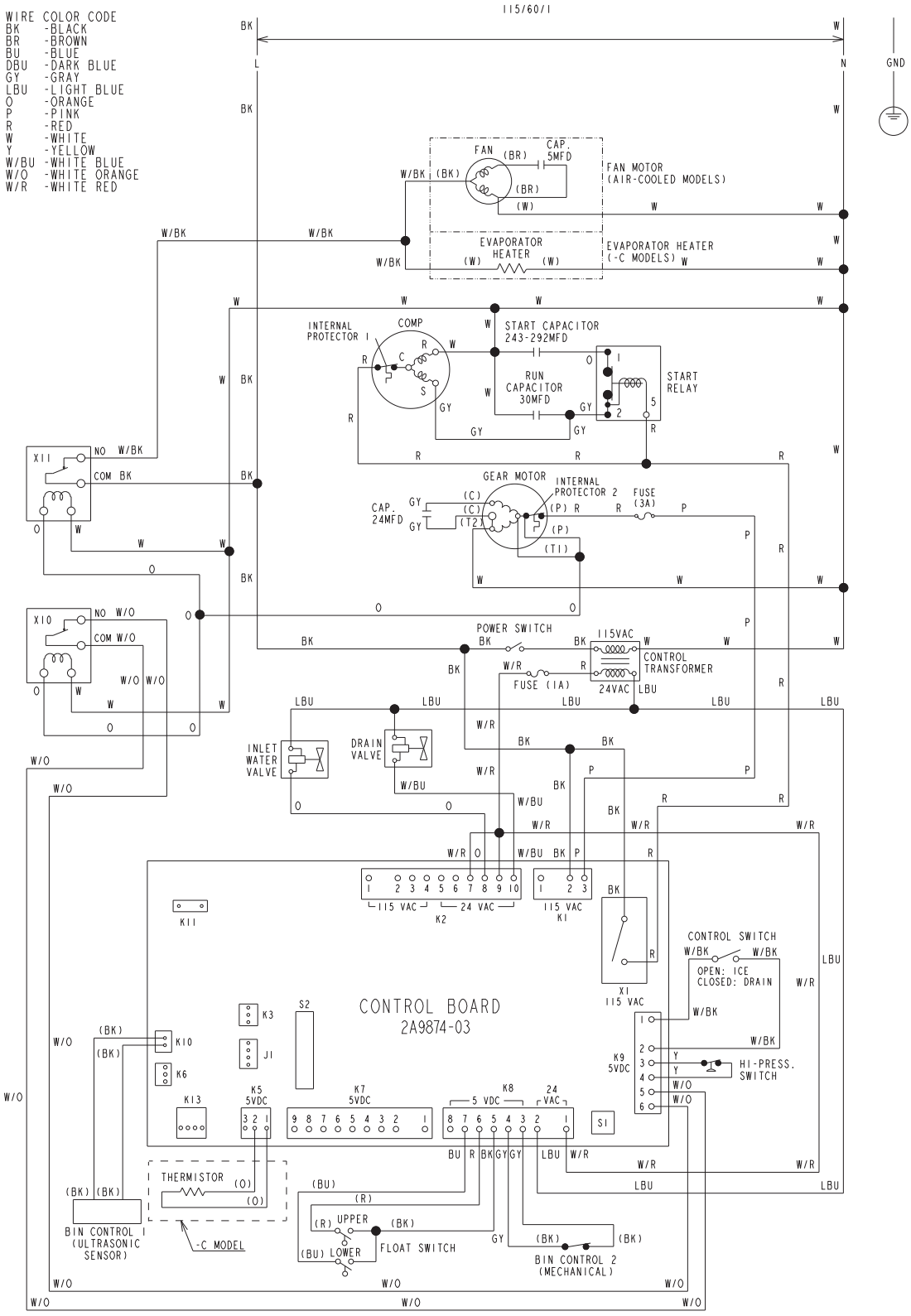

5. F-1022MAK-C(-SC)

S2 DIP SWITCH SETTING	1	2	3	4	5	6	7	8	9	10
F-1022MAK-C	OFF	OFF	OFF	OFF	OFF	OFF	ON	ON	OFF	OFF

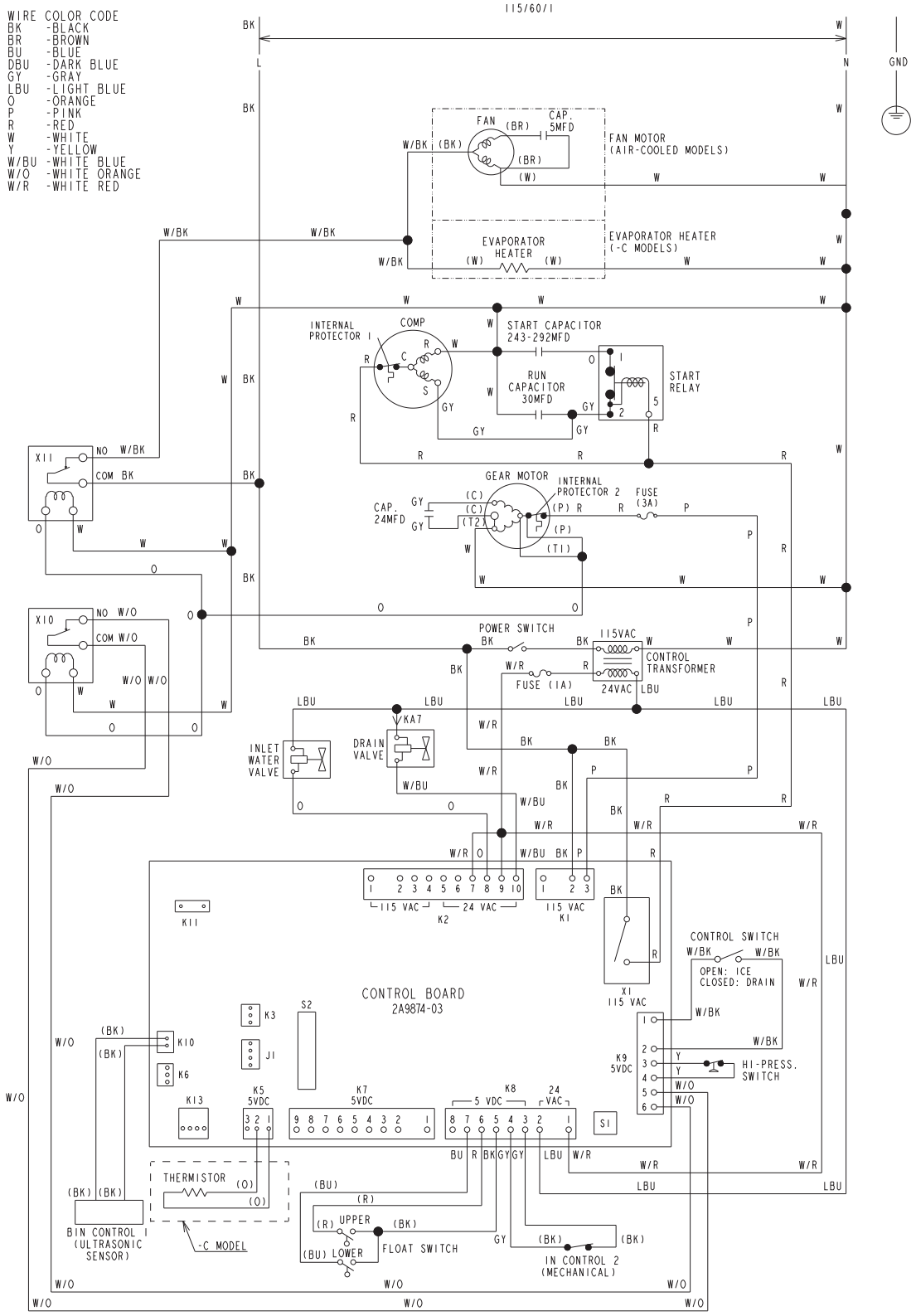

6. F-1022MRKZ(-C)(-SC)(-CB)

S2 DIP SWITCH SETTING	1	2	3	4	5	6	7	8	9	10
F-1022MRKZ(-C)(-SC)(-CB)	OFF	OFF	OFF	OFF	OFF	OFF	ON	ON	OFF	OFF

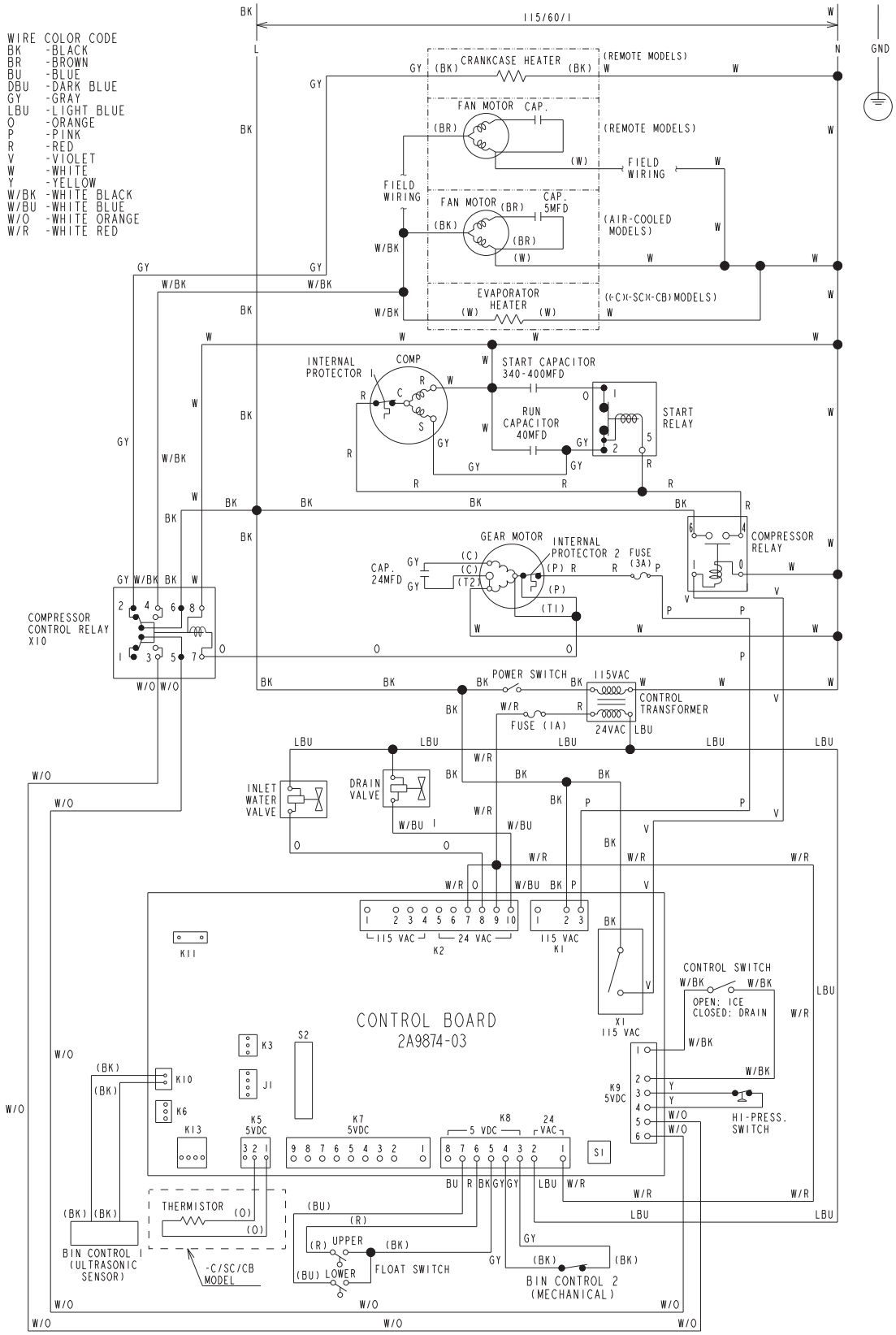

DATA PENDING