HOSHIZAKI

Service Manual

Self-Contained Crescent Cuber

Models
KM-80BAJ
KM-115BAJ
KM-160BAJ, BWJ

hoshizakiamerica.com

Number: F116-1007
Issued: 04-16-2018

⚠ WARNING

Only qualified service technicians should install and service the appliance. To obtain the name and phone number of your local Hoshizaki Certified Service Representative, visit www.hoshizaki.com. No service should be undertaken until the technician has thoroughly read this Service Manual. Failure to service and maintain the appliance in accordance with this manual will adversely affect safety, performance, component life, and warranty coverage and may result in costly water damage. Proper installation is the responsibility of the installer. Product failure or property damage due to improper installation is not covered under warranty.

Hoshizaki provides this manual primarily to assist qualified service technicians in the maintenance and service of the product.

Should the reader have any questions or concerns which have not been satisfactorily addressed, please call, send an e-mail message, or write to the Hoshizaki Technical Support Department for assistance.

Phone: 1-800-233-1940; (770) 487-2331
Fax: 1-800-843-1056; (770) 487-3360

E-mail: techsupport@hoshizaki.com

HOSHIZAKI AMERICA, INC.
618 Highway 74 South
Peachtree City, GA 30269
Attn: Hoshizaki Technical Support Department

Web Site: www.hoshizaki.com

NOTE: To expedite assistance, all correspondence/communication MUST include the following information:

- Model Number _____
- Serial Number _____
- Complete and detailed explanation of the problem.

IMPORTANT
This manual should be read carefully before the appliance is serviced. Read the warnings and guidelines contained in this manual carefully as they provide essential information for the continued safe use, service, and maintenance of the appliance. Retain this manual for any further reference that may be necessary.

CONTENTS

Important Safety Information 4
I. Construction and Water/Refrigeration Circuit Diagram 6
A. Construction 6
1. KM-80BAJ, KM-115BAJ 6
2. KM-160BAJ 7
3. KM-160BWJ 8
4. Icemaking Compartment 9
B. Water/Refrigeration Circuit Diagram 10
1. KM-80BAJ, KM-115BAJ 10
2. KM-160BAJ 11
3. KM-160BWJ 12
II. Sequence of Operation and Service Diagnosis 13
A. Sequence of Operation 13
1. Flow Chart 13
2. Timing Chart 14
3. Details 15
B. Service Diagnosis 17
C. Control Board Check 19
D. Bin Control Check and Cleaning 19
1. Bin Control Check 20
2. Bin Control Cleaning 21
E. Float Switch Check and Cleaning 23
1. Float Switch Check 23
2. Float Switch Cleaning 25
F. Thermistor Check 28
G. Diagnostic Tables 29
1. No Ice Production 29
2. Freeze-Up 32
3. Low Ice Production 33
4. Abnormal Ice 33
5. Other 34
III. Controls and Adjustments 35
A. Control Board Layout 36
B. LED Lights and Audible Alarm Safeties 37
C. Settings and Adjustments 38
1. Default Dip Switch Settings 38
2. Harvest Timer 38
3. Pump-Out Timer 39

4. Drain Frequency Control 39
5. Harvest Pump Timer 40
6. Freeze Timer 40
7. Pump-Out/Drain selector 40
8. Harvest Promotion Control 41
9. Refill Counter 41
10. Harvest Completion Detection Control 41
11. Overfreeze Detection Control 42
12. Anti-Slush Control 42
13. Control Board Replacement 43
D. Switches 43
IV. Refrigeration Circuit and Component Service Information 44
A. Refrigeration Circuit Service Information 44
1. Refrigerant Recovery 45
2. Brazing 45
3. Evacuation and Recharge (R-134a) 45
B. Component Service Information 46
C. Water Tank 47
D. Separator 49
E. Door 50
F. Adjustment of Water Regulating Valve (Water-Cooled Model) 51
V. Maintenance 52
A. Maintenance Schedule 52
VI. Preparing the Appliance for Periods of Non-Use 53
VII. Disposal 54
VIII. Technical Information 55
A. Specification Data 55
1. KM-80BAJ 55
2. KM-115BAJ 56
3. KM-160BAJ 57
4. KM-160BWJ 58
B. Performance Data 59
1. KM-80BAJ 59
2. KM-115BAJ 60
3. KM-160BAJ 61
4. KM-160BWJ 62
C. Wiring Diagram 63
1. KM-80BAJ 63
2. KM-115BAJ 64
3. KM-160BAJ, KM-160BWJ 65

Important Safety Information

Throughout this manual, notices appear to bring your attention to situations which could result in death, serious injury, damage to the appliance, or damage to property.

⚠ **WARNING**	**Indicates a hazardous situation which could result in death or serious injury.**
NOTICE	**Indicates a situation which could result in damage to the appliance or property.**
IMPORTANT	**Indicates important information about the installation, use, and care of the appliance.**

⚠ WARNING

The appliance should be destined only to the use for which it has been expressly conceived. Any other use should be considered improper and therefore dangerous. The manufacturer cannot be held responsible for injury or damage resulting from improper, incorrect, and unreasonable use. Failure to service and maintain the appliance in accordance with this manual will adversely affect safety, performance, component life, and warranty coverage and may result in costly water damage.

To reduce the risk of death, electric shock, serious injury, or fire, follow basic precautions including the following:

- Only qualified service technicians should install and service the appliance.
- The appliance must be installed in accordance with applicable national, state, and local codes and regulations.
- The appliance requires an independent power supply of proper capacity. See the nameplate for electrical specifications. Failure to use an independent power supply of proper capacity can result in a tripped breaker, blown fuse, damage to existing wiring, or component failure. This could lead to heat generation or fire.
- **THE APPLIANCE MUST BE GROUNDED:** The appliance is equipped with a NEMA 5-15 three-prong grounding plug to reduce the risk of potential shock hazards. It must be plugged into a properly grounded, independent 3-prong wall outlet. If the outlet is a 2-prong outlet, it is your personal responsibility to have a qualified electrician replace it with a properly grounded, independent 3-prong wall outlet. Do not remove the ground prong from the plug and do not use an adapter plug. Failure to properly ground the appliance could result in death or serious injury.
- Do not use an extension cord.
- To reduce the risk of electric shock, do not touch the control switch or plug with damp hands. Make sure the control switch is in the "OFF" position before plugging in or unplugging the appliance.
- Do not use an appliance with a damaged power cord. The power cord should not be altered, jerked, bundled, weighed down, pinched, or tangled. Such actions could result in electric shock or fire. To unplug the appliance, be sure to pull the plug, not the cord, and do not jerk the cord.
- Do not make any alterations to the appliance. Alterations could result in electric shock, injury, fire, or damage to the appliance.

⚠ WARNING, continued

- The appliance is not intended for use by persons (including children) with reduced physical, sensory, or mental capabilities, or lack of experience and knowledge, unless they have been given supervision or instruction concerning use of the appliance by a person responsible for their safety.
- Young children should be properly supervised around the appliance.
- Do not climb, stand, or hang on the appliance or appliance door or allow children or animals to do so. Serious injury could occur or the appliance could be damaged.
- Be careful not to pinch fingers when opening and closing the door. Be careful when opening and closing the door when children are in the area.
- Do not use combustible spray or place volatile or flammable substances near the appliance. They might catch fire.
- Keep the area around the appliance clean. Dirt, dust, or insects in the appliance could cause harm to individuals or damage to the appliance.

NOTICE

- Protect the floor when moving the appliance to prevent damage to the floor.
- Follow the water supply, drain connection, and maintenance instructions carefully to reduce the risk of costly water damage.
- In areas where water damage is a concern, install in a contained area with a floor drain.
- Install the appliance in a location that stays above freezing. Normal operating ambient temperature must be within 45°F to 100°F (7°C to 38°C).
- If water collects in the bin and will not drain, turn off the appliance and close the water supply line shut-off valve. Locate and resolve the issue.
- Do not leave the appliance on during extended periods of non-use, extended absences, or in sub-freezing temperatures. To properly prepare the appliance for these occasions, follow the instructions in "VI. Preparing the Appliance for Periods of Non-Use."
- Keep ventilation openings, in the appliance enclosure or in the built-in structure, clear of obstruction.
- Do not place more than 33 lb. (15 kg) on the top panel.
- The storage bin is for ice use only. Do not store anything else in the storage bin.

I. Construction and Water/Refrigeration Circuit Diagram

A. Construction

1. KM-80BAJ, KM-115BAJ

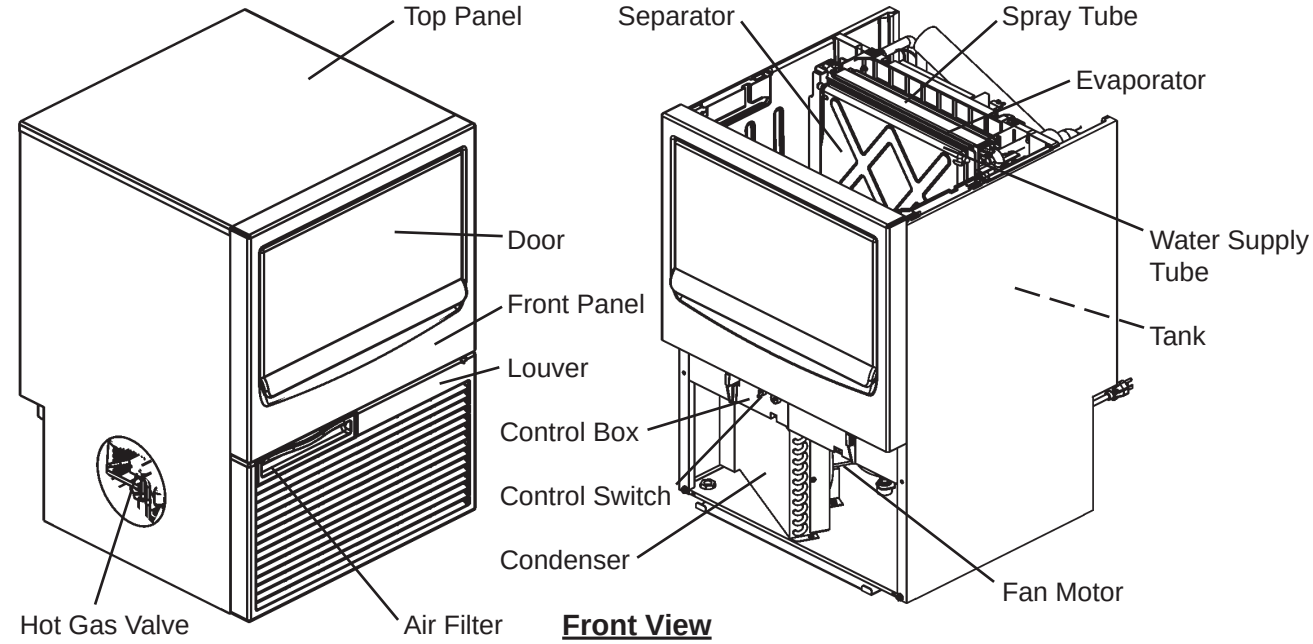

Front View

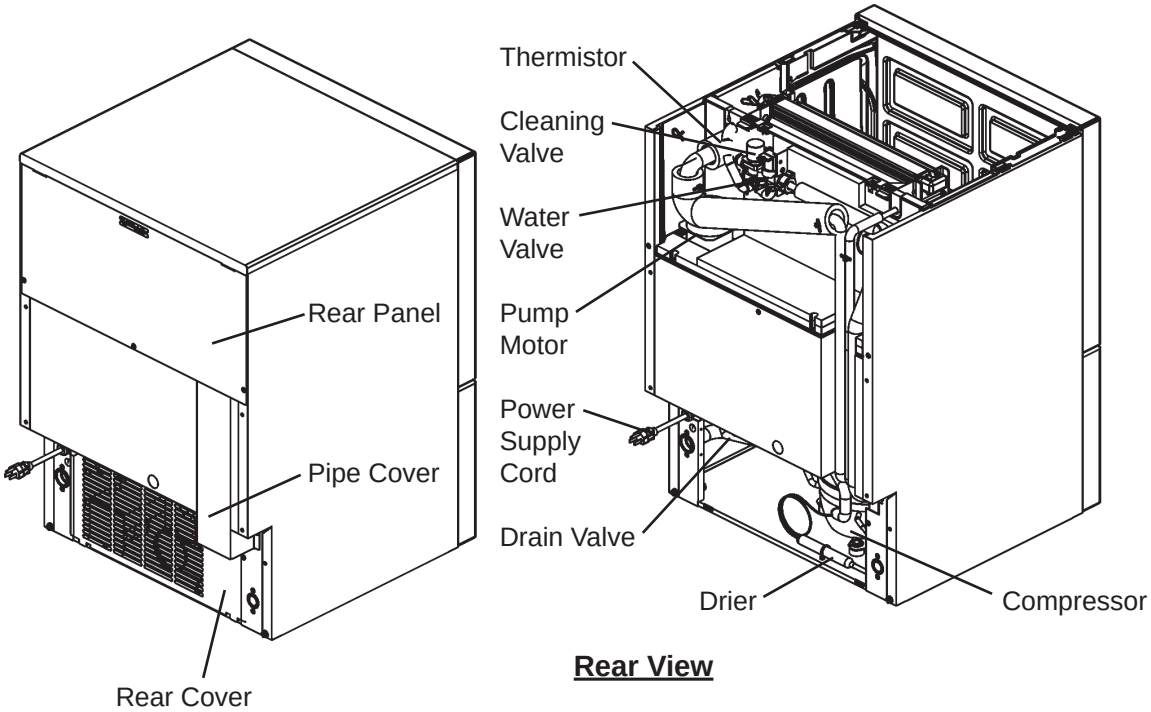

Rear View

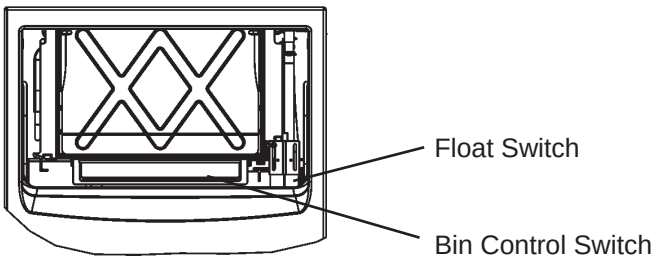

With Tank Removed

2. KM-160BAJ

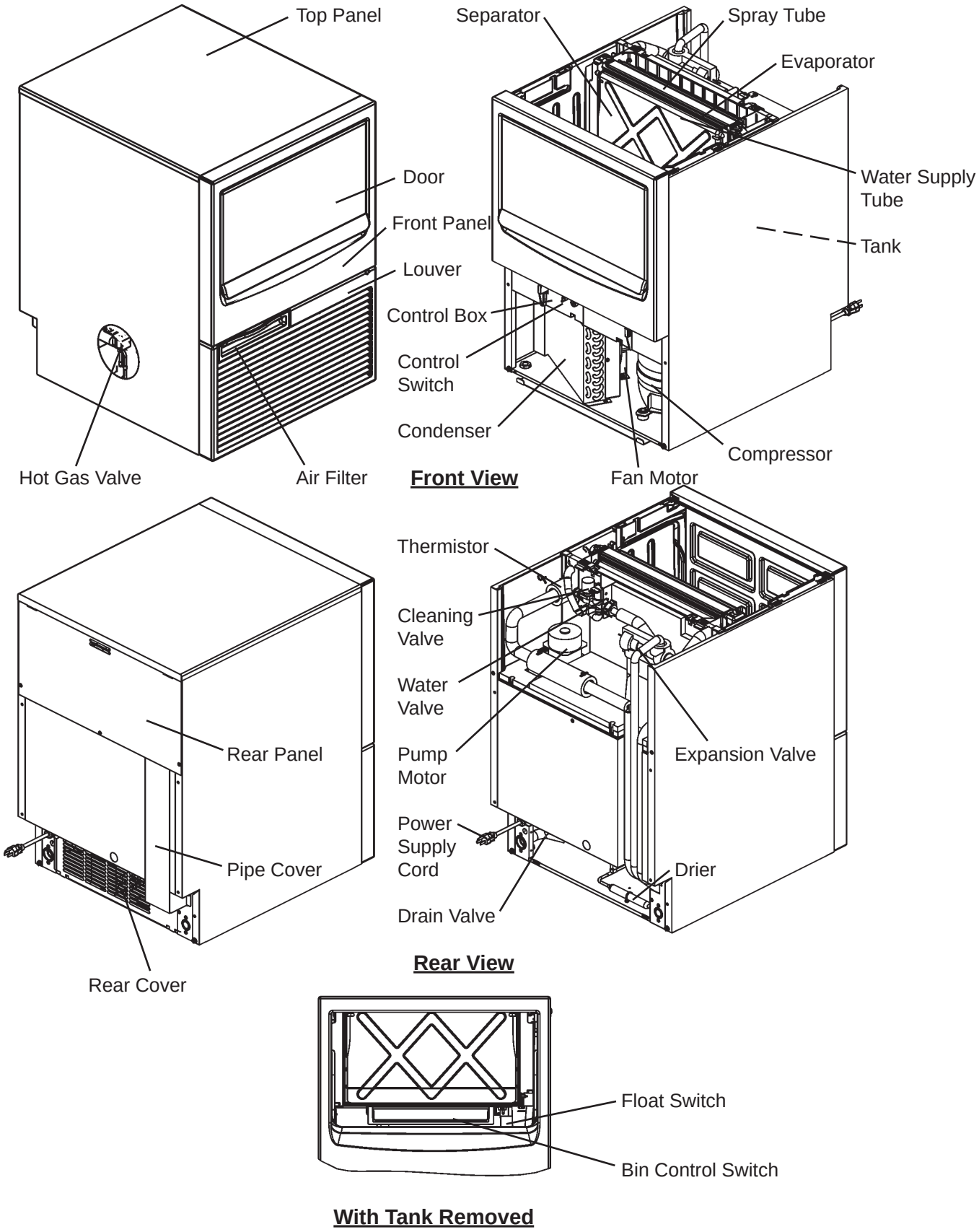
Top Panel
Separator
Spray Tube
Evaporator
Door
Water Supply Tube
Front Panel
Tank
Louver
Control Box
Control Switch
Condenser
Compressor
Hot Gas Valve
Air Filter
Front View
Fan Motor
Thermistor
Cleaning Valve
Water Valve
Rear Panel
Pump Motor
Expansion Valve
Power Supply Cord
Pipe Cover
Drier
Drain Valve
Rear View
Rear Cover
Float Switch
Bin Control Switch
With Tank Removed

3. KM-160BWJ

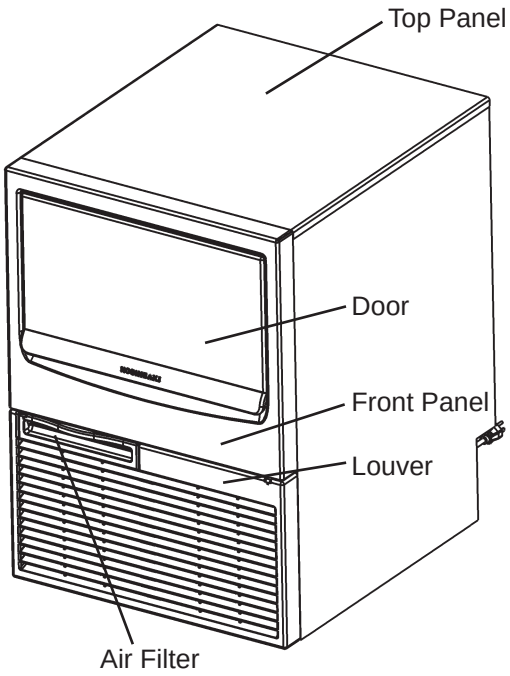

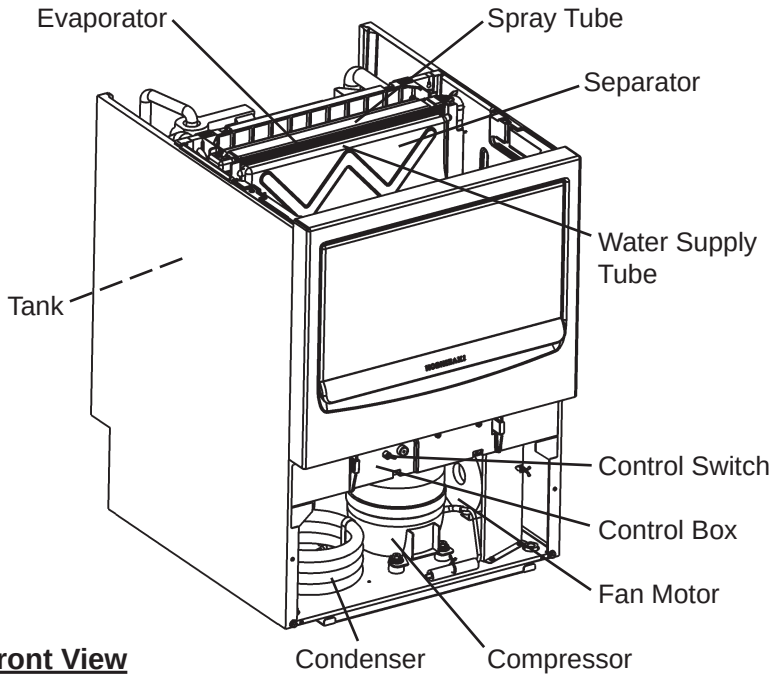

Front View

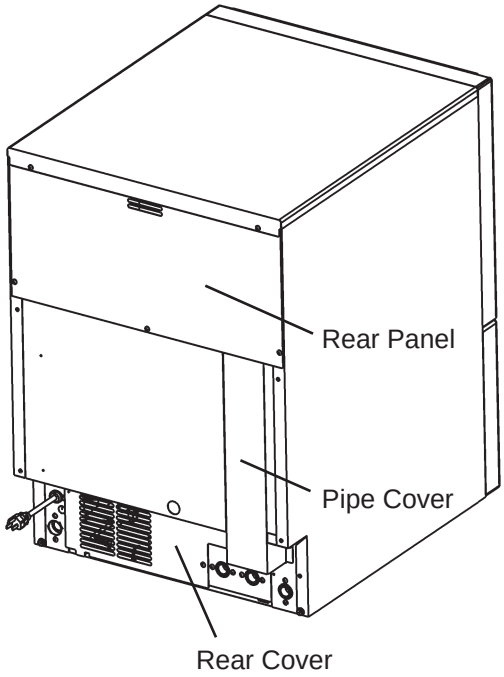

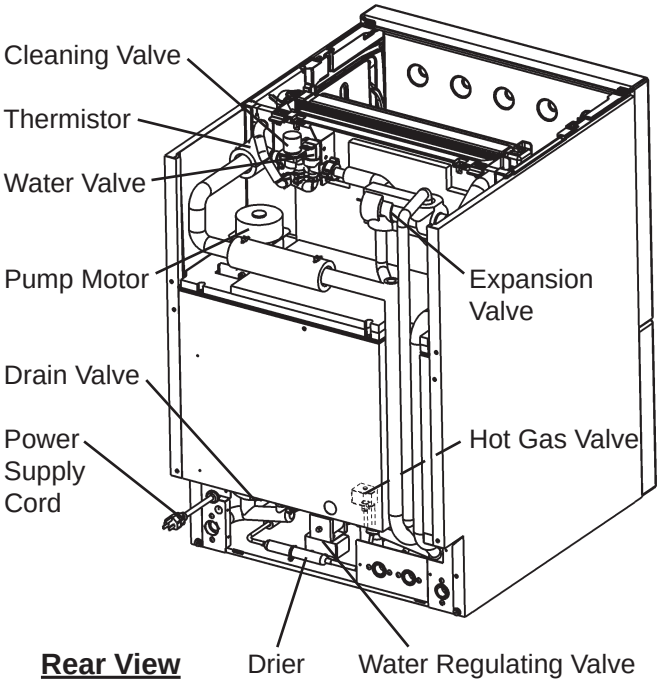

Rear View

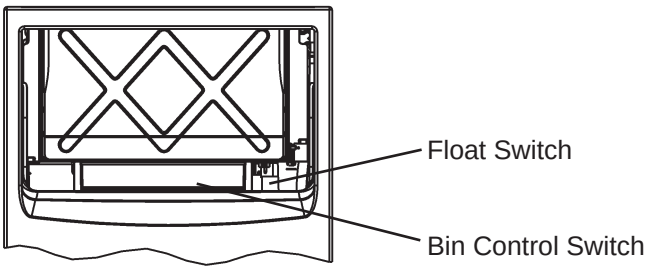

With Tank Removed

4. Icemaking Compartment

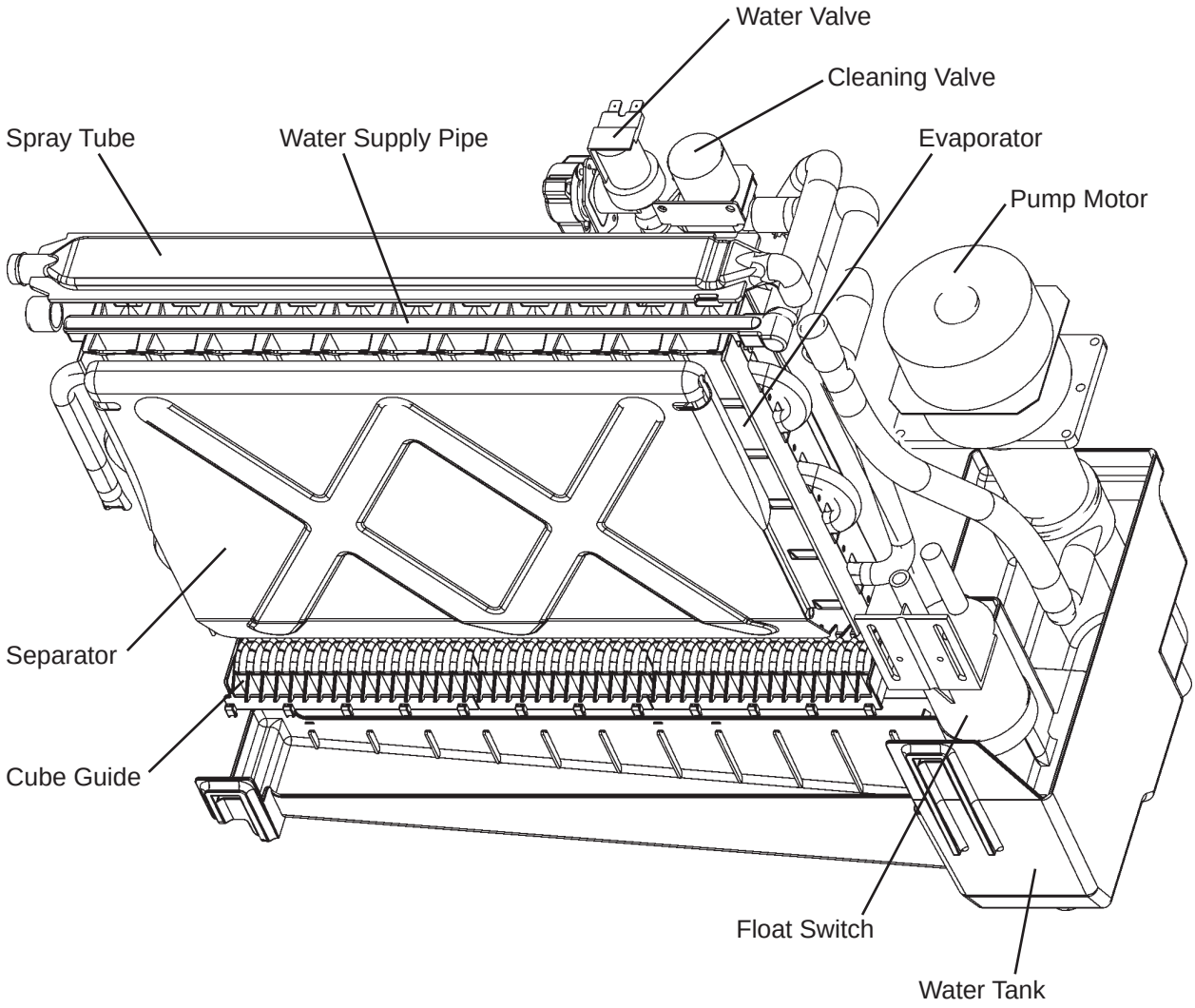

B. Water/Refrigeration Circuit Diagram

1. KM-80BAJ, KM-115BAJ

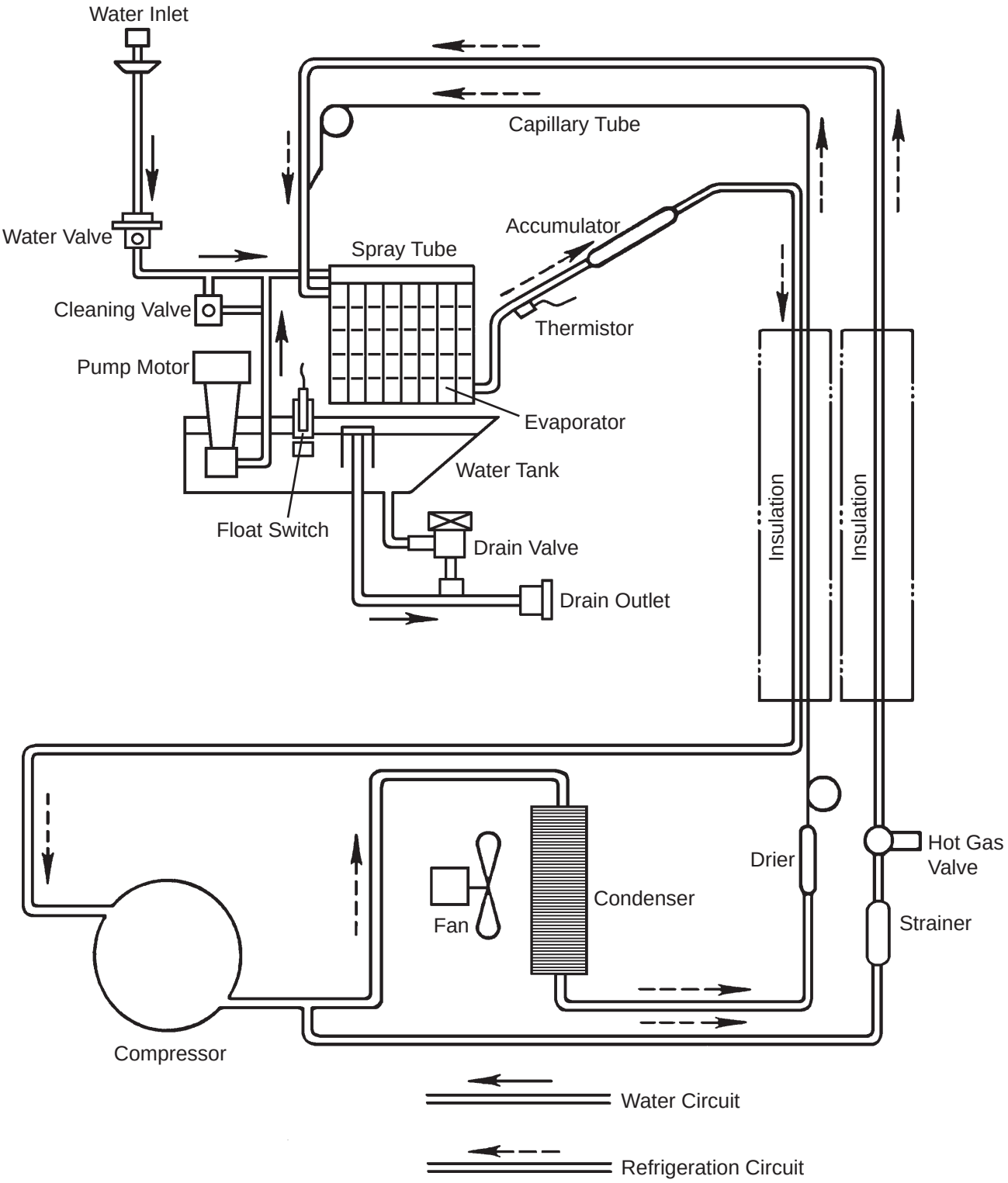

2. KM-160BAJ

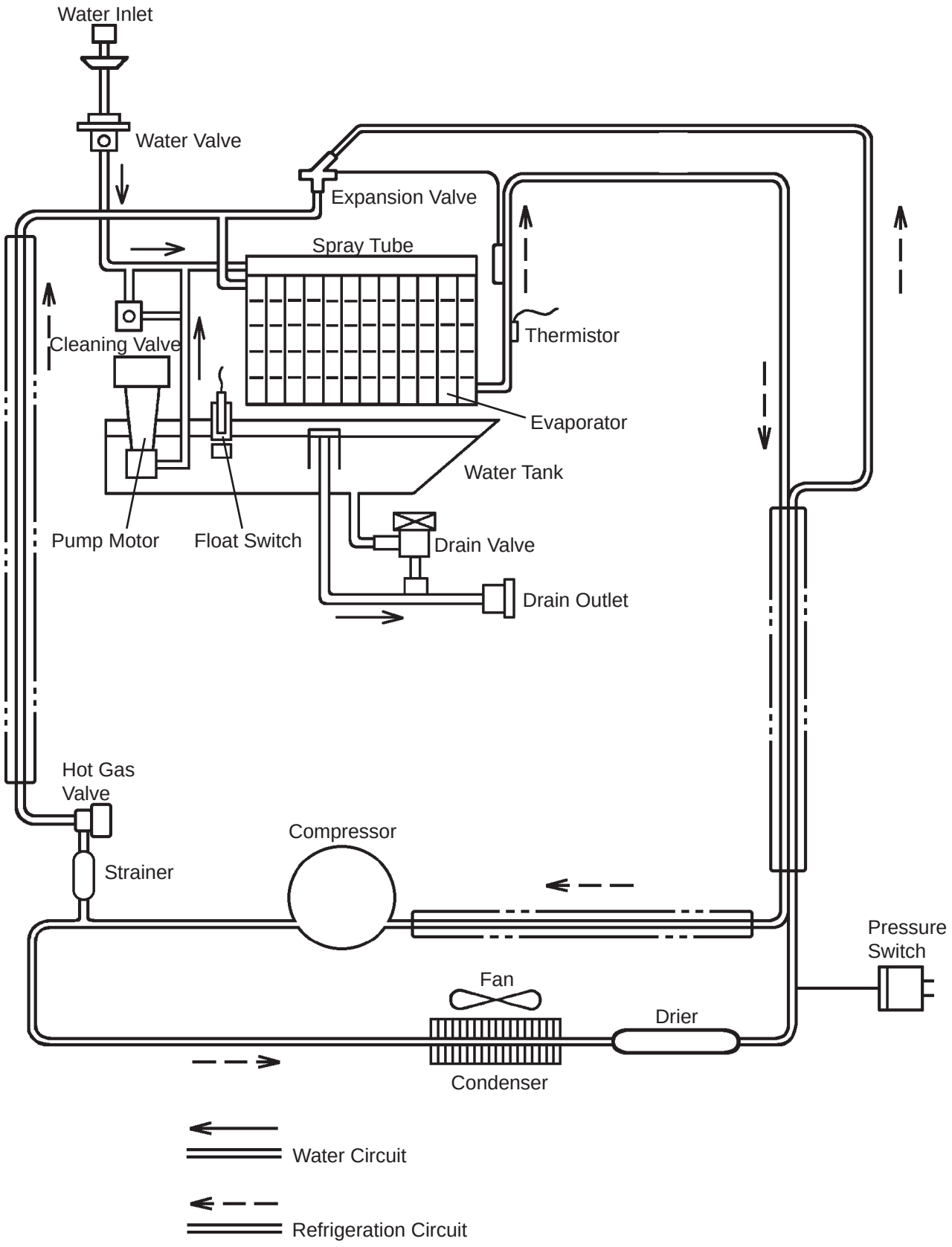
Water Inlet
Water Valve
Expansion Valve
Spray Tube
Thermistor
Cleaning Valve
Evaporator
Water Tank
Pump Motor
Float Switch
Drain Valve
Drain Outlet
Hot Gas
Valve
Compressor
Strainer
Pressure
Switch
Fan
Drier
Condenser
Water Circuit
Refrigeration Circuit

3. KM-160BWJ

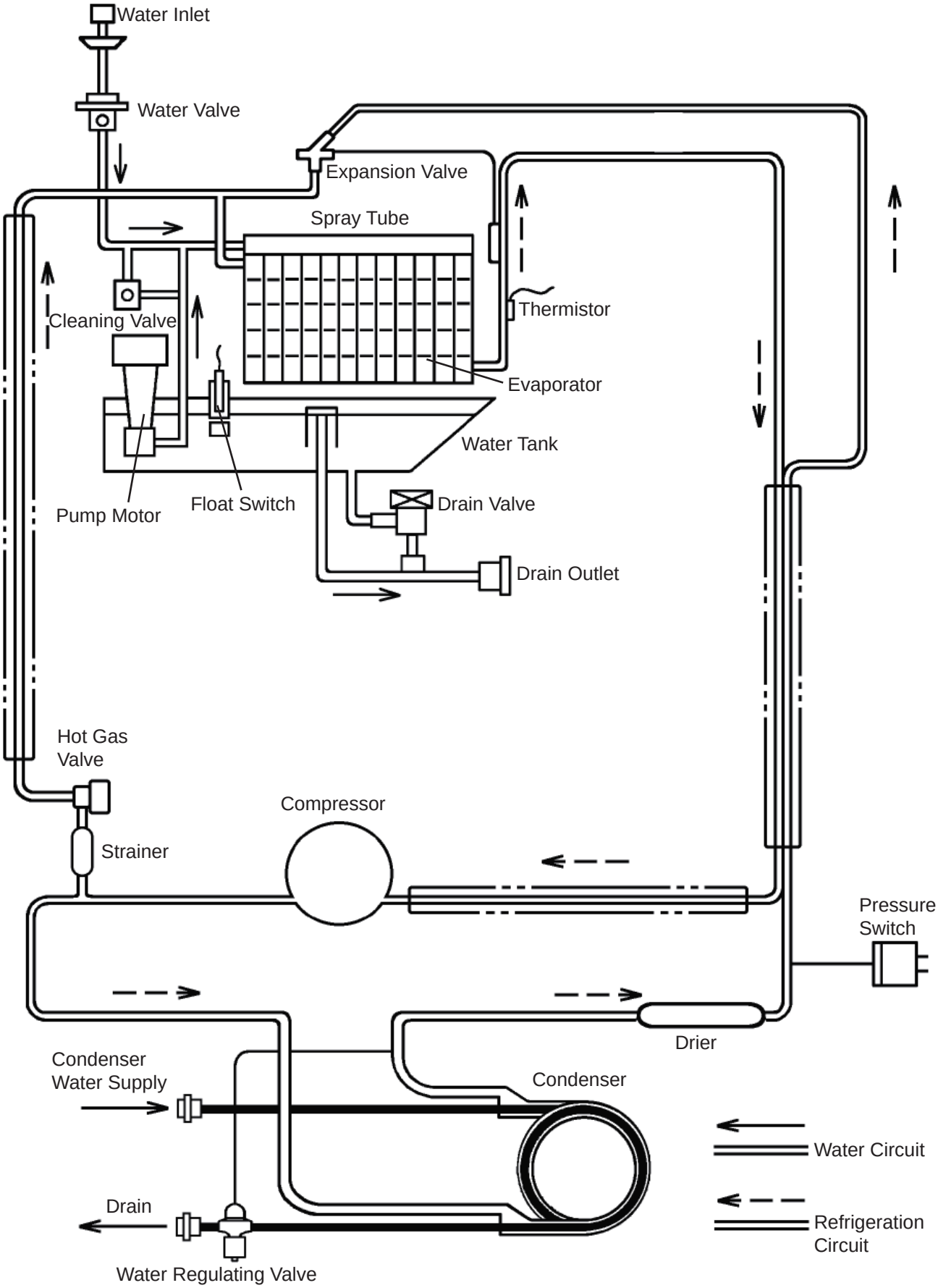
Water Inlet
Water Valve
Expansion Valve
Spray Tube
Thermistor
Cleaning Valve
Evaporator
Water Tank
Pump Motor
Float Switch
Drain Valve
Drain Outlet
Hot Gas
Valve
Compressor
Strainer
Pressure
Switch
Drier
Condenser
Water Supply
Condenser
Water Circuit
Drain
Refrigeration
Circuit
Water Regulating Valve

II. Sequence of Operation and Service Diagnosis

A. Sequence of Operation

1. Flow Chart

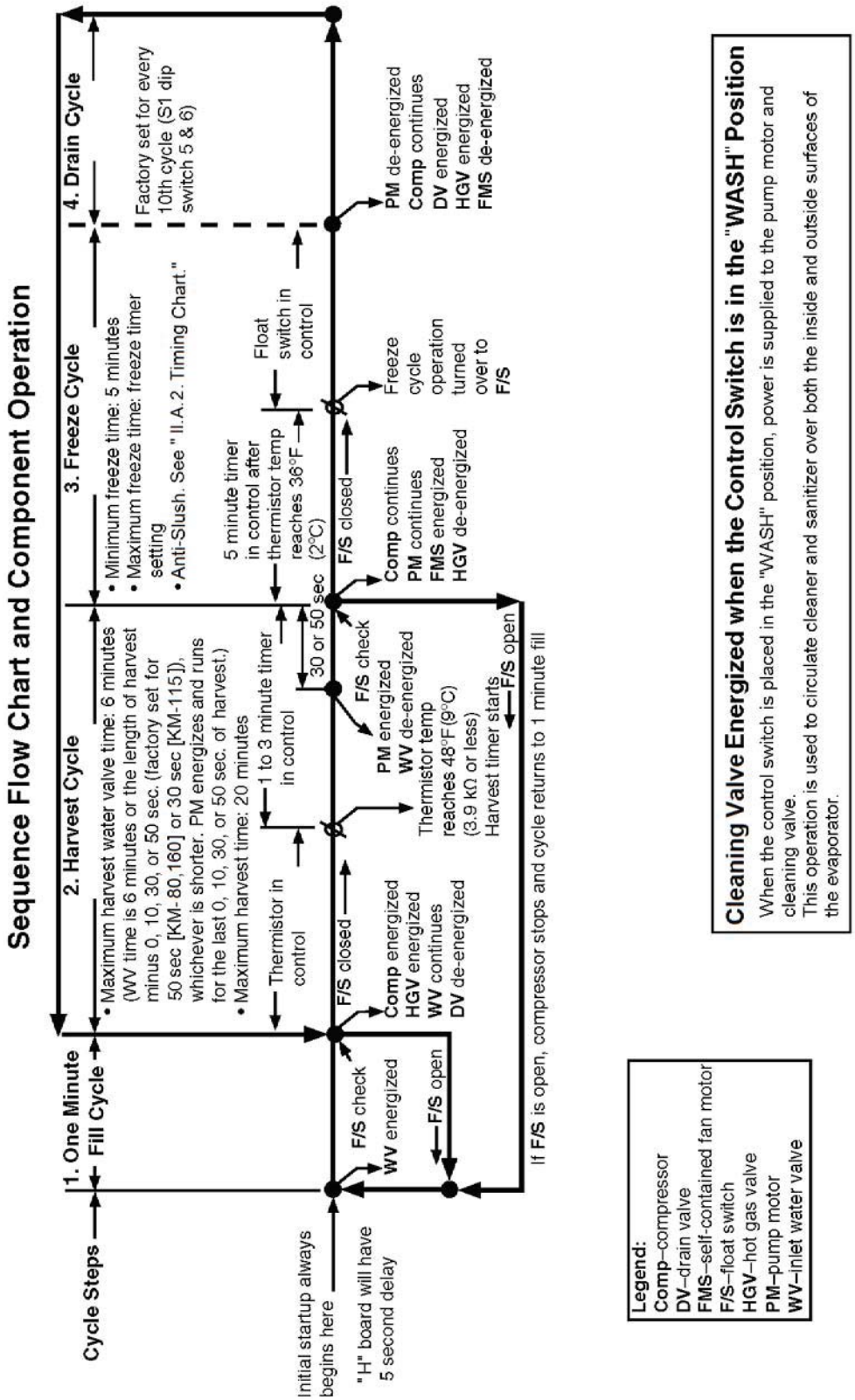

2. Timing Chart

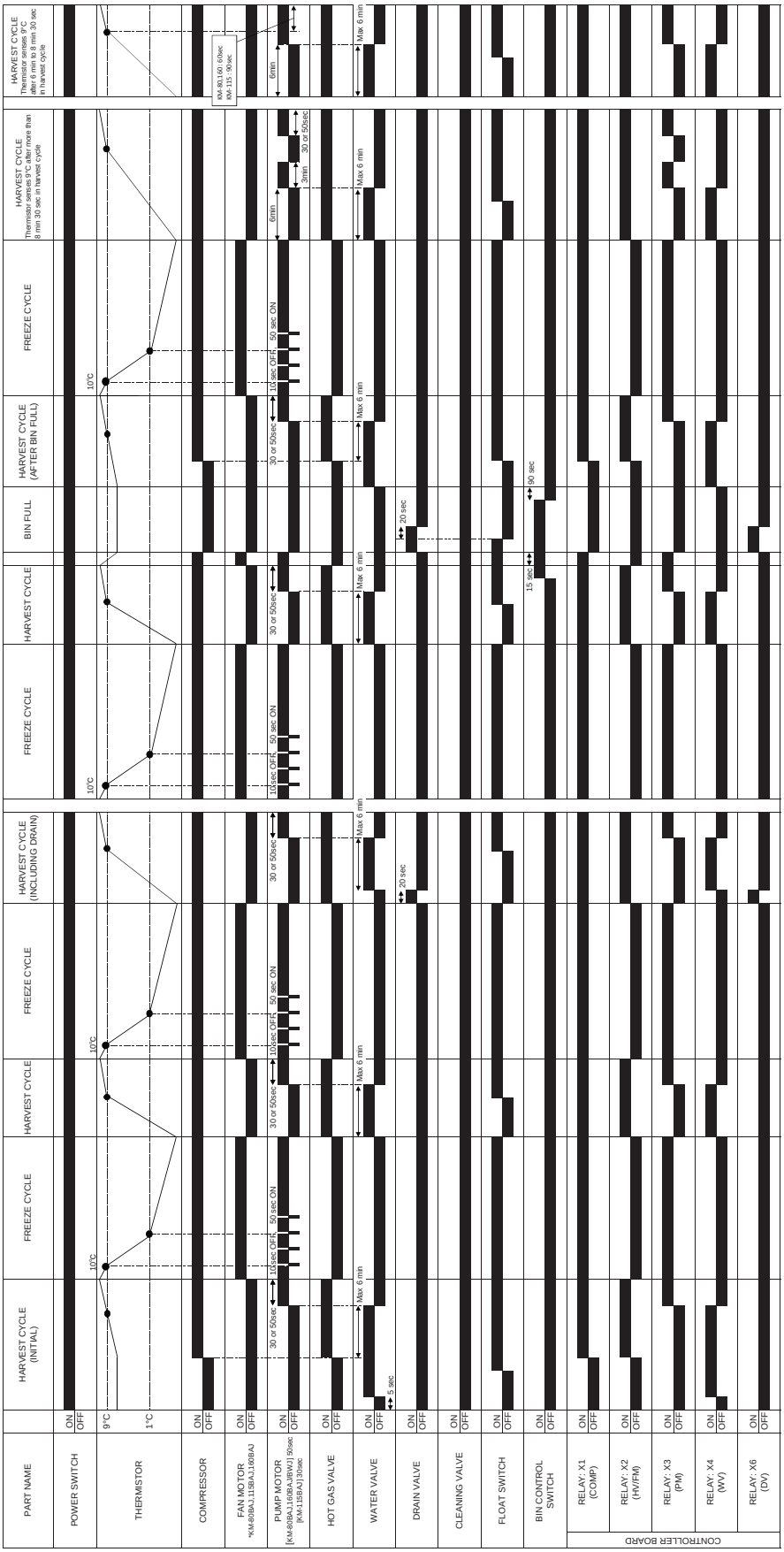

3. Details

The steps in the sequence are as outlined below. When power is supplied, a 5 second delay occurs at startup. Note that the order of the LEDs from the outer edge of the board is 5, 6, 8, 4, and 7.

a) One Minute Fill Cycle

LED 8 is on. WV opens and the fill period begins. After 1 minute, the board checks for a closed F/S. If F/S is closed, the harvest cycle begins. If not, WV will remain energized through additional 1 minute cycles until water enters the sump and F/S closes. This serves as a low water safety to protect the pump motor.

b) Initial Harvest Cycle

LEDs 5, 6, and 8 are on. WV remains open, Comp energizes, HGV opens, and harvest begins. As the evaporator warms, the thermistor located on the suction line checks for a 48°F (9°C) temperature. When 48°F (9°C) is reached, a 3.9 kΩ signal turns the harvest over to the adjustable harvest timer which is factory set for normal conditions. The timer has settings of 60, 90, 120, and 180 seconds (S1 dip switch 1 & 2). When the harvest timer completes its count down, the harvest cycle is complete and the freeze cycle starts. The minimum total time allowed by the board for a complete harvest cycle is 2 minutes. WV is open during harvest for a maximum of 6 minutes or the length of harvest minus 0, 10, 30, or 50 seconds (adjustable by S1 dip switch 7 & 8), whichever is shorter. LED 8 goes off when WV closes. PM energizes and runs for the last 0, 10, 30, or 50 seconds of harvest depending on S1 dip switch 7 & 8 setting. LED 7 comes on when PM energizes. At the end of harvest, the control board checks the position of F/S and proceeds to the freeze cycle if it is closed or calls for a 1-minute fill if it is open.

c) Freeze Cycle

LEDs 5 & 7 are on. Comp continues to run, PM and FMS energize, HGV closes and the freeze cycle starts. For the first 5 minutes after the thermistor temperature reaches 36°F (2°C), the control board will not accept a signal from F/S. This minimum freeze period acts as a short cycle protection. At the end of this period, F/S assumes control. As the evaporator cools, the thermistor located on the suction line checks the temperature and PM stops (see “II. A. 2. Timing Chart” for details). This is to prevent slushing. As ice builds on the evaporator the water level in the sump lowers. The freeze continues until F/S opens and terminates ice production.

d) Drain Cycle

LEDs 4, 5, and 6 are on. Comp continues to run, HGV opens, and PM and FMS de-energize. DV opens for 20 seconds to drain out the water tank. Drain cycle always occurs on the 2nd harvest after startup. Then, depending on the control board setting, drain cycle occurs every cycle, or every 2nd, 5th, or 10th cycle (S1 dip switch 5 & 6).

e) Normal Harvest Cycle

LEDs 5, 6, and 8 are on. Comp continues to run, HGV remains open and WV opens. As the evaporator warms, the thermistor reaches 48°F (9°C). The control board then receives the thermistor's 3.9 kΩ signal and starts the harvest timer. WV is open during harvest for a maximum of 6 minutes or the length of harvest minus 0, 10, 30, or 50 seconds (adjustable by S1 dip switch 7 & 8), whichever is shorter. LED 8 goes off when WV closes. PM energizes and runs for the last 0, 10, 30, or 50 seconds of harvest depending on S1 dip switch 7 & 8 setting. LED 7 comes on when PM energizes. At the end of harvest, the control board checks the position of F/S and proceeds to the freeze cycle if it is closed or calls for a 1-minute fill if it is open.
The unit continues to cycle through c, d, and e sequence until the bin control is activated and shuts the unit down. When the bin control is activated, the “POWER OK” LED flashes.

f) Shutdown

When BC is activated (BC open), the “POWER OK” LED flashes. There is a delay before the shutdown sequence begins. The delay varies depending on the cycle the icemaker is in at the time of activation. For details, see the table below.

Cycle at Bin Control Activation	Delay Before Shutdown Sequence Begins
Fill Cycle	15 seconds
Harvest Cycle	15 seconds after the next freeze cycle starts
Freeze Cycle	15 seconds if BC is activated between the beginning of freeze and termination of the 5-minute short cycle protection timer (timer starts when the thermistor temperature drops to 36°F (2°C) (5.5 kΩ or more)). After this time, the unit will not shut down until the next harvest cycle is complete.

After the delay, all components de-energize. DV energizes after 2 seconds. The water tank drains for a maximum of 5 minutes or until F/S opens. DV then de-energizes. When BC closes again calling for ice, the unit starts at the 1-minute fill cycle. There is a 90-second minimum off time before the icemaker can restart.

Legend: **BC**–bin control; **Comp**–compressor; **DV**–drain valve; **FMS**–self-contained fan motor; **F/S**–float switch; **HGV**–hot gas valve; **PM**–pump motor; **WV**–inlet water valve

B. Service Diagnosis

⚠ WARNING

- The appliance should be diagnosed and repaired only by qualified service personnel to reduce the risk of death, electric shock, serious injury, or fire.
- Risk of electric shock. Control switch in "OFF" position does not de-energize all loads. Use extereme caution and exercise safe electrical practices.
- Moving parts (e.g., fan blade) can crush and cut. Keep hands clear.
- Before servicing the appliance, move the control switch to the “OFF“ position and unplug the appliance.
- **CHOKING HAZARD:** Ensure all components, fasteners, and thumbscrews are securely in place after the appliance is serviced. Make sure that none have fallen into the ice storage bin.
- Make sure all food zones in the appliance and ice storage bin are clean after service.

The diagnostic procedure is basically a sequence check which can be used at unit start-up or for system diagnosis. Using this check out procedure will allow you to diagnose electrical system and component failures in approximately 10 minutes under normal operating conditions of 70°F (21°C) or warmer air and 50°F (10°C) or warmer water temperatures. Before conducting a 10 minute checkout, check for correct installation, proper voltage per unit nameplate and adequate water supply. As you go through the procedure, check to assure the components energize and de-energize correctly. If not, those components and controls are suspect.

1) Remove the air filter. Move the control switch to the “OFF“ position, then unplug the appliance. Access the control box. Clear any ice from the bin control actuator located in the bin.

2) Plug in the appliance, then place the control switch in the “ICE” position. A 5 second delay occurs. The “POWER OK” LED on the control board comes on. If the “POWER OK” LED is flashing (indicating a full bin), check the bin control. See “II. D. 1 Bin Control Check”.

3) One Minute Fill Cycle – The inlet water valve is energized. After 1 minute, the control board checks the float switch. If the float switch is closed, the unit cycles to harvest. If closed, continue to step 4. If the float switch is open, the unit repeats the 1 minute fill cycle until water enters and the float switch closes (low water safety protection during initial start up and at the end of each harvest). **Diagnosis:** If the water valve does not open, check for no supply voltage at water valve terminals, bad coil, or plugged screen or external filter (no water flow). If unit fails to start harvest, check for open float switch or bad 1 minute timer in board.

4) Initial Harvest Cycle – The inlet water valve remains energized, contactor coil energizes to start the compressor (and fan motor on a remote condenser unit), and the hot gas valve energizes. The evaporator warms and the thermistor senses 48°F (9°C). The control board then receives the thermistor's 3.9 kΩ signal and turns operation of harvest over to the harvest timer. The timer completes counting (1 to 3 minutes). The unit then cycles to freeze. **Diagnosis:** Check if compressor is running, hot gas valve is open, water valve still open. Average harvest cycle at factory setting is 2 to 3 minutes. How long does initial harvest last? 1.5 minutes after initial harvest begins, touch the compressor discharge line. Is it hot? If not check refrigerant pressures and compressor operation. If it is hot, touch the inlet line to the evaporator. Is it hot? If it is hot and the freeze cycle is not starting, check the harvest timer adjustment, the thermistor for open circuit, the discharge line temperature, compressor efficiency, and if the hot gas valve is fully open.

5) Freeze Cycle – The compressor remains energized, pump motor, (line valve if applicable), and fan motor energize. The inlet water valve and hot gas valve de-energize. The unit is held in freeze by a 5 minute short cycle protection timer which starts after the thermistor temperature reaches 36°F (2°C). After this period, the freeze cycle operation is transferred to the float switch for freeze termination. During the first 5 minutes of freeze, confirm that the evaporator temperature drops. After the minimum freeze period, disconnect the float switch at the 2-pin connector attached to the red wires. See Fig. 1 for general location. The unit should immediately switch to the drain cycle. **Diagnosis:** If the evaporator is not cold, check to see if the hot gas valve is still open or if the expansion valve (on KM-160BAJ and 160BWJ only) is not opening properly, if the water valve is continuing to fill the reservoir, if there are improper unit pressures or an inoperative compressor. If the unit remains in freeze with the float switch removed, replace the board.

Note: Normal freeze cycle will last 20 to 40 minutes depending on model and conditions. Cycle times and pressures should follow performance data provided in this manual.

6) Drain Cycle – The compressor remains energized, the hot gas valve energizes, the fan motor de-energizes. The drain valve energizes, allowing water to drain from the tank for 20 seconds. This removes contaminants from the water tank. **Diagnosis:** If the drain valve does not open, check the circuit. Check for proper voltage. If water does not drain out, check and clean the tubing at the drain valve and then check and clean the valve assembly.

7) Normal Harvest Cycle – same as the initial harvest cycle – Return to step 4.

8) Shutdown – See "II. D. 1 Bin Control Check". Note that after a bin-control initiated shutdown, there is a 90 second minimum off time.

Note: Unit continues to cycle until bin control is satisfied or power is turned off. (The drain cycle can be adjusted to occur every cycle, or every 2, 5, or 10 cycles. The factory default is every 10 cycles.) The unit always restarts at the 1 minute fill cycle.

C. Control Board Check

Before replacing a control board that does not show a visible defect and that you suspect is bad, always conduct the following check procedure. This procedure will help you verify your diagnosis.

Alarm Reset: If CB is in alarm (beeping), press the “ALARM RESET” button on CB while CB is beeping. **WARNING! Risk of electric shock. Care should be taken not to touch live terminals.** Once reset, the icemaker starts at the 1-minute fill cycle. For audible alarm information, see “III.B. LED Lights and Audible Alarm Safeties.”

1) Remove the louver. Move the control switch to the “OFF” position, then unplug the appliance. Access the control box.

2) Check the dip switch settings to assure that S1 dip switch 3, 4, 7, 8, 9, & 10 and S2 dip switch 1 through 6 are in the factory default position. S1 dip switch 1, 2, 5, & 6 are cleaning adjustments and the settings are flexible.

3) Plug in the appliance. Move the control switch to the “ICE” position and check for proper control voltage. If the “POWER OK” LED is on, the control voltage is good. If the “POWER OK” LED is off, check the control transformer circuit. If no voltage is present, check the power supply circuit.

4) To perform a relay sequence test, move the control switch to the “ICE” position while pressing the “OUTPUT TEST” button. **WARNING! Risk of electric shock. Care should be taken not to touch live terminals.** The correct lighting sequence should be 5, 6, 7, 8, 9, & 4. Some components (e.g., the compressor) will cycle during test. Each LED comes on for 5 seconds. LED 5 is on while LED 6 is on. Following the output test sequence, the icemaker will resume normal operation beginning with the 1 minute fill cycle.

D. Bin Control Check and Cleaning

This machine uses a lever-actuated proximity switch (mechanical bin control) to control the ice level in the storage bin. No adjustment is required.

The bin control is connected to the K1 connector (pins 4 & 5) on the control board. When the bin control is calling for ice (proximity switch closed; “POWER OK” LED on), the control board continues icemaking operations. When the bin control is activated in the bin full position (proximity switch open; “POWER OK” LED flashing), the control board drains and shuts down the unit. However, to prevent incomplete batches of ice from forming on the evaporator, the control board will only shut down the machine during the freeze cycle before the five minute timer expires. The five minute timer starts counting down when the thermistor temperature reaches 36°F (2°C). If, during the freeze cycle, ice pushes in the lever after the five minute timer expires, the control board will allow the

machine to complete the freeze cycle and the following harvest cycle before shutting down the machine.

When the bin control is activated, the “POWER OK” LED flashes. There is a delay before the shutdown sequence begins. The delay varies depending on the cycle the icemaker is in at the time of activation. For details, see the table below.

Cycle at Bin Control Activation	Delay Before Shutdown Sequence Begins
Fill Cycle	15 seconds
Harvest Cycle	15 seconds after the next freeze cycle starts
Freeze Cycle	15 seconds if the bin control is activated between the beginning of freeze and termination of the 5-minute short cycle protection timer (timer starts when the thermistor temperature drops to 36°F (2°C) (5.5 kΩ or more)). After this time, the unit will not shut down until the next harvest cycle is complete.

1. Bin Control Check

1) Remove the air filter. Move the control switch to the “OFF” position, then unplug the appliance. Access the control box.

2) Clear any ice away from the bin control.

3) Disconnect the bin control at the 2-pin connector attached to the black wires (located in the circle in Fig. 1) coming from the K1 connector (pins 4 & 5) on the control board.

4) Check for continuity across the bin control leads. When calling for ice, the bin control proximity switch should be closed. If open, replace the bin control. Activate the bin control actuator (press the actuator in), check for continuity across the bin control leads. The bin control proximity switch should be open. If closed, replace the bin control.

5) Reconnect the 2-pin connector. Plug in the appliance, then move the control switch to the “ICE” position. Allow the machine to cycle into the freeze cycle. In the first 5 minutes of the freeze cycle, activate the bin control actuator (press the actuator in). The “POWER OK” LED should flash and the machine should turn off. If not, replace the control board.

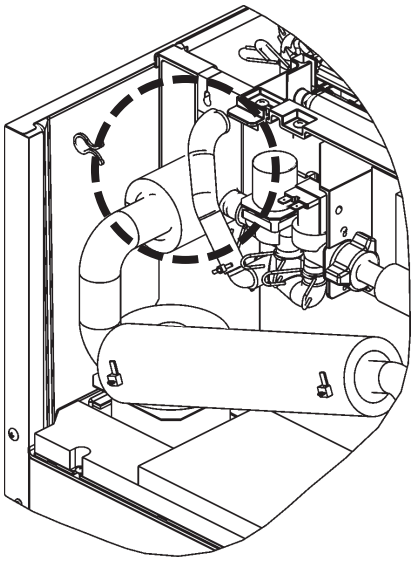

Fig. 1

2. Bin Control Cleaning

Scale may build up on MBC. Scale can cause the actuator paddle and magnet to stick. In this case, MBC should be cleaned.

⚠ WARNING
CHOKING HAZARD: Ensure all components, fasteners, and thumbscrews are securely in place after the icemaker is serviced. Make sure that none have fallen into the ice storage bin.

1) Remove the air filter. Move the control switch to the “OFF” position, then unplug the appliance.

2) Remove the top panel and the rear panel.

3) Disconnect the connector of the MBC lead (black) covered with a silicone hose and remove the lead wire from the grommet.

4) Remove the water tank (see “IV. C. Water Tank”). The bin control switch is located as shown below when viewed from the front.

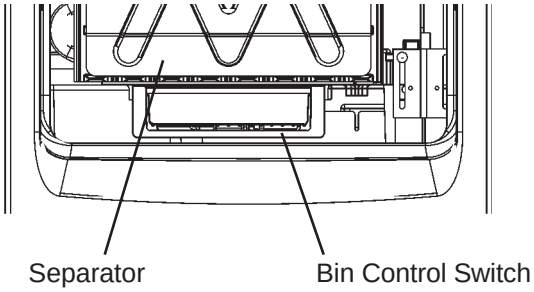

Fig. 2

5) Pull down and remove the lead wire from the retainer on the right side of the bin control switch. See Fig. 3.

6) Hold both sides of the bin control switch and pull it towards you.

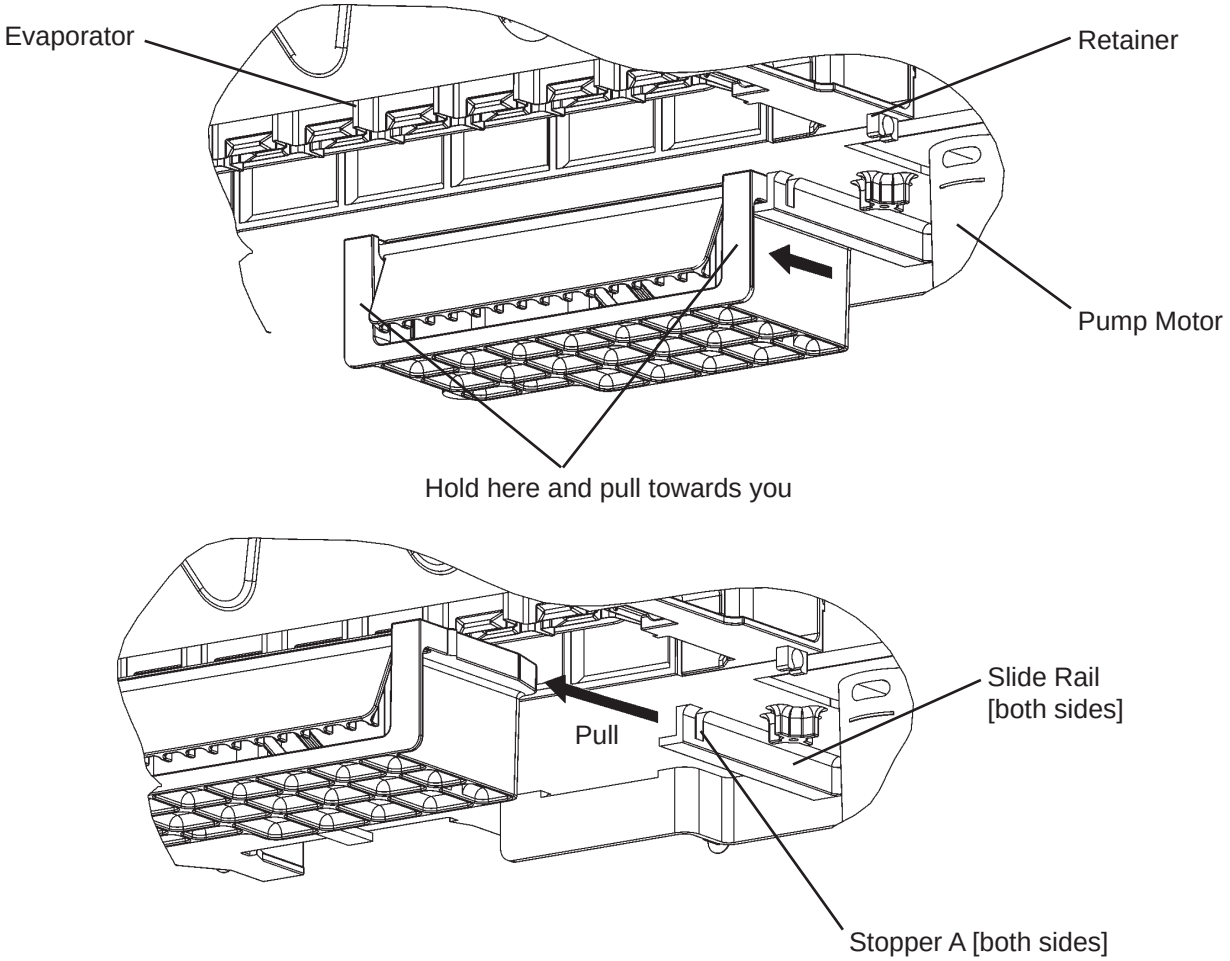
Evaporator
Retainer
Pump Motor
Hold here and pull towards you
Pull
Slide Rail
[both sides]
Stopper A [both sides]

Fig. 3

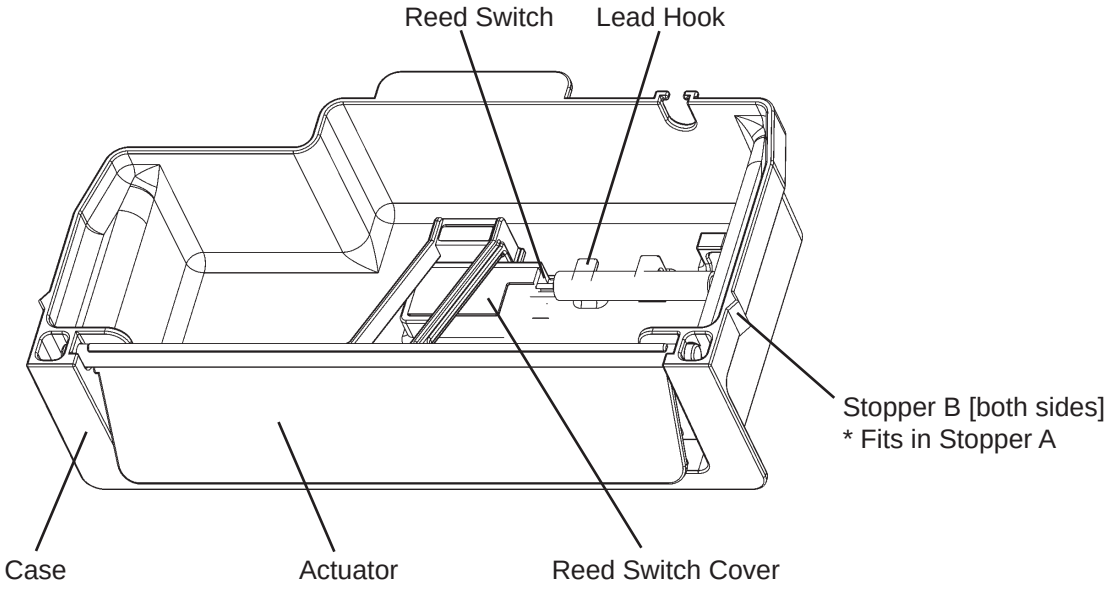
Reed Switch
Lead Hook
Stopper B [both sides]
* Fits in Stopper A
Case
Actuator
Reed Switch Cover

Fig. 4

7) Remove the actuator by slightly flexing both sides and pulling towards you.

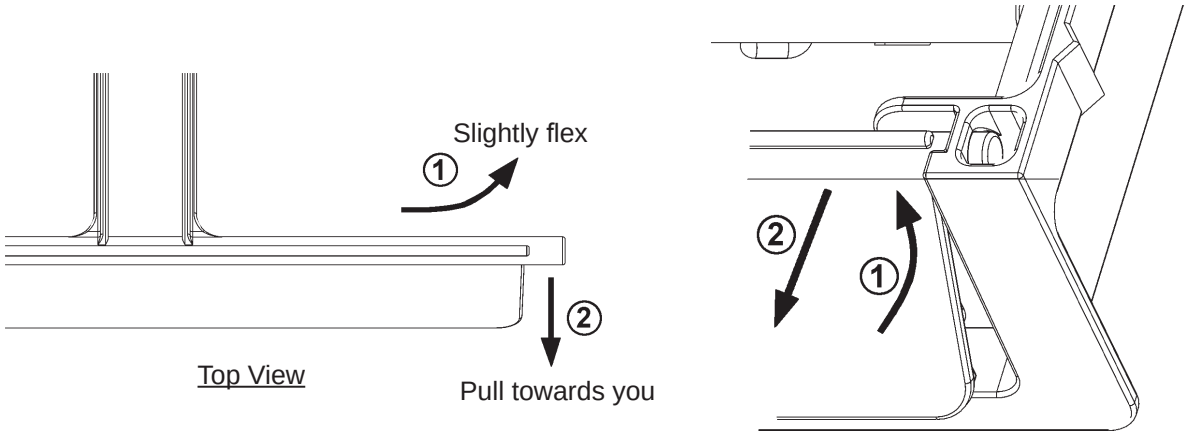

Fig. 5

8) Wipe down MBC with a mixture of 1 part of Hoshizaki “Scale Away” and 25 parts of warm water. Rinse the parts thoroughly with clean water.

9) Replace the removed parts in the reverse order of the removal procedure. Be sure to put the lead wire back in the retainer on the bracket.

10) Plug in the appliance.

Legend: **MBC**–mechanical bin control

E. Float Switch Check and Cleaning

FS is used to determine that there is sufficient water in the water tank after the 1-min. fill cycle and after each harvest cycle. FS is also used to determine that the appropriate volume of water has been converted into ice before switching out of the freeze cycle. No adjustment is required.

1. Float Switch Check

To check FS, follow the steps below.

1) Remove the air filter. Move the control switch to the “OFF” position, then unplug the appliance.

2) Drain the water tank by pulling off the overflow pipe from the water tank bottom and the silicone hose from the storage bin bottom. See Fig. 6.

3) Remove the top panel and the rear panel.

4) Disconnect FS lead connector and remove the lead wire from the grommet opening. See Fig. 7.

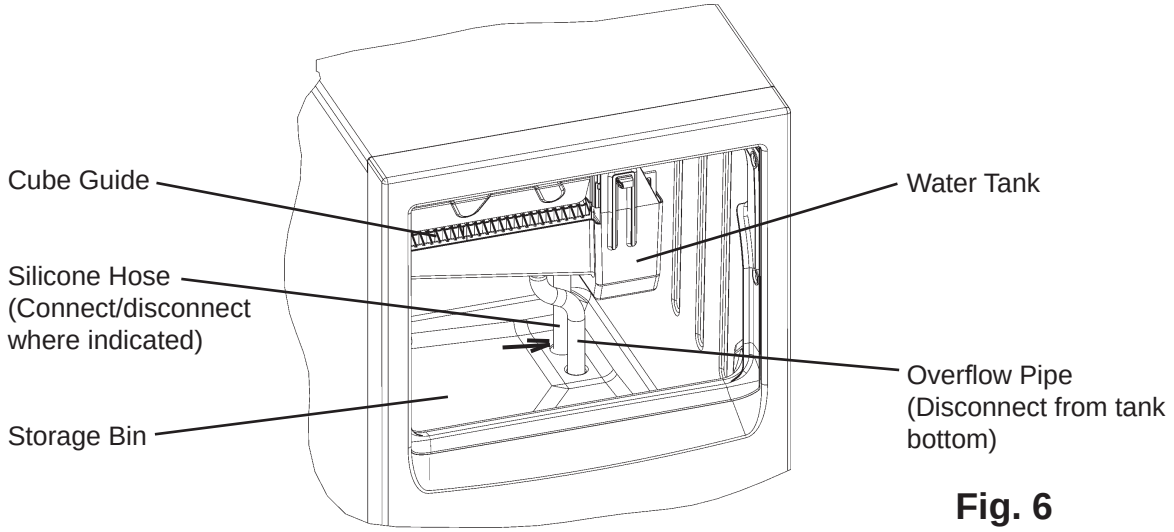

Fig. 6

5) Check for continuity across FS lead. With the water tank empty, FS should be open. If open, continue to step 6. If closed, follow the steps in “II. E. 2. Float Switch Cleaning.“ After cleaning FS, check it again. Replace if necessary.

6) Reconnect FS connector.

7) Move the control switch to the “ICE“ position. Replace the top panel and rear panel in their correct positions, then plug in the appliance. After 1 min., the 1-min. fill cycle should end and the initial harvest cycle should begin. If the initial harvest cycle begins, FS is good and the check is complete. If the initial harvest cycle does not begin, continue to step 8.

8) Move the control switch to the “OFF” position, then unplug the appliance.

9) Remove the top panel and the rear panel.

10) Disconnect the FS lead connector and remove the lead wire from the grommet opening.

11) Check for continuity across FS leads. With the water tank full, FS should be closed. If FS is closed and the icemaker will not switch from the 1-min. fill cycle to the initial harvest cycle, replace CB.
If FS is open, confirm that the water tank is full. If the water tank is not full, check the water supply, water filters, and inlet water valve. If the water tank is full, follow the steps in “II. E. 2. Float Switch Cleaning.” After cleaning FS, check it again. Replace if necessary.

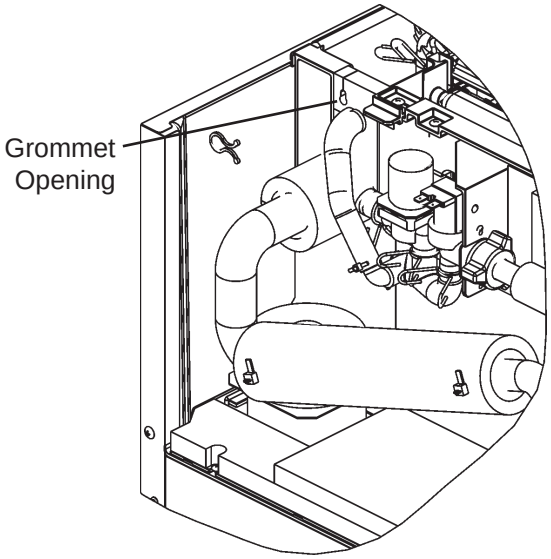

Fig. 7

Legend: **CB**–control board; **FS**-float switch

2. Float Switch Cleaning

Depending on local water conditions, scale may build up on FS. Scale on the switch can cause the float to stick. In this case, FS should be cleaned.

KM-80BAJ, KM-115BAJ

1) Remove the air filter. Move the control switch to the “OFF” position, then unplug the appliance.

2) Remove the top panel and the rear panel.

3) Disconnect FS lead connector and remove the lead wire from the grommet opening.

4) Remove the water tank (see “IV. C. Water Tank”).

5) Remove the screw securing the FS then remove the float switch. Remove the retainer rod from the bottom of FS housing, then remove the float. Be careful not to bend the retainer rod excessively when removing it.

6) Wipe down FS housing, shaft and float with mixture of 1 part Hoshizaki “Scale Away“ and 25 parts warm water. Rinse the parts thoroughly with clean water.

7) Reassemble FS assembly and install the float switch in the reverse order of the removal procedure.

8) Replace the panels in their correct positions.

9) Plug in the appliance, then move the control switch to the “ICE” position.

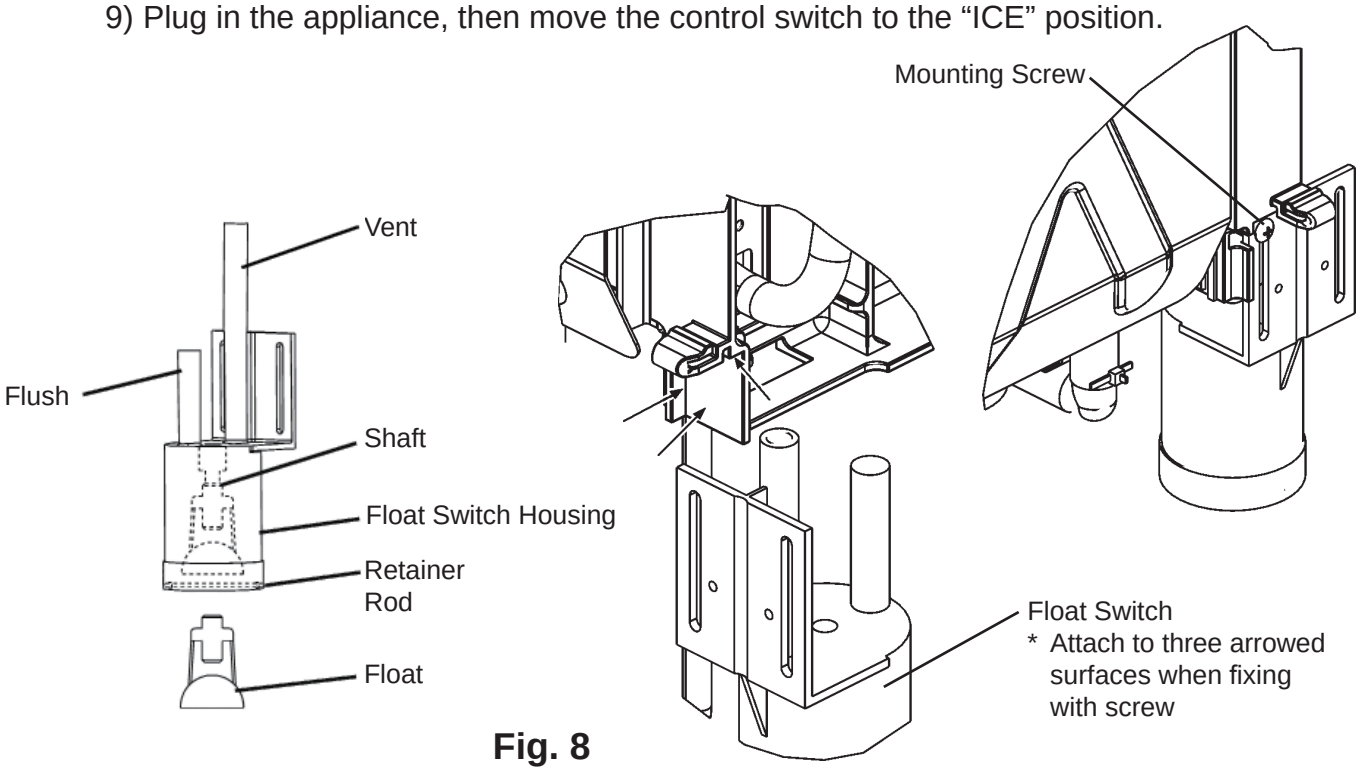

Fig. 8

KM-160BAJ, KM-160BWJ

1) Remove the air filter. Move the control switch to the “OFF” position, then unplug the appliance.

2) Remove the top panel and the rear panel.

3) Disconnect the FS lead (gray) connector.

4) The FS is located behind the pump motor. Pinch where indicated (1) and pull it forward diagonally (2) to unhook the FS.

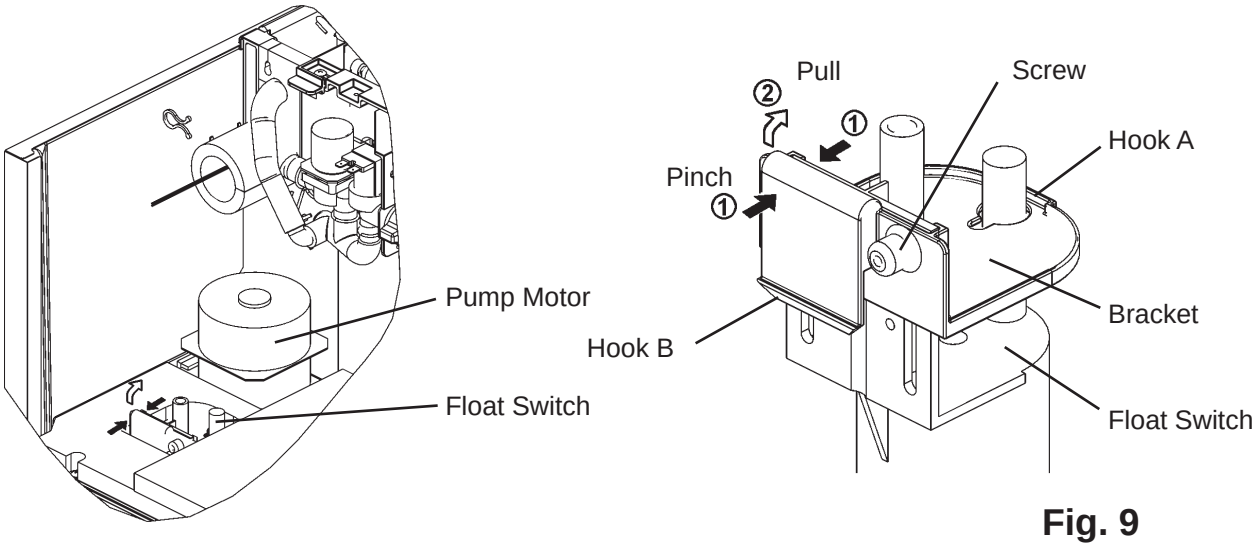

Fig. 9

5) Remove the screw securing the FS to the bracket.

6) Remove the float switch. Remove the retainer rod from the bottom of FS housing, then remove the float. Be careful not to bend the retainer rod excessively when removing it.

7) Wipe down FS housing, shaft, and float with mixture of 1 part Hoshizaki “Scale Away” and 25 parts warm water. Rinse the parts thoroughly with clean water.

8) Reassemble FS assembly.

9) Attach the FS to the bracket rail. See Fig. 10. Secure it with the screw by fitting the rounded end of the slot to the screw hole.

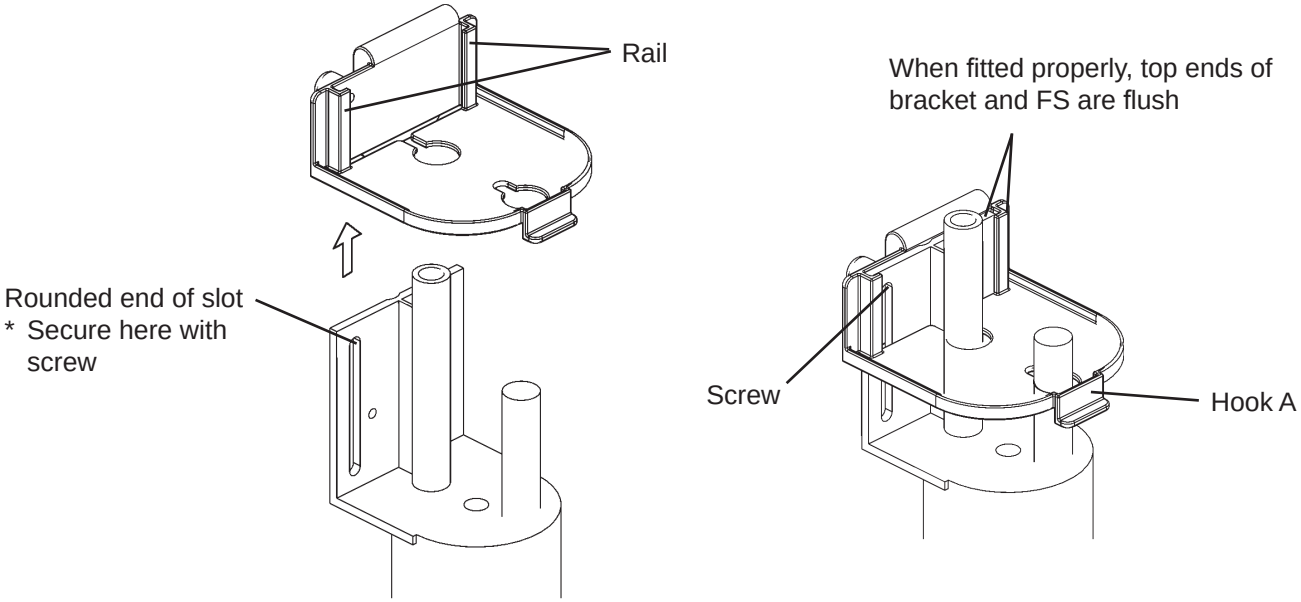

Fig. 10

10) Put the FS down into the mounting hole and hook it in position as shown. See Fig. 11. To ensure proper operation, be sure to fit the hook A under the mounting hole.

11) Replace the removed parts in the reverse order of the removal procedure.

12) Plug in the appliance, then move the control switch to the “ICE” position.

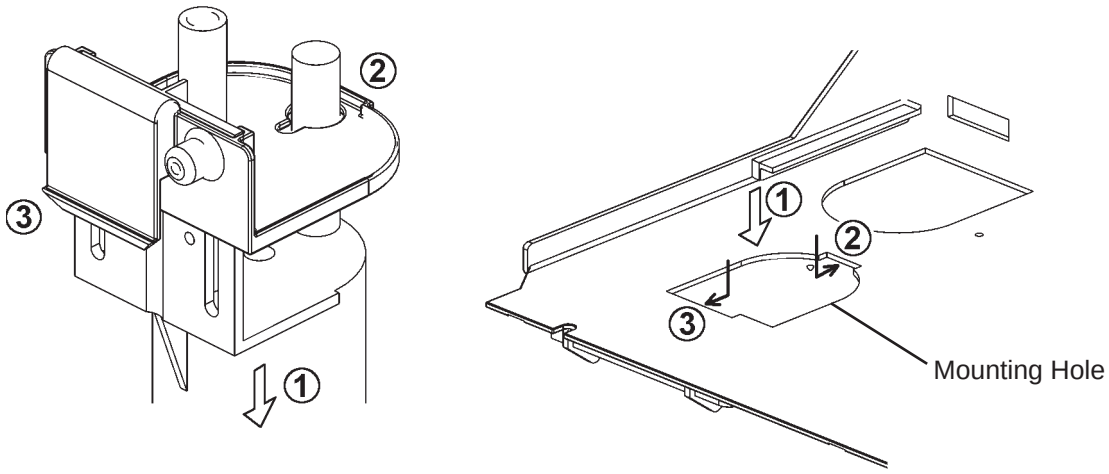

Fig. 11

F. Thermistor Check

A thermistor (semiconductor) is used as a harvest control sensor and anti-slush sensor. The resistance varies depending on the suction line temperatures. The thermistor detects the temperature of the evaporator outlet to start the harvest timer or momentarily stop the pump motor during the freeze cycle. No adjustment is required. If necessary, check for resistance between thermistor leads, and visually check the thermistor mounting, located on the suction line next to the evaporator outlet.

Temperature (°F)	Temperature (°C)	Resistance (kΩ)
0	-18	14.401
10	-12	10.613
32	0	6.000
50	10	3.871
70	21	2.474
90	32	1.633

Check a thermistor for resistance by using the following procedure:

1) Remove the air filter. Move the control switch to the “OFF” position, then unplug the appliance.

2) Disconnect the connector K1 on the board.

3) Remove the thermistor.

4) Immerse the thermistor sensor portion in a glass containing ice and water for 2 or 3 minutes.

5) Check for resistance between the thermistor leads. Normal reading is within 4.7 to 6.2 kΩ. Replace the thermistor if it exceeds the normal reading.

G. Diagnostic Tables

1. No Ice Production

PROBLEM	POSSIBLE CAUSE		REMEDY
[1] The icemaker will not start.	a) Power Supply	1. OFF position.	1. Move to ON position.
		2. Loose connections.	2. Tighten.
		3. Bad contacts.	3. Check for continuity and replace.
		4. Voltage too high.	4. Check and get recommended voltage.
		5. Unplugged.	5. Plug in.
	b) Fuse (inside fused disconnect, if any)	1. Blown.	1. Check for short circuit and replace.
	c) Control Switch	1. OFF or WASH position.	1. Move to ICE position.
		2. Bad contacts.	2. Check for continuity and replace.
	d) Bin Control Switch	1. Tripped with bin filled with ice.	1. Remove ice.
		2. Defective reed switch.	2. Check for continuity and replace.
	e) High Pressure Control (KM-160 only)	1. Bad contacts.	1. Check for continuity and replace.
	f) Transformer	1. Thermal fuse blown or coil winding open.	1. Replace.
	g) Wiring to Control Board	1. Loose connections or open.	1. Check for continuity and replace.
	h) Thermistor	1. Leads shorted or open and high temperature safety operates. If open, unit will start but have long harvest cycle.	1. See “II. F. Thermistor Check”.
	i) Hot Gas Solenoid Valve	1. Continues to open in freeze cycle and high temperature safety operates.	1. Check for power off in freeze cycle and replace.
	j) Water Supply Line	1. Water supply off and water supply cycle does not finish.	1. Check and get recommended pressure. Check for water supply.
		2. Condenser water pressure too low or off and high pressure control opens and closes frequently (water-cooled model).	2. Check and get recommended pressure.
	k) Inlet Water Valve	1. Mesh filter or orifice gets clogged and water supply cycle does not finish.	1. Clean. Replace if necessary.
		2. Coil winding open.	2. Replace.
		3. Wiring to water valve.	3. Check for loose connection or open, and replace.
	l) Control Board	1. Defective.	1. See “II. C. Control Board Check”.

PROBLEM	POSSIBLE CAUSE		REMEDY
[2] Water continues to be supplied, and the icemaker will not start.	a) Float Switch	1. Connector disconnected.	1. Reconnect.
		2. Leads open or defective switch.	2. Check and replace.
		3. Float does not move freely.	3. Clean or replace.
	b) Control Board	1. Defective.	1. Replace.
[3] Compressor will not start or operates intermittently.	a) Control Switch	1. WASH position.	1. Move to ICE position.
		2. Bad contacts.	2. Check and replace.
	b) High Pressure Control (KM-160 only)	1. Dirty air filter or condenser.	1. Clean.
		2. Ambient temperature too warm.	2. Reduce ambient temperature.
		3. Refrigerant overcharged.	3. Recharge.
		4. Fan not operating.	4. See chart 1 - [6].
		5. Condenser water pressure too low or off (water-cooled model).	5. Check and get recommended pressure.
		6. Condenser water temperature too warm (water-cooled model).	6. Check and get recommended temperature.
		7. Refrigerant line or components plugged.	7. Clean and replace drier.
	c) Overload Protector	1. Bad contacts.	1. Check for continuity and replace.
		2. Voltage too low.	2. Increase voltage.
		3. Refrigerant overcharged or undercharged.	3. Recharge.
	d) Starter	1. Bad contacts.	1. Check and replace.
		2. Coil winding open.	2. Replace.
	e) Start Capacitor	1. Defective.	1. Replace.
	f) Power Relay	1. Bad contacts.	1. Check for continuity and replace.
		2. Coil winding open.	2. Replace.
	g) Compressor	1. Wiring to compressor.	1. Check for loose connection or open, and replace.
		2. Defective.	2. Replace.
		3. Protector tripped.	3. Reduce temperature and verify cause.
	h) Control Board	1. Defective.	1. See “II. C. Control Board Check”.
	i) Condenser, Air Filter	1. Clogged with dirt and dust.	1. Clean and unclog.
	j) Water Regulating Valve (water-cooled model)	1. Set too high.	1. Adjust lower.
		2. Clogged or defective.	2. Clean or replace.

PROBLEM	POSSIBLE CAUSE		REMEDY
[4] Water continues to be supplied in freeze cycle.	a) Inlet Water Valve	1. Diaphragm does not close.	1. Check for water leaks with icemaker off. Replace if necessary.
	b) Control Board	1. Defective.	1. See “II. C. Control Board Check”.
[5] No water comes from Spray Tubes. Water Pump will not start, or freeze cycle time is too short.	a) Water Supply Line	1. Water pressure too low and water level in water tank too low.	1. Check and get recommended pressure.
	b) Inlet Water Valve	1. Dirty mesh filter or orifice and water level in water tank too low.	1. Clean.
	c) Water System	1. Water leaks.	1. Check connections for water leaks, and replace.
		2. Clogged.	2. Clean.
	d) Pump Motor	1. Motor winding open.	1. Replace.
		2. Bearing worn out.	2. Replace.
		3. Wiring to pump motor.	3. Check for loose connection or open, and replace.
		4. Defective capacitor.	4. Replace.
		5. Defective or bound impeller.	5. Replace and clean.
	e) Control Board	1. Defective.	1. See “II. C. Control Board Check”.
[6] Fan Motor will not start, or is not operating.	a) Fan Motor	1. Motor winding open.	1. Replace.
		2. Bearing worn out.	2. Replace.
		3. Wiring to fan motor.	3. Check for loose connection or open, and replace.
		4. Fan blade bound (locked fan motor).	4. Check and replace.
	b) Control Board	1. Defective.	1. See “II. C. Control Board Check”.
[7] All components run but no ice is produced.	a) Refrigerant	1. Undercharged.	1. Check for leaks and recharge.
		2. Air or moisture trapped.	2. Replace drier, and recharge.
	b) Compressor	1. Defective.	1. Replace.
	c) Hot Gas Solenoid Valve	1. Continues to open in freeze cycle.	1. Check and replace.

2. Freeze-Up

Defrost and clean the icemaker prior to diagnosing freeze-up. Fill out a freeze-up check list.
See the Hoshizaki America Technician's Pocket Guide or contact your local distributor for a copy of the freeze-up checklist.

PROBLEM	POSSIBLE CAUSE		REMEDY
[1] Freeze cycle time is too long.	a) Float Switch	1. Leads shorted or defective switch.	1. Check and replace.
		2. Float does not move freely.	2. Clean or replace.
	b) Inlet Water Valve	1. Diaphragm does not close.	1. Check for water leaks with icemaker off. Replace if necessary.
	c) Control Board	1. Defective.	1. See "II. C. Control Board Check".
[2] All ice formed on Evaporator does not fall into bin in harvest cycle.	a) Evaporator	1. Scaled up.	1. Clean.
	b) Water Supply Line	1. Water pressure too low.	1. Check and get recommended pressure.
	c) Inlet Water Valve	1. Dirty mesh filter or orifice.	1. Clean.
		2. Diaphragm does not close.	2. Check for water leaks with icemaker off. Replace if necessary.
	d) Ambient and/or water temperature	1. Too cool.	1. Increase temperature.
	e) Thermistor	1. Out of position or loose attachment.	1. See "II. F. Thermistor Check".
	f) Control Board	1. Harvest timer is set too short.	1. Adjust longer, referring to "III. C. 2. Harvest Timer".
		2. Defective.	2. See "II. C. Control Board Check".
[3] Others	a) Spray Tubes	1. Clogged.	1. Clean.
		2. Out of position.	2. Place in position.
	b) Water System	1. Dirty.	1. Clean.
	c) Refrigerant	1. Undercharged.	1. Check for leaks and recharge.
	d) Expansion Valve (KM-160 only)	1. Bulb out of position or loose attachment.	1. Place in position.
		2. Defective.	2. Replace.
	e) Hot Gas Solenoid Valve	1. Coil winding open.	1. Replace.
		2. Plunger does not move.	2. Replace.
		3. Wiring to hot gas valve.	3. Check for loose connection or open, and replace.
	f) Water Supply Line	1. Too small; requires minimum 1/4" nominal ID copper water tubing or equivalent line dedicated per machine.	1. Increase water supply line size.
	g) Water Filter	1. Flow rate too small.	1. Replace with filter that has larger flow rate.

3. Low Ice Production

PROBLEM	POSSIBLE CAUSE	REMEDY
[1] Freeze cycle time is long.	a) See chart 1 - [3] and check dirty air filter or condenser, ambient or water temperature, water pressure, water regulating valve (water-cooled model), and refrigerant charge.	
	b) See chart 2 - [1] and check float switch, inlet water valve, and control board.	
[2] Harvest cycle time is long.	a) See chart 2 - [2] and check control board, thermistor, evaporator, ambient and/or water temperature, water supply line, and inlet water valve.	

4. Abnormal Ice

PROBLEM	POSSIBLE CAUSE		REMEDY
[1] Small cubes	a) Cube Guide, Water Tank	1. Out of position. Circulated water falls into bin.	1. Check that cube guide is properly installed on water tank and tank is fixed securely with snaps.
	b) See chart 1 - [5] and check water supply line, inlet water valve, water system, pump motor, and control board.		
[2] Cloudy or irregular cubes	a) See chart 2 - [1] and - [3] and check float switch, inlet water valve, control board, spray tubes, water system, refrigerant charge and expansion valve.		
	b) Spray Guide	1. Dirty.	1. Clean.
	c) Water Quality	1. High hardness or contains impurities.	1. Install a water filter or softener.

5. Other

PROBLEM	POSSIBLE CAUSE		REMEDY
[1] Icemaker will not stop when bin is filled with ice.	a) Bin Control Switch	1. Completely disconnected and dropped inside bin.	1. Place in position.
		2. Detector broken.	2. Replace.
		3. Detector out of position.	3. Place in position.
		4. Defective reed switch.	4. Check for continuity and replace.
		5. Reed switch out of position.	5. Place in position.
		6. Magnet disconnected from detector.	6. Place in position.
	b) Control Board	1. Defective.	1. See “II. C. Control Board Check”.
[2] Abnormal noise	a) Pump Motor	1. Bearings worn out.	1. Replace.
	b) Fan Motor	1. Bearings worn out.	1. Replace.
		2. Fan blade deformed.	2. Replace fan blade.
		3. Fan blade does not move freely.	3. Replace.
	c) Compressor	1. Bearings worn out, or cylinder valve broken.	1. Replace.
		2. Mounting pad out of position or loose hold-down bolt.	2. Reinstall.
	d) Refrigerant Lines	1. Rub or touch lines or other surfaces.	1. Reposition.
[3] Ice in Storage Bin often melts.	a) Bin Drain	1. Plugged.	1. Clean.

III. Controls and Adjustments

* A HOSHIZAKI exclusive solid-state control is employed in crescent cubers.

* All models are pretested and factory-adjusted.

NOTICE
• Fragile, handle very carefully. • The control board contains integrated circuits, which are susceptible to failure due to static discharge. It is especially important to touch the metal part of the icemaker when handling or replacing the control board. • Do not touch the electronic devices on the control board or the back of the control board. • Do not change wiring and connections. • Do not short out power supply to test for voltage. • Always replace the whole control board assembly if it goes bad.

A. Control Board Layout

"H" Control Board

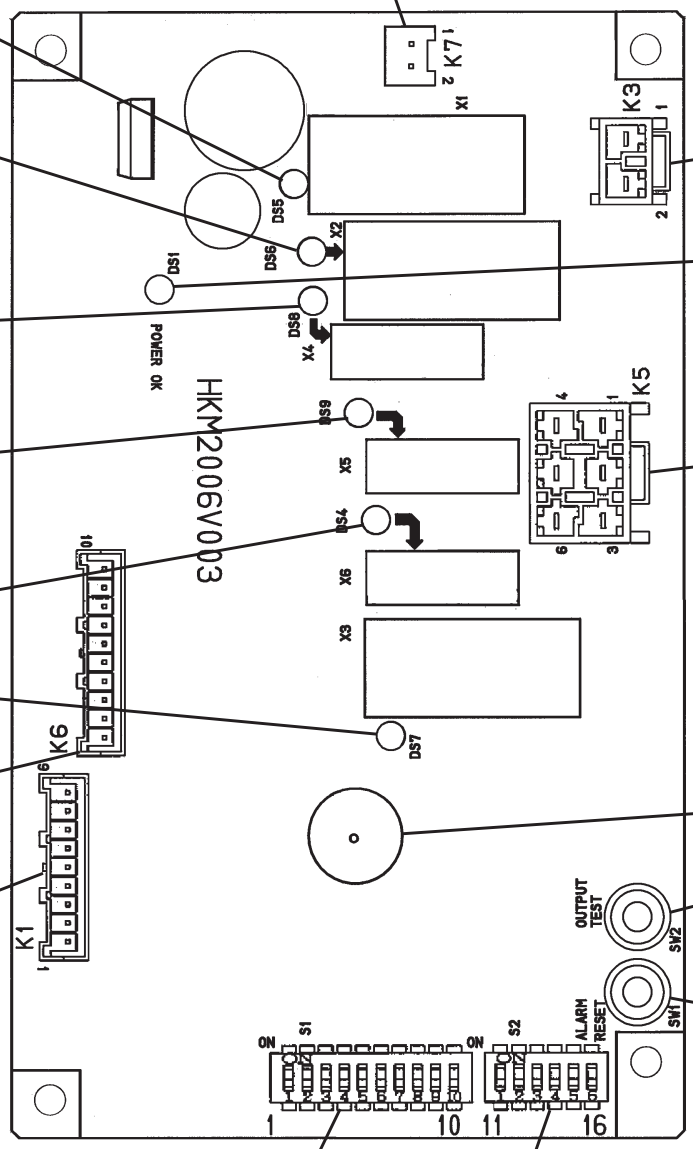

- ***Relay LEDs (6)*** (indicate which relays are energized as listed below)
- **LED 5 (X1 Relay)** Compressor (Comp) Fan Motor-Remote (FMR)
- **LED 6 (X2 Relay)** Hot Gas Valve (HGV) Fan Motor (FM) (FM off when LED on)
- **LED 8 (X4 Relay)** Inlet Water Valve (WV) (WV1) on units with 2 inlet water valves
- **LED 9 (X5 Relay)**
- **LED 4 (X6 Relay)** Drain Valve (DV)
- **LED 7 (X3 Relay)** Pump Motor (PM)
- **K6 Connector** Open
- **K1 Connector** Pins #1, 3 Float Switch #2 Open #4, 5 Bin Control #6, 7 Thermistor #8, 9 Open
- **K7 Connector** Transformer
- **K3 Connector** Power Relay
- **"POWER OK" LED** (Lights when power is supplied to the board. Flashes when bin control is activated.)
- **K5 Connector** Pins #1 Fan Motor (FM) #2 Hot Gas Valve #3 Pump Motor #4 Inlet Water Valve #5 Open #6 Drain Valve
- **Alarm Buzzer**
- **"OUTPUT TEST" Button** (used to test relays on control board)
- **"ALARM RESET" Button**
- **S1 Dip Switch**
- **S2 Dip Switch**

Control Board	
Part Number	P01771-02
Type	HKM2006V003

B. LED Lights and Audible Alarm Safeties

The control board includes LED indicator lights, audible alarm safeties, and an output test feature. The “POWER OK” LED indicates control voltage and will remain on unless a control voltage problem occurs. The “POWER OK” LED flashes continuously when the bin is full and DV energizes for a maximum of 5 minutes to drain the water tank.
At startup, a 5 second delay occurs to stabilize the circuit. LEDs 4 through 8 energize and sequence from initial startup as listed in the table below. Note that the order of the LEDs from the outer edge of the board is 5, 6, 8, 9 (service board only), 4, 7. For more information, see “II. A. Sequence of Operation”.

Sequence Step	LED	Energized Components	Time LEDs are On		
			Min.	Max.	Avg.
1 Minute Fill Cycle	8	WV			60 seconds
Harvest Cycle	5, 6, 8	WV, HGV, Comp	2 minutes	20 minutes	3 to 5 minutes
Last 0, 10, 30, or 50 seconds (adjustable by dip switch) of harvest, WV de-energizes and PM energizes (LEDs 5, 6, and 7 are on)					
Freeze Cycle	5, 7	Comp, PM, FMS	5 minutes	freeze timer setting	30 to 35 minutes
Drain	5, 6, 4	Comp, HGV, DV	10 seconds	20 seconds	factory default setting

The built in safeties shut down the unit and have alarms as listed below.

No. of Beeps (every 3 sec.)	Type of Alarm	Notes
1	High Evaporator Temp. (temperature > 127°F (53°C))	Check for harvest problem (stuck HGV or relay), hot water entering unit, stuck HM, or shorted thermistor.
2	Harvest Backup Timer (harvest > 20 min. for two cycles in a row)	Check for open thermistor, HGV not opening, TXV leaking by, low charge, inefficient Comp, or WRV leaking by.
3	Freeze Timer (freeze > specified setting for two cycles in a row) Timer is factory set using S1 dip switch 9 & 10	Check for a float switch stuck closed (up), WV leaking by, HGV leaking by, PM not pumping, TXV not feeding properly, low charge, or inefficient Comp.
To reset the above safeties, press the “ALARM RESET” button with the power supply on.		
6	Low Voltage (92Vac ± 5% or less)	“POWER OK” LED will turn off if voltage protection operates. The control voltage safeties automatically reset when voltage is corrected.
7	High Voltage (147Vac ± 5% or more)	

Legend: **Comp**–compressor; **DV**–drain valve; **FMS**–self-contained fan motor; **HGV**–hot gas valve; **PM**–pump motor; **TXV**–thermostatic expansion valve; **WRV**–water regulating valve; **WV**–inlet water valve

C. Settings and Adjustments

NOTICE
Dip switches are factory set. Failure to maintain factory settings may adversely affect performance and warranty coverage.

1. Default Dip Switch Settings

The dip switch is factory-adjusted to the following positions:

S1 Dip Switch No.	1	2	3	4	5	6	7	8	9	10
KM-80BAJ	OFF	OFF	ON	OFF	ON	ON	ON	ON	OFF	ON
KM-115BAJ	ON	OFF	ON	OFF	ON	ON	OFF	ON	OFF	ON
KM-160BAJ KM-160BWJ	OFF	OFF	ON	ON	ON	ON	ON	ON	OFF	ON

S2 Dip Switch No.	1	2	3	4	5	6
KM-80BAJ KM-115BAJ KM-160BAJ KM-160BWJ	OFF	OFF	OFF	OFF	OFF	ON

Do not adjust the S2 dip switch. These must be left in the factory default position, or the unit will not operate properly.

S1 Dip Switch

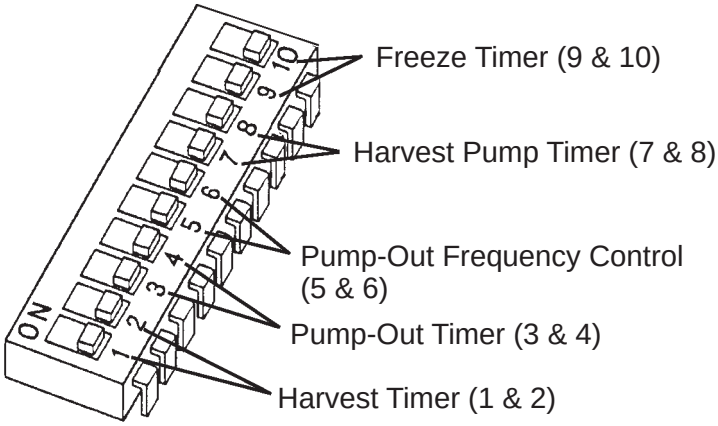

Fig. 12

S2 Dip Switch

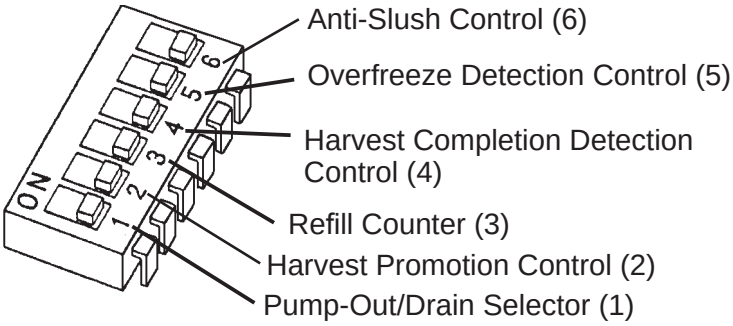

Fig. 13

2. Harvest Timer (S1 dip switch 1 & 2)

The harvest timer starts counting when the thermistor reached 48°F (9°C) at the evaporator outlet and the control board reads 3.9 kΩ from the thermistor. The harvest timer is factory set, and generatally no adjustment is required. However, a setting

longer than the factory setting may be advertised in cases where the drain provided at harvest needs to be prolonged for extra cleaning. Before changing this setting, contact Hoshizaki Technical Support at 1-800 233-1940 for recommendations. Keep in mind that setting the harvest timer to a longer setting decreases 24-hour production.
Note that the pump-out timer (S1 dip switch 3 & 4) acts in place of the harvest timer during cycles with a pump out. For details, see “III. C. 3. Pump-Out Timer (S1 dip switch 3 & 4).“
Note: On models with a pump-out every cycle, the harvest timer is only relevant during the initial harvest cycle since a pump out occurs every cycle there after.

Dip Switch Setting		Time (seconds)
No. 1	No. 2	
OFF	OFF	60
ON	OFF	90
OFF	ON	120
ON	ON	180

3. Pump-Out Timer (S1 dip switch 3 & 4)

The pump motor stops for 2 seconds, then allowing the pump motor and drain valve to energize. Water is removed from the bottom of the water tank and sent down the drain. The pump-out drains the water tank for the time determined by the pump-out timer. The pump-out timer also acts in place of the harvest timer during cycles with a pump-out. The pump-out timer is factory set, and generally no adjustment is required. The pump-out timer control can be set to pump-out for 10 or 20 seconds.

Dip Switch Setting		Time (seconds)	
No. 3	No. 4	T1	T2
OFF	OFF	10	120
ON	OFF	20	160
OFF	ON	20	120
ON	ON	20	180

T1: Time to drain the water tank
T2: Harvest timer at pump-out

4. Drain Frequency Control (S1 dip switch 5 & 6)

The water tank drains at the frequency set by the drain frequency control.
The drain frequency control is factory-adjusted to drain the water tank every 10 cycles, and no adjustment is required. However, where water quality is bad and the icemaker needs a drain more often, the drain frequency can be adjusted as shown in the table below.

Dip Switch Setting		Frequency
No. 5	No. 6	
OFF	OFF	every cycle
ON	OFF	every 2 cycles
OFF	ON	every 5 cycles
ON	ON	every 10 cycles

5. Harvest Pump Timer (S1 dip switch 7 & 8)

The harvest pump timer allows the water valve to close and the pump motor to circulate water in the tank during the final part of harvest. The water valve is open during harvest for a maximum of 6 minutes or the length of harvest minus 0, 10, 30, or 50 seconds (determined by the harvest pump timer setting), whichever is shorter. When the water valve closes, the pump motor energizes and runs for the time determined by the harvest pump timer setting.
The harvest pump timer is factory-adjusted, and no adjustment is required.

Dip Switch Setting		Time (seconds)
No. 7	No. 8	
OFF	OFF	0
ON	OFF	10
OFF	ON	30
ON	ON	50

6. Freeze Timer (S1 dip switch 9 & 10)

NOTICE
Adjust to proper specification, or the unit may not operate correctly.

The freeze timer setting determines the maximum allowed freeze time to prevent possible freeze-up issues. Upon termination of freeze timer, machine initiates the harvest cycle. After 2 consecutive timer terminations, machine will shut down, possibly indicating a problem.
The freeze timer is factory adjusted, and no adjustment is required.

Dip Switch Setting		Time (minutes)
No. 9	No. 10	
OFF	OFF	60
ON	OFF	50
OFF	ON	70
ON	ON	100

7. Pump-Out/Drain Selector (S2 dip switch 1)

The pump-out/drain selector setting determines whether the pump motor energizes

(pump-out) or stays off (drain) after a 2-second delay at the beginning of the pump-out cycle or at shutdown. Regardless of the pump-out/drain selector setting, the drain valve energizes after a 2-second delay at the beginning of the pump-out cycle or at shutdown. When the pump-out/drain selector is set to pump-out, the pump motor takes water from the tank and forces it through the drain valve and down the drain. When the pump-out/drain selector is set to drain, water drains by gravity through the drain valve.

S2 Dip Switch Setting No. 1	Pump Operation Setting
OFF	Drain
ON	Pump-Out

8. Harvest Promotion Control (S2 dip switch 2)

Do not adjust. This must be left in the factory default position or the unit will not operate properly.
When activated, this control promotes harvest of ice on the evaporator that is hard to remove. If the harvest cycle exceeds 6 minutes, the pump motor starts to operate for a maximum of 3 minutes.

S2 Dip Switch Setting No. 2	Harvest Promotion Control
OFF	Activated
ON	Deactivated

9. Refill Counter (S2 dip switch 3)

Do not adjust. This must be left in the factory default position or the unit will not operate properly. The KM-80BAJ, KM-115BAJ, and KM-160BAJ/BWJ do not refill.

10. Harvest Completion Detection Control (S2 dip switch 4)

Do not adjust. This must be left in the factory default position or the unit will not operate properly.
It is deactivated on the KM-80BAJ, KM-115BAJ, and KM-160BAJ/BWJ.
When activated, this control determines whether ice remains on the evaporator at the end of a harvest cycle and at the beginning of a freeze cycle. If ice drops and activates the bin control switch in the last 10 seconds of a harvest cycle, the control determines that ice still remains on the evaporator and extends the harvest cycle for 30 seconds. If the bin control switch is activated at the beginning of a freeze cycle, the control determines that ice still remains on the evaporator and starts a harvest cycle after the minimum freeze cycle time has passed.

S2 Dip Switch Setting No. 4	Harvest Completion Detection Control
OFF	Deactivated
ON	Activated

11. Overfreeze Detection Control (S2 dip switch 5)

Do not adjust. This must be left in the factory default position or the unit will not operate properly.
It is deactivated on the KM-80BAJ, KM-115BAJ, and KM-160BAJ/BWJ.
When activated, the thermistor detects the temperature of the evaporator outlet to find overfreeze in a harvest cycle and at the beginning of a freeze cycle. If the difference between the maximum temperature after the harvest pump timer starts counting and the temperature at the end of a harvest cycle is 7.2°F (4°C) or more and if the temperature at the end of a harvest cycle is 48°F (9°C) or less, the harvest cycle is extended for 30 seconds. If the difference between the temperature at the beginning of a freeze cycle and the minimum temperature after 30 seconds in the freeze cycle is 2.5K or more and less than 3.5K, the next harvest cycle is extended for 30 seconds. If the above conditions occur in succession, the number of occurrence times 30 seconds will be added to the harvest cycle time. If the above temperature difference is 3.5K or more, the freeze cycle ends after the minimum freeze cycle time and a harvest cycle starts.
If the evaporator outlet temperature is more than 38.3°F (3.5°C) but not more than 41°F (5°C) at the end of harvest cycle, the harvest cycle is extended for 50 seconds before moving on to the freeze cycle. If the evaporator outlet temperature is 38.3°F (3.5°C) or less, another harvest cycle starts. The harvest cycle does not repeat more than three times. The freeze cycle starts even if the evaporator outlet temperature is 38.3°F (3.5°C) or less at the end of the third harvest cycle.

S2 Dip Switch Setting	Overfreeze Detection Control
No. 5	
OFF	Deactivated
ON	Activated

12. Anti-Slush Control (S2 dip switch 6)

Do not adjust. This must be left in the factory default position or the unit will not operate properly.
When activated (Ver. 1.1), the thermistor located on the suction line checks for a 41°F (5°C) temperature as the evaporator cools. When 41°F (5°C) is reached, a 4.8 kΩ signal causes the control board to de-energize the pump motor for 10 seconds.
When activated (Ver. 2.0), the thermistor located on the suction line checks for a 50°F (10°C) temperature as the evaporator cools. When 50°F (10°C) is reached, a 3.9 kΩ signal causes the control board to de-energize the pump motor for 10 seconds and energize it for 50 seconds repeatedly. When 34°F (1°C) is reached, a 5.9 kΩ signal causes the control board to de-energize the pump motor for 10 seconds, energize it for 50 seconds, de-energize it again for 10 seconds, then energize it continuously.

S2 Dip Switch Setting	Anti-Slush Control
No. 6	
OFF	Activated (Ver. 1.1)
ON	Activated (Ver. 2.0)

13. Control Board Replacement

The dip switches should be adjusted to the factory default settings as outlined in this manual.

D. Switches

Control Switch

The control switch is located at the left front of the unit. Remove the air filter to access the control switch. This switch is used to place the machine into one of three modes: “OFF”, “ICE”, and “WASH”.

1) “OFF”

In the “OFF” position, no power is supplied to the unit. However, to avoid any possible risk of electrical shock, disconnect the power before servicing.

2) “ICE”

This position applies power to the unit causing the automatic icemaking process to begin. Refer to “II. Sequence of Operation and Service Diagnosis” for further details.

3) “WASH”

When the control switch is placed in the “WASH” position, power is supplied to the pump motor and cleaning valve. This allows cleaning and/or sanitizing solutions (see “V. Maintenance”) to circulate throughout the water system and down the inside and outside of the evaporator plates.

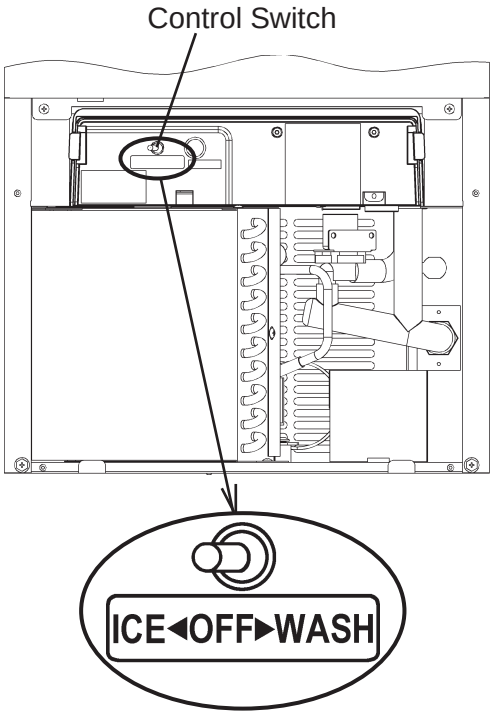

Fig. 14

IV. Refrigeration Circuit and Component Service Information

⚠ WARNING

- This appliance should be diagnosed and repaired only by qualified service personnel to reduce the risk of death, electric shock, serious injury, or fire.
- To reduce the risk of electric shock, do not touch the control switch or plug with damp hands. Make sure the control switch is in the "OFF" position before plugging in or unplugging the appliance.
- Move the control switch to the "OFF" position and unplug the appliance from the electrical outlet before servicing.
- **CHOKING HAZARD:** Ensure all components, fasteners, and thumbscrews are securely in place after any maintenance is done to the appliance. Make sure that none have fallen into the storage bin.
- Make sure all food zones in the icemaker and storage bin are clean after service.

A. Refrigeration Circuit Service Information

⚠ WARNING

- Repairs requiring the refrigeration circuit to be opened must be performed by properly trained and EPA-certified service personnel.
- Use an electronic leak detector or soap bubbles to check for leaks. Add a trace of refrigerant to the system (if using an electronic leak detector), and then raise the pressure using nitrogen gas (140 PSIG). Do not use R-134a as a mixture with pressurized air for leak testing.

NOTICE

- Always recover the refrigerant and store it in an approved container. Do not discharge the refrigerant into the atmosphere.
- Do not leave the system open for longer than 15 min. when replacing or servicing parts. The Polyol Ester (POE) oils used in R-134a applications can absorb moisture quickly. Therefore it is important to prevent moisture from entering the system when replacing or servicing parts.
- Always install a new drier every time the sealed refrigeration system is opened. Do not replace the drier until after all other repair or replacement has been made. Install the new drier with the arrow on the drier in the direction of the refrigerant flow.
- When brazing, protect the drier by using a wet cloth to prevent the drier from overheating. Do not allow the drier to exceed 250°F (121°C).

1. Refrigerant Recovery

No refrigerant access valves are provided on this appliance. Using proper refrigerant practices, utilize a temporary tap-line valve on the high side to recover the refrigerant. Store the refrigerant in an approved container. Do not discharge the refrigerant into the atmosphere. After recovery is complete, replace the tap-line valve with a proper, permanent access valve.

2. Brazing

⚠ WARNING

- R-134a itself is not flammable at atmospheric pressure and temperatures up to 176°F (80°C).
- R-134a itself is not explosive or poisonous. However, when exposed to high temperatures (open flames), R-404A can be decomposed to form hydrofluoric acid and carbonyl fluoride both of which are hazardous.
- Do not use silver alloy or copper alloy containing arsenic.

1) Braze all fittings while purging with nitrogen gas flowing at a pressure of 3 to 4 PSIG.
   Note: Because the pipes in the evaporator case are specially coated to resist corrosion, it is important to make connections outside the evaporator case when possible. If it is necessary to braze inside the evaporator case, use sandpaper to remove the coating from the brazing connections before unbrazing the components.

NOTICE

- Always install a new drier every time the sealed refrigeration system is opened.
- Do not replace the drier until after all other repair or replacement has been made. Install the new drier with the arrow on the drier in the direction of the refrigerant flow.
- When brazing, protect the drier by using a wet cloth to prevent the drier from overheating. Do not allow the drier to exceed 250°F (121°C).

2) Use an electronic leak detector or soap bubbles to check for leaks. Add a trace of refrigerant to the system (if using an electronic leak detector), and then raise the pressure using nitrogen gas (140 PSIG). Do not use R-134a as a mixture with pressurized air for leak testing.

3. Evacuation and Recharge (R-134a)

1) Attach a vacuum pump to the system. Be sure the high-side charging hose is connected to the field-installed high-side access valve.

IMPORTANT
The vacuum level and vacuum pump may be the same as those for current refrigerants. However, the rubber hose and gauge manifold to be used for evacuation and refrigerant charge should be exclusively for POE oils.

2) Turn on the vacuum pump. Open the gauge manifold valves. Never allow the oil in the vacuum pump to flow backwards.

3) Allow the vacuum pump to pull down to a 29.9” Hg vacuum. Evacuating period depends on pump capacity.

4) Close the high-side valve on the gauge manifold.

5) Disconnect the gauge manifold hose from the vacuum pump and attach it to a refrigerant service cylinder. Remember to loosen the connection and purge the air from the hose. For the required refrigerant charge, see the nameplate. Hoshizaki recommends only virgin refrigerant or reclaimed refrigerant which meets AHRI Standard 700 (latest edition) be used.

6) A liquid charge is required when charging an R-134a system. Place the service cylinder on the scales; if the service cylinder is not equipped with a dip tube, invert the service cylinder, then place it on the scales. Open the high-side valve on the gauge manifold.

7) Allow the system to charge with liquid until the proper charge weight is met.

8) Close the high-side valve on the gauge manifold, then close the refrigerant access valve (if applicable). Disconnect the gauge manifold hose.

9) Cap the access valve to prevent a possible leak.

B. Component Service Information

NOTICE
When replacing a component listed below, see the notes to help ensure proper operation.

Component	Notes
Compressor	Install a new start capacitor and start relay. (If applicable)
Thermostatic Expansion Valve (KM-160 only)	• Attach the thermostatic expansion valve bulb to the suction line in the same location as the previous bulb. • The bulb should be between the 10 and 2 o'clock positions on the tube. • Secure the bulb with the clamp and holder, then insulate it.
Hot Gas Valve	• Replace the strainer if applicable. • Use copper tube of the same diameter and length when replacing valve lines.
Pump Motor	Install a new capacitor.

Thermistor	• Attach the new thermistor to the same location on the previous thermistor. • Smoothly fill the recessed area of the thermistor holder with high thermal conductive type sealant. Hoshizaki America part number 4A0683-01 (Silicone Heat Sink Compound 10-8108 manufactured by GC Electronics), KE-4560 RTV (manufactured by ShinEtsu Silicones), or equivalent are recommended. • Attach the new thermistor in position and press down the thermistor holder over the thermistor. • Be very careful to prevent damage to the leads.

C. Water Tank

1) Remove the air filter. Move the control switch to the “OFF” position, then unplug the appliance. Remove all ice from the storage bin.

2) Drain the water tank by pulling off the overflow pipe from the water tank bottom and the silicone hose from the storage bin bottom. See Fig. 15.

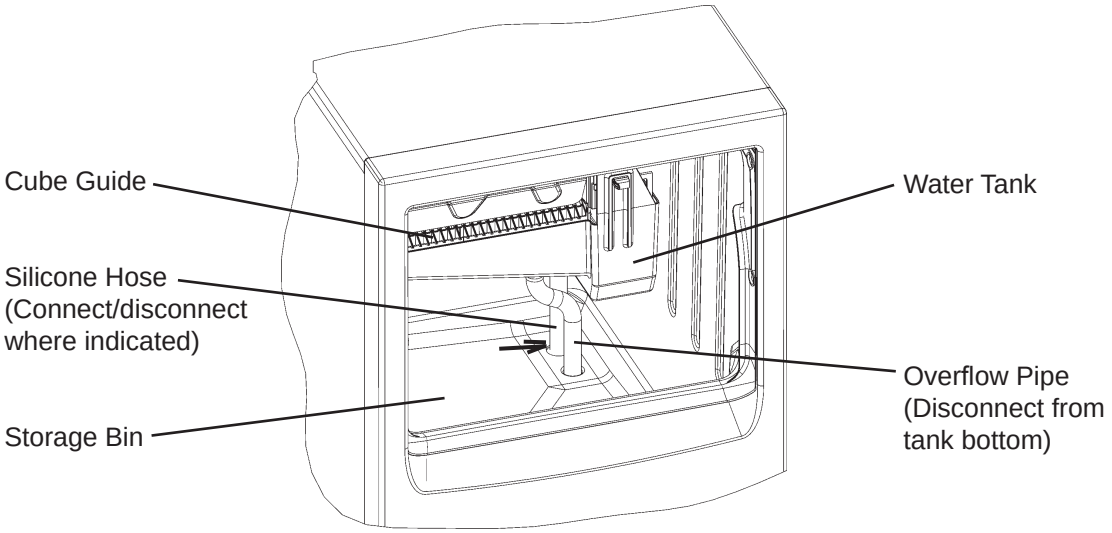

Fig. 15

3) Pinch and push down the snaps on both sides of the bracket to unhook the water tank from the square holes, and pull it about 1” towards you.

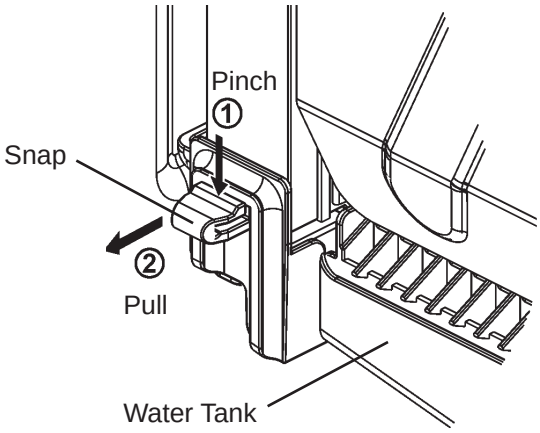

Fig. 16

4) When the snaps are unhooked from the square holes, the rear part of the water tank (dotted circle in Fig. 17) is also unhooked. Hold the water tank with both hands.

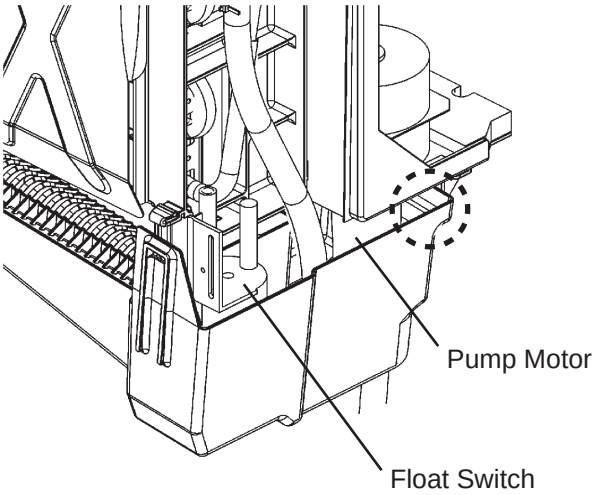

Fig. 17

5) Tilt the right side of the water tank and pull it towards you. Do not hit the pump motor or float switch. Slightly twist the left side of the water tank inward and pull it towards you.

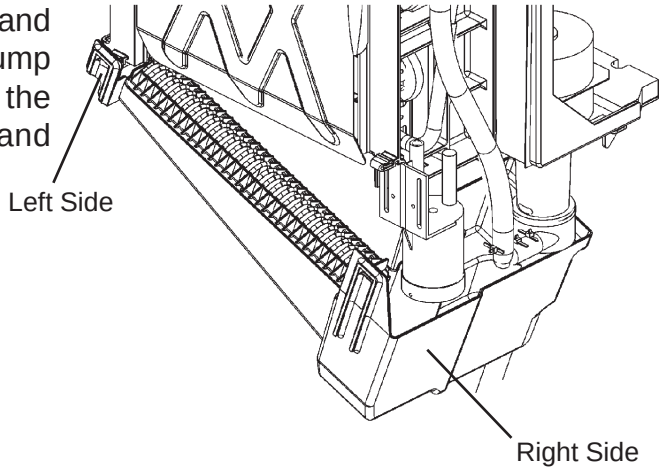

Fig. 18

6) Slide the left side of the water tank to release it from the bracket rail, lower the entire water tank, and pull it towards you out of the storage bin. Do not hit the other components.

7) Replace the water tank in the reverse order of the removal procedure (left, right, top, rear).

8) Plug in the appliance, then move the control switch to the “ICE” position.

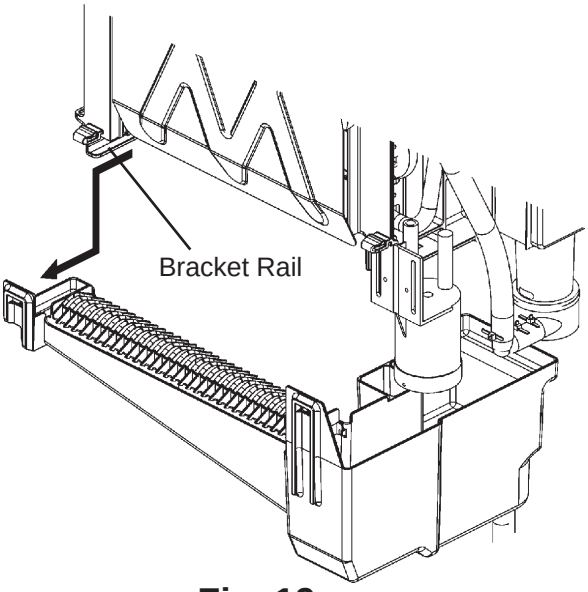

Fig. 19

D. Separator

1) Move the control switch to the “OFF” position, then unplug the appliance.

2) Remove the screws at the rear and take off the top panel.

3) Bend the front separator into a U-shape and remove it from the evaporator bracket shaft. Bend the rear separator into an inverted U-shape and lift it off the evaporator bracket shaft.

4) Replace the separators in the reverse order of the removal procedure. Check that the separators are fit correctly on the bracket shafts and can swing freely.

5) Plug in the appliance, then move the control switch to the “ICE” position.

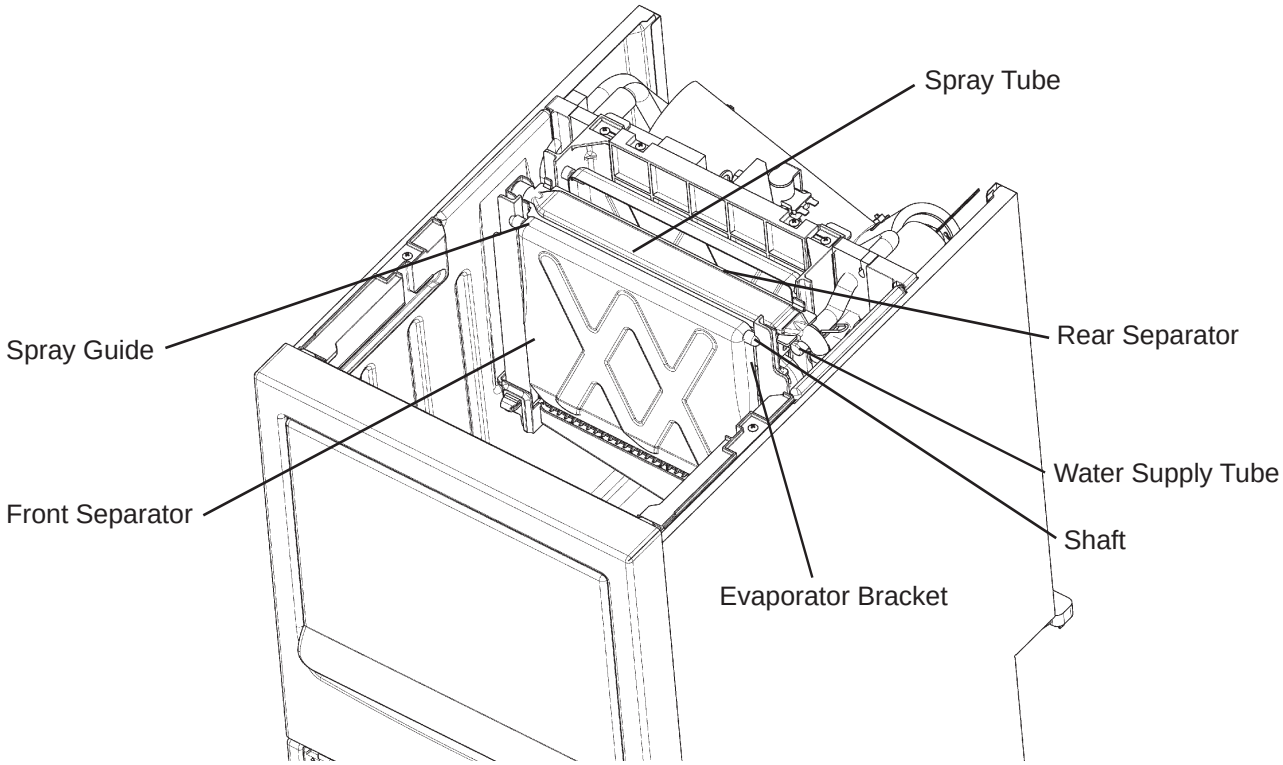

Fig. 20

E. Door

1) Remove the screws at the rear and take off the top panel.

2) Remove the two mounting screws and the brace. See Fig. 21.

3) Move the door so that the door shafts line up with the door channel inlets. Slide up the door to release it from the door channel.

4) Replace the door in the reverse order of the removal procedure. Do not forget to fit the collar on the door shaft, or the door will not open or close smoothly.

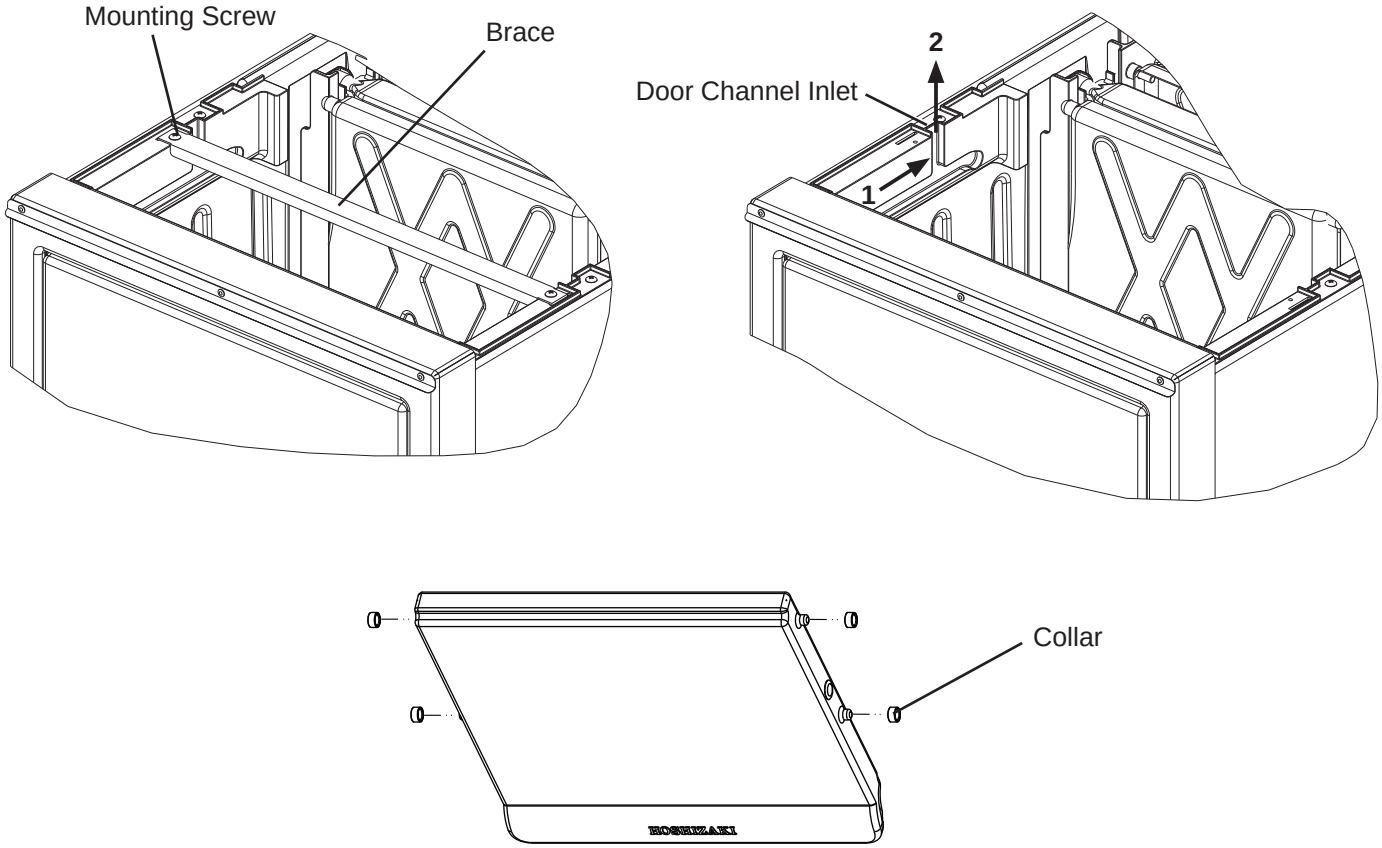

Fig. 21

F. Adjustment of Water Regulating Valve (Water-Cooled Model)

The water regulating valve (also called “water regulator”) is factory-adjusted. No adjustment is required under normal use. Adjust the water regulating valve, if necessary, using the following procedures.

1) Prepare a thermometer to check the condenser drain temperature. Attach a pressure gauge to the high-side line of the system.

2) Five minutes after a freeze cycle starts, confirm that the thermometer reads 104°F to 115°F (40°C to 46°C). If it does not, rotate the adjustment screw by using a flat blade screwdriver until the temperature is in the proper range. See Fig. 22. Next, check that the reference pressure is in the range indicated in the Head Pressure table. See “VIII. B. Performance Data”. If it is not in the proper range, verify the refrigerant charge.

3) Check that the condenser drain temperature is stable.

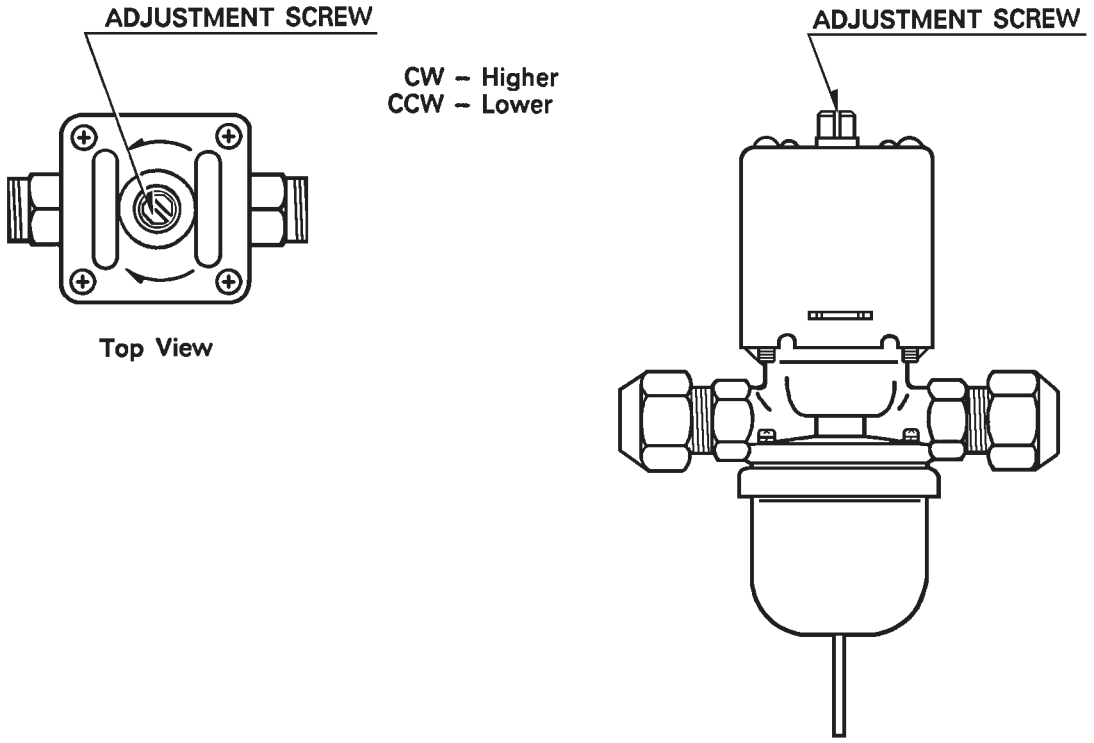

Fig. 22

V. Maintenance

The appliance must be maintained in accordance with the instruction manual and labels provided.

⚠ WARNING

- Only qualified service technicians should service the appliance.
- To reduce the risk of electric shock, do not touch the control switch or plug with damp hands. Make sure the control switch is in the "OFF" position before plugging in or unplugging the appliance.
- Move the control switch to the "OFF" position and unplug the appliance from the electrical outlet before servicing.
- **CHOKING HAZARD:** Ensure all components, fasteners, and thumbscrews are securely in place after any maintenance is done to the appliance. Make sure that none have fallen into the ice storage bin.

A. Maintenance Schedule

The maintenance schedule below is a guideline. More frequent maintenance may be required depending on water quality, the appliance's environment, and local sanitation regulations.

Maintenance Schedule		
Frequency	**Area**	**Task**
Daily	Scoop	Clean the ice scoop using a neutral cleaner. Rinse thoroughly after cleaning.
Bi-Weekly	Air Filter	Inspect. Wash with warm water and neutral cleaner if dirty.
Monthly	External Water Filters	Check for proper pressure and change if necessary.
	Icemaker Exterior	Wipe down with a clean, soft cloth. Use a damp cloth containing a neutral cleaner to wipe off oil or dirt build up. Clean any chlorine staining (rust colored spots) using a non-abrasive cleanser.
Yearly	Icemaker and ice Storage Bin Liner	Clean and sanitize per the cleaning and sanitizing instructions provided in the instruction manual or on the maintenance label on the icemaker.
	Water Supply Inlet	Close the icemaker water supply line shut-off valve and drain the water system. Clean the water supply inlet screen.
	Condenser	Inspect. Clean if necessary by using a brush or vacuum cleaner. More frequent cleaning may be required depending on location.
	Water Hoses	Inspect the water hoses and clean/replace if necessary.

VI. Preparing the Appliance for Periods of Non-Use

NOTICE
• During extended periods of non-use, extended absences, or in sub-freezing temperatures, follow the instructions below to reduce the risk of costly water damage. • To prevent damage to the water pump, do not leave the control switch in the “WASH” position for extended periods of time when the water tank is empty.

During extended periods of non-use, extended absences, or in sub-freezing temperatures, follow the instructions below. When the appliance is not used for two or three days under normal conditions, it is sufficient to move the control switch to the “OFF” position.

1. Remove the water from the icemaker water supply line:

1) Remove the air filter if it has not already been removed.

2) Move the control switch to the “OFF” position.

3) Wait 3 minutes.

4) Close the icemaker water supply line shut-off valve and open the icemaker water supply line drain valve.

5) Allow the line to drain by gravity.

6) Attach compressed air or carbon dioxide supply to the icemaker water supply line drain valve.

7) Move the control switch to the “ICE” position.

8) Quickly blow the icemaker water supply line out using compressed air or carbon dioxide.

2. Drain the water tank:

1) Move the control switch to the “OFF” position.

2) Unplug the appliance from the electrical outlet.

3) Open the door. Disconnect the silicone hose to drain the water. See Fig. 6.

4) Reconnect the silicone hose back in its correct position after all of the water has drained.

5) Remove all ice from the ice storage bin and clean the ice storage bin.

6) Close the door.

7) Replace the air filter in its correct position.

8) Close the icemaker water supply line drain valve.

3. On water-cooled model only, remove the water from the water-cooled condenser:

1) Make sure the control switch is in the “OFF” position and the appliance is unplugged from the electrical outlet.

2) Remove the rear cover.

3) Close the condenser water supply line shut-off valve. If connected to a closed loop system, also close the condenser return line shut-off valve.

4) Open the condenser water supply line drain valve. If connected to a closed loop system, also open the condenser return line drain valve.

5) Attach a compressed air or carbon dioxide supply to the condenser water supply line drain valve.

6) Open the water regulating valve by using a screwdriver to pry up on the spring retainer underneath the spring. While holding the valve open, blow out the condenser using the compressed air or carbon dioxide supply until water stops coming out.

7) Close the condenser water supply line drain valve. If connected to a closed loop system, also close the condenser return line drain valve.

8) Replace the rear cover in its correct position.

VII. Disposal

The appliance contains refrigerant and must be disposed of in accordance with applicable national, state, and local codes and regulations. Refrigerant must be recovered by properly certified service personnel.

VIII. Technical Information

A. Specification Data

1. KM-80BAJ

AC SUPPLY VOLTAGE	115/60/1			
AMPERAGE	3.5 A (5 Min. Freeze AT 104°F / WT 80°F)			
MINIMUM CIRCUIT AMPACITY	15 A			
MAXIMUM FUSE SIZE	15 A			
APPROXIMATE ICE PRODUCTION PER 24 HR. lbs./day (kg/day) Reference without *marks	Ambient Temp.(°F)	WATER TEMP. (°F)		
		50	70	90
	70	*80 (36)	74 (34)	68 (31)
	80	76 (34)	66 (30)	61 (28)
	90	74 (34)	*60 (27)	54 (25)
	100	74 (33)	59 (27)	*49 (22)
SHAPE OF ICE	Crescent Cube			
ICE PRODUCTION PER CYCLE	1.7 lbs. (0.75kg) 80 pcs.			
APPROXIMATE STORAGE CAPACITY	38 lbs. (17kg)			
ELECTRIC & WATER CONSUMPTION	90/70°F		70/50°F	
ELECTRIC W (kWH/100 lbs.)	200(7.95)		200(5.98)	
WATER gal./24HR (gal./100 lbs.)	11(18.2)		16(20.5)	
ENERGY STAR 3.0	YES			
EXTERIOR DIMENSIONS (WxDxH)	17.72" x 24" x 39" (452 x 617 x 990 mm) Including 6" Adjustable legs			
EXTERIOR FINISH	Stainless Steel, Galvanized Steel (Rear)			
WEIGHT	Net 92 lbs. (42 kg), Shipping 123 lbs. (56 kg)			
CONNECTIONS - ELECTRIC	Cord Connection			
- WATER SUPPLY	Inlet	1/2" FPT		
- DRAIN	Outlet	3/4" FPT		
CUBE CONTROL SYSTEM	Float Switch			
HARVESTING CONTROL SYSTEM	Hot Gas and Water, Thermistor and Timer			
ICE MAKING WATER CONTROL	Timer Controlled. Overflow Pipe			
COOLING WATER CONTROL	N/A			
BIN CONTROL SYSTEM	Mechanical Level Switch with Delay			
COMPRESSOR	Hermetic, Model QA51K13GAU6-E0GS			
CONDENSER	Air-Cooled, Fin and tube type			
EVAPORATOR	Vertical type, Stainless Steel and Copper			
REFRIGERANT CONTROL	Capillary Tube			
REFRIGERANT CHARGE	R-134a 7.1oz (200g)			
DESIGN PRESSURE	High 290PSIG, Low 130PSIG			
P.C. BOARD CIRCUIT PROTECTION	High/Low Voltage Cut-out (Internal)			
COMPRESSOR PROTECTION	Auto-reset Overload Protector (Internal)			
REFRIGERANT CIRCUIT PROTECTION	Auto-reset High Pressure Control Switch			
LOW WATER PROTECTION	Float Switch			
ACCESSORIES -SUPPLIED	Ice Scoop, 6" Adjustable Leg(4pcs.)			
-REQUIRED	N/A			
OPERATING CONDITIONS	VOLTAGE RANGE			104 - 127 V
	AMBIENT TEMP.			45 -100° F
	WATER SUPPLY TEMP.			45 - 90° F
	WATER SUPPLY PRESSURE			10 - 113 PSIG
DRAWING NO. (DIMENSION)	N/A			

2. KM-115BAJ

AC SUPPLY VOLTAGE	115/60/1
AMPERAGE	5.5 A (5 Min. Freeze AT 104°F / WT 80°F)
MINIMUM CIRCUIT AMPACITY	15 A
MAXIMUM FUSE SIZE	15 A

APPROXIMATE ICE PRODUCTION PER 24 HR.
lbs./day (kg/day)
Reference without *marks

Ambient Temp.(°F)	WATER TEMP. (°F) 50	70	90
70	*116 (53)	112 (51)	103 (47)
80	113 (51)	106 (48)	96 (44)
90	112 (51)	*102 (46)	92 (42)
100	109 (49)	100 (45)	*83 (38)

SHAPE OF ICE	Crescent Cube	
ICE PRODUCTION PER CYCLE	2.31 lbs. (1.05kg) 110 pcs.	
APPROXIMATE STORAGE CAPACITY	53 lbs. (24kg)	
ELECTRIC & WATER CONSUMPTION	90/70°F	70/50°F
ELECTRIC W (kWH/100 lbs.)	340(8.10)	290(6.07)
WATER gal./24HR (gal./100 lbs.)	21(20.6)	27(23.2)
ENERGY STAR 3.0	YES	
EXTERIOR DIMENSIONS (WxDxH)	23.74" x 24" x 39" (605 x 617 x 990 mm) Including 6" Adjustable legs	
EXTERIOR FINISH	Stainless Steel, Galvanized Steel (Rear)	
WEIGHT	Net 106 lbs. (48 kg), Shipping 146 lbs. (66 kg)	
CONNECTIONS - ELECTRIC	Cord Connection	
- WATER SUPPLY	Inlet	1/2" FPT
- DRAIN	Outlet	3/4" FPT
CUBE CONTROL SYSTEM	Float Switch	
HARVESTING CONTROL SYSTEM	Hot Gas and Water, Thermistor and Timer	
ICE MAKING WATER CONTROL	Timer Controlled. Overflow Pipe	
COOLING WATER CONTROL	N/A	
BIN CONTROL SYSTEM	Mechanical Level Switch with Delay	
COMPRESSOR	Hermetic, Model QA91K22CAU6-E0GS	
CONDENSER	Air-Cooled, Fin and tube type	
EVAPORATOR	Vertical type, Stainless Steel and Copper	
REFRIGERANT CONTROL	Capillary Tube	
REFRIGERANT CHARGE	R-134a 7.8oz (220g)	
DESIGN PRESSURE	High 290PSIG, Low 130PSIG	
P.C. BOARD CIRCUIT PROTECTION	High/Low Voltage Cut-out (Internal)	
COMPRESSOR PROTECTION	Auto-reset Overload Protector (Internal)	
REFRIGERANT CIRCUIT PROTECTION	Auto-reset High Pressure Control Switch	
LOW WATER PROTECTION	Float Switch	
ACCESSORIES -SUPPLIED	Ice Scoop, 6" Adjustable Leg(4pcs.)	
-REQUIRED	N/A	
OPERATING CONDITIONS	VOLTAGE RANGE	104 - 127 V
	AMBIENT TEMP.	45 -100° F
	WATER SUPPLY TEMP.	45 - 90° F
	WATER SUPPLY PRESSURE	10 - 113 PSIG
DRAWING NO. (DIMENSION)	N/A	

3. KM-160BAJ

AC SUPPLY VOLTAGE	115/60/1
AMPERAGE	7.1 A (5 Min. Freeze AT 104°F / WT 80°F)
MINIMUM CIRCUIT AMPACITY	15 A
MAXIMUM FUSE SIZE	15 A

APPROXIMATE ICE PRODUCTION PER 24 HR.
lbs./day (kg/day)
Reference without *marks

Ambient Temp.(°F)	WATER TEMP. (°F) 50	70	90
70	*162 (73)	153 (69)	143 (65)
80	155 (70)	140 (64)	132 (60)
90	153 (69)	*130 (59)	121 (55)
100	152 (69)	128 (58)	*112 (51)

SHAPE OF ICE	Crescent Cube
ICE PRODUCTION PER CYCLE	2.75 lbs. (1.25kg) 130 pcs.
APPROXIMATE STORAGE CAPACITY	78 lbs. (36kg)

ELECTRIC & WATER CONSUMPTION	90/70°F	70/50°F
ELECTRIC W (kWH/100 lbs.)	450(8.27)	390(5.72)
WATER gal./24HR (gal./100 lbs.)	30(22.7)	45(27.8)

ENERGY STAR 3.0	No
EXTERIOR DIMENSIONS (WxDxH)	23.74" x 28" x 39" (605 x 719 x 990 mm) Including 6" Adjustable legs
EXTERIOR FINISH	Stainless Steel, Galvanized Steel (Rear)
WEIGHT	Net 117 lbs. (53 kg), Shipping 159 lbs. (72 kg)
CONNECTIONS - ELECTRIC	Cord Connection
- WATER SUPPLY	Inlet 1/2" FPT
- DRAIN	Outlet 3/4" FPT
CUBE CONTROL SYSTEM	Float Switch
HARVESTING CONTROL SYSTEM	Hot Gas and Water, Thermistor and Timer
ICE MAKING WATER CONTROL	Timer Controlled. Overflow Pipe
COOLING WATER CONTROL	N/A
BIN CONTROL SYSTEM	Mechanical Level Switch with Delay
COMPRESSOR	Hermetic, Model QA125K29CAU6-E0GS
CONDENSER	Air-Cooled, Fin and tube type
EVAPORATOR	Vertical type, Stainless Steel and Copper
REFRIGERANT CONTROL	Thermostatic Expansion Valve
REFRIGERANT CHARGE	R-134a 7.4oz (210g)
DESIGN PRESSURE	High 290PSIG, Low 130PSIG
P.C. BOARD CIRCUIT PROTECTION	High/Low Voltage Cut-out (Internal)
COMPRESSOR PROTECTION	Auto-reset Overload Protector (Internal)
REFRIGERANT CIRCUIT PROTECTION	Auto-reset High Pressure Control Switch
LOW WATER PROTECTION	Float Switch
ACCESSORIES -SUPPLIED	Ice Scoop, 6" Adjustable Leg(4pcs.)
-REQUIRED	N/A

OPERATING CONDITIONS		
	VOLTAGE RANGE	104 - 127 V
	AMBIENT TEMP.	45 -100° F
	WATER SUPPLY TEMP.	45 - 90° F
	WATER SUPPLY PRESSURE	10 - 113 PSIG

DRAWING NO. (DIMENSION)	N/A

4. KM-160BWJ

AC SUPPLY VOLTAGE	115/60/1
AMPERAGE	6.4 A (5 Min. Freeze AT 104°F / WT 80°F)
MINIMUM CIRCUIT AMPACITY	15 A
MAXIMUM FUSE SIZE	15 A

APPROXIMATE ICE PRODUCTION PER 24 HR.
lbs./day (kg/day)
Reference without *marks

Ambient Temp.(°F)	WATER TEMP. (°F) 50	70	90
70	*157 (71)	154 (70)	143 (65)
80	155 (70)	150 (68)	135 (61)
90	154 (70)	*147 (67)	133 (61)
100	149 (68)	144 (65)	*121 (55)

SHAPE OF ICE	Crescent Cube
ICE PRODUCTION PER CYCLE	2.75 lbs. (1.25kg) 130 pcs.
APPROXIMATE STORAGE CAPACITY	78 lbs. (36kg)

ELECTRIC & WATER CONSUMPTION	90/70°F	70/50°F
ELECTRIC W (kWH/100 lbs.)	380(6.23)	350(5.30)
POT. WATER gal./24HR (gal./100 lbs.)	35(23.9)	49(31.0)
COND. WATER gal./24HR (gal./100 lbs.)	237(161.5)	82(52.0)

ENERGY STAR 3.0	N/A	
EXTERIOR DIMENSIONS (WxDxH)	23.74" x 28" x 39" (605 x 719 x 990 mm) Including 6" Adjustable legs	
EXTERIOR FINISH	Stainless Steel, Galvanized Steel (Rear)	
WEIGHT	Net 121 lbs. (55 kg), Shipping 163 lbs. (74 kg)	
CONNECTIONS - ELECTRIC	Cord Connection	
- WATER SUPPLY	Inlet	1/2" FPT
- DRAIN	Outlet	3/4" FPT
CONDENSER WATER	Inlet	1/2" FPT
	Outlet	1/2" FPT
CUBE CONTROL SYSTEM	Float Switch	
HARVESTING CONTROL SYSTEM	Hot Gas and Water, Thermistor and Timer	
ICE MAKING WATER CONTROL	Timer Controlled. Overflow Pipe	
COOLING WATER CONTROL	Pressure Regulator	
BIN CONTROL SYSTEM	Mechanical Level Switch with Delay	
COMPRESSOR	Hermetic, Model NEK6187Z-268AG71M9AJ	
CONDENSER	Water-Cooled, Tube type	
EVAPORATOR	Vertical type, Stainless Steel and Copper	
REFRIGERANT CONTROL	Thermostatic Expansion Valve	
REFRIGERANT CHARGE	R-134a 10.6oz (300g)	
DESIGN PRESSURE	High 290PSIG, Low 130PSIG	
P.C. BOARD CIRCUIT PROTECTION	High/Low Voltage Cut-out (Internal)	
COMPRESSOR PROTECTION	Auto-reset Overload Protector (Internal)	
REFRIGERANT CIRCUIT PROTECTION	Auto-reset High Pressure Control Switch	
LOW WATER PROTECTION	Float Switch	
ACCESSORIES -SUPPLIED	Ice Scoop, 6" Adjustable Leg(4pcs.)	
-REQUIRED	N/A	
OPERATING CONDITIONS	VOLTAGE RANGE	104 - 127 V
	AMBIENT TEMP.	45 -100° F
	WATER SUPPLY TEMP.	45 - 90° F
	WATER SUPPLY PRESSURE	10 - 113 PSIG
DRAWING NO. (DIMENSION)	N/A	

B. Performance Data

1. KM-80BAJ

APPROXIMATE ICE PRODUCTION PER 24 HR.	AMBIENT TEMP. (ºF/ºC)	WATER TEMP. (ºF/ºC)					
		50/10		70/21		90/32	
	70/21	**80**	36	74	34	68	31
	80/27	76	34	66	30	61	28
	90/32	74	34	**60**	27	54	25
lbs./day kg./day	100/38	74	33	59	27	**49**	22
APPROXIMATE ELECTRIC CONSUMPTION	70/21	**200**		200		212	
	80/27	200		200		218	
	90/32	200		**200**		216	
watts	100/38	206		204		**230**	
APPROXIMATE WATER CONSUMPTION PER 24 HR.	70/21	**16**	0.06	15	0.06	14	0.05
	80/27	15	0.06	13	0.05	13	0.05
	90/32	15	0.06	**11**	0.04	11	0.04
gal./day m^3/day	100/38	13	0.05	11	0.04	**10**	0.04
FREEZING CYCLE TIME	70/21	**25**		28		33	
	80/27	27		31		37	
	90/32	28		**34**		40	
min.	100/38	29		35		**45**	
HARVEST CYCLE TIME	70/21	**2.1**		2.1		2.0	
	80/27	2.1		2.0		2.0	
	90/32	2.1		**2.0**		2.0	
min.	100/38	2.0		2.0		**2.0**	
HEAD PRESSURE	70/21	**102**	7.2	114	8.0	138	9.7
	80/27	111	7.8	131	9.2	158	11.1
	90/32	114	8.0	**144**	10.1	170	12.0
PSIG kg/cm^2G	100/38	121	8.5	150	10.6	**194**	13.6
SUCTION PRESSURE	70/21	**15**	1.1	17	1.2	25	1.8
	80/27	17	1.2	20	1.4	31	2.2
	90/32	17	1.2	**22**	1.5	32	2.3
PSIG kg/cm^2G	100/38	21	1.5	24	1.7	**42**	3.0

TOTAL HEAT OF REJECTION FROM CONDENSER	1,350 BTU/h [AT 90ºF (32ºC) / WT 70ºF (21ºC)]
TOTAL HEAT OF REJECTION FROM COMPRESSOR	250 BTU/h [AT 90ºF (32ºC) / WT 70ºF (21ºC)]

Note: Pressure data is recorded at 5 minutes into freezing cycle.

2. KM-115BAJ

	AMBIENT TEMP. (ºF/ºC)	WATER TEMP. (ºF/ºC)					
		50/10		70/21		90/32	
APPROXIMATE ICE PRODUCTION PER 24 HR.	70/21	**116**	53	112	51	103	47
	80/27	113	51	106	48	96	44
	90/32	112	51	**102**	46	92	42
lbs./day kg./day	100/38	109	49	100	45	**83**	38
APPROXIMATE ELECTRIC CONSUMPTION	70/21	**290**		305		321	
	80/27	301		324		338	
	90/32	305		**340**		356	
watts	100/38	307		344		**370**	
APPROXIMATE WATER CONSUMPTION PER 24 HR.	70/21	**27**	0.10	25	0.10	23	0.09
	80/27	26	0.10	23	0.09	21	0.08
	90/32	25	0.10	**21**	0.08	19	0.07
gal./day m^3/day	100/38	23	0.09	21	0.08	**17**	0.06
FREEZING CYCLE TIME	70/21	**23**		25		28	
	80/27	25		28		30	
	90/32	25		**30**		33	
min.	100/38	26		31		**35**	
HARVEST CYCLE TIME	70/21	**2.3**		2.2		2.0	
	80/27	2.2		2.1		2.0	
	90/32	2.2		**2.0**		2.0	
min.	100/38	2.1		2.0		**2.0**	
HEAD PRESSURE	70/21	**112**	7.9	128	9.0	148	10.4
	80/27	125	8.8	150	10.5	168	11.8
	90/32	128	9.0	**168**	11.8	187	13.2
PSIG kg/cm^2G	100/38	131	9.2	173	12.1	**205**	14.4
SUCTION PRESSURE	70/21	**12**	0.8	14	1.0	17	1.2
	80/27	14	1.0	17	1.2	20	1.4
	90/32	14	1.0	**19**	1.3	22	1.6
PSIG kg/cm^2G	100/38	15	1.0	20	1.4	**25**	1.8

TOTAL HEAT OF REJECTION FROM CONDENSER	2,100 BTU/h	[AT 90ºF (32ºC) / WT 70ºF (21ºC)]
TOTAL HEAT OF REJECTION FROM COMPRESSOR	380 BTU/h	[AT 90ºF (32ºC) / WT 70ºF (21ºC)]

Note: Pressure data is recorded at 5 minutes into freezing cycle.

3. KM-160BAJ

APPROXIMATE ICE PRODUCTION PER 24 HR.	AMBIENT TEMP. (ºF/ºC)	WATER TEMP. (ºF/ºC)					
		50/10		70/21		90/32	
	70/21	**162**	73	153	69	143	65
	80/27	155	70	140	64	132	60
	90/32	153	69	**130**	59	121	55
lbs./day kg./day	100/38	152	69	128	58	**112**	51
APPROXIMATE ELECTRIC CONSUMPTION	70/21	**390**		408		429	
	80/27	403		431		450	
	90/32	408		**450**		471	
watts	100/38	411		455		**490**	
APPROXIMATE WATER CONSUMPTION PER 24 HR.	70/21	**45**	0.17	40	0.15	38	0.14
	80/27	42	0.16	35	0.13	34	0.13
	90/32	40	0.15	**30**	0.11	28	0.11
gal./day m^3/day	100/38	35	0.13	29	0.11	**27**	0.10
FREEZING CYCLE TIME	70/21	**19**		20		23	
	80/27	20		22		25	
	90/32	20		**24**		27	
min.	100/38	21		25		**29**	
HARVEST CYCLE TIME	70/21	**2.3**		2.2		2.0	
	80/27	2.2		2.1		2.0	
	90/32	2.2		**2.0**		2.0	
min.	100/38	2.1		2.0		**2.0**	
HEAD PRESSURE	70/21	**122**	8.6	137	9.6	153	10.8
	80/27	133	9.4	157	11.0	171	12.0
	90/32	137	9.6	**173**	12.2	189	13.3
PSIG kg/cm^2G	100/38	139	9.8	177	12.4	**203**	14.3
SUCTION PRESSURE	70/21	**11**	0.8	12	0.9	13	0.9
	80/27	12	0.8	14	1.0	15	1.0
	90/32	12	0.9	**15**	1.1	16	1.1
PSIG kg/cm^2G	100/38	12	0.9	15	1.1	**17**	1.2

TOTAL HEAT OF REJECTION FROM CONDENSER	3,050 BTU/h [AT 90ºF (32ºC) / WT 70ºF (21ºC)]
TOTAL HEAT OF REJECTION FROM COMPRESSOR	530 BTU/h [AT 90ºF (32ºC) / WT 70ºF (21ºC)]

Note: Pressure data is recorded at 5 minutes into freezing cycle.

4. KM-160BWJ

APPROXIMATE ICE PRODUCTION PER 24 HR.	AMBIENT TEMP. (ºF/ºC)	WATER TEMP. (ºF/ºC)					
		50/10		70/21		90/32	
	70/21	**157**	71	154	70	143	65
	80/27	155	70	150	68	135	61
	90/32	154	70	**147**	67	133	61
lbs./day kg./day	100/38	149	68	144	65	**121**	55
APPROXIMATE ELECTRIC CONSUMPTION	70/21	**350**		359		354	
	80/27	357		370		356	
	90/32	359		**380**		370	
watts	100/38	352		378		**360**	
APPROXIMATE WATER CONSUMPTION PER 24 HR.	70/21	**130**	0.49	172	0.65	365	1.38
	80/27	162	0.61	227	0.86	496	1.88
	90/32	172	0.65	**273**	1.03	513	1.94
gal./day m^3/day	100/38	293	1.11	329	1.25	**735**	2.78
FREEZING CYCLE TIME	70/21	**20**		21		23	
	80/27	21		23		25	
	90/32	21		**24**		26	
min.	100/38	22		24		**28**	
HARVEST CYCLE TIME	70/21	**2.5**		2.4		2.0	
	80/27	2.4		2.2		2.0	
	90/32	2.4		**2.0**		2.0	
min.	100/38	2.2		2.0		**2.0**	
HEAD PRESSURE	70/21	**137**	9.6	137	9.7	139	9.8
	80/27	137	9.6	138	9.7	140	9.8
	90/32	137	9.7	**138**	9.7	140	9.8
PSIG kg/cm^2G	100/38	138	9.7	138	9.7	**142**	10.0
SUCTION PRESSURE	70/21	**13**	0.9	14	1.0	14	1.0
	80/27	14	1.0	15	1.1	15	1.0
	90/32	14	1.0	**16**	1.1	16	1.1
PSIG kg/cm^2G	100/38	14	1.0	16	1.1	**16**	1.1

TOTAL HEAT OF REJECTION FROM CONDENSER	2,900 BTU/h [AT 90ºF (32ºC) / WT 70ºF (21ºC)]
TOTAL HEAT OF REJECTION FROM COMPRESSOR	450 BTU/h [AT 90ºF (32ºC) / WT 70ºF (21ºC)]

Note: Pressure data is recorded at 5 minutes into freezing cycle.

C. Wiring Diagram

1. KM-80BAJ

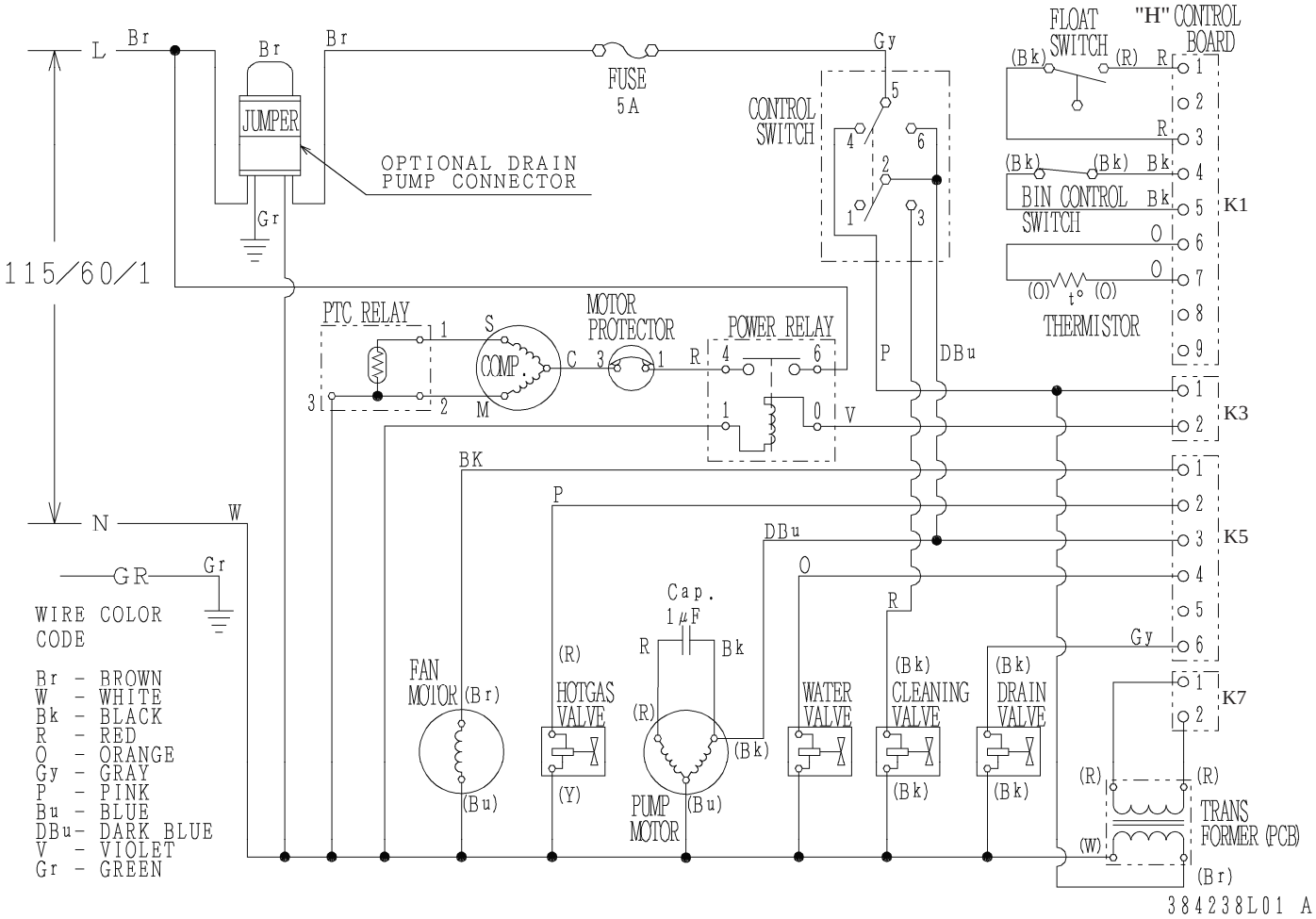

2. KM-115BAJ

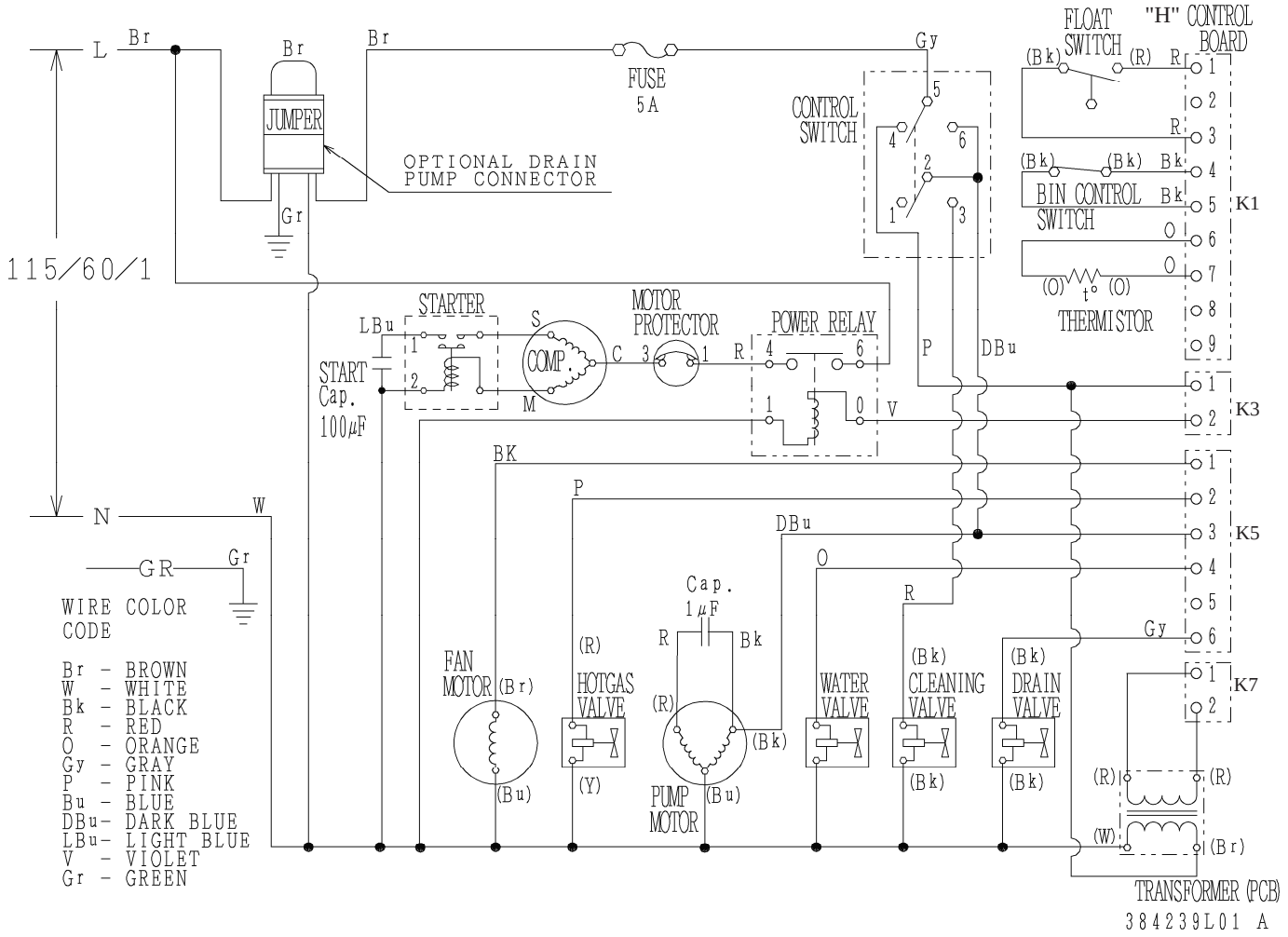
L
Br
JUMPER
OPTIONAL DRAIN PUMP CONNECTOR
Gr
115/60/1
FUSE 5A
Gy
CONTROL SWITCH
FLOAT SWITCH
"H" CONTROL BOARD
BIN CONTROL SWITCH
THERMISTOR
K1
K3
K5
K7
STARTER
START Cap. 100μF
COMP.
MOTOR PROTECTOR
POWER RELAY
N
W
GR
WIRE COLOR CODE
Br - BROWN
W - WHITE
Bk - BLACK
R - RED
O - ORANGE
Gy - GRAY
P - PINK
Bu - BLUE
DBu- DARK BLUE
LBu- LIGHT BLUE
V - VIOLET
Gr - GREEN
FAN MOTOR
HOTGAS VALVE
Cap. 1μF
PUMP MOTOR
WATER VALVE
CLEANING VALVE
DRAIN VALVE
TRANSFORMER (PCB)
384239L01 A
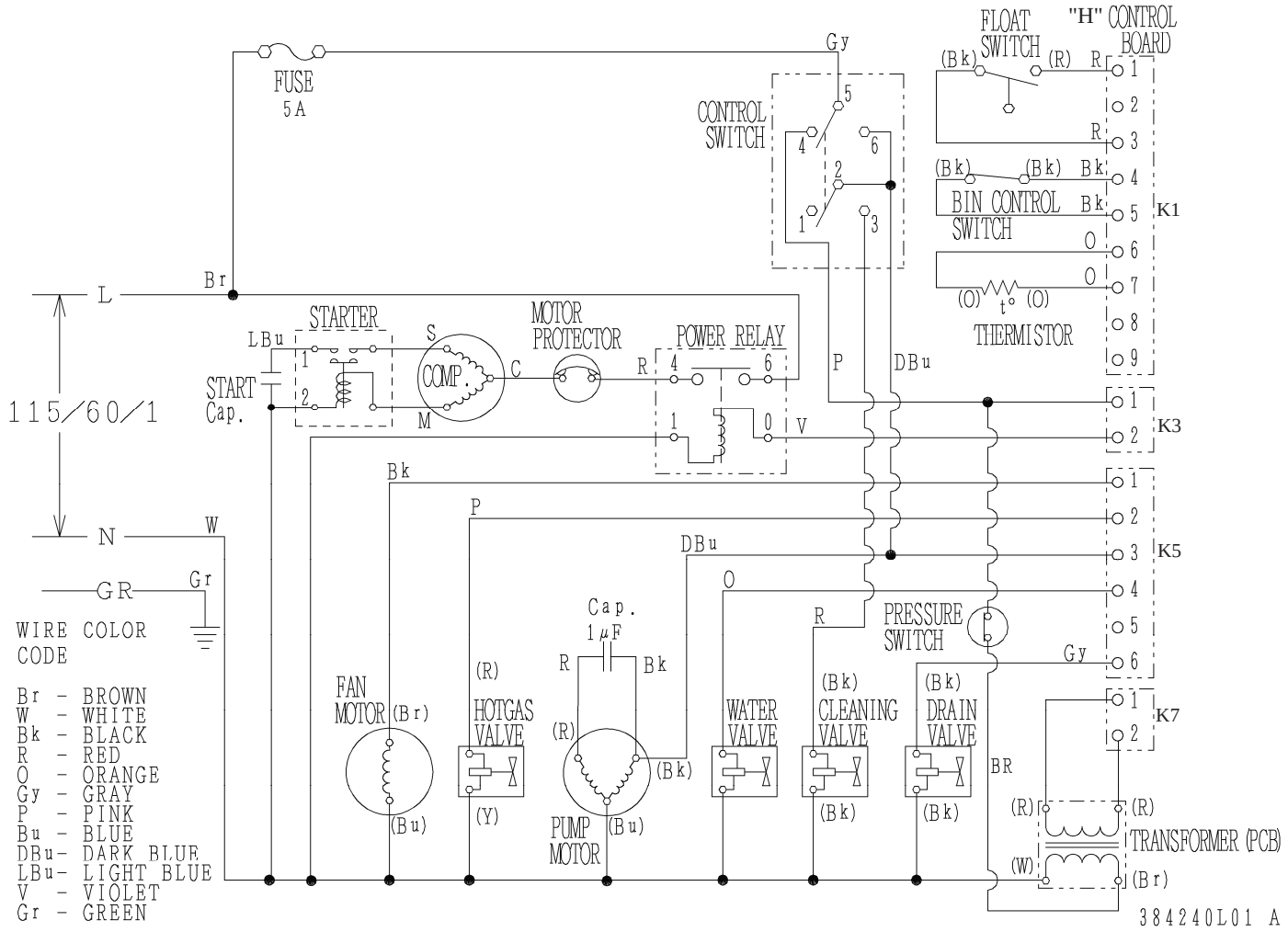
3. KM-160BAJ, KM-160BWJ