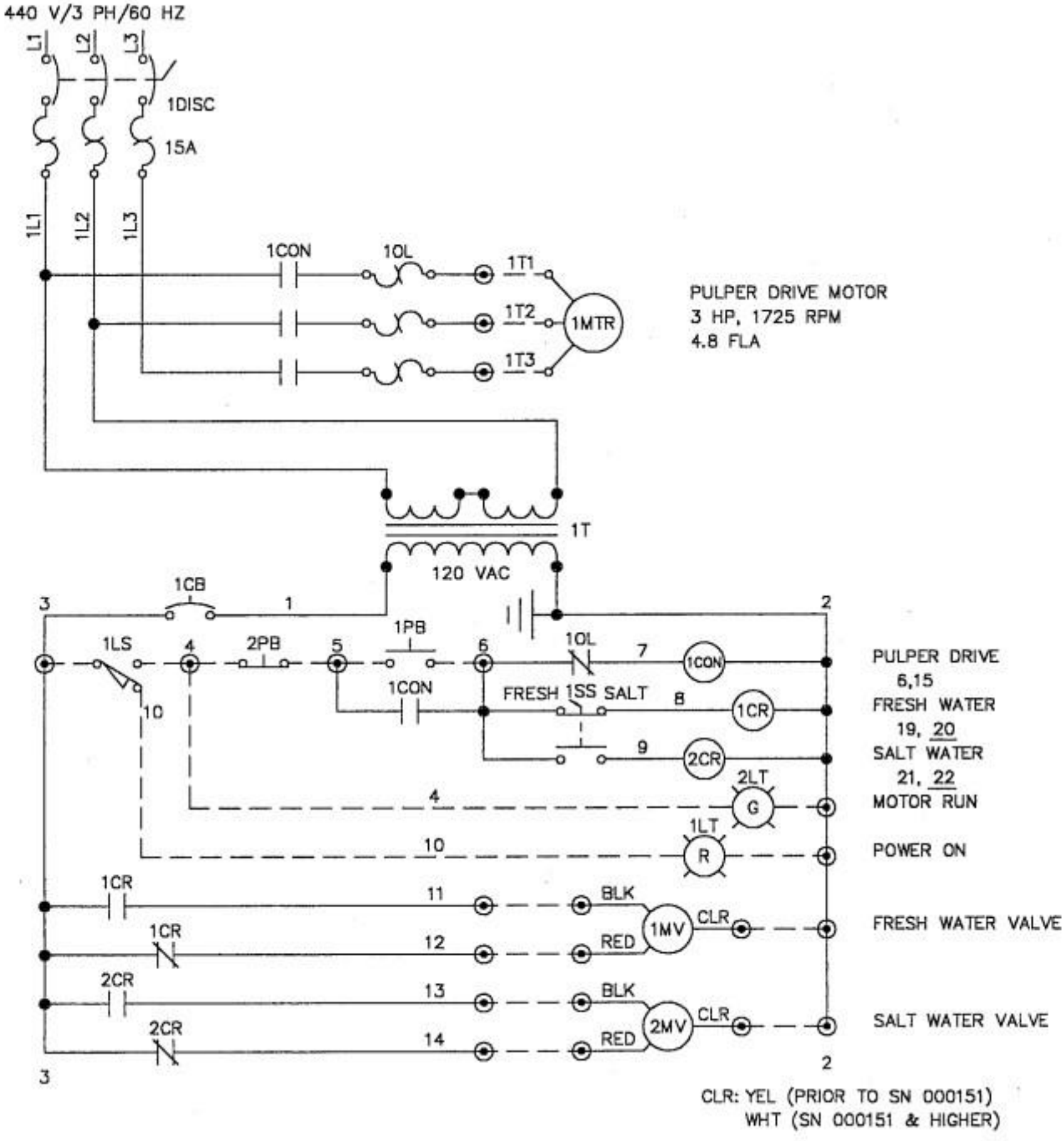
440 V/3 PH/60 HZ
L1
L2
L3
1DISC
15A
1L1
1L2
1L3
1CON
1OL
1T1
1T2
1T3
1MTR
PULPER DRIVE MOTOR
3 HP, 1725 RPM
4.8 FLA
1T
120 VAC
1CB
3
1
2
1LS
4
2PB
5
1PB
6
1OL
7
1CON
PULPER DRIVE
6,15
1CON
FRESH 1SS SALT
8
1CR
FRESH WATER
19, 20
10
9
2CR
SALT WATER
21, 22
2LT
4
G
MOTOR RUN
1LT
10
R
POWER ON
1CR
11
BLK
1MV
CLR
FRESH WATER VALVE
1CR
12
RED
2CR
13
BLK
2MV
CLR
SALT WATER VALVE
2CR
14
RED
3
2
CLR: YEL (PRIOR TO SN 000151)
WHT (SN 000151 & HIGHER)