CENTURY

Technical Manual

Century (14’) | Century (17’)

Insinger
Machine Company

Thank you for Purchasing this quality Insinger product.

On the space provided please record the Model and Serial Number of this unit:

Model: _____

Serial Number: _____

When referring to this equipment please have these numbers available.

Each piece of equipment at Insinger is carefully tested before shipment for proper operation. If the need for service should arise please contact your local Authorized Insinger Service Company. A Service Network Listing is provided within this manual. Check this list for your local authorized servicer.

For proper activation of the *Insinger Limited Warranty* a SureFire™ Start-up should be completed on your machine. Refer to the Introduction section in this manual for an explanation of Insinger's SureFire™ Start-up and Check-out Program.

Please read the Insinger Limited Warranty and all installation and operation instructions carefully before attempting to install or operate your new Insinger product.

To register your machine for warranty by phone, fax, or the internet or for answers to questions concerning installation, operation, or service contact our Technical Services Department:

Toll-Free	800.344.4802
Fax	215.624.6966
Email	service@insingermachine.com
World-Wide Web	http://www.insingermachine.com

Thank you.
Insinger Machine Company

S:\WP51\MANUAL\INTRO

Insinger
Machine Company

FLIGHT TYPE DISHMACHINES
Century 14 & Defender Series
Table of Contents

PART 1 - TECHNICAL INFORMATION

* Introduction
* Catalogue Cut-sheet and Installation Drawing
* Warranty

PART 2 - INSTALLATION AND OPERATION INSTRUCTIONS

* Section A, Installation Instructions
* Section B, Operation and Cleaning Instructions

PART 3 - MAINTENANCE AND REPAIR PROCEDURES

* Section A, Maintenance and Repair Procedures
* Basic Service Guide

PART 4 - ELECTRICAL SCHEMATICS AND REPLACEMENT PARTS

* Machine Wiring Diagrams
* Control Panel Layout and Component Drawing
* Electric Blower Dryer Wiring Diagram
* Electric Blower Dryer Control Panel Layout & Control Panel Layout
* Electric Booster Wiring Diagram

PART 5 - REPLACEMENT PARTS

Model: Century 14

* Overall Assembly Drawing
* Track Installation Assembly's
* Baffle & Scrap Screen Assembly's
* Driven Shaft Assembly
* Curtain & Baffle Installation Assembly's
* Discharge Line Assembly's
* Final Rinse Assembly
* Auto Tank Fill Assembly
* Conveyor Drive Assembly
* Drain Assembly's
* Pump Assembly
* Pump Suction Assembly
* Liquid Level Float Typical Installation
* Start/Stop Station Assembly
* Rack Section Details
* Photoelectric Eye Installation

rlsd: 4/97
s:\wp51\manual\mnlcenturydefender

Insinger
Machine Company

FLIGHT TYPE DISHMACHINES
Century 14 & Defender Series
Table of Contents

PART 5 - REPLACEMENT PARTS, CONT'D

Model: Defender series

* Overall Assembly Drawing
* Track Installation Assembly's
* Baffle & Scrap Screen Assembly's
* Curtain & Baffle Installation Assembly's
* Discharge Line Assembly's
* Final Rinse Assembly
* Auto Tank Fill Assembly
* Cold Water Thermostat/Load Flush Piping
* Conveyor Drive Assembly
* Conveyor Overload Shutoff Assembly
* Driven Shaft Assembly
* Drive Shaft Assembly
* Stop Bar Assembly & Location
* Drain Assembly's
* Pump Assembly
* Liquid Level Float Typical Installation
* Steam Piping (injectors & coils)
* Rack Section Details
* Photoelectric Eye Installation
* Accessory Locations
* Assembly - Hood Top Light, mechanical connections

CENTURY 14 & DEFENDER SERIES
TECH MANUAL INTRODUCTION
Part 1, Section A

A. INTRODUCTION

A.1 Purpose

The purpose of this Tech Manual is to provide installation, operation, cleaning and maintenance directions. A section is provided for replacement parts.

A.2 Scope

This manual contains all pertinent information to assist in the proper installation, operation, cleaning, maintenance, and parts ordering for the Century 14 and Defender Series dishwashers. The installation instructions are intended for qualified equipment installers. The operation and cleaning instructions are intended for the daily users of the equipment. The maintenance and parts sections are intended for qualified service and/or maintenance technicians.

Replacement parts may be ordered directly from our factory or from your local Insinger Authorized Service Agency. For the name of your local Insinger Authorized Service Agency please reference the Service Network Listing in Section 1 of this manual. You can also speak to the Insinger Technical Services Department, 800/344-4802, or e-mail us at service@insingermachine.com. When calling for warranty information or replacement parts please provide the model and serial number of your Insinger equipment. These important numbers should be noted in this manual on the spaces provided on the opening page.

A.3 Start-Up Program

Insinger is proud to offer our exclusive Surefire™ Start-up & Check-out Program to our commercial customers. This service is included in the purchase price of your new Insinger dishwasher. We will provide an authorized factory service technician for the initial start-up of your new Insinger dishwasher to ensure it is running correctly. Please call the factory or your local Insinger Sales Representative to schedule this service.

A.4 Definitions

Throughout this guide you will find the following terms: WARNING, CAUTION, & NOTE. When used, these terms will be outlined in a box to draw attention:

WARNING indicates potential physical danger.

CAUTION indicates potential equipment damage.

NOTE indicates helpful operating hints or tips.

Insinger
Machine Company

PART 1

TECHNICAL INFORMATION

Project_____
Item_____
Quantity_____
CSI - 11400_____
Approval_____
Date_____

ESSENTIAL SERIES

CENTURY
Three Tank Rackless Conveyor Dishwasher

- Automatic conveyor, flight type three tank dishwasher with recirculating prewash, wash and rinse; and fresh water final rinse.
- 228 gallons/hour final rinse consumption
- Capacity is 8,725 dishes per hour
- Conveyor speed of 7 feet per minute
- CrossFire® Wash System provides superior cleaning
- Error proof replacement with color-coded curtains
- Designed for left or right hand conveyor travel, as specified

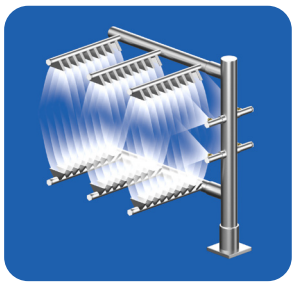

The patented CrossFire® Wash System power sprays water horizontally, as well as, from above and below, cleaning and sanitizing the dirtiest of ware.

STANDARD FEATURES

- CrossFire® Wash System
- SureFire® Start-Up & Check-Out Service
- Tank heat: 50.0 kW electric immersion heaters or steam injectors
- Capillary thermometers for pre-wash, wash, rinse and final rinse
- Final rinse pressure gauge
- Vacuum breaker on all incoming water lines
- Manifold clean-out brush
- Inspection and clean-out doors
- S/S frame, legs and feet
- S/S front enclosure panel
- Automatic tank fill
- Low water protection
- Detergent connection provision
- Top mounted NEMA 12 control panel
- Simplified scrap screen design
- Door safety switch
- Standard frame drip proof motors
- Polypropylene belt with removable rack sections
- Conveyor reversing switch
- Conveyor switch for de-liming
- Interior work lights
- Override switch for de-liming
- End caps/pipe plugs secured to prevent loss
- Color-coded curtains

OPTIONS

- ☐ Stainless steel steam coil tank heat
- ☐ Steam booster
- ☐ Electric booster
- ☐ Pressure reduction valve and line strainer
- ☐ Single point electrical connection: motors, controls and heaters.
- ☐ S/S panels on all sides
- ☐ Security package
- ☐ Totally enclosed motors
- ☐ Insulated hood and door
- ☐ Stainless steel belt with removable rack sections

6245 State Road · Philadelphia, PA 19135 · PH: 800-344-4802 · FX: 215-624-6966 · www.insingermachine.com

CENTURY
Three Tank Rackless Conveyor Dishwasher

Capacity Per Hour	8736 dishes 600-1300 meals
Tank Capacity	13 gals. (pre-wash) 25 gals. (wash) 26 gals. (rinse)
Motor Size	1/2 hp (pre-wash) 2 hp (wash) 2 hp (rinse) 1/2 hp (conveyor)
Electric Usage	20.0 kW wash tank 30.0 kW rinse tank *24.0 kW booster 40° rise *45.0 kW booster 70° rise
Steam Consumption at 20 psi min.	182 lbs./hour tank 81 lbs./hour booster 40° rise 142 lbs./hour booster 70° rise
Final Rinse Peak Flow at 20 psi min.	3.8 gallons/minute
Final Rinse Consumption at 20 psi min.	228 gallons/hour
Exhaust Hood Requirement	500 CFM Load 1000 CFM unload
Peak Rate Drain Flow	23 gallons/minute
Shipping Weight	2500 lbs.

Machine Electrical		
Motors, Controls Tank Heat	Steam	Electric
208/3/60	21.0	160.0
240/3/60	19.0	139.6
480/3/60	9.5	69.5
380/3/50	11.5	87.5

Contact Insinger Sales at 800-344-4802 for an installation drawing specific to your application. This drawing is available on the Insinger webstie at www.insingermachine.com

Note: Due to product improvement we reserve the right to change information and specifications without notice.

SPECIFICATIONS

CONSTRUCTION- Hood and tank all welded seamless construction using 16 gauge 18-8 type 304 S/S. S/S frame, legs and feet. All internal castings are non-corrosive nickel alloy, bronze or S/S.

DOORS- Three extra large die formed 18-8 type 304 S/S front inspection doors riding in all S/S channels. A triple ply leading edge on the door channels made of S/S with no plastic or nylon sleeves or liners used. Two intermediate S/S door-safety stops on each door.

CONVEYORS- Removable polypropylene or S/S rack section on S/S belt with polyethylene rollers. Conveyor drive system includes large speed reducer with cut gears operating in oil bath and frictionless, trouble-free overload release system. Conveyor transports dishware automatically through all washing and rinsing systems and is driven by an independent 1/2 hp motor. A trip bar at the end of the unload section stops the conveyor if any ware reaches the bar. A reversing switch is provided to assist in removing jams in the belt.

PUMPS- Centrifugal type “packless” pump with a brass petcock drains. Construction includes ceramic seal and a balanced cast impeller on a precision ground stainless steel shaft, extension or sleeve. All working parts mounted as an assembly and removable as a unit without disturbing pump housing. Two 2 hp motors wash and rinse and 1/2 hp pre-wash, all standard horizontal C-face frame, drip-proof, internally cooled with ball-bearing construction.

CONTROLS- Top mounted control cabinet, NEMA 12 rated with heat insulation provided between hood and control cabinet, housing motor controls and overload protection, transformer, contactors and all dishwasher integral controls. All controls safe low voltage 24 VAC.

ENERGY SAVER- Electric photo eye automatically operates the final rinse solenoid only when ware passes, saving water and energy. The photo eye also activates an adjustable timer control. If no ware passes during the set time, the machine shuts down.

SPRAY SYSTEM- Spray arms made of type 304 stainless steel pipe. Spray assemblies removable without the use of tools.

PRE-WASH- Upper and lower manifolds. One manifold above with 3 power pre-wash nozzles, one manifold below with 3 power pre-wash nozzles.

WASH- Upper and lower manifolds with the patented CrossFire® Wash System. Each manifold has 3 upper and 4 lower power wash arms designed with pressure action cleansing slots. The slots are precision milled for water control producing a fan spray. Wash arms are fillet welded to the S/S manifold. The CrossFire system provides 2 horizontally spraying high pressure nozzles.

RINSE- Upper and lower manifolds. Each manifold has 3 upper and 4 lower power rinse arms designed with pressure action fan spray reducing water consumption, maximizing heat retention.

FINAL RINSE- Eight nozzle assemblies above and four nozzles below threaded into S/S schedule 40 pipes. Nozzle assemblies produce a fan spray reducing water consumption, maximizing heat retention.

DRAIN- Drain valve externally controlled. Overflow assembly with skimmer cap is removable without the use of tools for drain line inspection. Heater is protected by low water level control.

INSTALLATION AND LAYOUT DETAIL

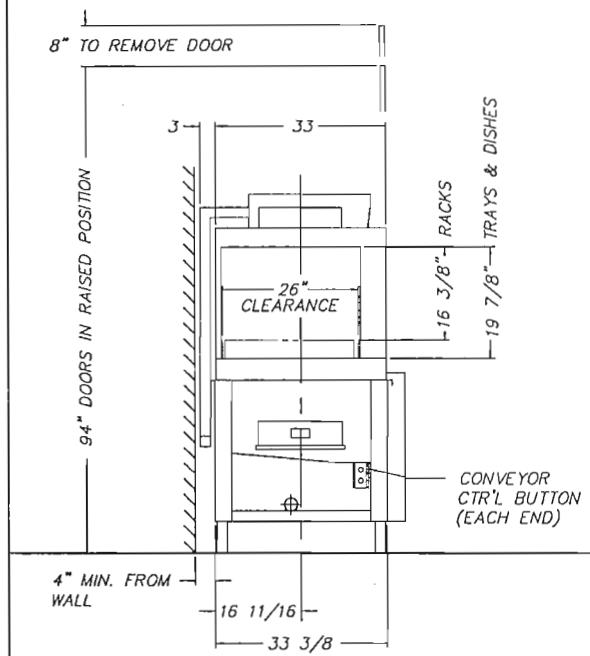

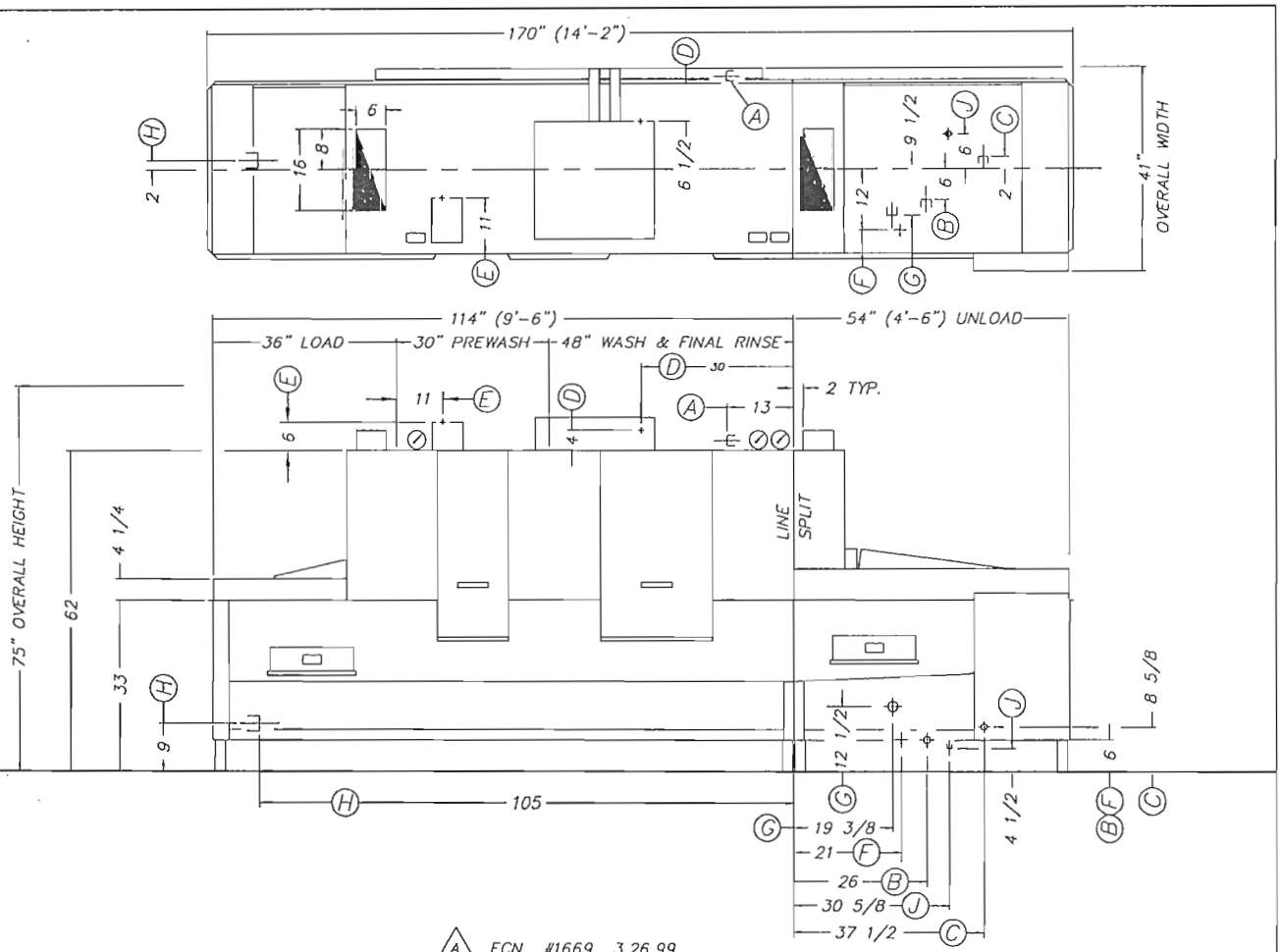

FILE: STD/DEF14L

	INSTALLATION CONNECTIONS	
LTR	DESCRIPTION	SIZE
A	HOT WATER TO AUTO FILL-140° F	3/4 FIPS
B	HOT WATER TO ELECTRIC BOOSTER * ●	3/4 FIPS
C	HOT WATER TO STEAM BOOSTER ●	3/4 FIPS
D	ELECTRICAL CONNECTION - COMMON	40 KW & 5 1/2 HP
E	ELECTRICAL CONNECTION - LIGHTS	120 V
F	ELECTRICAL CONNECTION - BOOSTER *	27/45 KW
G	STEAM TO BOOSTER AND TANKS	1 1/2 FIPS
H	DRAIN CONNECTION - COMMON	2" FIPS
J	CONDENSATE RETURN - COMMON	3/4 FIPS

A ECN #1669 3.26.99

LEFT TO RIGHT FEED

NOTES:

1. "●" HOT WATER TO BOOSTER 140° F STD/ 110° F SPECIAL
2. (2) 6" X 16" VENTS WITH ADJUSTABLE DAMPERS

DEFENDER 14

AUTOMATIC CONTINUOUS CONVEYOR TYPE DISHWASHING MACHINE

INSINGER MACHINE COMPANY
6245 State Rd.
Philadelphia
PA 19135-2996
Tel. 215-624-4800
FAX: 215-624-6966

SCALE:	1/2" = 1'-0"	DWG. NO.	
DRAWN:	EMM 3.4.97	DEFENDER	A
APPROVED:	EBA 3.4.97		

INSTALLATION AND LAYOUT DETAIL

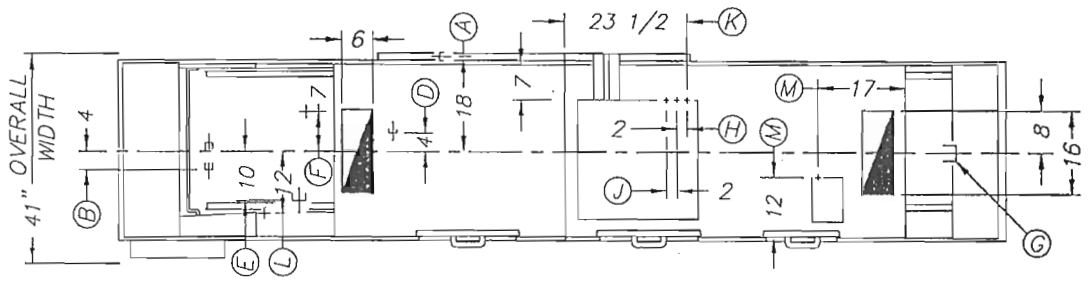

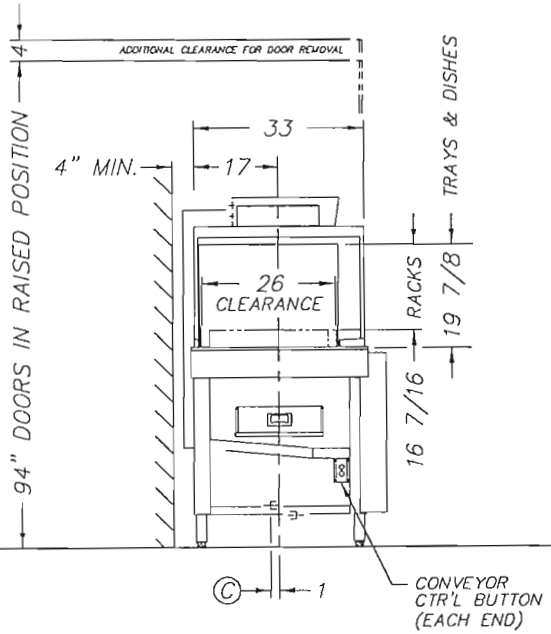

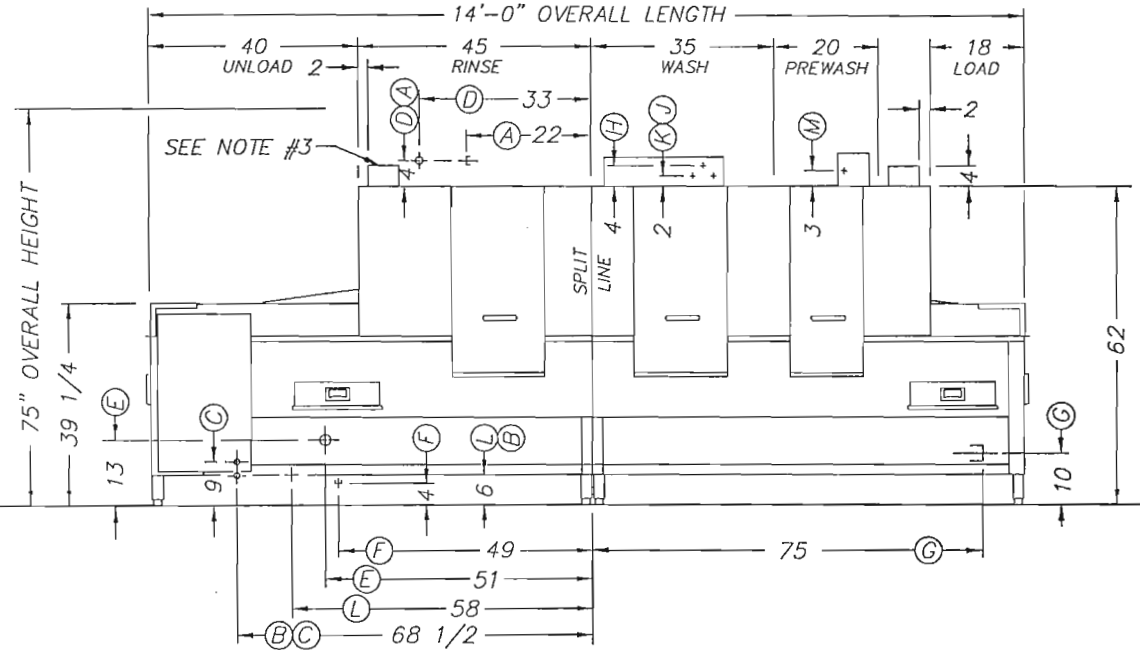

RIGHT TO LEFT FEED

INSTALLATION CONNECTIONS		
LTR	DESCRIPTION	SIZE
A	HOT WATER TO AUTO FILL – 140° F	3/4 FIPS
B	HOT WATER TO ELECTRIC BOOSTER *●	3/4 FIPS
C	HOT WATER TO STEAM BOOSTER ●	3/4 FIPS
D	HOT WATER TO FINAL RINSE – 180° F	3/4 FIPS
E	STEAM TO BOOSTER AND TANKS	2 FIPS
F	CONDENSATE RETURN – COMMON	3/4 FIPS
G	DRAIN CONNECTION – COMMON	2 FIPS
H	ELECT. SERVICE – WASH HTRS.*	20 KW
J	ELECT. SERVICE – RINSE HTRS.*	30 KW
K	ELECT. SERVICE – WASHER MTRS.	5 HP
L	ELECT. SERVICE – BOOSTER*	24/45 KW
M	ELECT. SERVICE – LIGHTS	120V

NOTES:

1. " * " = FOR ELECTRICALLY HEATED MACHINES ONLY.
2. " ● " HOT WATER TO BOOSTER 140° F STD/ 110° F SPECIAL.
3. (2) 6" x 16" VENTS WITH ADJUSTABLE DAMPERS.

CENTURY 14
AUTOMATIC CONTINUOUS CONVEYOR TYPE DISHWASHING MACHINE

Insinger
Philadelphia, PA 19135
(215) 624-4800
FAX (215) 624-6966

DRWN: MAM 7.28.93	SCALE	DWG. NO.	REV
REV: EMM 10.27.00	1/2" = 1'	CENT-RH	J
FILE: STD/CENT-RH			

INSTALLATION AND LAYOUT DETAIL

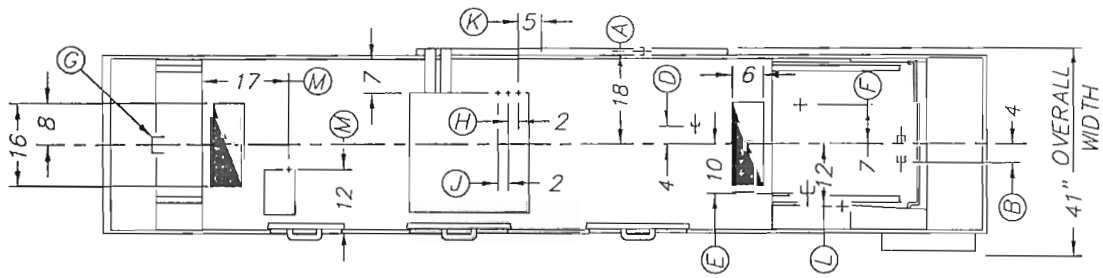

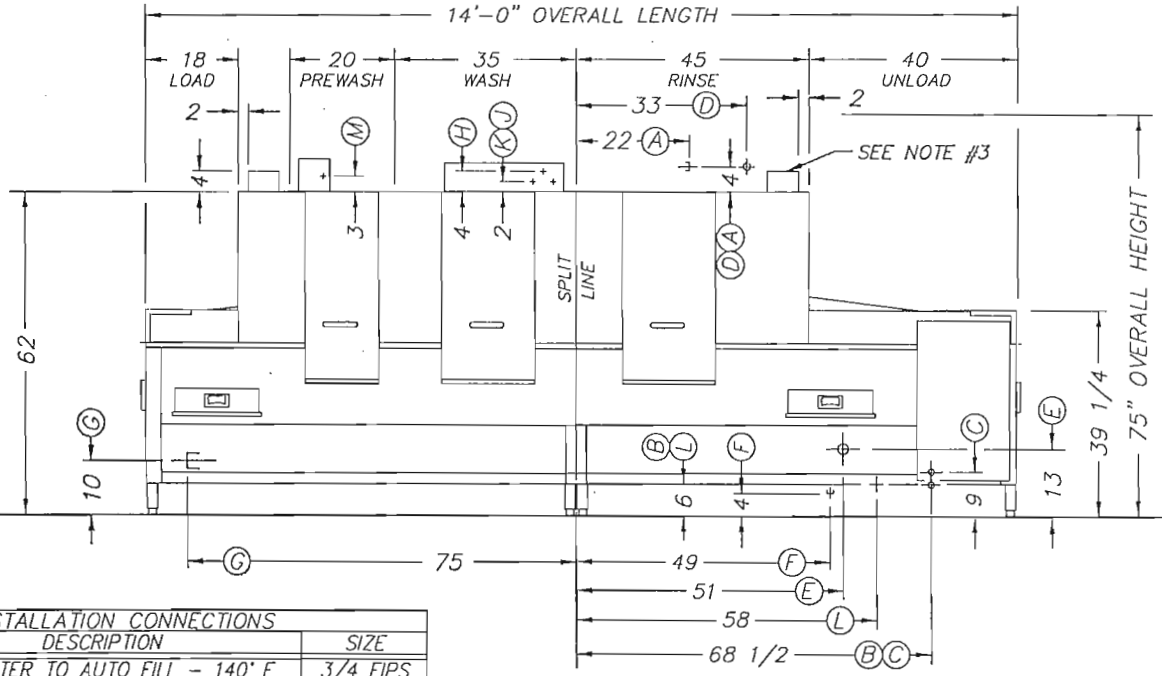

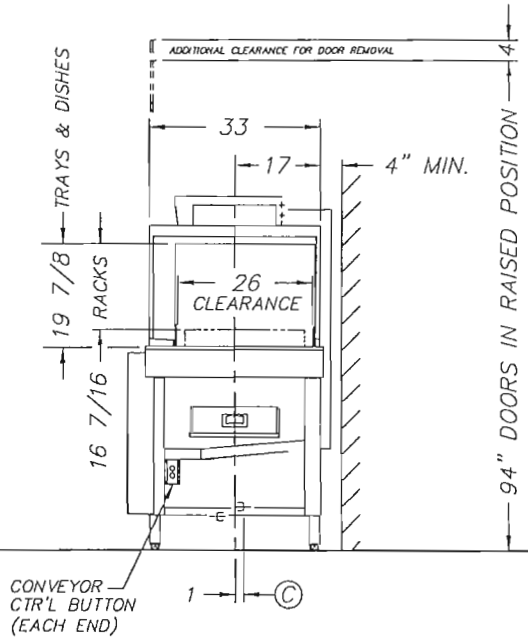

LEFT TO RIGHT FEED

INSTALLATION CONNECTIONS		
LTR	DESCRIPTION	SIZE
A	HOT WATER TO AUTO FILL - 140° F	3/4 FIPS
B	HOT WATER TO ELECTRIC BOOSTER * ●	3/4 FIPS
C	HOT WATER TO STEAM BOOSTER ●	3/4 FIPS
D	HOT WATER TO FINAL RINSE - 180° F	3/4 FIPS
E	STEAM TO BOOSTER AND TANKS	2 FIPS
F	CONDENSATE RETURN - COMMON	3/4 FIPS
G	DRAIN CONNECTIONS	2 FIPS
H	ELECT. SERVICE - WASH HTRS. *	20 KW
J	ELECT. SERVICE - RINSE HTRS. *	30 KW
K	ELECT. SERVICE - WASHER MTRS.	5 HP
L	ELECT. SERVICE - BOOSTER *	24/45 KW
M	ELECT. SERVICE - LIGHTS	120V

NOTES:

1. " * " = FOR ELECTRICALLY HEATED MACHINES ONLY.
2. " ● " HOT WATER TO BOOSTER 140° F STD/ 110° F SPECIAL.
3. (2) 6" x 16" VENTS WITH ADJUSTABLE DAMPERS.

CENTURY 14

AUTOMATIC CONTINUOUS CONVEYOR TYPE DISHWASHING MACHINE

Insinger
Philadelphia, PA 19135
(215) 624-4800
FAX (215) 624-6966

DRWN: MAM 7.28.93	SCALE	DWG. NO.	REV
REV: EMM 10.27.00	1/2" = 1'	CENT-LH	J
FILE: STD/CENT-LH			

Project_____
Item_____
Quantity_____
CSI - 11400_____
Approval_____
Date_____

ESSENTIAL SERIES

DEFENDER
Double Tank Rackless Conveyor Dishwasher

- Automatic conveyor, flight type two tank dishwasher with recirculating prewash and wash zones; and fresh water final rinse.
- 306 gallons hour final rinse consumption
- Capacity is 8,861 dishes per hour
- Conveyor speed of 7.1 feet per minute
- CrossFire® Wash System provides superior cleaning
- Error proof replacement with color-coded curtains
- Designed for left or right hand conveyor travel, as specified

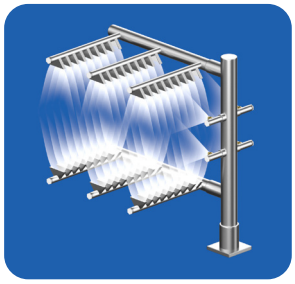

The patented CrossFire® Wash System power sprays water horizontally, as well as, from above and below, cleaning and sanitizing the dirtiest of ware.

STANDARD FEATURES

- CrossFire® Wash System
- SureFire® Start-Up & Check-Out Service
- Tank heat: 40.0 kW electric immersion heaters or steam injectors
- Capillary thermometers for pre-wash, wash, rinse and final rinse
- Final rinse pressure gauge
- Vacuum breaker on all incoming water lines
- Manifold clean-out brush
- Inspection and clean-out doors
- S/S frame, legs and feet
- S/S front enclosure panel
- Automatic tank fill
- Low water protection
- Detergent connection provision
- Top mounted NEMA 12 control panel
- Simplified scrap screen design
- Door safety switch
- Standard frame drip proof motors
- Single point electrical connection: motors, controls and heaters
- Polypropylene belt with removable rack sections
- Conveyor reversing switch
- Conveyor switch for de-liming
- Interior work lights
- Override switch for de-liming
- End caps/pipe plugs secured to prevent loss
- Color-coded curtains

OPTIONS

- ☐ Stainless steel steam coil tank heat
- ☐ Steam booster
- ☐ Electric booster
- ☐ Pressure reduction valve and line strainer
- ☐ Single point electrical connection: motors, controls and heaters
- ☐ S/S panels on all sides
- ☐ Security package
- ☐ Totally enclosed motors
- ☐ Insulated hood and door
- ☐ Stainless steel belt with removable rack sections

6245 State Road · Philadelphia, PA 19135 · PH: 800-344-4802 · FX: 215-624-6966 · www.insingermachine.com

DEFENDER
Double Tank Rackless Conveyor Dishwasher

Capacity Per Hour	8861 dishes 600-1000 meals
Tank Capacity	20 gals. (pre-wash) 39 gals. (wash)
Motor Size	2 hp (pre-wash) 3 hp (wash) 1/2 hp (conveyor)
Electric Usage	40.0 kW wash tank *36.0 kW booster 40° rise *54.0 kW booster 70° rise
Steam Consumption at 20 psi min.	145 lbs./hour tank 109 lbs./hour booster 40° rise 190 lbs./hour booster 70° rise
Final Rinse Peak Flow at 20 psi min.	5.1 gallons/minute
Final Rinse Consumption at 20 psi min.	306 gallons/hour
Exhaust Hood Requirement	500 CFM Load 1000 CFM unload
Peak Rate Drain Flow	15 gallons/minute
Shipping Weight	2500 lbs.

Machine Electrical		
Motors, Controls Tank Heat	Steam	Electric
208/3/60	21.5	137.5
240/3/60	19.5	120.0
480/3/60	9.7	60.0
380/3/50	11.8	72.6

*Booster requires separate electrical connection

Contact Insinger Sales at 800-344-4802 for an installation drawing specific to your application. This drawing is available on the Insinger webstie at www.insingermachine.com

Note: Due to product improvement we reserve the right to change information and specifications without notice.

SPECIFICATIONS

CONSTRUCTION- Hood and tank all welded seamless construction using 16 gauge 18-8 type 304 S/S. S/S frame, legs and feet. All internal castings are non-corrosive nickel alloy, bronze or S/S.

DOORS- Three extra large die formed 18-8 type 304 S/S front inspection doors riding in all S/S channels. A triple ply leading edge on the door channels made of S/S with no plastic or nylon sleeves or liners used. Two intermediate S/S door-safety stops on each door.

CONVEYORS- Removable polypropylene or S/S rack section on S/S belt with polyethylene rollers. Conveyor drive system includes large speed reducer with cut gears operating in oil bath and frictionless, trouble-free overload release system. Conveyor transports dishware automatically through all washing and rinsing systems and is driven by an independent 1/2 hp motor. A trip bar at the end of the unload section stops the conveyor if any ware reaches the bar. A reversing switch is provided to assist in removing jams in the belt.

PUMPS- Centrifugal type “packless” pump with a brass petcock drains. Construction includes ceramic seal and a balanced cast impeller on a precision ground stainless steel shaft, extension or sleeve. All working parts mounted as an assembly and removable as a unit without disturbing pump housing. Two 2 hp motors wash and rinse and 1/2 hp pre-wash, all standard horizontal C-face frame, drip-proof, internally cooled with ball-bearing construction.

CONTROLS- Top mounted control cabinet, NEMA 12 rated with heat insulation provided between hood and control cabinet, housing motor controls and overload protection, transformer, contactors and all dishwasher integral controls. All controls safe low voltage 24 VAC.

ENERGY SAVER- Electric photo eye automatically operates the final rinse solenoid only when ware passes, saving water and energy. The photo eye also activates an adjustable timer control. If no ware passes during the set time, the machine shuts down.

SPRAY SYSTEM- Spray arms made of type 304 stainless steel pipe. Spray assemblies removable without the use of tools.

PRE-WASH- Upper and lower manifolds. One manifold above with 3 power pre-wash nozzles, one manifold below with 3 power pre-wash nozzles.

WASH- Upper and lower manifolds with the patented CrossFire® Wash System. Each manifold has 3 upper and 4 lower power wash arms designed with pressure action cleansing slots. The slots are precision milled for water control producing a fan spray. Wash arms are fillet welded to the S/S manifold. The CrossFire system provides 2 horizontally spraying high pressure nozzles.

RINSE- Upper and lower manifolds. Each manifold has 3 upper and 4 lower power rinse arms designed with pressure action fan spray reducing water consumption, maximizing heat retention.

FINAL RINSE- Eight nozzle assemblies above and four nozzles below threaded into S/S schedule 40 pipes. Nozzle assemblies produce a fan spray reducing water consumption, maximizing heat retention.

DRAIN- Drain valve externally controlled. Overflow assembly with skimmer cap is removable without the use of tools for drain line inspection. Heater is protected by low water level control.

INSTALLATION AND LAYOUT DETAIL

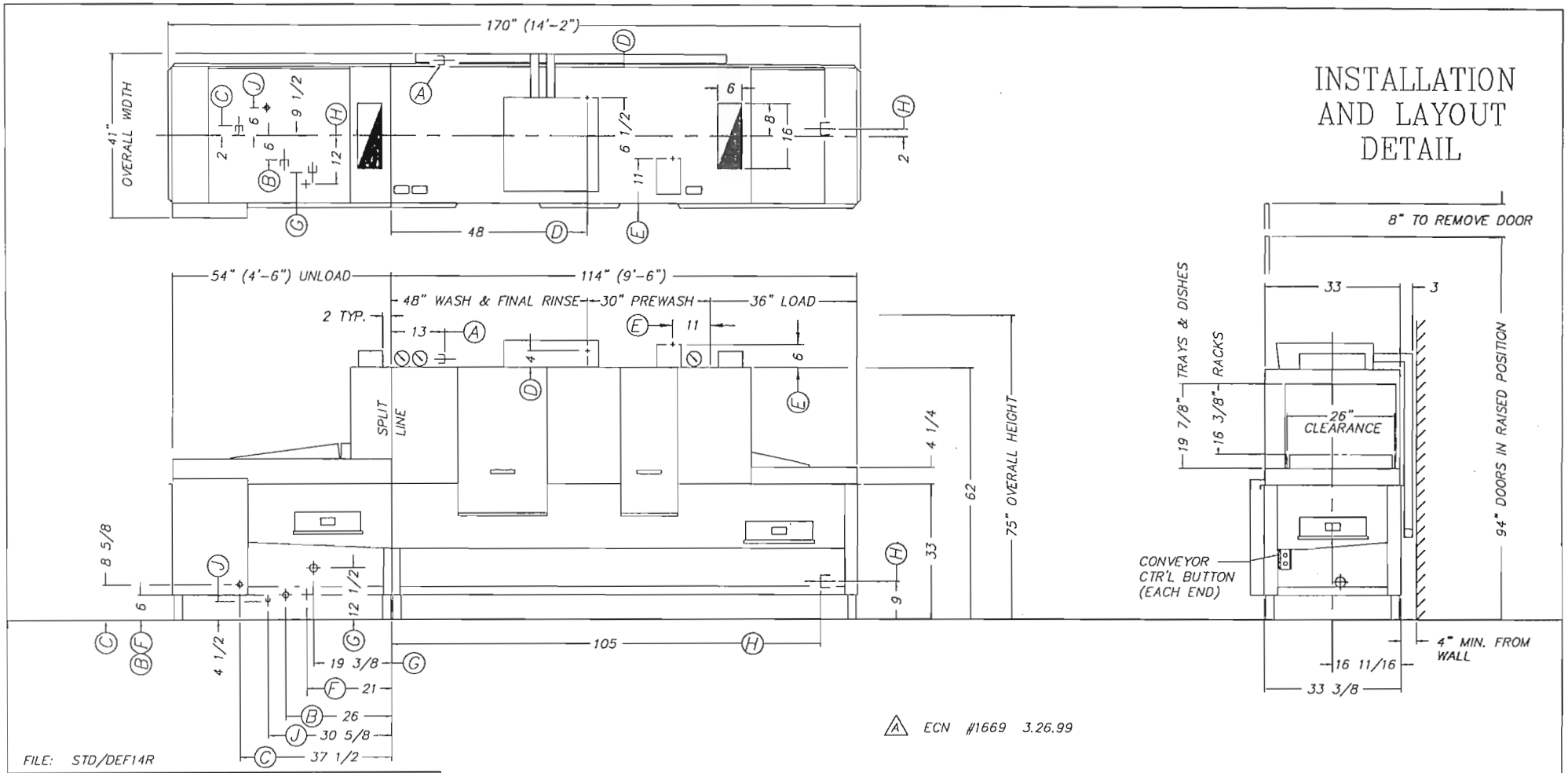

FILE: STD/DEF14R

INSTALLATION CONNECTIONS		
LTR	DESCRIPTION	SIZE
A	HOT WATER TO AUTO FILL-140° F	3/4 FIPS
B	HOT WATER TO ELECTRIC BOOSTER * ●	3/4 FIPS
C	HOT WATER TO STEAM BOOSTER ●	3/4 FIPS
D	ELECTRICAL CONNECTION - COMMON	40 KW & 5 1/2 HP
E	ELECTRICAL CONNECTION - LIGHTS	120 V
F	ELECTRICAL CONNECTION - BOOSTER *	27/45 KW
G	STEAM TO BOOSTER AND TANKS	1 1/2 FIPS
H	DRAIN CONNECTION - COMMON	2" FIPS
J	CONDENSATE RETURN - COMMON	3/4 FIPS

A ECN #1669 3.26.99

RIGHT TO LEFT FEED

NOTES:

1. "●" HOT WATER TO BOOSTER 140° F STD/ 110° F SPECIAL
2. (2) 6" X 16" VENTS WITH ADJUSTABLE DAMPERS

DEFENDER 14

AUTOMATIC CONTINUOUS CONVEYOR TYPE DISHWASHING MACHINE

INSINGER MACHINE COMPANY
6245 State Rd. Philadelphia PA 19135-2996
Tel. 215-624-4800
FAX: 215-624-6966

SCALE:	1/2" = 1'-0"	DWG. NO.	
DRAWN:	EMM 3.4.97	DEFENDER	A
APPROVED:	EBA 3.4.97		

INSTALLATION AND LAYOUT DETAIL

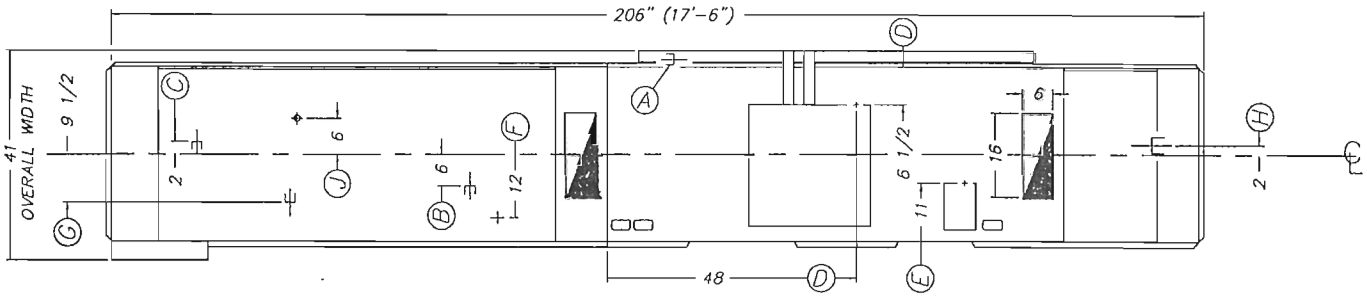

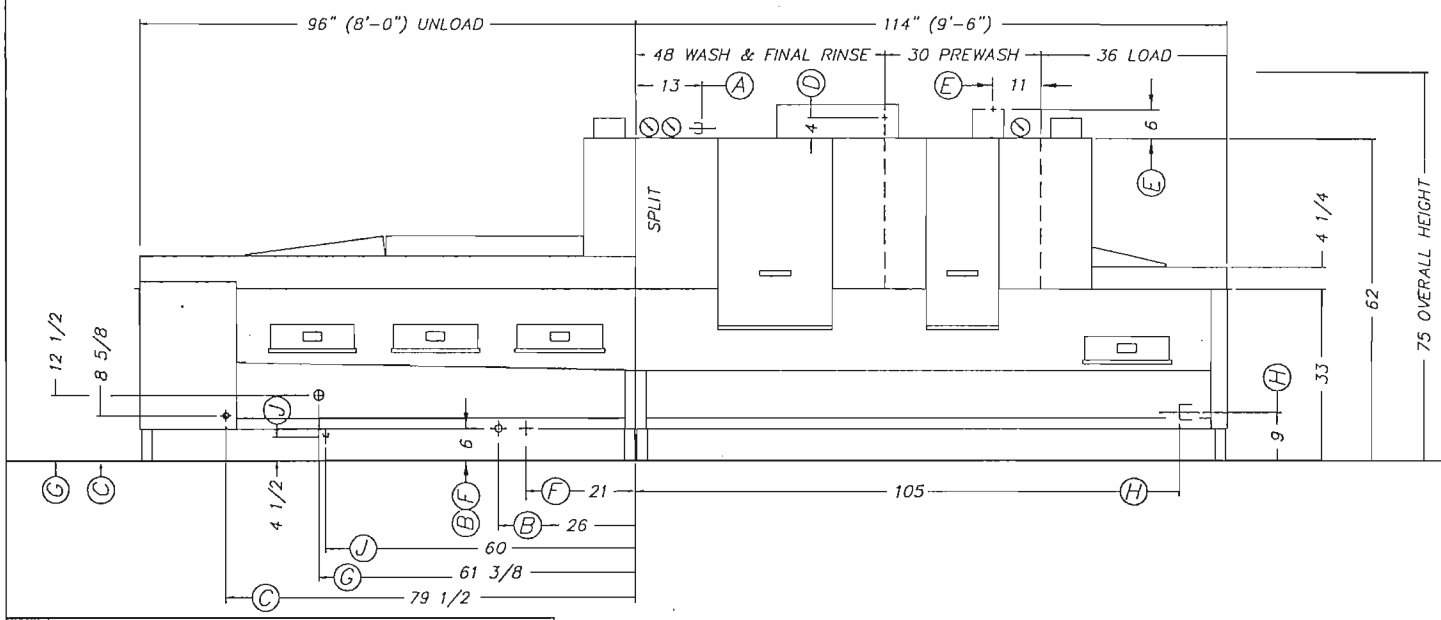

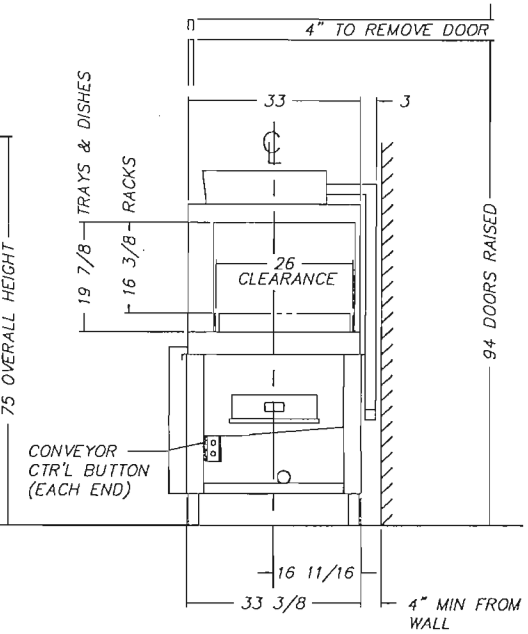

RIGHT TO LEFT FEED

INSTALLATION CONNECTIONS		
LTR	DESCRIPTION	SIZE
A	HOT WATER TO AUTO FILL-140° F	3/4 FIPS
B	HOT WATER TO ELECTRIC BOOSTER * ●	3/4 FIPS
C	HOT WATER TO STEAM BOOSTER ●	3/4 FIPS
D	ELECTRICAL CONNECTION - COMMON	40 KW & 5 1/2 HP
E	ELECTRICAL CONNECTION - LIGHTS	120 V
F	ELECTRICAL CONNECTION - BOOSTER *	27/45 KW
G	STEAM TO BOOSTER AND TANKS	1 1/2 FIPS
H	DRAIN CONNECTION - COMMON	2" FIPS
J	CONDENSATE RETURN - COMMON	3/4 FIPS

NOTES:

1. "●" HOT WATER TO BOOSTER 140° F STD/ 110° F SPECIAL
2. (2) 6" X 16" VENTS WITH ADJUSTABLE DAMPERS

DEFENDER 17
AUTOMATIC CONTINUOUS CONVEYOR TYPE DISHWASHING MACHINE

Insinger
Philadelphia, PA 19135
(215) 624-4800
FAX (215) 624-6966

DRWN: MFJ 6.24.96	SCALE	DWG. NO.	REV
REV: EMM 1.31.01	1/2" = 1'	DEF17R	C
FILE: STD/DEF17R			

INSTALLATION AND LAYOUT DETAIL

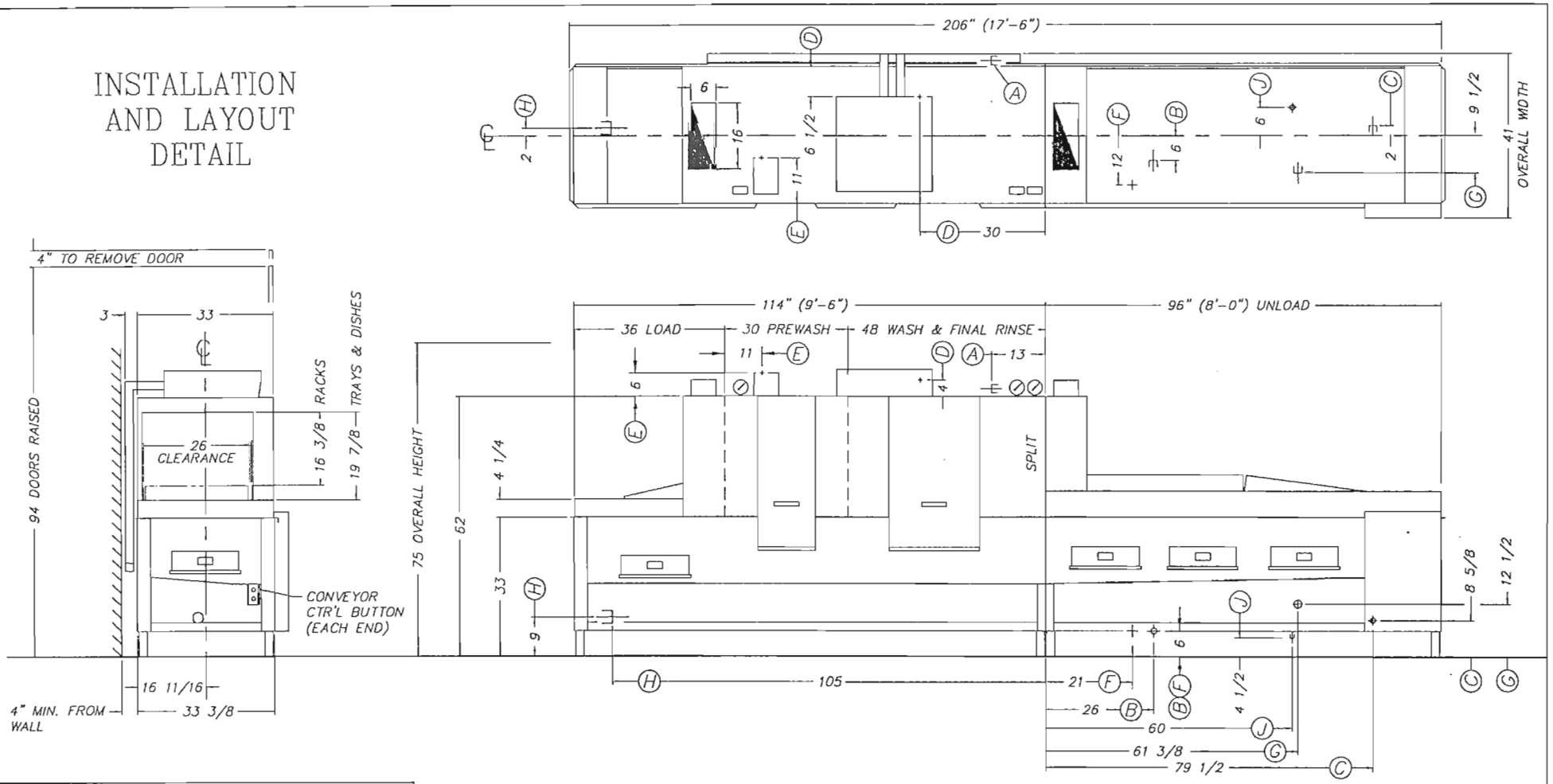

LEFT TO RIGHT FEED

INSTALLATION CONNECTIONS		
LTR	DESCRIPTION	SIZE
A	HOT WATER TO AUTO FILL-140° F	3/4 FIPS
B	HOT WATER TO ELECTRIC BOOSTER * ●	3/4 FIPS
C	HOT WATER TO STEAM BOOSTER ●	3/4 FIPS
D	ELECTRICAL CONNECTION - COMMON	40 KW & 5 1/2 HP
E	ELECTRICAL CONNECTION - LIGHTS	120 V
F	ELECTRICAL CONNECTION - BOOSTER *	27/45 KW
G	STEAM TO BOOSTER AND TANKS	1 1/2 FIPS
H	DRAIN CONNECTION - COMMON	2" FIPS
J	CONDENSATE RETURN - COMMON	3/4 FIPS

NOTES:

1. "●" HOT WATER TO BOOSTER 140° F STD/ 110° F SPECIAL
2. (2) 6" X 16" VENTS WITH ADJUSTABLE DAMPERS

DEFENDER 17
AUTOMATIC CONTINUOUS CONVEYOR TYPE DISHWASHING MACHINE

Insinger
Philadelphia, PA 19135
(215) 624-4800
FAX (215) 624-6966

DRWN: MFJ 6.24.96	SCALE	DWG. NO.	REV
REV: EMM 1.31.01	1/2" = 1'	DEF17L	C
FILE: STD/DEF17L			

Insinger
Machine Company

INSINGER MACHINE COMPANY
LIMITED WARRANTY

Insinger Machine Company, Inc. (Insinger) hereby warrants to the original retail purchaser of this Insinger Machine Company, Inc. product, that if it is assembled, installed, and operated in accordance with the printed instructions accompanying it, that said Insinger product shall be free of defects in material and workmanship, for a period of one (1) year (12 months) after the date of installation or fifteen (15) months from the date of shipment from Insinger, whichever occurs first, provided the Surefire™ Start-up & Checkout is completed by an Insinger Authorized Service Agency. If the Surefire™ Start-up & Checkout service is not completed, the warranty will expire after one year from the date of shipment from the factory. The Surefire™ Start-up & Checkout service is included in the purchase price of your Insinger dishwasher. Insinger reserves the right to not have this service done. Insinger will not assume any responsibility of extra costs for installation in any areas where there are jurisdictional problems with local trades or unions.

Insinger may require reasonable proof of your date of purchase. Therefore, you should retain your copy of the invoice or shipping document.

This limited warranty shall be limited to the repair of parts which prove defective under normal use and service within the warranty period set forth above, and which on examination shall indicate, to Insinger's satisfaction, that the parts are defective. Insinger will repair the defective part/parts. All warranty work must be done during normal working hours, by either an Insinger Appointed Service Agency or an agency receiving prior authorization from Insinger. Defective parts become the property of Insinger. Parts replaced within the warranty period carry a warranty only until the end of the original limited warranty period. Replacement parts not supplied by Insinger will relieve Insinger of all future liability and responsibility.

This limited warranty does not cover: lighting of gas pilots or burners, cleaning of gas lines, replacement of fuses or resetting of overload breakers, adjustment of thermostats, adjustment of clutches, opening or closing of utility supply valves or switching of electrical supply, cleaning of valves, strainers, screens, nozzles, or spray pipes, performance of regular maintenance and cleaning as outlined in the TECH MANUAL, damages resulting from water conditions, accidents, alterations, improper

use, abuse, misapplication, tampering, improper installation or failure to follow maintenance and operation procedures, fire, flood, acts of God or improper maintenance or service, or for improper operation or failure to follow normal operating instructions (as set out in the TECH MANUAL) or failure as a result of the aforestated.

Examples of the aforementioned, but without limitations, are: damage to exterior or interior finish as a result of the above, use with utility service other than that designated on the rating plate, improper connection to utility service, inadequate or excessive water pressure, corrosion from chemicals dispensed in excess of recommended concentrations, failure of electrical components due to connection of chemical dispensing equipment installed by others, leaks or damage resulting from such leaks as made by installer including those at machine table connections or by connections of chemical dispensing equipment installed by others, failure to comply with local building codes, damage caused by labor dispute.

Insinger is not responsible nor liable for any conditions of erosion or corrosion caused by corrosive detergents, acids, lye or other chemicals used in the washing and/or cleaning process.

THIS WARRANTY IS THE ONLY WARRANTY APPLICABLE TO INSINGER PRODUCTS AND IS EXPRESSLY IN LIEU OF ALL OTHER EXPRESS OR IMPLIED WARRANTIES, INCLUDING ANY IMPLIED WARRANTY OF MERCHANTABILITY OR FITNESS FOR A PARTICULAR PURPOSE, AND ANY OTHER OBLIGATION ON THE PART OF INSINGER. THE REMEDY CONTAINED IN THIS WARRANTY IS THE SOLE REMEDY FOR ANY DEFECT FOUND TO EXIST IN AN INSINGER PRODUCT AND ALL OTHER DAMAGES ARE EXCLUDED, INCLUDING ANY LIABILITY FOR INCIDENTAL OR CONSEQUENTIAL DAMAGE.

Insinger does not authorize any person or company to assume for it any other obligation or liability in connection with this warranty or for any sale, installation, use, removal, return or replacement of its equipment; and no such representations are binding on Insinger.

THIS LIMITED WARRANTY SUPERSEDES ALL OTHER EXPRESS WARRANTIES, IMPLIED WARRANTIES OF MERCHANTABILITY AND FITNESS OR LIMITED WARRANTIES AS OF JANUARY 1, 1993.

Insinger
Machine Company

PART 2

INSTALLATION and OPERATION INSTRUCTIONS

Insinger Machine Company

CENTURY 14 & DEFENDER SERIES
INSTALLATION INSTRUCTIONS
Part 2, Section A

A.1 PLACEMENT

A.1.1 Carefully uncrate machine.
A.1.2 Bolt the two sections together.

Note
Use silicone caulking in addition to the gasketing material provided between the sections. This will minimize the possibility of leaks.

A.2 ELECTRICAL CONNECTIONS

A.2.1 Connect electrical lines sized for the correct voltage, current and phase of the machine. These should agree with machine requirements indicated on the nameplate and labels in control panel.

A.2.1.1 There is an electrical connection required for the: 1. Pumps and control circuit, 2. Wash tank heaters (electric heat only) and, 3. Rinse tank heaters (electric heat only - Century 14 only).

A.2.1.2 Machines provided with a single-point connection require one electrical connection in the control panel for all functions excluding the booster (not available on all models).

Caution
Connections must be made to a circuit breaker or fused disconnect as provided by the end-user and required by local codes. A laminated wiring diagram is inside the control panel

Fuse Sizing Chart

Model	208VAC/3Θ	230VAC/3Θ	380VAC/3Θ	460VAC/3Θ
Century 14				
Motor Circuit	25A	20A	15A	10A
Wash Heaters	70A	60A	40A	30A
Rinse Heaters	110A	90A	60A	45A
Defender				
Motor Circuit	25A	25A	15A	15A
Motor Circuit w/ BD (steam)	30A	30A	20A	15A
Wash Heaters	140A	120A	80A	60A
BD (electric)	90A	80A	50A	40A

Caution

As with any 3 phase system, an electrician must check all motors for proper phasing, i.e., Pump motors must be running in direction indicated by arrow on housing.

A.2.1.3 Electrical termination points are also required between each of the sections in the termination box located on the frame in the rear of the machine near where the sections meet.

A.3 MECHANICAL CONNECTIONS

A.3.1 Connect 140DEGF and 180DEGF to pipestrings as tagged on the machines and noted on the installation drawing.

A.3.2 If machine is provided with steam heat connect the steam lines and steam condensate lines as tagged and noted on installation drawings.

A.3.3 Connect the drain lines.

Caution

Drain lines must be as specified on installation drawings. Drain line should be properly vented and should have fall of not less than ¼" to the foot of proper flow. Some area plumbing codes require drains to flow into an open gap with an opening twice the diameter of the pipe. Check with your local plumbing codes for the type of drain connection required.

Caution

All lines must be flushed prior to use to remove debris.

Caution

Do not reduce the size of lines as specified in installation drawings. All lines are sized to facilitate necessary flows, pressures, etc.

A.3.4 Adjust the compression spring located on the conveyor overload shutoff mechanism. This can be found on the unload end of the machine under the mechanism guard. There is a sticker marked with the factory test setting of the spring. Adjust to this point then run the conveyor full of ware. If the machine does not shut down the adjustment is set. If it does shut down adjust the spring tighter until the machine runs continuously.

A.4 HVAC

A.4.1 Ventilation system must be sized to provide adequate ventilation per machine specs. Refer to spec sheet.

A.4.2 Stainless steel, watertight ducting should be connected to the vent cowls on each end of the machine or an overhead venting system should be installed.

A.5 Chemicals

A.5.1 Upon completed installation of the dishwasher contact a local detergent/chemical supplier for the correct chemicals for your area.

A.5.2 Electrical connection points for the detergent dispenser and rinse injector are located inside the control panel. Refer to the wiring diagram for this machine for the proper connection points. Dispensers may be connected on either the primary voltage side of the machine or the 24VAC control voltage side.

Caution
When connecting on the 24VAC control voltage side of the transformer, total VA must not exceed 50VA.

A.5.3 The detergent density probe should be installed in the hole provided & labelled in the wash tank.

A.5.4 A switch on the control panel labelled "Energy Saver" is provided for de-liming the machine. When placed in the OFF position, this switch will defeat the machines energy saver function, allowing it to run continuously for de-liming. voltage side.

Insinger Machine Company

CENTURY 14 & DEFENDER SERIES
OPERATION INSTRUCTIONS
Part 2, Section B

Insinger dishwashers are user-friendly, making them the easiest dishwashers on the market to operate and maintain.
By following the operation procedure and general cleaning procedures your Insinger dishwasher will give you years of trouble free service.

B.1 Operation Instructions

B.1.1 Ensure drain overflow tube is in place Close all tank drain valves. One drain is provided for each tank of the dishmachine.

B.1.2 Check for proper installation and cleanliness of all internal, removeable components such as suction strainers, scrap screens, and spray manifolds.

B.1.3 Ensure all water, and steam lines are open. Ensure electrical circuits are on.

B.1.4 Close machine doors.

Warning
An interlock is provided to shut the machine down if the doors are open, there the machine will not run if doors are opened. Machines provided wih the optional Secutiry Package do not have this feature.

B.1.5 Move the power toggle switch to the "ON" position.

B.1.6 The machine will automatically begin to fill.

B.1.7 When the tanks are full the tank heat will operate automatically.

Caution
To ensure proper operation of the auto tank fill feature and the tank heaters, level float(s) located in each tank MUST be cleaned daily

B.1.8 Depress the Green button on the control panel to operate the pumps.

B.1.9 Located at the load and unload end of the machine is a start/stop station for operating the conveyor system. Depress the green button to start the conveyor.

Caution
An emergency stop bar is located at the end of the conveyor to shut the machine down. This will minimize ware breakage if the conveyor is not unloaded.

B.1.10 A light labelled "Check Conveyor Belt" is provided on the control panel. When this light illuminates the machine will automatically shut down. Check the conveyor belt for jamming or ware caught in the belt.

Caution

Should the light illuminate after an initial check for jams, DO NOT continue to operate the machine. Immediately contact a qualified service technician. Refer to the Conveyor Overload Shutoff Mechanism Adjustment section in the Maintenance Section of this manual.

B.1.11 The system is now ready for operation. All ware should be properly scrapped.

B.1.12 Place dirty ware on the conveyor belt. The ware will pass through the various machine cycles. The final rinse is automatically started when ware passes the photo-eye located at the entrance of the machine.

Note

the photo-eye located at the entrance of the machine should be cleaned daily of lime scale build-up for proper operation of the energy saver feature and the final rinse.

B.1.13 Upon completion of ware cleaning depress the Red button located on the control panel to stop the pumps.

B.1.14 Depress the red button located at the stop/start station on either end of the machine to stop the conveyor.

B.1.15 Move the Power toggle switch to the "OFF" position.

Caution

Move the power toggle switch to the OFF position before draining the machine.

B.1.16 Refer to the cleaning procedures for proper clean-up of the dishmachine.

B.1.17 Report any unusual occurrences to qualified service personnel.

B.2 Operation Instructions for Optional Electric Blower Dryer

B.2.1 Move the power toggle switch to the "ON" position. The amber light will illuminate.

B.2.2 Depress the green button on the Electric Blower Dryer control panel to start the blower and heaters.

Caution
The green start button must be depressed for approximately 10 seconds.

B.2.3 Depress the red button on the Electric Blower Dryer control panel to stop the blower and heaters.

B.2.4 Move the power toggle switch to the "OFF" position to shut the Electric Blower Dryer down.

The following cleaning procedures should be done daily, at the end of the shift.

B.3 Cleaning Procedures, Daily

B.3.1 Remove all internal removeable parts including spray manifolds, scrap screens, drain overflow tubes, suction strainers and curtains.

B.3.2 Remove the end caps from the spray manifolds and clean with the brush provided. Flush the manifolds.

B.3.3 Flush scrap screens.

B.3.4 Clean drain overflow tube.

Note
V-cup seal on the drain overflow tube may become gummed and not allow the overflow tube to seat properly. This will cause the drain to leak water. Remove any build-up on the v-seal. When the seal becomes worn, replace.

B.3.5 Clean suction strainers of build-up.

Note
Improper cleaning of suction strainers will cause the pumps to cavitate. This will cause poor washing results.

B.3.6 Clean tank level float(s).

Caution
Level floats must be cleaned daily. Build-up of scale or grease will cause faulty operation of the tank fill & heat system.

B.3.7 Clean curtains. When curtains are beyond cleaning or torn they should be replaced.

B.3.8 Final rinse nozzles should be cleaned of matter clogging the jet spray.

B.3.9 Clean the photo-eye lenses with a damp, soft cloth.

B.3.10 Doors should be left open to allow drying of interior surfaces.

Insinger
Machine Company

PART 3

MAINTENANCE and REPAIR PROCEDURES

Following is a basic guide for the repair and replacement of common dishwasher parts.
Refer to the Basic Service Guide for troubleshooting tips.

A.1 MAINTENANCE

A.1.1 Daily - Refer to the operation and cleaning instructions provided in this manual for daily cleaning procedures.

A.1.2 Weekly

- A.1.2.1 The entire machine should be wiped down using an industrial grade stainless steel cleaner.
- A.1.2.2 Under the supervision of your detergent supplier the machine interior must be properly de-limed.

Caution
The water quality in some areas requires de-liming to be done more frequently. Contact your detergent supplier for recommended de-liming frequency.

A.1.3 Quarterly

- A.1.3.1 Remove and clean the strainer screens on water and steam lines. If the screens cannot be cleaned, replace.
- A.1.3.2 Inspect condition of solenoid valve seats and diaphrams. Replace where necessary.
- A.1.3.3 Inspect drain O-Rings for leakage. Replace where necessary.
- A.1.3.4 Adjust conveyor chain tension using adjustment bolts located on exit end of machine.

A.2 MAINTENANCE PROCEDURES

A.2.1 Solenoid Valve Disassembly

- A.2.1.1 Disconnect power supply to machine. Turn off Water supply.
- A.2.1.2 Remove cap on top of coil. Remove coil.
- A.2.1.3 Remove 4 hex bolts and lift bonnet from valve body. Note positioning of spring and plunger.
- A.2.1.4 Remove main piston.
- A.2.1.5 Inspect for dirt, wear or lime build-up. Clean or replace as required.
- A.2.1.6 Reassemble in reverse of disassembly.

A.2.2 Line Strainer Disassembly

A.2.2.1 Shut off water or steam supply.

A.2.2.2 Remove large hex nut on bottom of strainer body.

A.2.2.3 Remove strainer screen. Inspect and clean or replace as necessary.

A.2.2.4 Reassemble in reverse of disassembly. Water flow must be same direction as arrow on line strainer body. Use new gaskets to insure a tight seal.

A.2.3 Pump Disassembly

A.2.3.1 Before disassembling pump ensure there are no obstructions in the pump intake. Remove and clean the suction strainer (inside tank).

A.2.3.2 IT IS NOT NECESSARY TO REMOVE THE PUMP HOUSING FROM THE MACHINE TO DISASSEMBLE THE PUMP.

A.2.3.3 Remove the pump motor and impeller adaptor by removing the 4 hex bolts attaching them to the pump housing.

A.2.3.4 Repair or replace the pump parts as required.

A.2.3.5 Reassemble in reverse of disassembly.

A.2.4 Immersion Heater Replacement

A.2.4.1 The immersion heater MUST be completely submerged at all times. If this is not the case contact a qualified service technician. The heated surface should never be in contact with sludge.

A.2.4.2 Remove the housing covering the wiring terminations. Disconnect the immersion heater wires.

A.2.4.3 Remove the immersion heater by loosening and removing the large hex nut.

A.2.4.4 Install in reverse of removal.

Note
Use plumbers putty as gasketing around immersion heater.

A.2.5 Tank Heat Temperature Adjustment

A.2.5.1 A temperature control board is provided in the control panel for easy adjustment of tank temperature. Though tank temperature is adjusted during the machines factory test it is sometimes necessary to re-adjust the temperature at start -up.

A.2.5.2 Locate the temperature control board (P/N DE9-96). Use the control panel layout drawing located in Section 3, Electrical Schematic and Replacement Parts.

A.2.5.3 Adjust the tank temperature to the desired temperature by turning the potentiometer located on the temperature control board. An arrow on the potentiometer indicates increase.

A.2.5.4 If the temperature does not change refer to section A.2.6, Troubleshooting Tank Temperatures.

A.2.6 Troubleshooting Tank Temperatures

A.2.6.1 Electric Heat

A.2.6.1.1 If temperature cannot be adjusted per section A.2.5 check the temperature control board P/N DE9-96 proper operation. If the temperature control board is faulty, replace.

A.2.6.1.2 Verify tank heat contactor is working correctly. If not, replace.

A.2.6.1.3 Verify all immersion heaters are working properly and not limed. If not, replace.

A.2.6.2 Steam Heat

A.2.6.2.1 See Section A.2.6.1.1.

A.2.6.2.2 Verify steam pressure per machine specifications.

A.2.6.2.3 Verify steam trap is not clogged. IF so, replace.

A.2.7 Motor Overloads

A.2.7.1 All motors used on Insinger Machines are provided with motor overloads. Motor overloads are adjusted when the machines are factory tested. Should it be necessary to adjust the motor overloads in the field first verify the motor current draw for the voltage the machine is using.

A.2.7.2 Using the Control Panel Component Layout Dwg.located in Section 3 to identify the overload adjust by turning the dial to the appropriate AMP draw.

A.2.8 Level System

A.2.8.1 The level control system consists of one level timer (P/N DE7-31) and one level float (P/N D35-60) per tank.

A.2.8.2 The system will not allow the tank heat to energize without water in the tank.

A.2.8.3 Should the tank heat energize without water in the tank troubleshoot the system to find the problem.

Caution
Dirty level floats may cause the tank heat to energize with no water in the tanks. LEVEL FLOATS MUST BE CLEANED DAILY.

A.2.9 Final Rinse Actuator

A.2.9.1 The final rinse is actuated by the photo-eye emitter and receiver located at the entrance to the machine.

A.2.9.2 When the beam is broken by a plate, etc., the final rinse timer is energized turning on the final rinse solenoid and allowing the water to flow. After one minute the timer will de-energize turning the solenoid off.

A.2.9.3 The energy saver timer (P/N DE7-28) is reset to 0 at the same time the final rinse timer is energized. The energy saver timer is adjustable between 0-300SEC.

A.2.10 Conveyor Belt Adjustment

A.2.10.1 The conveyor belt tension is adjustable by locating two adjustment bolts on the load side of the machine. The bolts can be moved in and out of the conveyor follower shaft therefore adjusting the belt tension.

A.2.11 Conveyor Overload Shut-off Mechanism (P/N 1100-289) Adjustment

A.2.11.1 A clutchless overload is used to shut the machine completely down should a jam occur in the conveyor system. The jam may be caused by ware being caught, bent tracks or misalignment of the conveyor belt.

A.2.11.2 Tension is held on the ATC Arm (P/N 1100-287) by a spring (P/N D-351). The ATC Arm keeps the switch (P/N D-2215A) engaged.

A.2.11.2.1 Should a jam occur the spring gives disengaging the ATC Arm from the switch. The "Check Conveyor Belt" light will illuminate and the machine will completely shut-down. Refer to the wiring diagram for the electrical controls.

A.2.11.3 Adjust the conveyor tension by loosening the adjusting nut and locknut.

A.2.11.4 Turn the adjusting-nut to either compress or expand the spring. Compressing the spring will raise the required force to shut-down the machine, expanding the spring will lower the force.

A.2.11.5 Maintain the adjustment by tightening the locknut to the adjustment nut.

Insinger Machine Company

BASIC SERVICE GUIDE

SYMPTOM	POSSIBLE CAUSE	Solution
1. Machine will not operate	a. No power b. Blown fuse or tripped breaker c. Motor overloads tripped	a. Check power supply b. Replace fuse; reset breaker c. Reset overload
2. Tank will not hold water	a. Drain not closed b. Drain overflow not seated or installed c. Pump petcock opened d. Overflow v-seal dirt/worn	a. Close drain b. Reseat or install drain overflow c. Close pump petcock d. Clean/replace v-seal
3. Tank fills beyond overflow	a. Obstruction in overflow tube or drain line	a. Remove obstruction
4. Water leaks around door	a. Doors not seating b. Clogged spray pipe	a. Reseat doors b. Clean spray pipe with brush provided
5. Weak or ineffective spray	a. Clogged spray pipe b. Manifolds not installed properly c. Obstruction in pump d. Pump rotation reversed e. Suction strainer clogged	a. Clean spray pipe with brush pipe b. Ensure proper placement of upper and lower pipes c. Clear obstruction through pump inspection plate d. Arrow on pump housing indicates direction, correct electrically e. Clean suction strainer

Insinger Machine Company

BASIC SERVICE GUIDE

SYMPTOM	POSSIBLE CAUSE	Solution
6. Weak or ineffective final rinse spray	a. Lime deposits in spray nozzles b. Low water pressure c. Clogged line strainer d. Closed water supply valve	a. Clean or replace nozzles b. Adjust to 20PSI c. Remove line strainer and clean d. Open ball valve
7. Water hammer	a. Excessive water line pressure	a. Install water hammer valve
8. Machine vibrates or is noisy	a. Pump rotation reversed	a. Arrow on pump housing indicates direction, correct electrically
9. Final rinse will not shut off	a. Final rinse solenoid valve clogged b. Diaphragm worn c. Solenoid valve still powered-up	a. Disassemble valve and clean internal parts of scale or replace b. Replace with solenoid valve repair kit c. Check final rinse actuating circuit for proper operation

Insinger Machine Company

BASIC SERVICE GUIDE

SYMPTOM	POSSIBLE CAUSE	Solution
10. Tank not filling/tank heat coming on with no water in tank	a. Level float dirty b. Level control system not working	a. Clean level float b. Troubleshoot level control circuit
11. Tank temperature too low/high	a. Thermostat not adjusted b. Heat circuitry not working c. Electric heat - power turned off d. Electric heat - immersion heaters limed e. Steam heat - steam turned off f. Steam heat - not enough steam g. Steam heat - condensate traps clogged h. Gas heat - gas turned off i. Gas heat - pilot not lit (if provided)	a. Adjust thermostat b. Troubleshoot circuitry c. check circuit breakers d. De-lime machine e. Turn steam on f. Adjust steam pressure per machine spec's g. Clean or replace condensate traps h. Turn on gas i. Re-light pilot

Insinger
Machine Company

PART 4

ELECTRICAL SCHEMATICS and ELECTRICAL REPLACEMENT PARTS

FOR CENTURY 14

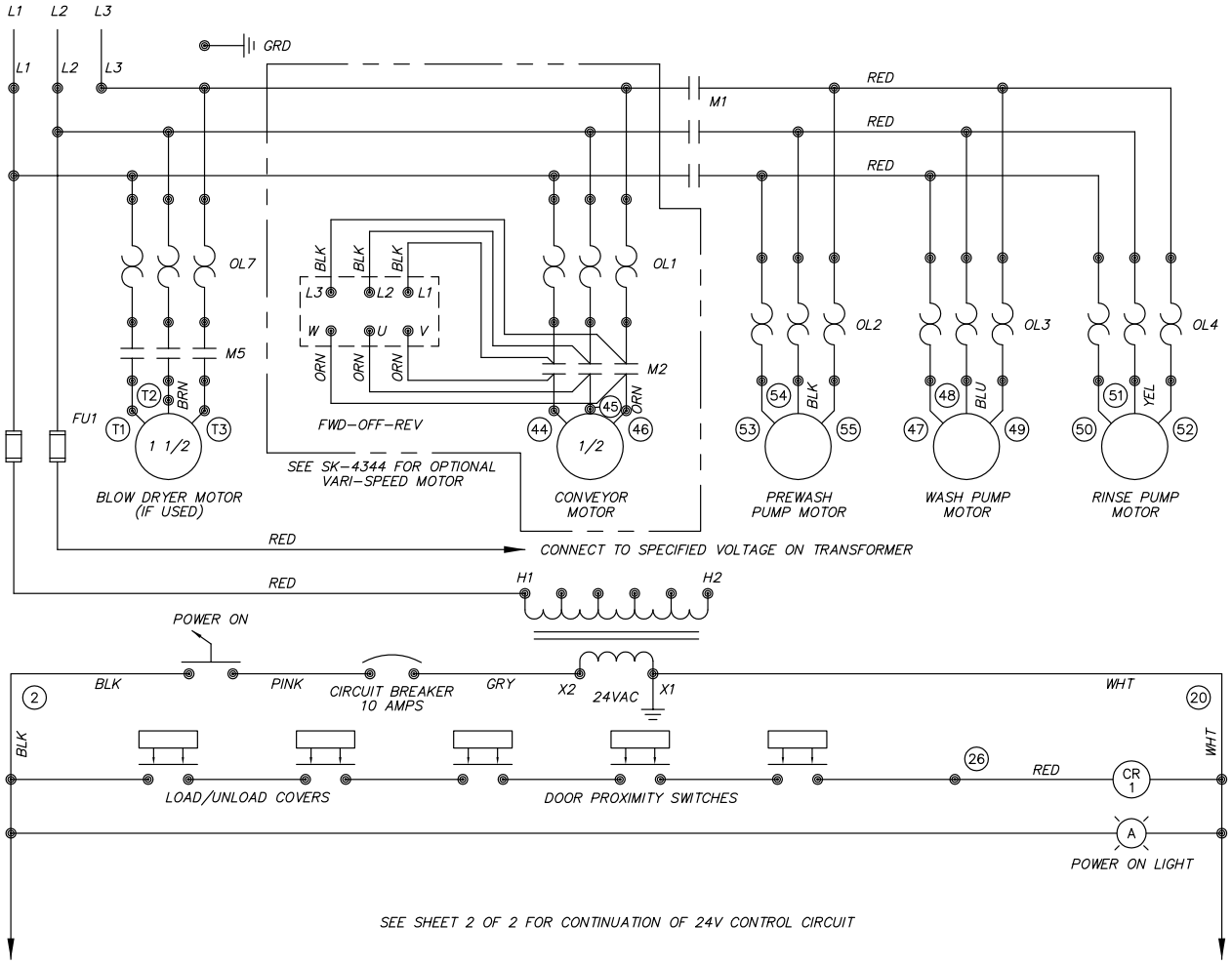

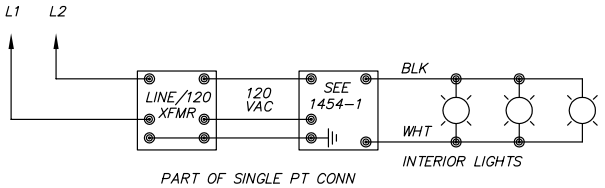

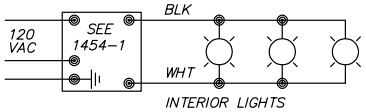

SEPARATE 120V SERVICE

SHEET 1 OF 2

U	–	10.15.24	TITLE CLIPPER/MASTER/CENTURY STEAM HEAT	DWG. NO. WFLT010
T	1927	3.25.02		
S	1907	11.16.01		
REV	ECN NO	DATE	Insinger Philadelphia, PA 19135 (215) 624-4800 FAX (215) 624-6966	DRWN/DATE RAF 05.01.95
FILE: WIRE\WFLT010				

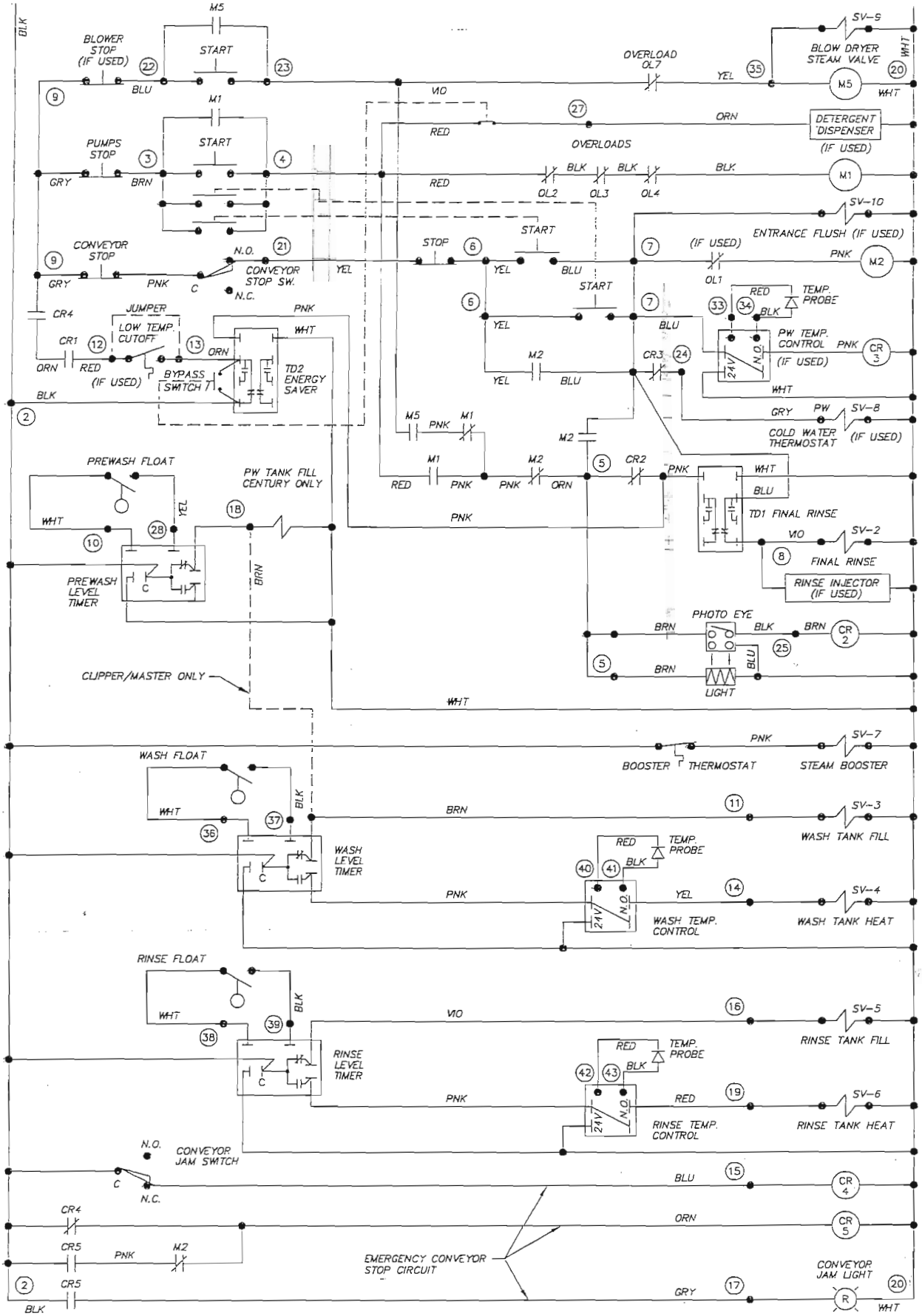

			TITLE	DWG. NO.
T	1927	3.25.02	CLIPPER/MASTER/CENTURY STEAM HEAT	WFLT010
S	1907	11.16.01		
REV	ECN NO	DATE	Insinger Philadelphia, PA 19135 (215) 624-4800 FAX (215) 624-6965	DRWN/DATE RAF 05.01.95
SHEET 2 OF 2	FILE: WIRE\WFLT010			

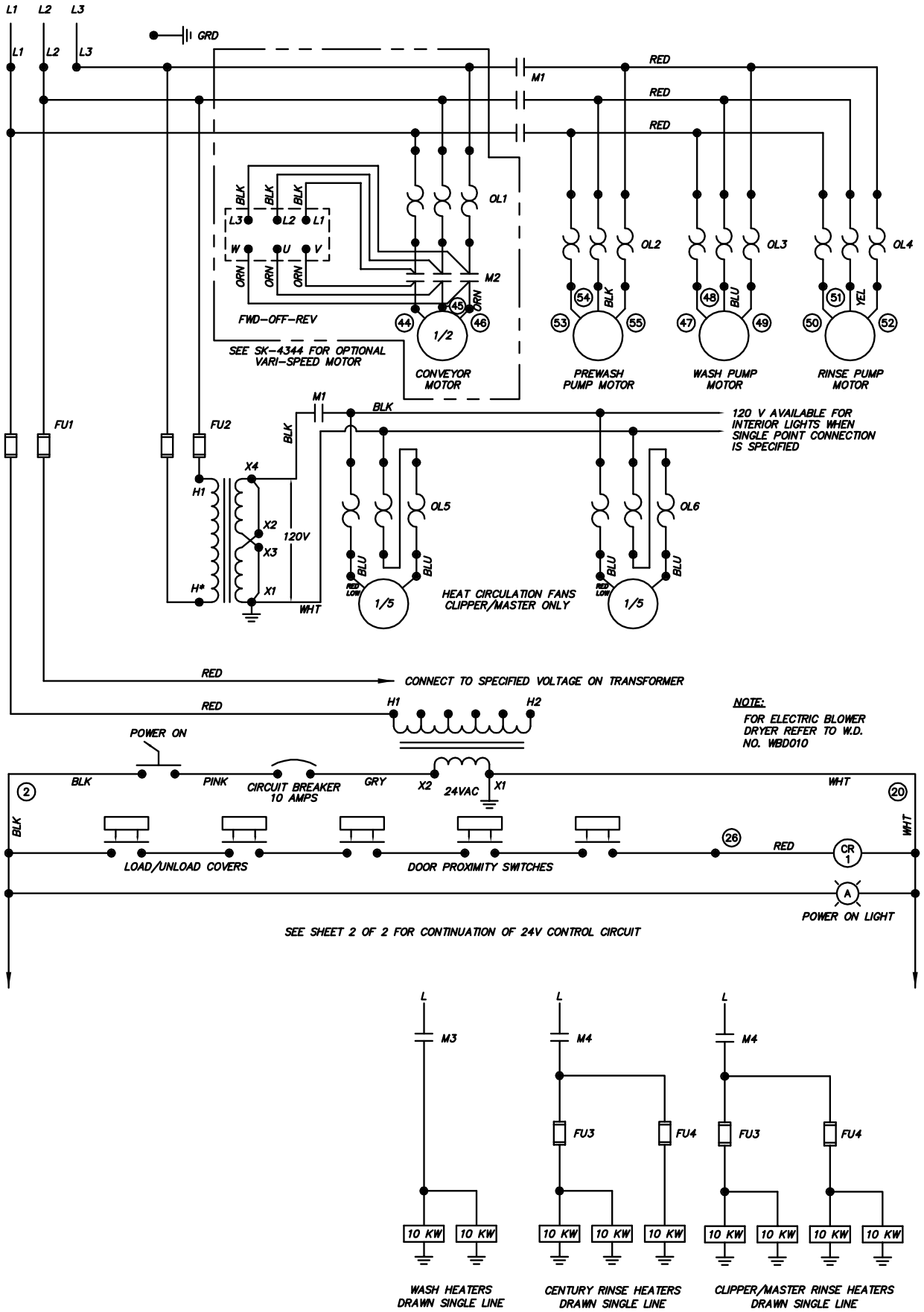

NOTE:

1. THREE SEPARATE ELECTRICAL SERVICES ARE NECESSARY:
   1– MOTORS/CONTROLS
   2– WASH HEATERS
   3– RINSE HEATERS

SHEET 1 OF 2

REV	ECN NO	DATE
V	–	10.15.24
U	1927	3.25.02
T	1717	11.18.99

FILE: WIRE\WFLT020

TITLE: CLIPPER/MASTER/CENTURY ELECTRIC HEAT

DWG. NO. WFLT020

Insinger
Philadelphia, PA 19135
(215) 624–4800
FAX (215) 624–6966

DRWN/DATE RAF 05.06.95

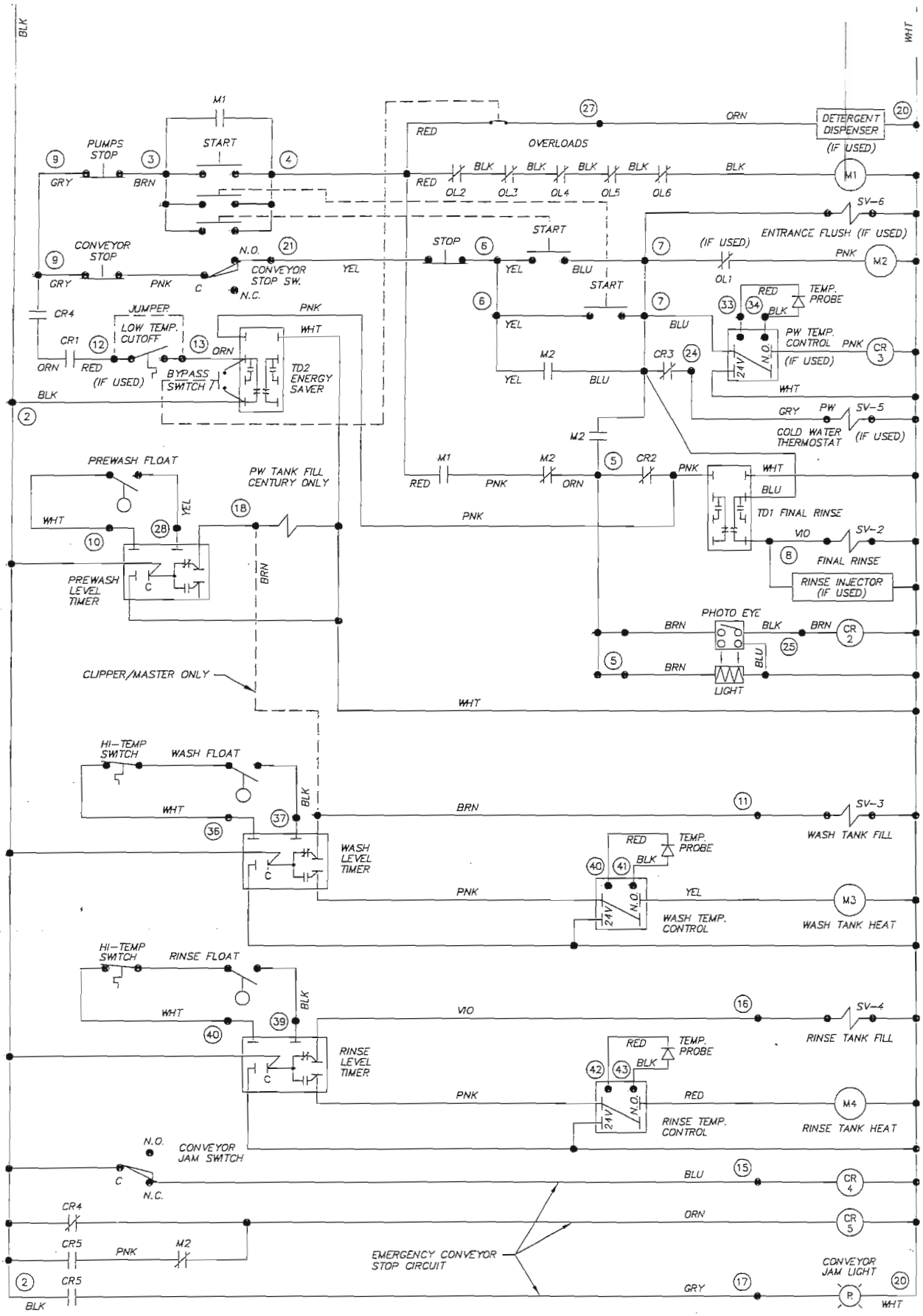

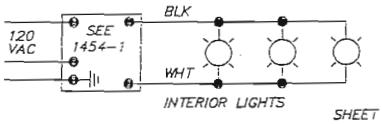

SHEET 2 OF 2

U	1927	3.25.02	TITLE CLIPPER/MASTER/CENTURY ELECTRIC HEAT	DWG. NO. WFLT020
T	1717	11.18.99		
S	1661	3.11.99		
REV	ECN NO	DATE	Insinger Philadelphia, PA 19135 (215) 624-4800 FAX (215) 624-6966	DRWN/DATE RAF 05.06.95
FILE: WIRE\WFLT020				

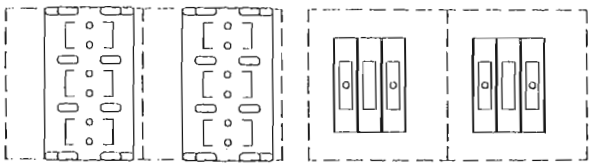

LOCATION OF ALTERNATE FUSEBLOCKS

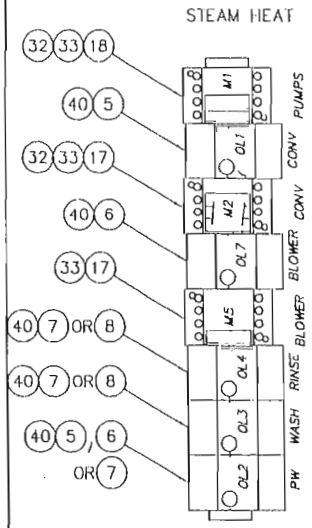

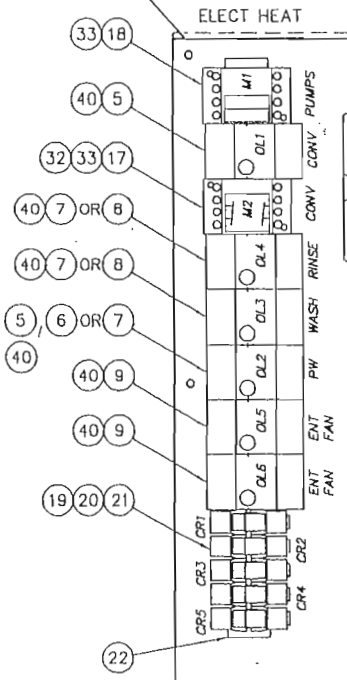

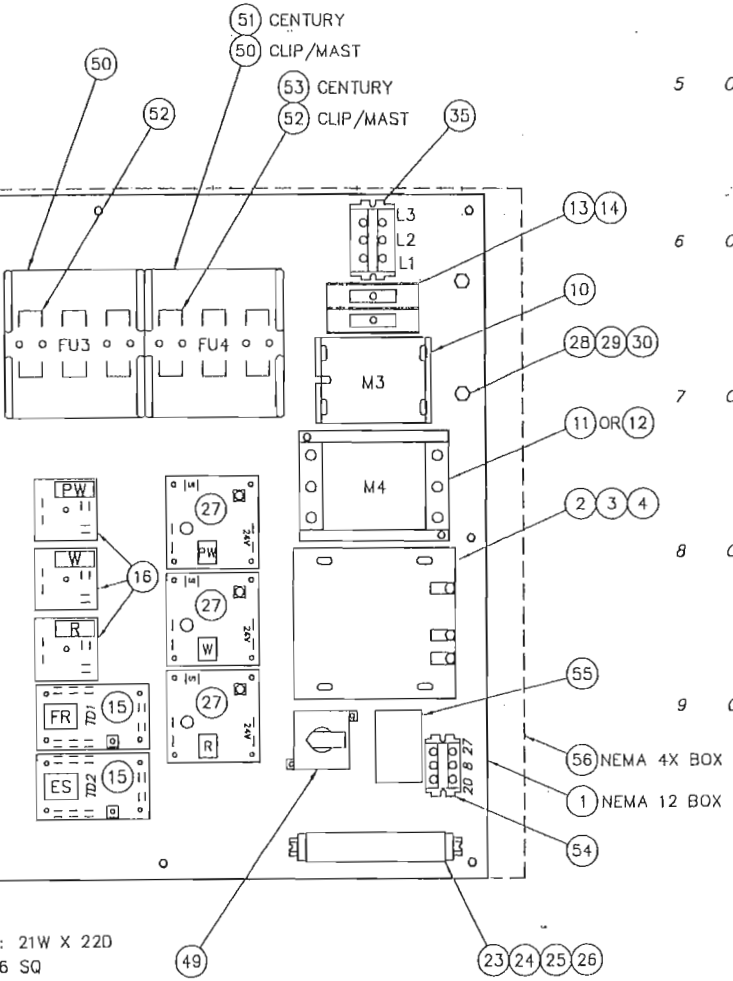

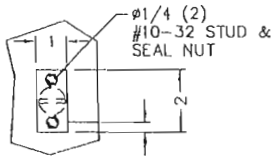

16 GA SECURITY PLATE
(OVER LATCH)
NEMA 4X SEC PKG ONLY

NEMA 12 PLATE (SHOWN): 21W X 22D
NEMA 4X PLATE: 22 3/16 SQ

ITEM	DESCRIPTION		PART NO.	QTY
1	COMPONENT MTG PLATE (NEMA 12 BOX)		1282-30	1
2	TRANSFORMER (250 VA, 24 VAC)		DE6-25	1
3	FUSE BLOCK KIT (250 VA XFMR)		DE9-165	1
4	FUSE (250 VA TRANSFORMER PRIMARY)			2
	460 V	FNQ-R-1.8	DE9-169	
	380 V	FNQ-R-2	DE9-170	
	220 - 230 V	FNQ-R-3.5	DE9-174	
	208 V	FNQ-R-4	DE9-175	
5	OVERLOAD RELAY (1/2 HP CENTURY PRE-WASH PUMP, ALL 1/2 HP CONV DRIVES)			AR
	460/3/60	1-1.6 A	DE2-50	
	380/3/50	1-1.6 A	DE2-50	
	230/3/60	1.6-2.5 A	DE2-52	
	208/3/60	1.6-2.5 A	DE2-52	
6	OVERLOAD RELAY (1-1/2 HP CLIPPER PREWASH PUMP AND 1-1/2 HP STEAM DRYER MOTOR)			AR
	460/3/60	1.6-2.5 A	DE2-52	
	380/3/50	2.5-4 A	DE2-53	
	230/3/60	4-6 A	DE2-54	
	208/3/60	4-6 A	DE2-54	
7	OVERLOAD RELAY (2 HP CENTURY & CLIPPER WASH/RINSE AND 2 HP MASTER PW PUMPS)			AR
	460/3/60	2.5-4 A	DE2-53	
	380/3/50	2.5-4 A	DE2-53	
	230/3/60	5.5-8 A	DE2-55	
	208/3/60	5.5-8 A	DE2-55	
8	OVERLOAD RELAY (3 HP MASTER WASH & RINSE PUMPS)			2
	460/3/60	4-6 A	DE2-54	
	380/3/50	4-6 A	DE2-54	
	230/3/60	7-10 A	DE2-56	
	208/3/60	7-10 A	DE2-56	
9	OVERLOAD RELAY (1/5 HP HEAT FAN)			2
	120/1/60	2.5-4	DE2-53	

SHEET 1 OF 2

TITLE: CLIPPER/MASTER/CENTURY CONTROL PANEL LAYOUT

Insinger — Philadelphia, PA 19135 (215) 624-4800 FAX (215) 624-6966

DRWN/DATE: MFJ 05.20.95

FILE: SKETCH\SK-3623

REV	ECN NO	DATE
J	1945	7.17.02
H	1857	2.15.01

SCALE: 1/4

DWG. NO.: SK-3623

ITEM	DESCRIPTION		PART NO.	QTY
10	CONTACTOR (20 KW ELECT WASH TANK HEAT ONLY)			1
	460/3/60	30 A RES	DE1-109	
	380/3/50	50 A RES	DE1-110	
	230/3/60	65 A RES	DE1-111	
	208/3/60	65 A RES	DE1-111	
11	CONTACTOR (30 KW ELECT RINSE TANK HEAT ONLY)			1
	460/3/60	50 A RES	DE1-110	
	380/3/50	65 A RES	DE1-111	
	230/3/60	SP-47	DE1-94	
	208/3/60	SP-57	DE1-95	
12	CONTACTOR (40 KW ELECT RINSE TANK HEAT ONLY)			1
	460/3/60	65 A RES	DE1-111	
	380/3/50	SP-47	DE1-94	
	230/3/60	SP-77	DE1-96	
	208/3/60	SP-77	DE1-96	
13	FUSE BLOCK, 2 POLE (XFMR PRIMARY)		DE9-185	1
14	FUSE (1000 VA TRANSFORMER PRIMARY)			2
	460 V	FNQ-R-4	DE9-175	
	380 V	FNQ-R-5	DE9-176	
	230 V	FNQ-R-7.5	DE9-178	
	208 V	FNQ-R-8	DE9-179	
15	TIMER (ENERGY SAVER & FINAL RINSE)		DE7-28	2
16	TIMER (LIQUID LEVEL)		DE7-35	AR
17	CONTACTOR (CONV & DRYER BLOWER)	SP4	DE1-93	AR

ITEM	DESCRIPTION		PART NO.	QTY
18	CONTACTOR (PUMPS)			1
	CENTURY	SP4	DE1-93	
	CLIP & MAST (380 - 460 V)	SP17	DE1-56AE	
	CLIP & MAST (208 - 230 V)	SP27	DE1-55AE	
19	RELAY BASE		DE2-37	AR
20	RELAY		DE2-38	AR
21	RELAY HOLD DOWN SPRING		DE3-43	AR
22	DIN RAIL (35 mm)		DE9-216	1
23	DIN RAIL (15 mm)		DE3-42	1
24	TERMINAL SECTION		DE3-39	AR
25	TERMINAL END COVER PLATE		DE3-40	1
26	TERMINAL END CLAMP		DE3-41	2
27	TEMPERATURE CONTROL BOARD		DE9-251	AR
28	GROUNDING STUD		D309C-GC-4G	2
29	LOCKWASHER, 1/4"		D313C-G5	2
30	HEX NUT, 1/4-20		D312C-GC-2	2
31	CONTACT BLOCK, NC		DE5-42AE	1
32	AUX CONTACT NC		DE1-61AE	AR
33	AUX CONTACT NO		DE1-62AE	AR
34	CIRCUIT BREAKER (10A)		DE9-106	1
35	TERMINAL BLOCK ASSY		DE3-3	1
36	SELECTOR SWITCH ASSY		DE8-54	2
37	CONTACT BLOCK, NO		DE5-41AE	1
38	PILOT LIGHT ASSY - YELLOW		DE8-53	1

ITEM	DESCRIPTION		PART NO.	QTY
39	PILOT LIGHT ASSY - RED		DE8-52	1
40	OVERLOAD BASE		DE2-60	AR
41	PUSHBUTTON ASSY, START-STOP		DE5-32SQ	1
42	CONTACT BLK, NO/NC		DE5-46SQ	1
43	CONTROL BOX, NEMA 12		1442-32	1
44	CONTROL BOX COVER, NEMA 12		1442-32	1
45	GASKET, NEMA 12 BOX		9007-001	1
46	NUT, NEMA 12 BOX		D312C-EF-5	4
47	DECAL		SK-3799	1
48	DATA DECAL		SK-3715	1
49	SWITCH (FWD - OFF - REV)		DE8-56	1
50	FUSEBLOCK			AR
	460 V		DE9-186	
	380 & 230 V		DE9-212	
	208 V		DE9-213	
51	FUSEBLOCK (CENTURY ONLY)			1
	460, 380, & 230 V		DE9-186	
	208 V		DE9-212	
52	FUSE			AR
	460 V	KTK-R-30	DE9-189	
	380 V	JJS-40	DE9-209	
	230 V	JJS-60	DE9-210	
	208 V	JJN-70	DE9-211	
53	FUSE (CENTURY ONLY)			3
	460 V	KTK-R-15	DE9-194	
	380 V	KTK-R-20	DE9-195	
	230 V	KTK-R-30	DE9-189	
	208 V	JJS-35	DE9-208	
54	TERMINAL BLOCK ASSY		DE3-9	1
55	CAUTION LABEL		SK-3451	1
56	COMPONENT MTG PLATE, NEMA 4X BOX		SK-4446	1
57	CONTROL BOX (24 X 24 X 8), NEMA 4X		DE9-249	1

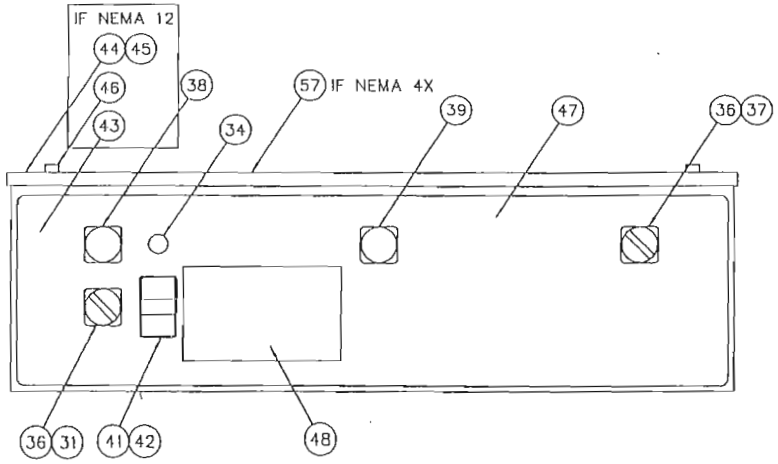

NOT SHOWN

ELECTRIC IMMERSION HEATER (10 KW)		AR
440-480 V, 3 PH	DE13-SF73	
380 V, 3 PH	DE13-SF53	
220-240 V, 3 PH	DE13-SF43	
208V, 3PH	DE13-SF23	
TRANSFORMER (DRY) FOR HEAT FANS		1
1000 VA	DE6-37	
1000 VA (208 & 380 V ONLY)	DE6-32	
REMOTE START/STOP PUSHBUTTON STA	DE5-43AE	AR
TEMPERATURE SENSOR	DE9-252	AR

SHEET 2 OF 2

TITLE: CLIPPER/MASTER/CENTURY CONTROL PANEL LAYOUT

Insinger
Philadelphia, PA 19135
(215) 624-4800
FAX (215) 624-6966

DRWN/DATE: MFJ 05.20.95

FILE: SKETCH\SK-3623

REV	ECN NO	DATE
J	1945	7.17.02
H	1857	2.15.01

SCALE: 1/4

DWG. NO. SK-3623

Insinger
Machine Company

PART 4

ELECTRICAL SCHEMATICS and ELECTRICAL REPLACEMENT PARTS

FOR DEFENDER SERIES

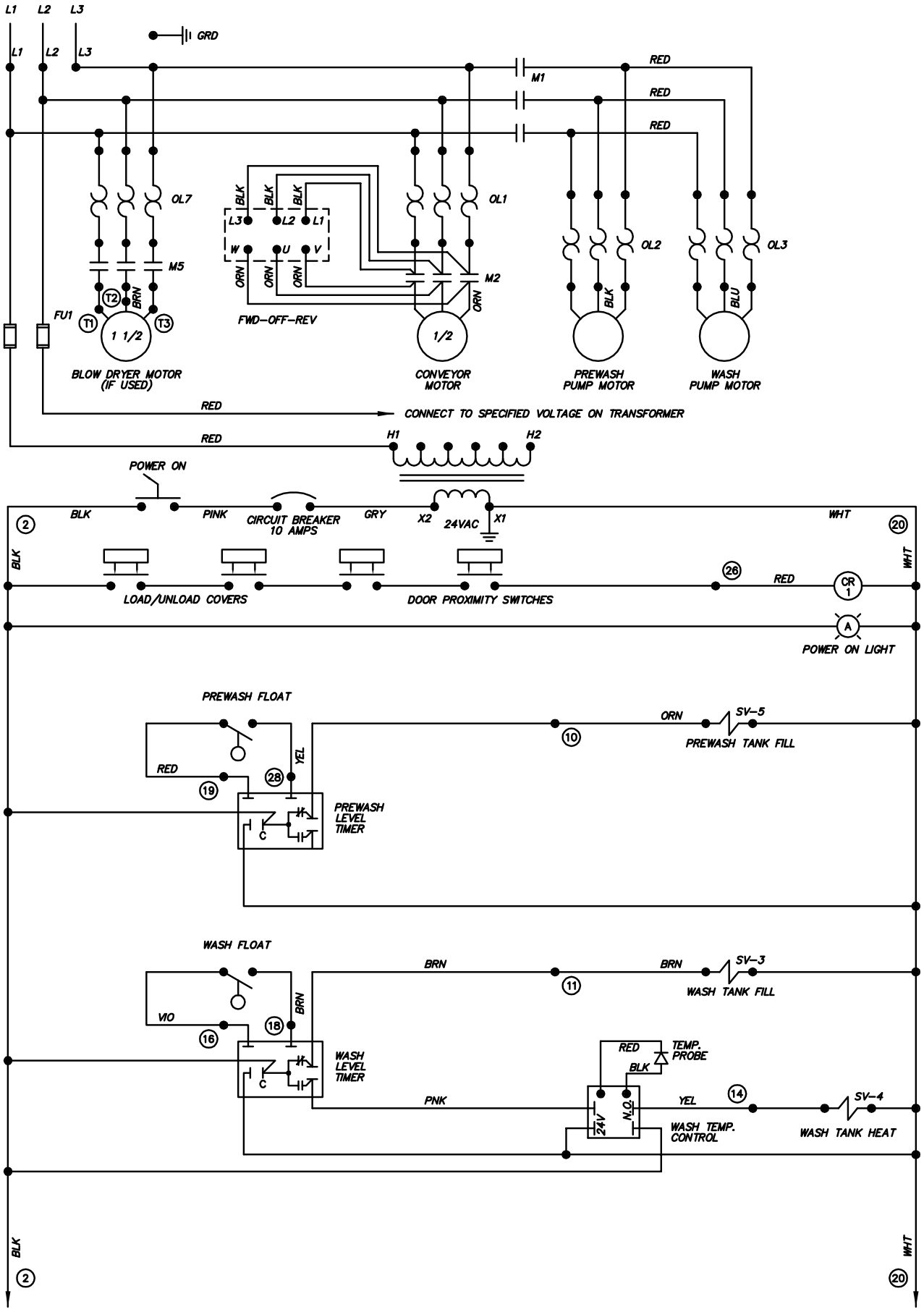

SEE SHEET 2 OF 2 FOR CONTINUATION OF 24V CONTROL CIRCUIT

REV	ECN NO	DATE
E	–	10.15.24
D	1927	3.25.02
C	1907	11.16.01

FILE: WIRE\WDEF010

TITLE: DEFENDER STEAM HEAT

DWG. NO. WDEF010

Insinger

Philadelphia, PA 19135
(215) 624–4800
FAX (215) 624–6966

DRWN/DATE MFJ 12.23.96

SHEET 1 OF 2

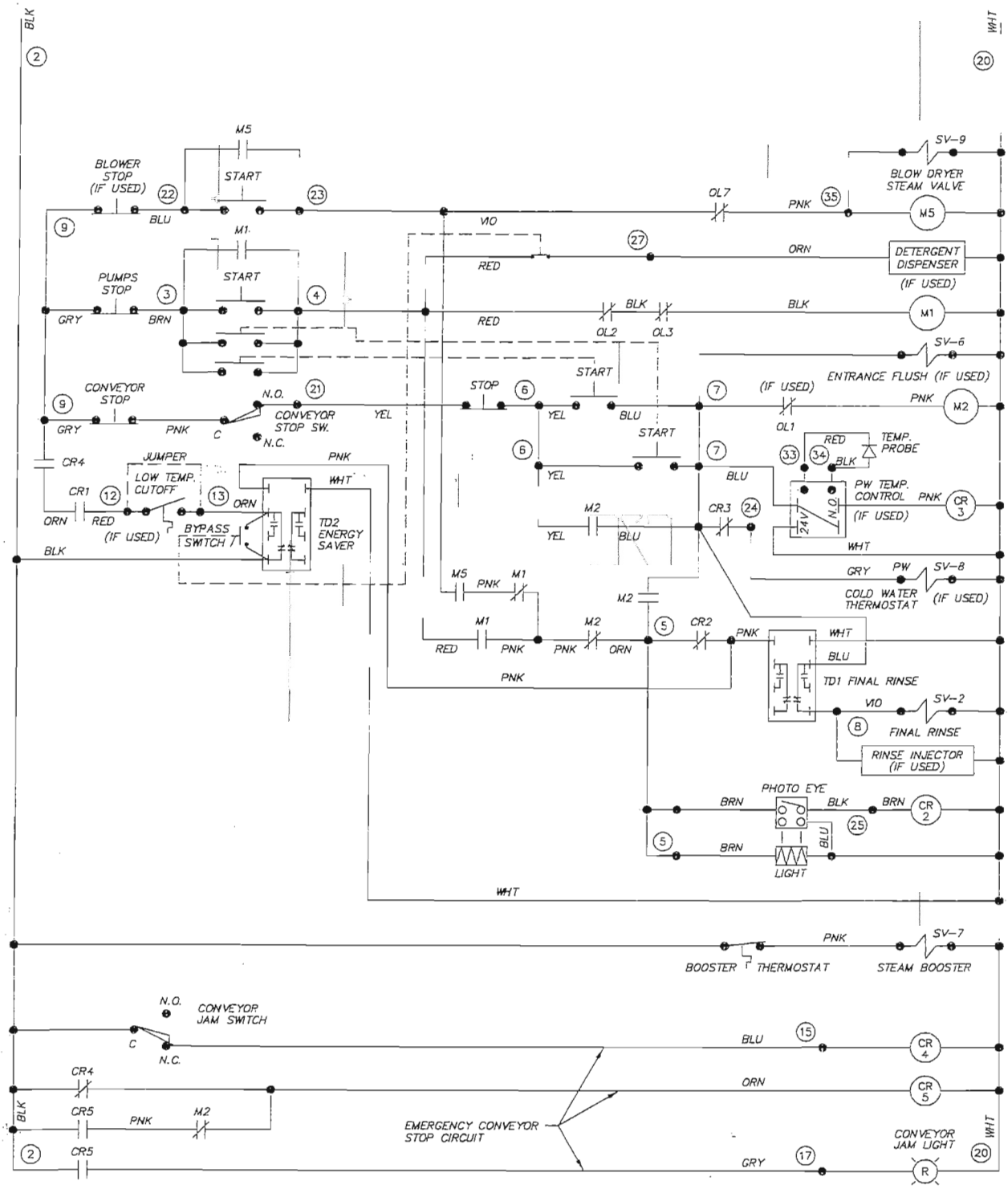

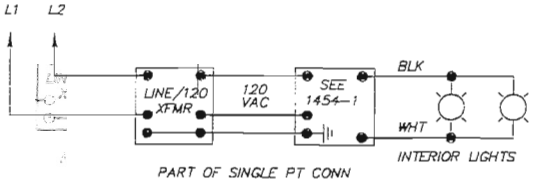

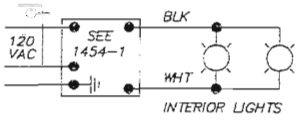

REV	ECN NO	DATE
D	1927	3.25.02
C	1907	11.16.01
B	1583	12.1.97

FILE: WIRE\WDEF010

SHEET 2 OF 2

TITLE: DEFENDER STEAM HEAT

DWG. NO. WDEF010

Insinger — Philadelphia, PA 19135 (215) 624-4800 FAX (215) 624-6966

DRWN/DATE MFJ 12.23.96

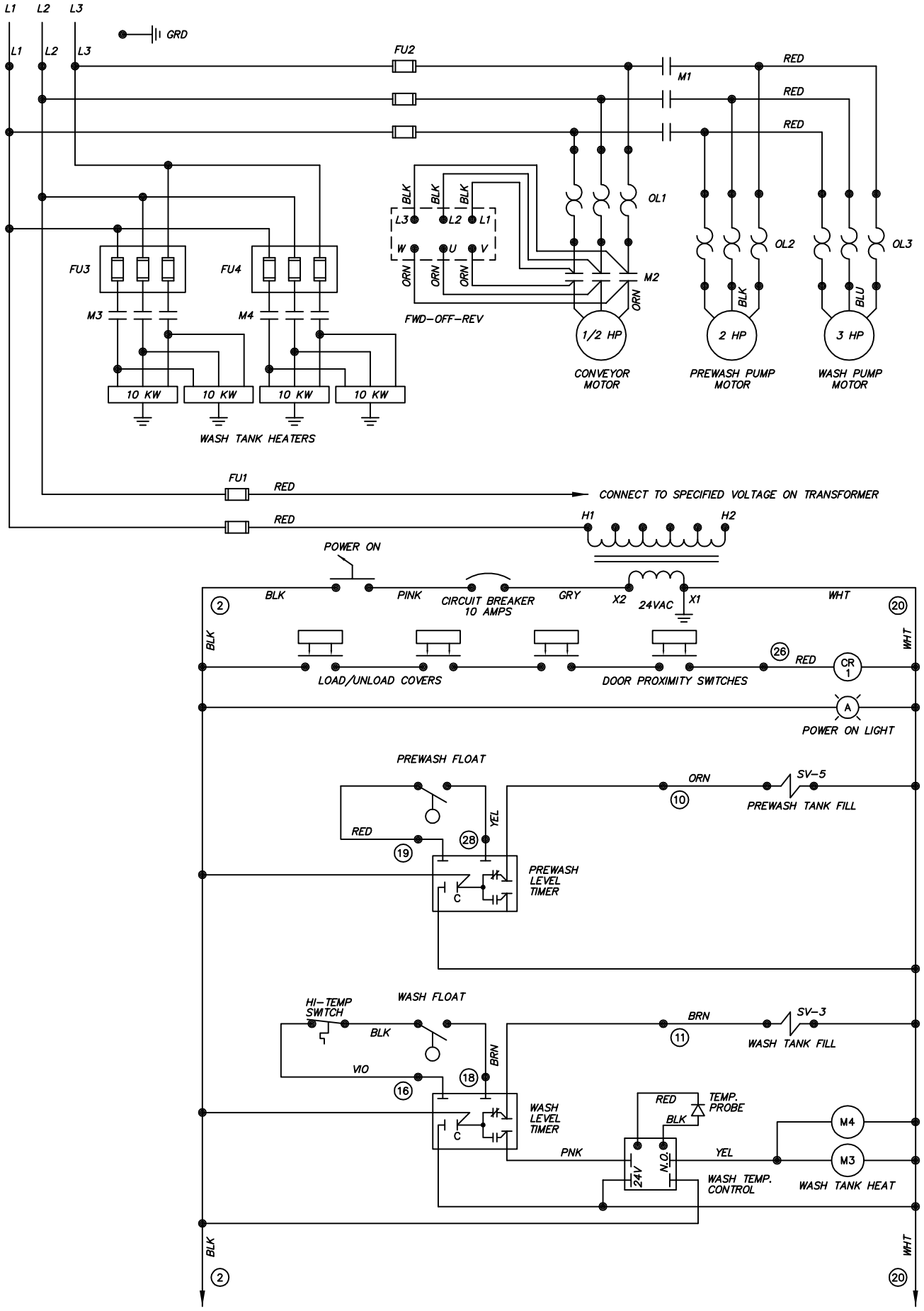

SEE SHEET 2 OF 2 FOR CONTINUATION OF 24V CONTROL CIRCUIT

REV	ECN NO	DATE
D	–	10.15.24
C	1927	3.25.02
B	1583	12.1.97

FILE: WIRE\WDEF020

TITLE: DEFENDER ELECTRIC HEAT

DWG. NO. WDEF020

Insinger
Philadelphia, PA 19135
(215) 624–4800
FAX (215) 624–6966

DRWN/DATE MFJ 9.10.96

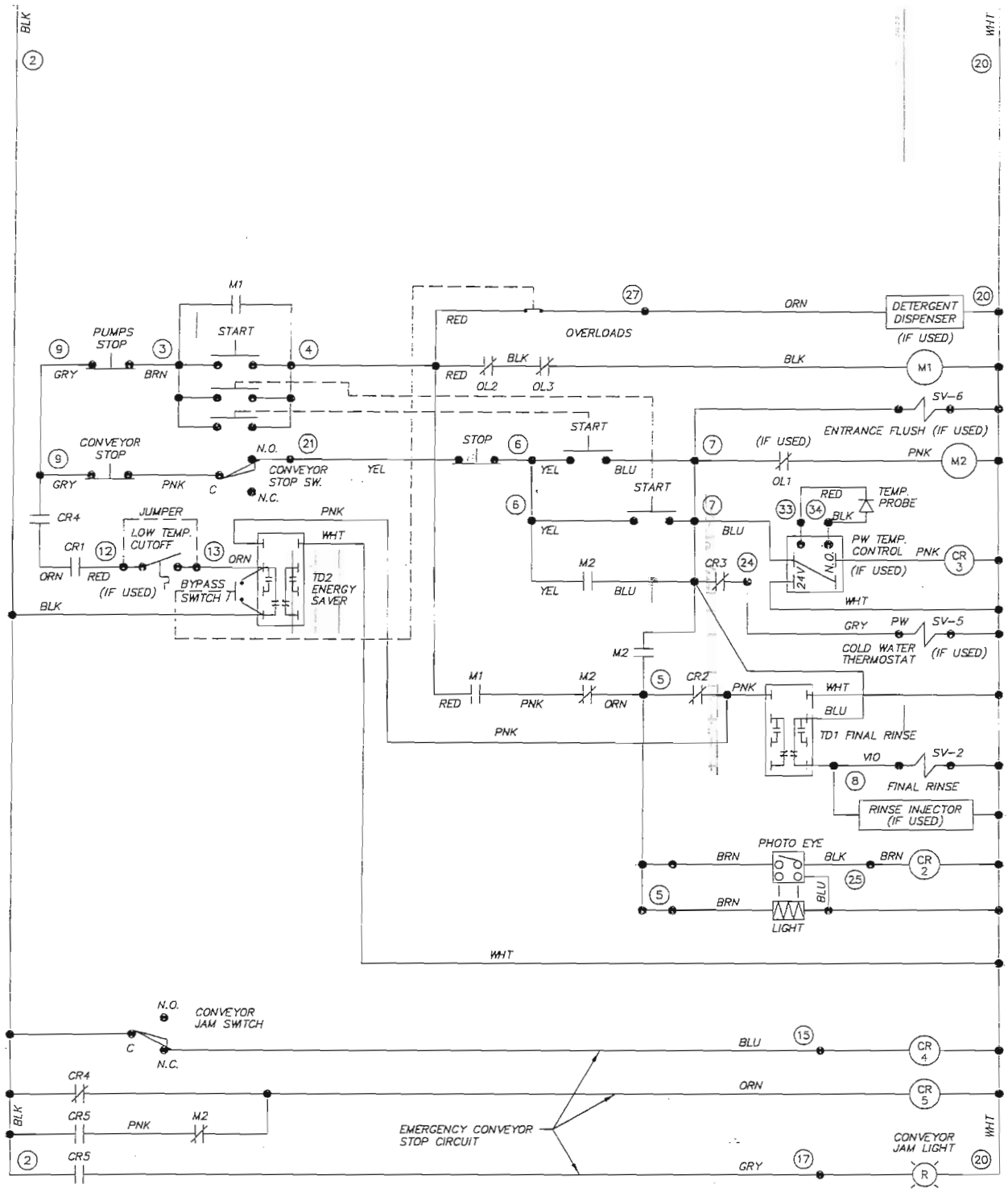

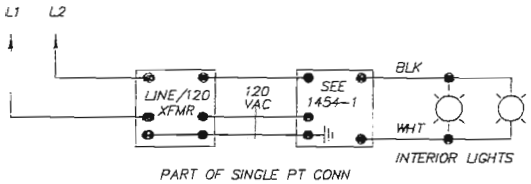

PART OF SINGLE PT CONN

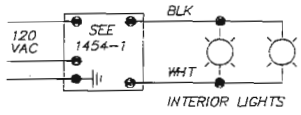

SEPARATE 120V SERVICE

REV	ECN NO	DATE
C	1927	3.25.02
B	1583	12.1.97
A	1549	5.20.97

FILE: WIRE\WDEF020

SHEET 2 OF 2

TITLE: DEFENDER ELECTRIC HEAT

DWG. NO. WDEF020

Insinger — Philadelphia, PA 19135 (215) 624-4800 FAX (215) 624-6966

DRWN/DATE MFJ 9.10.96

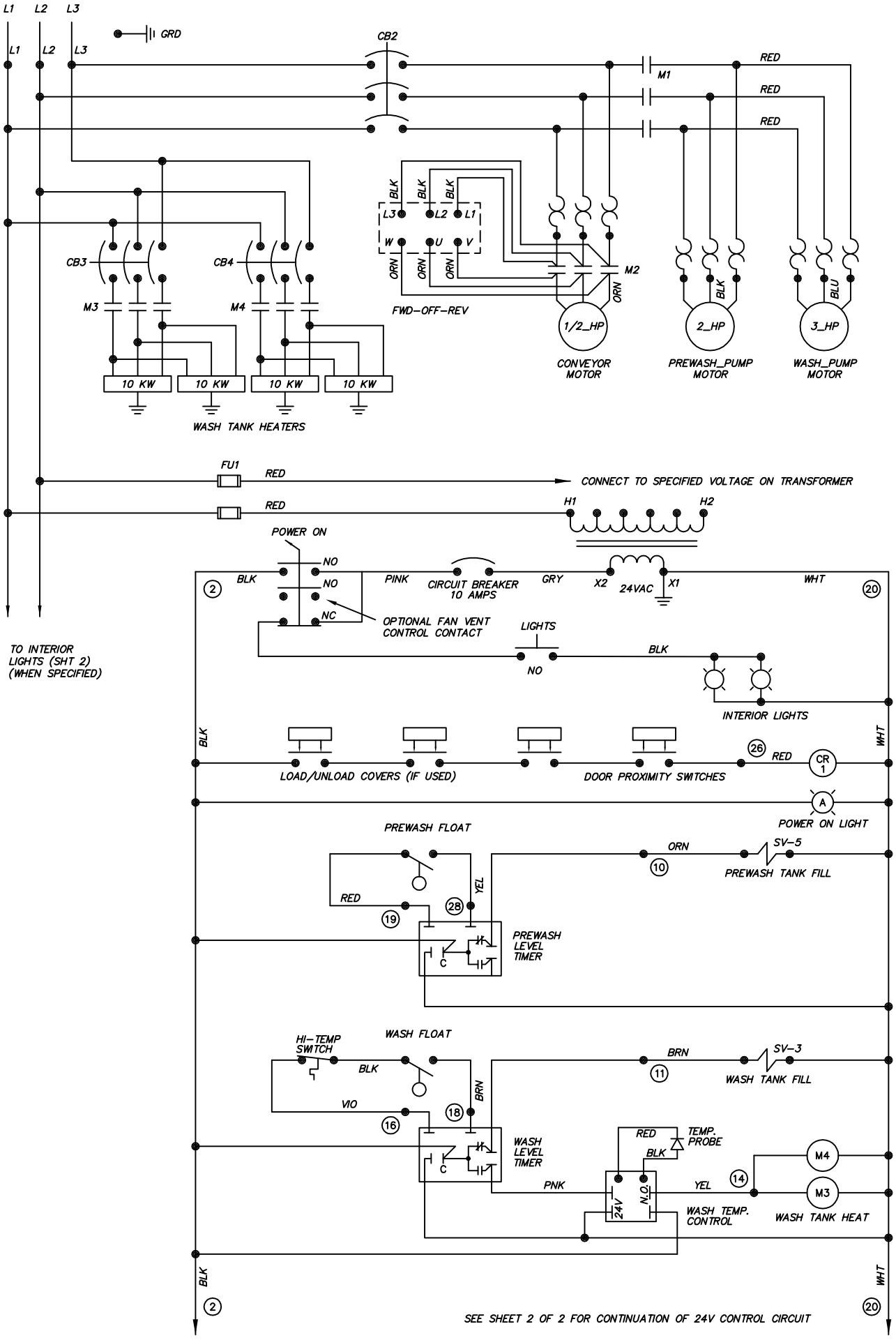

REV	ECN NO	DATE
C	–	10.15.24
B	2634	10.15.12
A	2132	2.27.08

FILE: WIRE\WDEF021

TITLE: DEFENDER ELECTRIC HEAT (CIRCUIT BRKRS)

DWG. NO. WDEF021

Insinger
Philadelphia, PA 19135
(215) 624-4800
FAX (215) 624-6966

DRWN/DATE MFJ 8.18.99

SHEET 1 OF 2

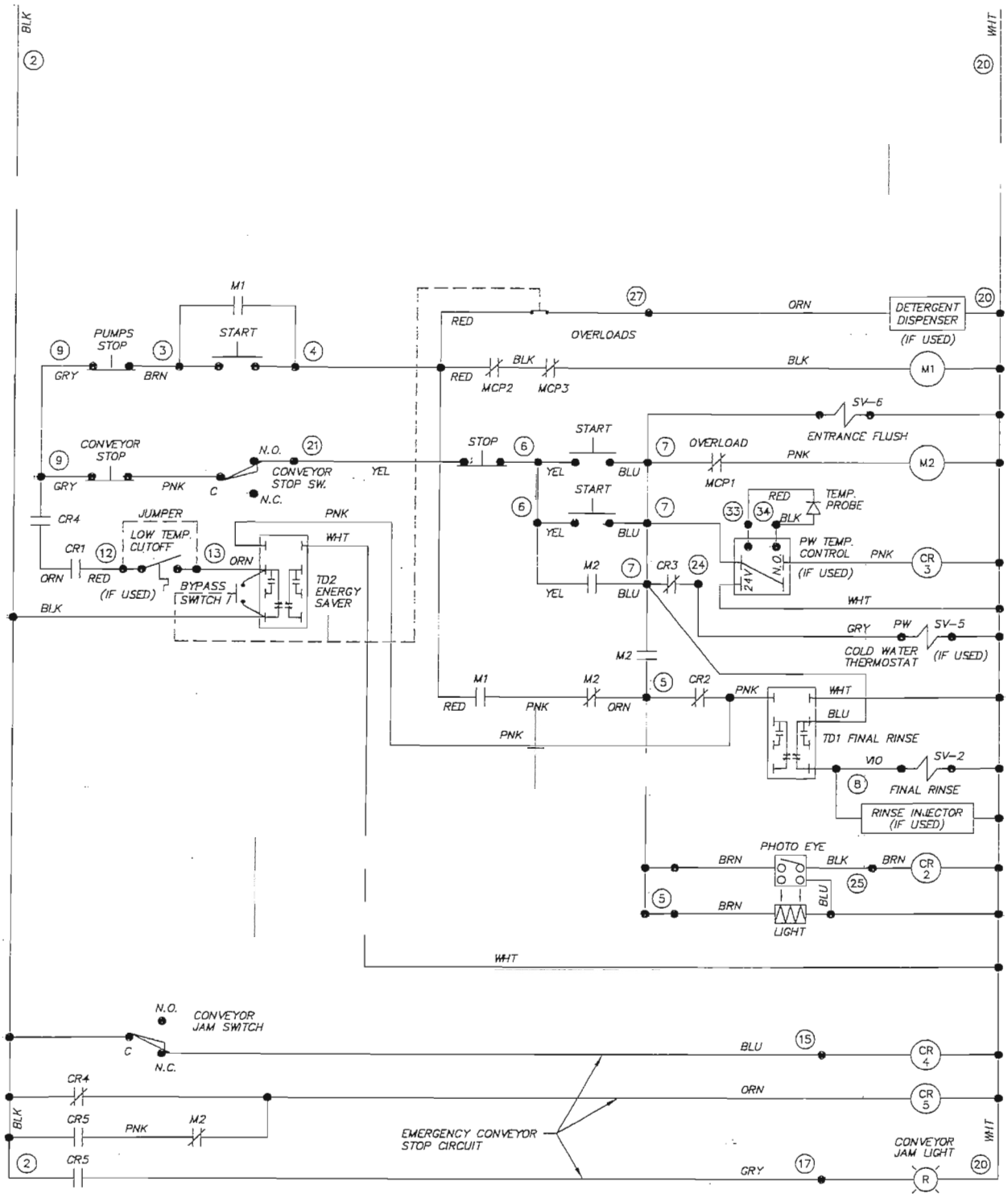

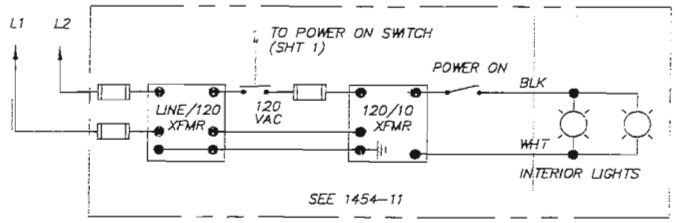

			TITLE DEFENDER ELECTRIC HEAT (CIRCUIT BRKRS)		DWG. NO. WDEF021
REV	ECN NO	DATE	Insinger Machine Company	Philadelphia, PA 19135 (215) 624-4800 FAX (215) 624-6965	DRWN/DATE MFJ 8.18.99
SHEET 2 OF 2	FILE: WIRE\WDEF021				

Insinger
Machine Company

PART 5

REPLACEMENT PARTS

FOR CENTURY 14

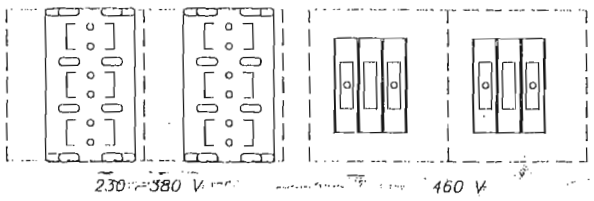

LOCATION OF ALTERNATE FUSEBLOCKS

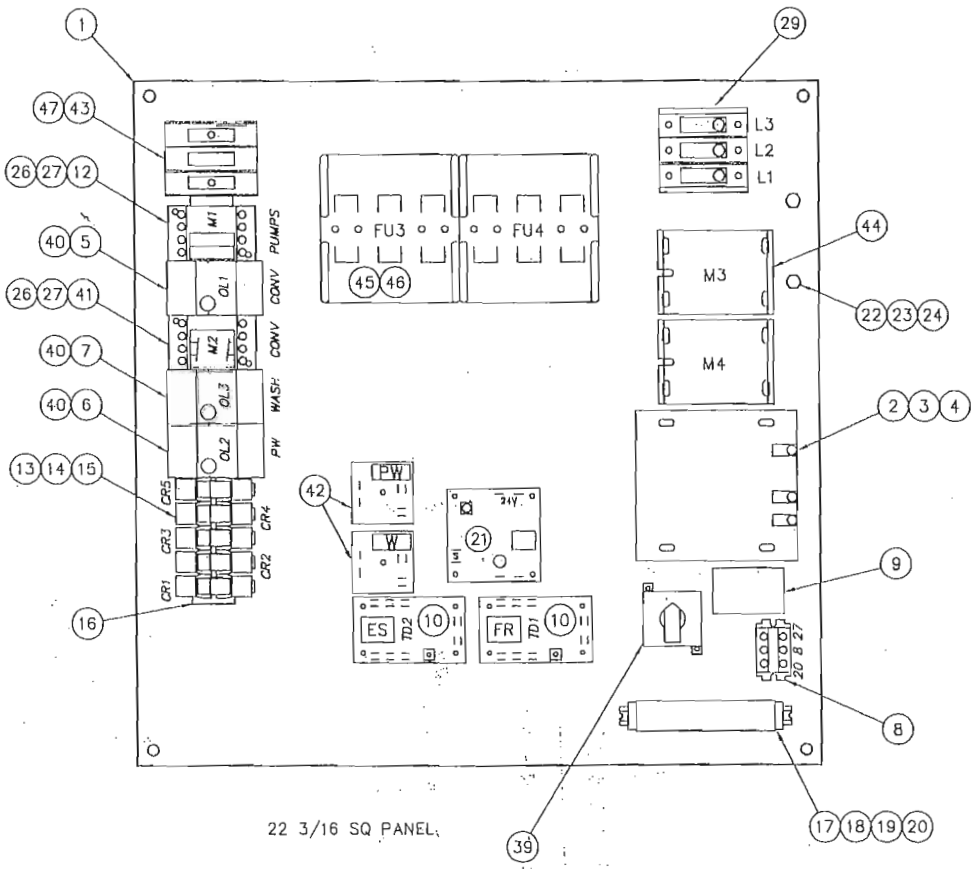

22 3/16 SQ PANEL

ITEM	DESCRIPTION		PART NO.	QTY
1	COMPONENT MOUNTING PLATE (22.18 SQ)		SK-4351	1
2	TRANSFORMER (250 VA, 24 VAC)		DE6-25	1
3	FUSE BLOCK KIT (250 VA XFMR)		DE9-165	1
4	FUSE (250 VA TRANSFORMER PRIMARY)			2
	460 V	FNQ-R-1.8	DE9-169	
	380 V	FNQ-R-2	DE9-170	
	220 - 230 V	FNQ-R-3.5	DE9-174	
	208 V	FNQ-R-4	DE9-175	
5	OVERLOAD RELAY (1/2 HP CONV DRIVE)			1
	460/3/60	1-1.6 A	DE2-50	
	380/3/50	1-1.6 A	DE2-50	
	230/3/60	1.6-2.5 A	DE2-52	
	208/3/60	1.6-2.5 A	DE2-52	
6	OVERLOAD RELAY (2 HP PW PUMP)			1
	460/3/60	2.5-4 A	DE2-53	
	380/3/50	2.5-4 A	DE2-53	
	230/3/60	5.5-8 A	DE2-55	
	208/3/60	5.5-8 A	DE2-55	
7	OVERLOAD RELAY (3 HP WASH PUMP)			1
	460/3/60	4-6 A	DE2-54	
	380/3/50	4-6 A	DE2-54	
	230/3/60	7-10 A	DE2-56	
	208/3/60	7-10 A	DE2-56	
8	TERMINAL BLOCK ASSY		DE3-9	1
9	CAUTION LABEL		SK-3451	1
10	TIMER (ENERGY SAVER & FINAL RINSE)		DE7-28	2
11				
12	CONTACTOR (PUMPS)			1
	380 - 460 V	SP4	DE1-93	
	208 - 230 V	SP17	DE1-56AE	
13	RELAY BASE		DE2-37	AR
14	RELAY		DE2-38	AR
15	RELAY HOLD DOWN SPRING		DE3-43	AR

SHEET 1 OF 2

TITLE DEFENDER
ELECT HEAT, NEMA 4X CONTROL PANEL

Insinger
Philadelphia, PA 19135
(215) 624-4800
FAX (215) 624-6966

DRWN/DATE MFJ 2.5.97

FILE: SKETCH\SK-3963

REV	ECN NO	DATE
G	1945	7.17.02
F	1857	2.15.01

SCALE 1/4

DWG. NO. SK-3963

ITEM	DESCRIPTION	PART NO.	QTY
16	DIN RAIL (35 mm)	DE9-216	1
17	DIN RAIL (15 mm)	DE3-42	1
18	TERMINAL SECTION	DE3-39	AR
19	TERMINAL END COVER PLATE	DE3-40	1
20	TERMINAL END CLAMP	DE3-41	2
21	TEMPERATURE CONTROL BOARD	DE9-251	AR
22	GROUNDING STUD	D309C-GC-4G	2
23	LOCKWASHER, 1/4"	D313C-G5	2
24	HEX NUT, 1/4-20	D312C-GC-2	2
25	CONTACT BLOCK, NC	DE5-42AE	1
26	AUX CONTACT NC	DE1-61AE	AR
27	AUX CONTACT NO	DE1-62AE	AR
28	CIRCUIT BREAKER (10A)	DE9-106	1
29	POWER DIST BLOCK	DE3-152	1
30	SELECTOR SWITCH ASSY	DE8-54	2
31	CONTACT BLOCK, NO	DE5-41AE	1
32	PILOT LIGHT ASSY - YELLOW	DE8-53	1

ITEM	DESCRIPTION		PART NO.	QTY
33	PILOT LIGHT ASSY - RED		DE8-52	1
34	PUSHBUTTON ASSY, START-STOP		DE5-32SQ	1
35	CONTACT BLK, NO/NC		DE5-46SQ	1
36	CONTROL BOX, 24 X 24 X 8		DE9-249	1
37	DECAL		SK-3799	1
38	DATA DECAL		SK-3715	1
39	SWITCH (FWD - OFF - REV)		DE8-56	1
40	OVERLOAD BASE		DE2-60	3
41	CONTACTOR (CONVEYOR)	SP4	DE1-93	1
42	TIMER (LIQUID LEVEL)		DE7-35	2
43	FUSE (MTR CIRCUIT)			3
	460 V	FNQ-R-15	DE9-183	
	380 V	FNQ-R-15	DE9-183	
	230 V	FNQ-R-25	DE9-220	
	208 V	FNQ-R-30	DE9-227	

ITEM	DESCRIPTION		PART NO.	QTY
44	CONTACTOR (40 KW ELECT WASH TANK HEAT ONLY)			2
	460/3/60	30 A RES	DE1-109	
	380/3/50	50 A RES	DE1-110	
	230/3/60	65 A RES	DE1-111	
	208/3/60	65 A RES	DE1-111	
45	FUSEBLOCK			2
	460 V		DE9-186	
	380 & 230 V		DE9-212	
	208 V		DE9-213	
46	FUSE			6
	460 V	KTK-R-30	DE9-189	
	380 V	JJS-40	DE9-209	
	230 V	JJS-60	DE9-210	
	208 V	JJN-70	DE9-211	
47	FUSEBLOCK (3 POLE MTR CIRCUIT)		DE9-186	1

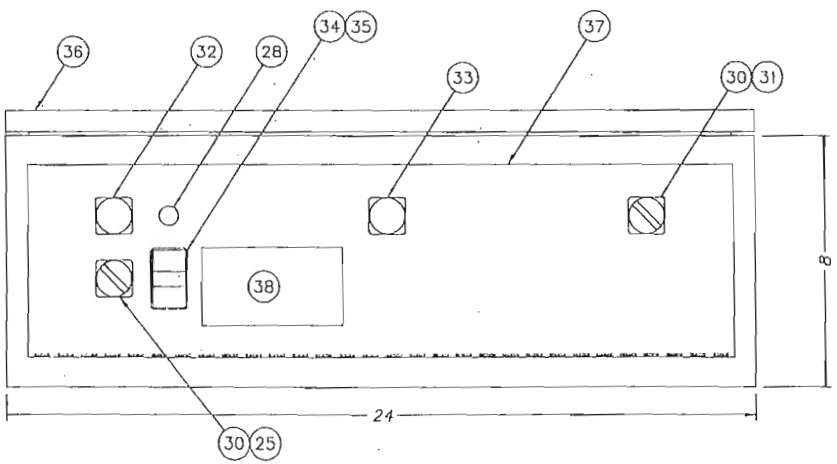

NOT SHOWN

ELECTRIC IMMERSION HEATER (10 KW)		4
440-480 V, 3 PH	DE13-SF73	
380 V, 3 PH	DE13-SF53	
220-240 V, 3 PH	DE13-SF43	
208V, 3PH	DE13-SF23	
TEMPERATURE SENSOR	DE9-252	AR

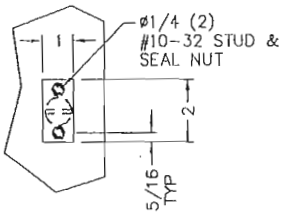

16 GA SECURITY PLATE
(OVER LATCH)

SHEET 2 OF 2

TITLE	DEFENDER ELECT HEAT, NEMA 4X CONTROL PANEL			
Insinger	Philadelphia, PA 19135 (215) 624-4800 FAX (215) 624-6966		DRWN/DATE MFJ 2.5.97	
			FILE: SKETCH\SK-3963	
G	1945	7.17.02	SCALE 1/4	DWG. NO. SK-3963
F	1857	2.15.01		
REV	ECN NO	DATE		

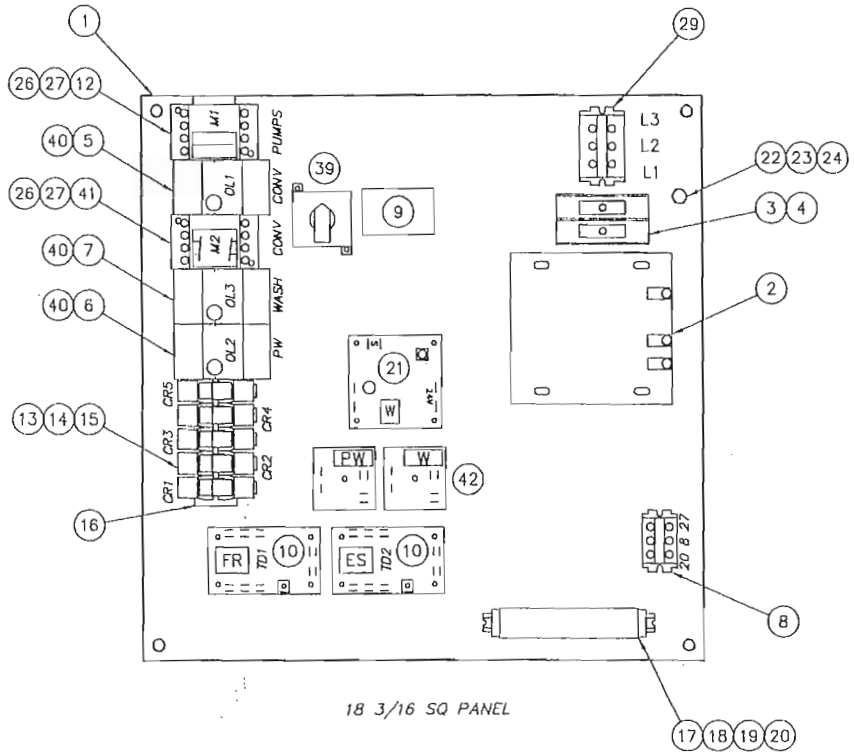

18 3/16 SQ PANEL

ITEM	DESCRIPTION		PART NO.	QTY
1	COMPONENT MOUNTING PLATE		SK-4354	1
2	TRANSFORMER (250 VA, 24 VAC)		DE6-25	1
3	FUSE BLOCK, 2 POLE (250 VA XFMR)		DE9-185	1
4	FUSE (250 VA TRANSFORMER PRIMARY)			2
	460 V	FNQ-R-1.8	DE9-169	
	380 V	FNQ-R-2	DE9-170	
	220 - 230 V	FNQ-R-3.5	DE9-174	
	208 V	FNQ-R-4	DE9-175	
5	OVERLOAD RELAY (1/2 HP CONV DRIVE)			1
	460/3/60	1-1.6 A	DE2-50	
	380/3/50	1-1.6 A	DE2-50	
	230/3/60	1.6-2.5 A	DE2-52	
	208/3/60	1.6-2.5 A	DE2-52	
6	OVERLOAD RELAY (2 HP PW PUMP)			1
	460/3/60	2.5-4 A	DE2-53	
	380/3/50	2.5-4 A	DE2-53	
	230/3/60	5.5-8 A	DE2-55	
	208/3/60	5.5-8 A	DE2-55	
7	OVERLOAD RELAY (3 HP WASH PUMP)			1
	460/3/60	4-6 A	DE2-54	
	380/3/50	4-6 A	DE2-54	
	230/3/60	7-10 A	DE2-56	
	208/3/60	7-10 A	DE2-56	
8	TERMINAL BLOCK ASSY		DE3-9	1
9	CAUTION LABEL		SK-3451	1
10	TIMER (ENERGY SAVER & FINAL RINSE)		DE7-28	2
11				
12	CONTACTOR (PUMPS)			1
	380 - 460 V	SP4	DE1-93	
	208 - 230 V	SP17	DE1-56AE	
13	RELAY BASE		DE2-37	AR
14	RELAY		DE2-38	AR
15	RELAY HOLD DOWN SPRING		DE3-43	AR

SHEET 1 OF 2

TITLE DEFENDER
STEAM HEAT, NEMA 4X CONTROL PANEL

Insinger
Philadelphia, PA 19135
(215) 624-4800
FAX (215) 624-6966

DRWN/DATE MFJ 12.23.96

REV	ECN NO	DATE
F	1945	7.17.02
E	1857	2.15.01
D	1728	1.7.00

FILE: SKETCH\SK-3954
SCALE 1/4
DWG. NO. SK-3954

ITEM	DESCRIPTION	PART NO.	QTY
16	DIN RAIL (35 mm)	DE9-216	1
17	DIN RAIL (15 mm)	DE3-42	1
18	TERMINAL SECTION	DE3-39	AR
19	TERMINAL END COVER PLATE	DE3-40	1
20	TERMINAL END CLAMP	DE3-41	2
21	TEMPERATURE CONTROL BOARD	DE9-251	1
22	GROUNDING STUD	D309C-GC-4G	1
23	LOCKWASHER, 1/4"	D313C-G5	1
24	HEX NUT, 1/4-20	D312C-GC-2	1
25	CONTACT BLOCK, NC	DE5-42AE	1
26	AUX CONTACT NC	DE1-61AE	AR
27	AUX CONTACT NO	DE1-62AE	AR
28	CIRCUIT BREAKER (10A)	DE9-106	1
29	TERMINAL BLOCK	DE3-3	1
30	SELECTOR SWITCH ASSY	DE8-54	2
31	CONTACT BLOCK, NO	DE5-41AE	1
32	PILOT LIGHT ASSY - YELLOW	DE8-53	1

ITEM	DESCRIPTION		PART NO.	QTY
33	PILOT LIGHT ASSY - RED		DE8-52	1
34	PUSHBUTTON ASSY, START-STOP		DE5-32SQ	1
35	CONTACT BLK, NO/NC		DE5-46SQ	1
36	CONTROL BOX, 20 X 20 X 6		DE9-245	1
37	DECAL		SK-3700	1
38	DATA DECAL		SK-3715	1
39	SWITCH (FWD - OFF - REV)		DE8-56	1
40	OVERLOAD BASE		DE2-60	3
41	CONTACTOR (CONVEYOR)	SP4	DE1-93	1
42	TIMER (LIQUID LEVEL)		DE7-35	2

NOT SHOWN:

TEMPERATURE SENSOR	DE9-252	AR

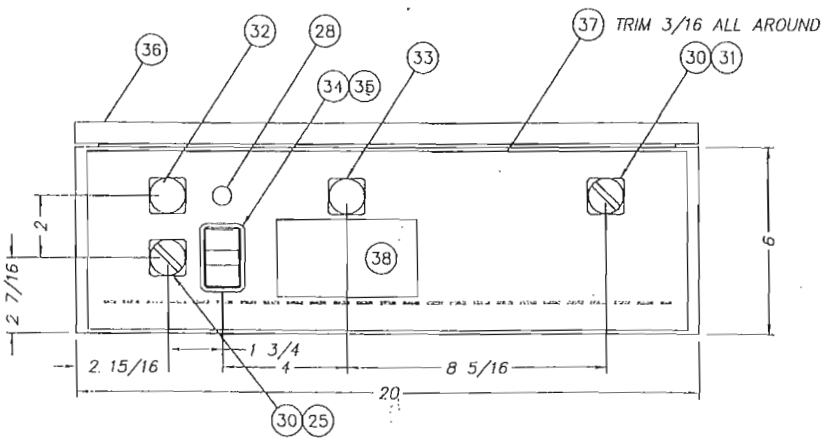

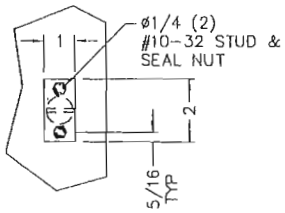

16 GA SECURITY PLATE
(OVER LATCH)

SHEET 2 OF 2

TITLE	DEFENDER STEAM HEAT, NEMA 4X CONTROL PANEL			
Insinger	Philadelphia, PA 19135 (215) 624-4800 FAX (215) 624-6966		DRWN/DATE MFJ 12.23.96	
F	1945	7.17.02	FILE: SKETCH\SK-3954	
E	1857	2.15.01	SCALE 1/4	DWG. NO. SK--3954
D	1728	1.7.00		
REV	ECN NO	DATE		

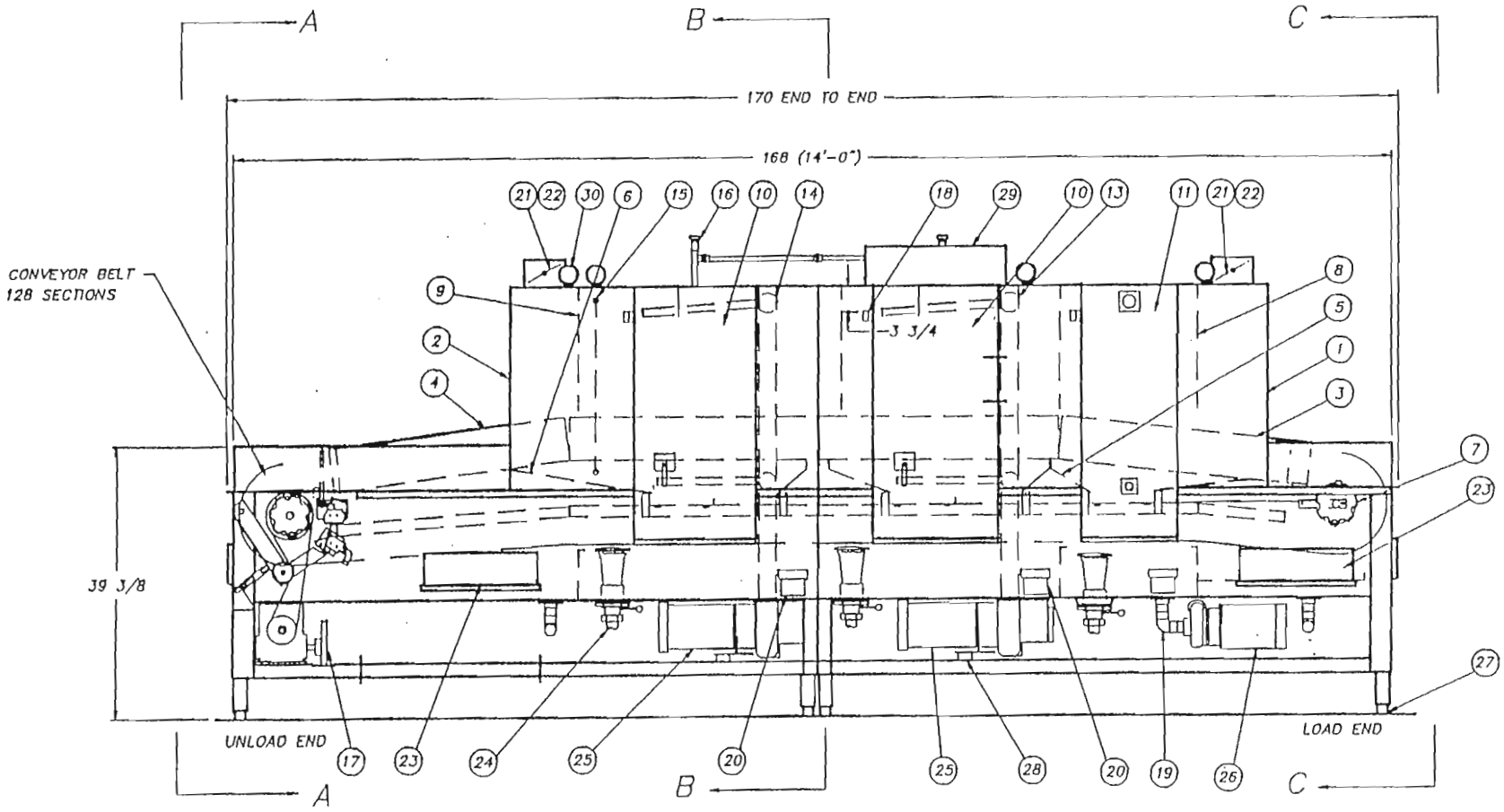

OPTION	DWG. NO.	SIZE
ELECTRIC HEATER LOCATIONS	1390-75	B
STEAM PIPING-WASH & RINSE TANKS	1390-74	B
STEAM PIPING-INJECTORS	1390-96	B
CLOSE-OFF PANELS	1390-81	B

SHEET 1 OF 3

REV	ECN NO	DATE
A	961	11.3.93

FILE: PARTS\1390-1

TOLERANCES
FRACTIONS ±1/64
DECIMALS
.XXX ± .005
.XX ± .01
ANGLES ±1/2°
UNLESS OTHERWISE SPECIFIED

TITLE: CENTURY 14 RPW-W R.H. MACHINE

NEXT ASSY
REQ'D 1

DWG. NO. 1390-1

MAT'L: NOTED

SCALE 1=16

USED ON

Insinger Machine Company
Philadelphia, PA 19135
(215) 624-4800
FAX (215) 624-6066

DRWN/DATE PG 4.19.93

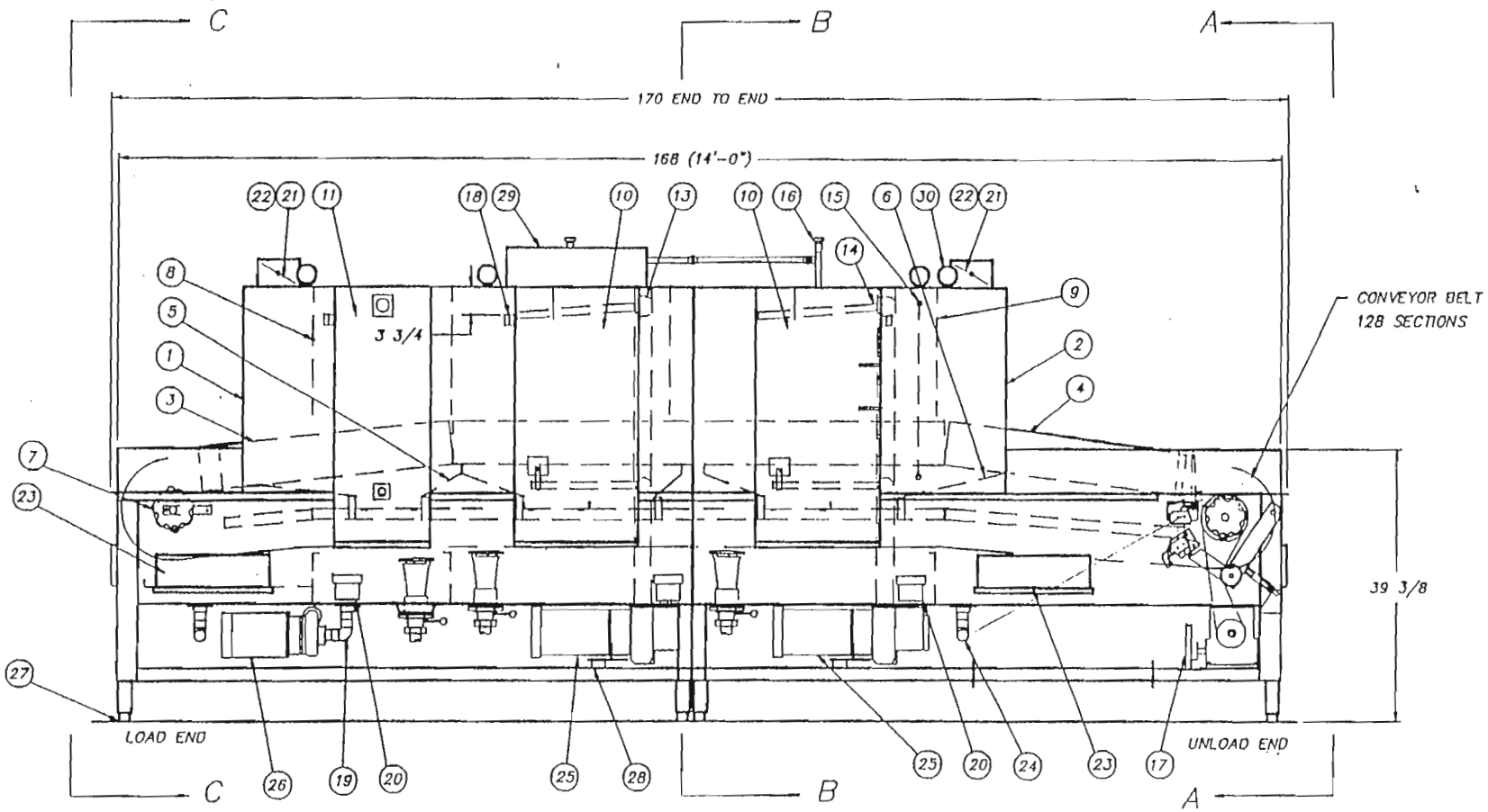

OPTION	DWG. NO.	SIZE
ELECTRIC HEATER LOCATIONS	1390-75	B
STEAM PIPING-WASH & RINSE TANKS	1390-74	B
STEAM PIPING-INJECTORS	1390-96	B
CLOSE-OFF PANELS	1390-81	B

SHEET 2 OF 3

REV	ECN NO	DATE
A	961	11.3.93

FILE: PARTS\1390-1

TOLERANCES
FRACTIONS ±1/64
DECIMALS
.XXX ± .005
.XX ± .01
ANGLES ±1/2°
UNLESS OTHERWISE SPECIFIED

TITLE	CENTURY 14 RPW-W L.H. MACHINE	NEXT ASSY	DWG. NO. 1390-1
		REQ'D 1	
MAT'L	NOTED	SCALE 1=16	USED ON
Insinger Machine Company	Philadelphia, PA 19135 (215) 624-4800 FAX (215) 624-6966		DRWN/DATE PG 4.10.93

ITEM	PART NO.	SIZE	DESCRIPTION	QTY.
30	1390-76	B	ACCESSORY LOCATIONS	1
31	1390-77	B	LABEL LOCATION	1
32	D3-727	A	ELECTRICAL CHANNEL	1
33	1390-81	B	CLOSE-OFF PANELS	1
34	1390-95	B	START/STOP STATION	1

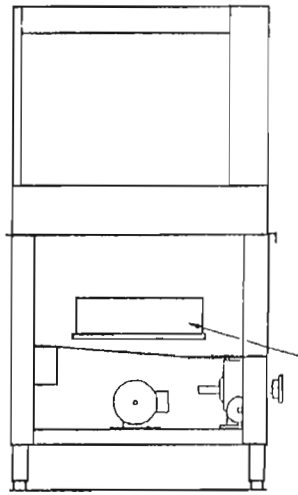

VIEW A-A

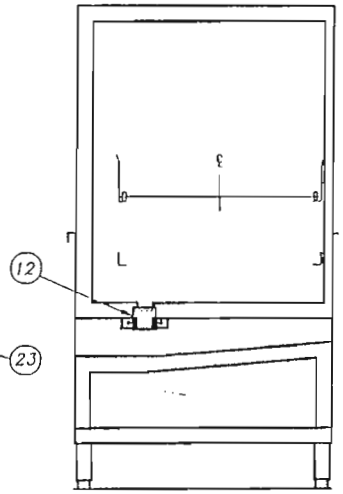

SECTION B-B

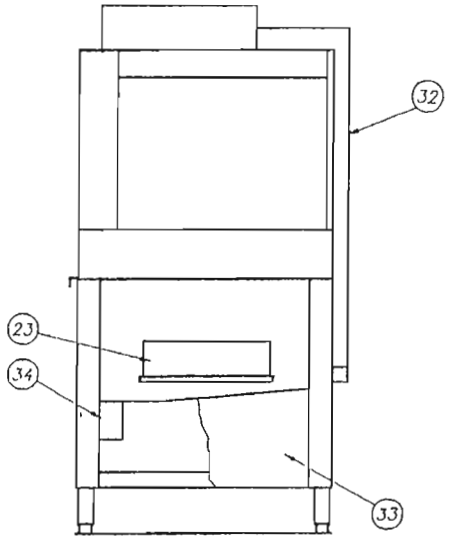

VIEW C-C

ITEM	PART NO.	SIZE	DESCRIPTION	QTY.
1	1390-2	B	SHELL ASSEMBLY, LOAD SECTION	1
2	1390-3	B	SHELL ASSEMBLY, UNLOAD SECTION	1
3	1390-4	B	TRACK INSTALLATION, LOAD SECTION	1
4	1390-5	B	TRACK INSTALLATION, UNLOAD SECTION	1
5	1390-6	B	BAFFLES & SCRAP SCREENS, LOAD SECTION	1
6	1390-7	B	BAFFLES SCRAP SCREENS, UNLOAD SECTION	1
7	1390-8	B	DRIVEN SHAFT ASSEMBLY	1
8	1390-9	B	CURTAIN & BAFFLE INSTALL. LOAD SECTION	1
9	1390-10	B	CURTAIN & BAFFLE INSTALL. UNLOAD SECTION	1
10	1390-31	A	DOOR 19"	2
11	1390-32	A	DOOR 15"	1
12	1390-49	B	WEIR PLATE INSTALL.	1
13	1390-56	B	DISCHARGE LINE ASSY. LOAD SECTION	1
14	1390-57	B	DISCHARGE LINE ASSY UNLOAD SECTION	1
15	1390-68	B	FINAL RINSE ASSEMBLY	1
16	1390-71	B	AUTO TANK FILL ASSEMBLY	1
17	1390-72	B	CONVEYOR DRIVE ASSEMBLY	1
18	D2715	A	DOOR LATCH	3
19	1182-13	A	SUCTION LINE, PREWASH	1
20	1100-76	A	PUMP SUCTION ASSEMBLY	2
21	D2-728	A	VENT DAMPER BLADE	2
22	D2-831	A	DAMPER ASSEMBLY	2
23	1100-94	A	TANK DOOR	4
24	1390-73	B	DRAIN ASSEMBLY	1
25	3075-K23	–	PUMP WASH, RINSE	2
26	3018-K188	–	PUMP PREWASH	1
27	D2587	A	ADJUSTABLE FOOT ASSY	8
28	D3-815	A	PUMP SPACER	4
29	1282-01	B	CONTROL BOX	1

BELT = 128 SECTIONS

SHEET 3 OF 3

REV	ECN NO	DATE
A	961	11.3.93

FILE: PARTS\1390-1

TOLERANCES
FRACTIONS ±1/64
DECIMALS
.XXX ± .005
.XX ± .01
ANGLES ±1/2°
UNLESS OTHERWISE SPECIFIED

TITLE: CENTURY 14 RPW-W R.H.MACHINE

NEXT ASSY

REQ'D 1

DWG. NO. 1390-1

MAT'L: NOTED

SCALE 1=16

USED ON

Insinger Machine Company
Philadelphia, PA 19135
(215) 624-4800
FAX (215) 624-6966

DRWN/DATE PC 4.19.93

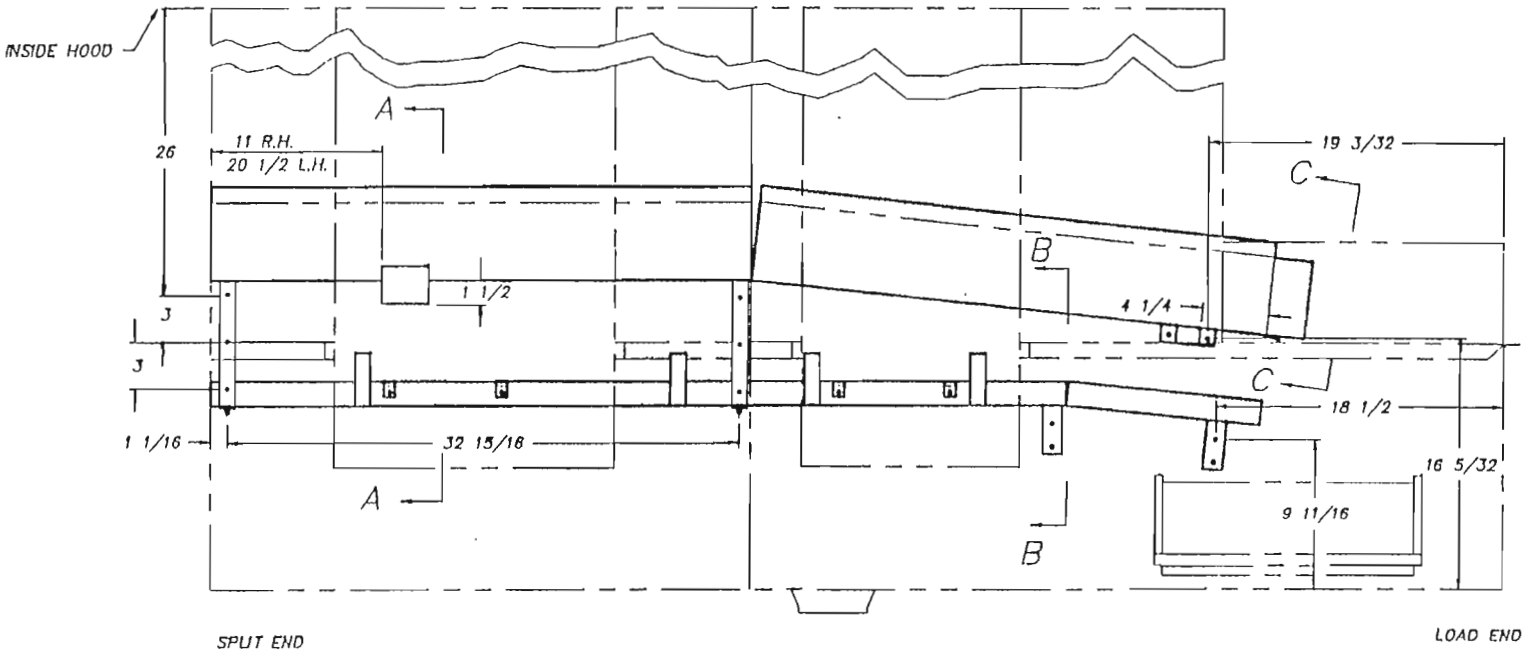

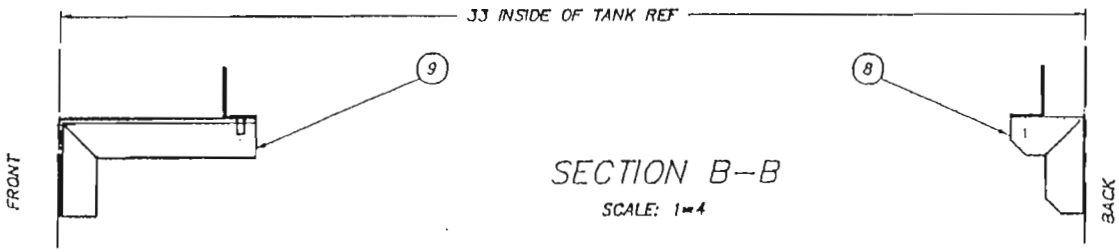

SECTION B–B

SCALE: 1=4

R.H. MACH. SHOWN L.H. MACH OPPOSITE

SHEET 1 OF 2

REV	ECN NO	DATE

FILE: PARTS\1390–4

TOLERANCES
FRACTIONS ±1/64
DECIMALS
.XXX ± .005
.XX ± .01
ANGLES ±1/2°
UNLESS OTHERWISE SPECIFIED

TITLE: TRACK INSTALLATION LOAD SECTION

NEXT ASSY: 1390–1
REQ'D: 1

DWG. NO.: 1390–4

MAT'L: NOTED

SCALE: 1=8

USED ON: CENTURY

Insinger Machine Company
Philadelphia, PA 19135
(215) 624–4800
FAX (215) 624–8986

DRWN/DATE: PG 3.25.93

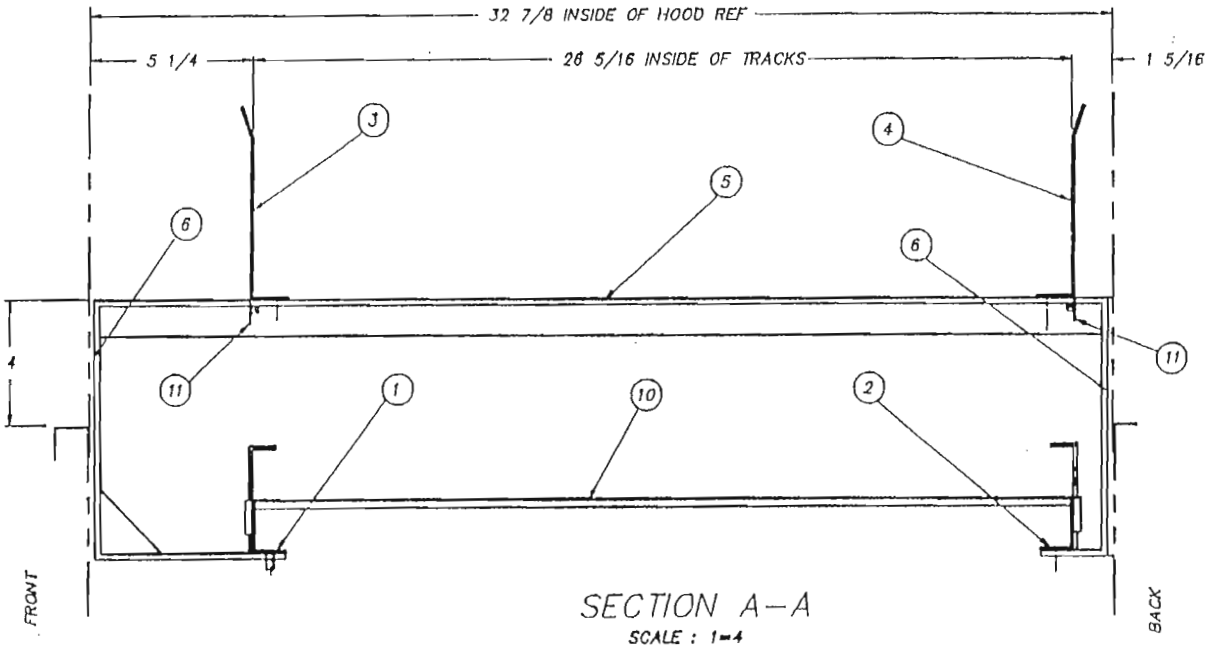

SECTION A–A
SCALE : 1=4

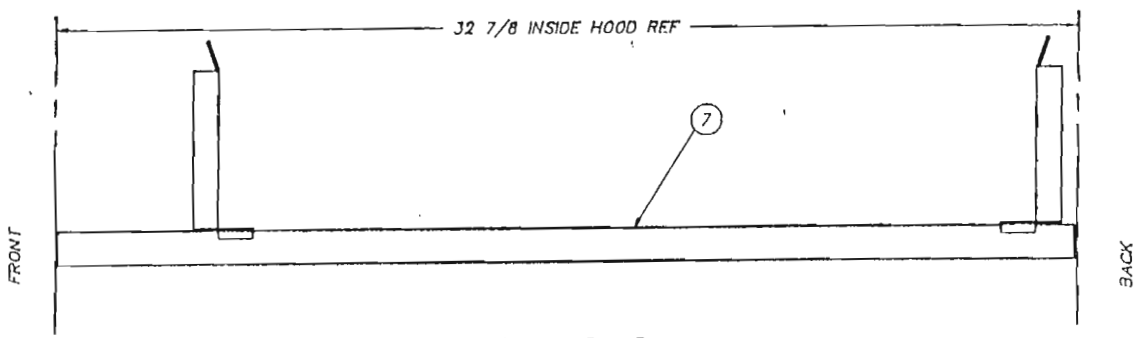

SECTION C–C
SCALE : 1=4

ITEM	PART NO.	SIZE	DESCRIPTION	QTY.
1	1390–39	B	TRACK LOWER–FRONT	1
2	1390–39	B	TRACK LOWER–BACK	1
3	1390–38	B	TRACK UPPER–FRONT	1
4	1390–36	B	TRACK UPPER–BACK	1
5	1100–50	B	TRACK SUPPORT	2
6	1100–50A	A	SHIM	4
7	1100–55	B	TRACK SUPPORT UPPER	1
8	1100–152	A	TRACK SUPPORT LOWER REAR	2
9	1100–56	A	TRACK SUPPORT LOWER FRONT	2
10	1100–58	A	SUPPORT BAR INSTALLATION	4
11	1390–70	A	CRADLE SUPPORT	2

R.H. MACH. SHOWN L.H. MACH. OPPOSITE

SHEET 2 OF 2

REV	ECN NO	DATE

FILE: PARTS\1390–4

TOLERANCES
FRACTIONS ±1/64
DECIMALS
.XXX ± .005
.XX ± .01
ANGLES ±1/2°
UNLESS OTHERWISE SPECIFIED

TITLE: TRACK INSTALLATION LOAD SECTION

NEXT ASSY: 1390–1
REQ'D: 1

DWG. NO.: 1390–4

MAT'L: NOTED

SCALE: 1=8

USED ON: CENTURY

Insinger Machine Company
Philadelphia, PA 19135
(215) 624–4800
FAX (215) 624–6966

DRWN/DATE: PG 3.25.93

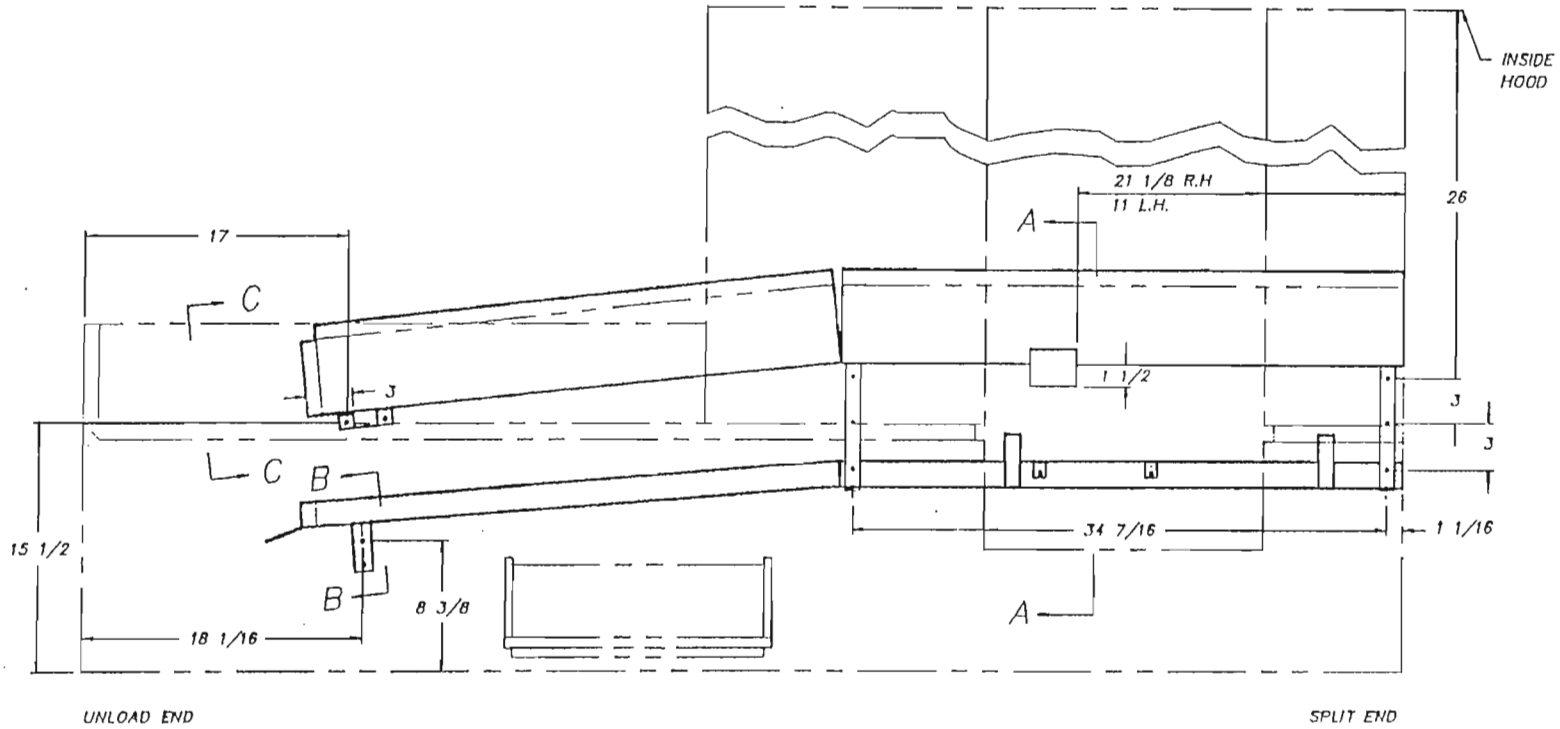

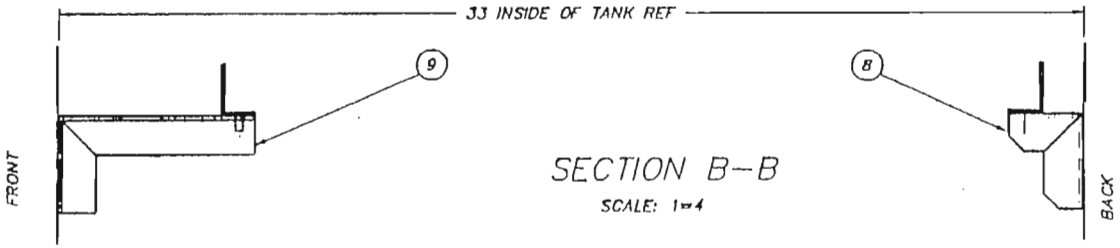

SECTION B–B

SCALE: 1=4

R.H. MACH. SHOWN L.H. MACH. OPPOSITE

SHEET 1 OF 2

REV	ECN NO	DATE

FILE: PARTS\1390–5

TOLERANCES
FRACTIONS ±1/64
DECIMALS
.XXX ± .005
.XX ± .01
ANGLES ±1/2°
UNLESS OTHERWISE SPECIFIED

TITLE: TRACK INSTALLATION UNLOAD SECTION

MAT'L: AS NOTED

NEXT ASSY: 1390–1
REQ'D: 1
SCALE: 1=8
DWG. NO.: 1390–5
USED ON: CENTURY
DRWN/DATE: PC 3.25.93

Insinger Machine Company
Philadelphia, PA 19135
(215) 624–4800
FAX (215) 624–6966

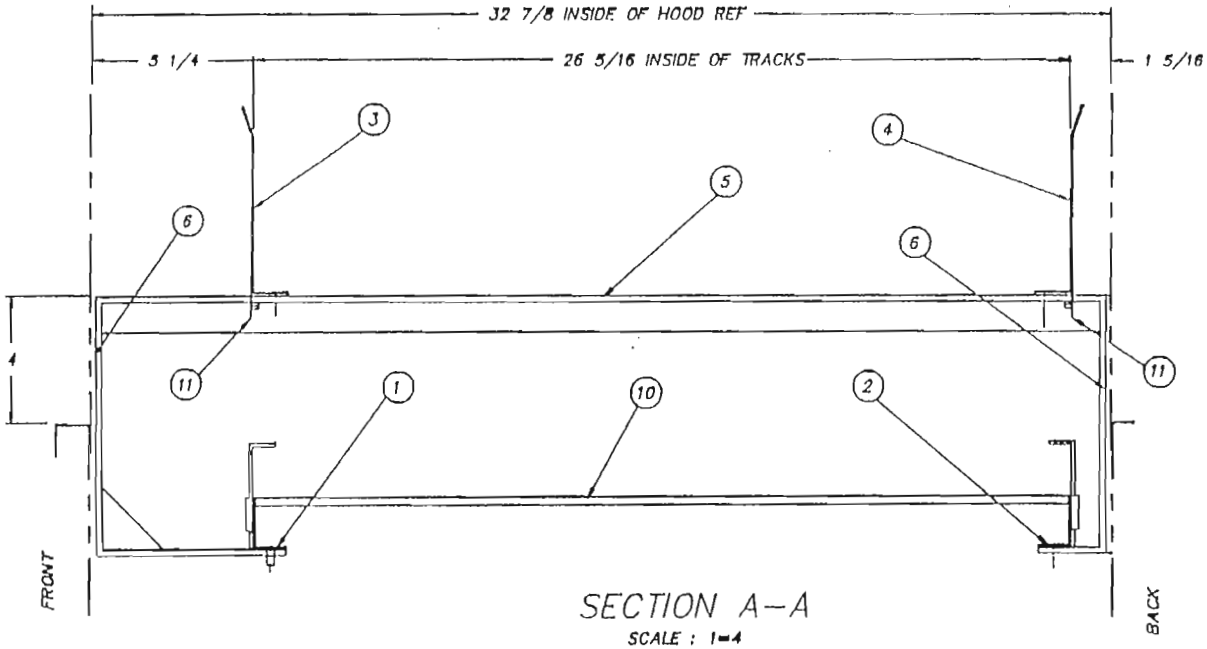

SECTION A–A
SCALE : 1=4

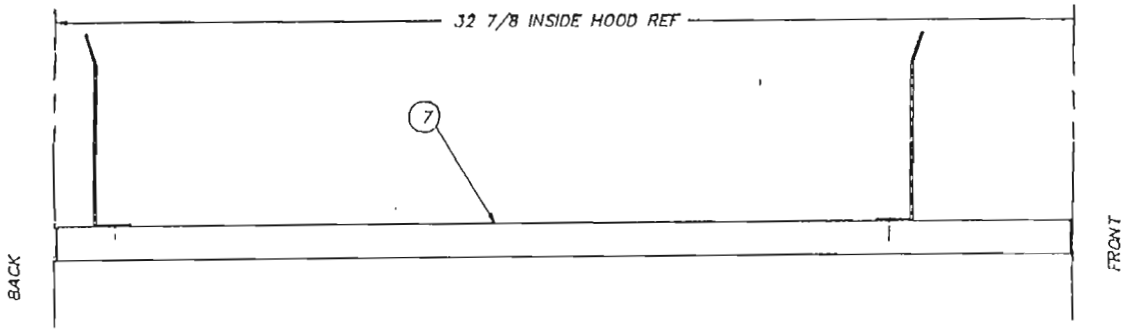

SECTION C–C
SCALE : 1=4

ITEM	PART NO.	SIZE	DESCRIPTION	QTY.
1	1390–40	B	TRACK LOWER–FRONT	1
2	1390–40	B	TRACK LOWER–BACK	1
3	1390–37	B	TRACK UPPER–FRONT	1
4	1390–37	A,B	TRACK UPPER–BACK	1
5	1100–50	B	TRACK SUPPORT	2
6	1100–50A	A	SHIM	4
7	1100–55	B	TRACK SUPPORT UPPER	1
8	1100–152	A	TRACK SUPPORT LOWER REAR	1
9	1100–56	A	TRACK SUPPORT LOWER FRONT	1
10	1100–58	A	SUPPORT BAR INSTALLATION	2
11	1390–70	A	CRADLE SUPPORT	2

SHEET 2 OF 2

REV	ECN NO	DATE

FILE: PARTS\1390–5

TOLERANCES
FRACTIONS ±1/64
DECIMALS
.XXX ± .005
.XX ± .01
ANGLES ±1/2°
UNLESS OTHERWISE SPECIFIED

TITLE: TRACK INSTALLATION UNLOAD SECTION

MAT'L: NOTED

NEXT ASSY: 1390–1
REQ'D: 1
SCALE: 1=8
USED ON: CENTURY
DWG. NO.: 1390–5
DRWN/DATE: PG 3.26.93

Insinger Machine Company
Philadelphia, PA 19135
(215) 624–4600
FAX (215) 624–6966

ITEM	PART NO.	SIZE	DESCRIPTION	QTY.
1	1390-42	A	BAFFLE	1
2	1390-43	A	BAFFLE	1
3	1390-44	A	BAFFLE	1
4	1390-45	A	BAFFLE	1
5	1100-61	A	SCRAP SCREEN	3
6	1390-46	B	SCRAP SCREEN	1
7	1100-37	A	SCRAP SCREEN	1
8	1390-47	A	SUPPORT RAIL	1
9	D309C-GP-6G	--	WELDSTUD 1/4 X 3/4 LG.	5

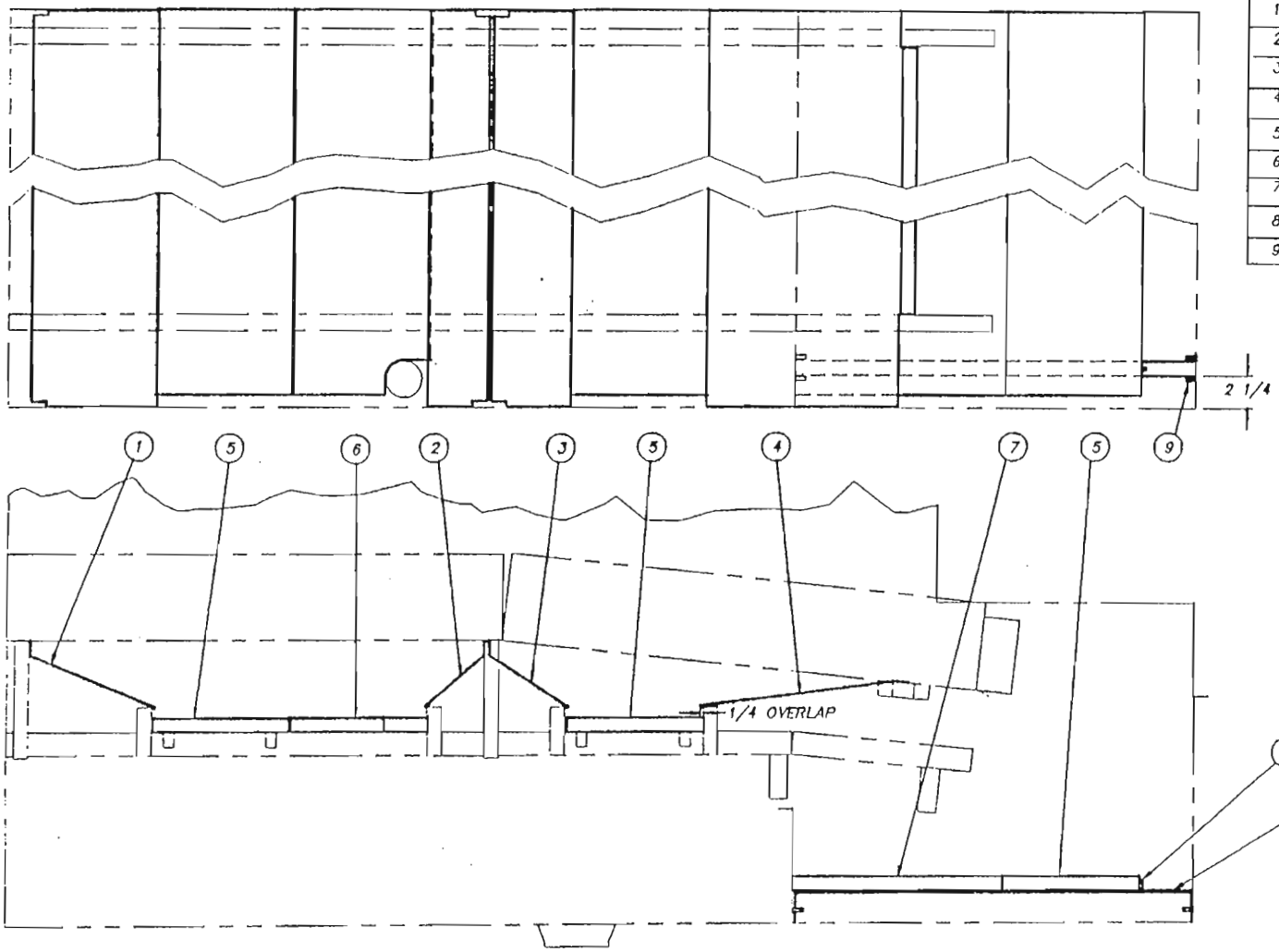

R.H. MACHINE SHOWN

SHEET 1 OF 2

REV	ECN NO	DATE

FILE: PARTS\1390-6

TOLERANCES
FRACTIONS ±1/64
DECIMALS
.XXX ± .005
.XX ± .01
ANGLES ±1/2°
UNLESS OTHERWISE SPECIFIED

TITLE: BAFFLES & SCRAP SCREEN LOAD SECTION

NEXT ASSY: 1390-1
REQ'D: 1

DWG. NO.: 1390-6

MATL.: NOTED

SCALE: 1=8

USED ON: CENTURY

Insinger Machine Company
Philadelphia, PA 19135
(215) 624-4600
FAX (215) 624-8966

DRWN/DATE: PG 3.30.93

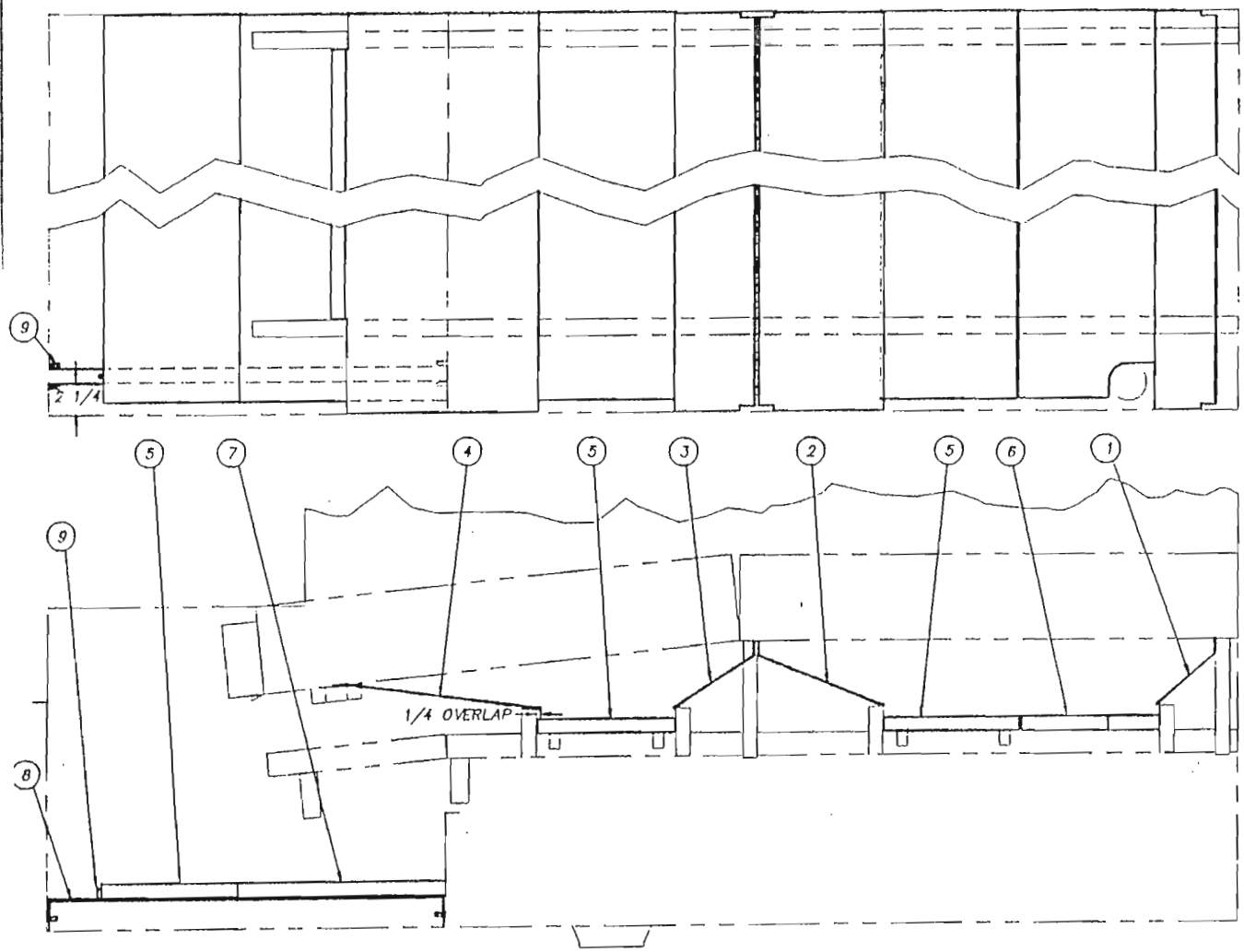

ITEM	PART NO.	SIZE	DESCRIPTION	QTY.
1	1390-43	A	BAFFLE	1
2	1390-42	A	BAFFLE	1
3	1390-44	A	BAFFLE	1
4	1390-45	A	BAFFLE	1
5	1100-61	A	SCRAP SCREEN	3
6	1390-46	B	SCRAP SCREEN	1
7	1100-37	A	SCRAP SCREEN	1
8	1390-47	A	SUPPORT RAIL	1
9	DJ09C-GP-6G	–	WELDSTUD 1/4 X 3/4 LG.	5

L.H. MACHINE SHOWN

SHEET 2 OF 2

REV	ECN NO	DATE

FILE: PARTS\1390-6

TOLERANCES
FRACTIONS ±1/64
DECIMALS
.XXX ± .005
.XX ± .01
ANGLES ±1/2°
UNLESS OTHERWISE SPECIFIED

TITLE: BAFFLES & SCRAP SCREEN
LOAD SECTION

NEXT ASSY: 1390-1
REQ'D: 1

DWG. NO.: 1390-6

MATL: NOTED

SCALE: 1=8

USED ON: CENTURY

Insinger Machine Company
Philadelphia, PA 19135
(215) 624-4800
FAX (215) 624-6966

DRWN/DATE: PG 3.30.93

ITEM	PART NO.	SIZE	DESCRIPTION	QTY.
1	1390-43	A	BAFFLE	1
2	1390-48	A	BAFFLE	1
3	1100-61	A	SCRAP SCREEN	1
4	1390-46	B	SCRAP SCREEN	1

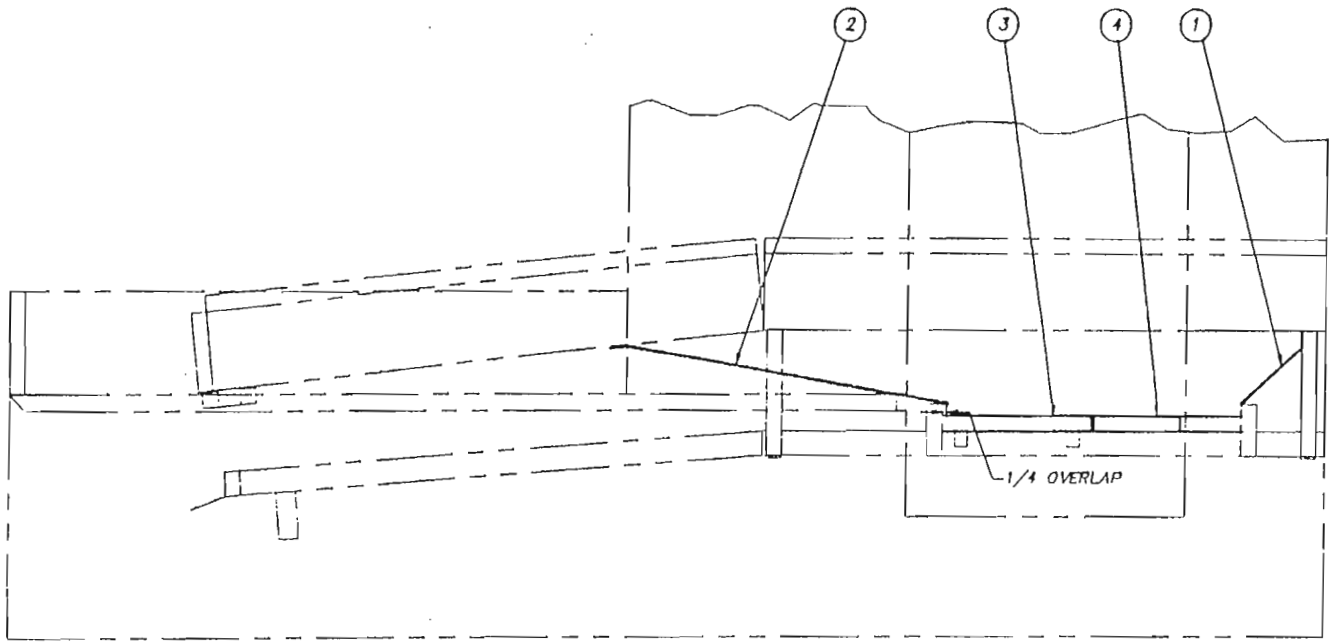

R.H. MACHINE SHOWN

SHEET 1 OF 2

REV	ECN NO	DATE

FILE: PARTS\1390-7

TOLERANCES
FRACTIONS ±1/64
DECIMALS
.XXX ± .005
.XX ± .01
ANGLES ±1/2°
UNLESS OTHERWISE SPECIFIED

TITLE: BAFFLES & SCRAP SCREEN UNLOAD SECTION

NEXT ASSY: 1390-1
REQ'D: 1

DWG. NO.: 1390-7

MAT'L: NOTED

SCALE: 1=8

USED ON: CENTURY

Insinger Machine Company
Philadelphia, PA 19135
(215) 624-4800
FAX (215) 624-6066

DRWN/DATE: PG 3.30.93

ITEM	PART NO.	SIZE	DESCRIPTION	QTY.
1	1390-42	A	BAFFLE	1
2	1390-79	A	BAFFLE	1
3	1100-61	A	SCRAP SCREEN	1
4	1390-46	B	SCRAP SCREEN	1

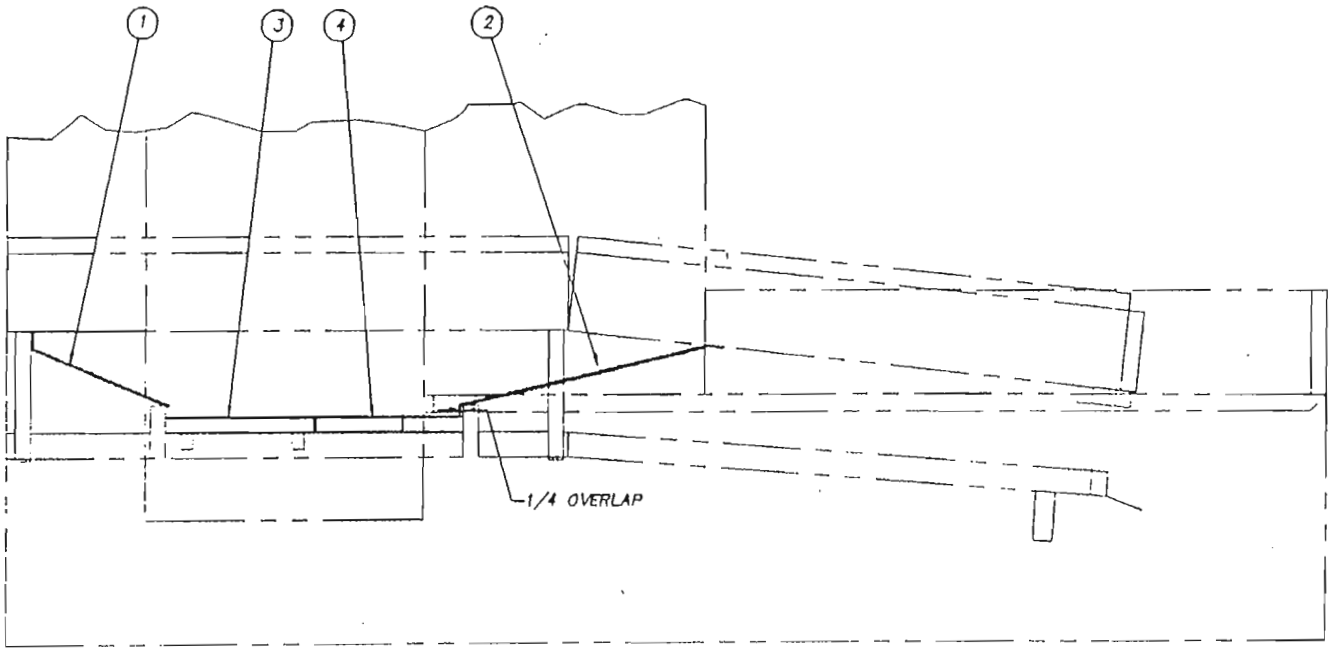

L.H. MACHINE SHOWN

SHEET 2 OF 2

REV	ECN NO	DATE

FILE: PARTS\1390-7

TOLERANCES
FRACTIONS ±1/64
DECIMALS
.XXX ± .005
.XX ± .01
ANGLES ±1/2°
UNLESS OTHERWISE SPECIFIED

TITLE: BAFFLES & SCRAP SCREEN UNLOAD SECTION

NEXT ASSY: 1390-1
REQ'D: 1

DWG. NO.: 1390-7

MAT'L: NOTED

SCALE: 1=8

USED ON: CENTURY

Insinger Machine Company
Philadelphia, PA 19135
(215) 624-4800
FAX (215) 624-6966

DRWN/DATE: PG 3.30.93

ITEM	PART NO.	SIZE	DESCRIPTION	QTY.
1	D2-138	A	SPROCKET- BELT	2
2	1100-146	A	SHAFT - DRIVEN	1
3	D2-848	A	COLLAR	4
4	1390-50	A	CHANNEL	2
5	D312C-GC-2	-	HEX NUT S/S 1/4-20	4
6	1390-51	A	ADJUSTING SCREW	2
7	D2-839	A	COLLAR	2
8	D-585	-	"O" RING (01-014)	2
9	D312C-LC-2	-	HEX NUT S/S 1/2-13	2

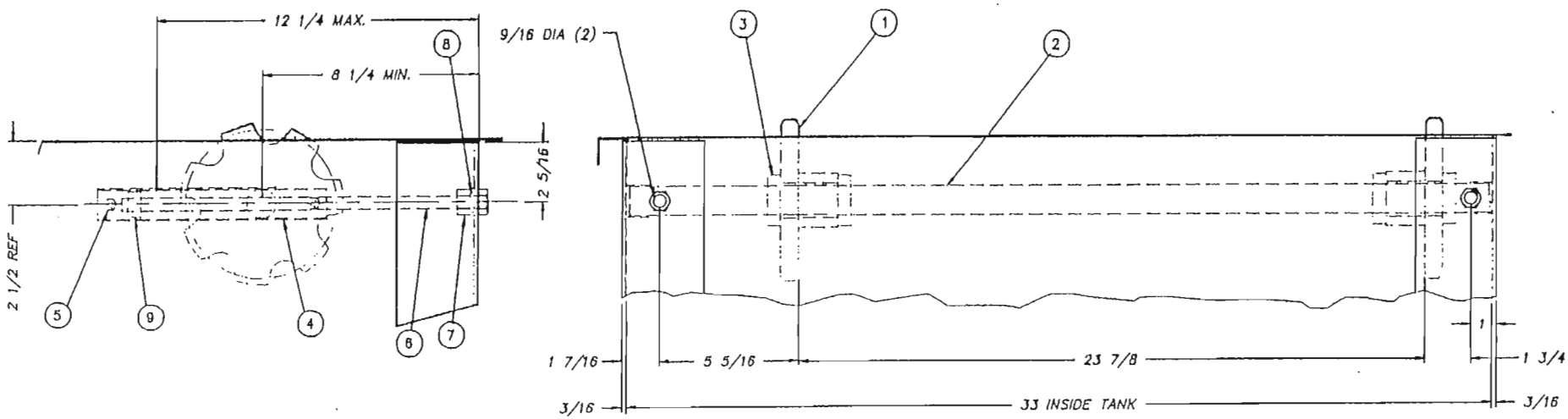

R.H. SHOWN - L.H. OPPOSITE

REV	ECN NO	DATE

FILE: PARTS\1390-8

TOLERANCES
FRACTIONS ±1/64
DECIMALS
.XXX ± .005
.XX ± .01
ANGLES ±1/2°
UNLESS OTHERWISE SPECIFIED

TITLE: DRIVEN SHAFT ASSEMBLY

MATL: NOTED

NEXT ASSY: 1390-1
REQ'D: 1
SCALE: 1=4

DWG. NO. 1390-8
USED ON CENTURY
DRWN/DATE PC 3.31.93

Insinger Machine Company
Philadelphia, PA 19135
(215) 624-4800
FAX (215) 624-6988

ITEM	PART NO.	SIZE	DESCRIPTION	QTY.
1	1390-53-1	A	TOP BAFFLE	1
2	1390-54	A	TOP BAFFLE	2
3	1390-52	A	SIDE BAFFLE	1
4	0-7618	A	CURTAIN ROD CLIP	8
5	D2-522-1	A	SPLASH GUARD CURTAIN	3
6	D2-522-3	A	SPLASH GUARD CURTAIN	1

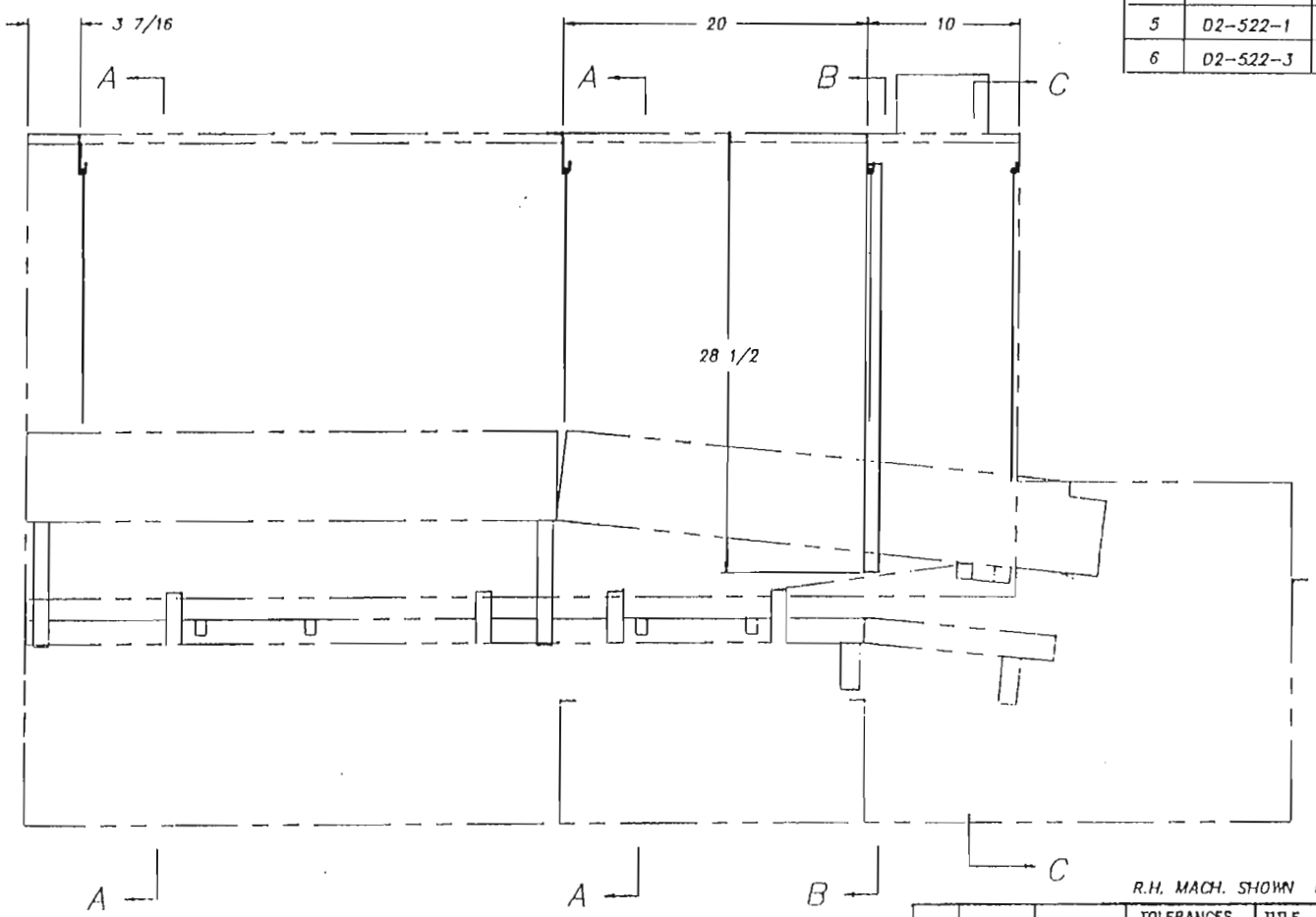

R.H. MACH. SHOWN L.H. MACH. OPPOSITE

SHEET 1 OF 2

REV	ECN NO	DATE
A	1004	4.25.94

FILE: PARTS\1390-9

TOLERANCES
FRACTIONS ±1/64
DECIMALS
.XXX ± .005
.XX ± .01
ANGLES ±1/2°
UNLESS OTHERWISE SPECIFIED

TITLE: CURTAIN & BAFFLE INSTALL. LOAD SECTION

NEXT ASSY: 1390-1
REQ'D: 1

DWG. NO.: 1390-9

MAT'L: NOTED

SCALE: 1=6

USED ON: CENTURY

Insinger Machine Company
Philadelphia, PA 19135
(215) 624-4600
FAX (215) 624-6866

DRWN/DATE: PG 4.1.93

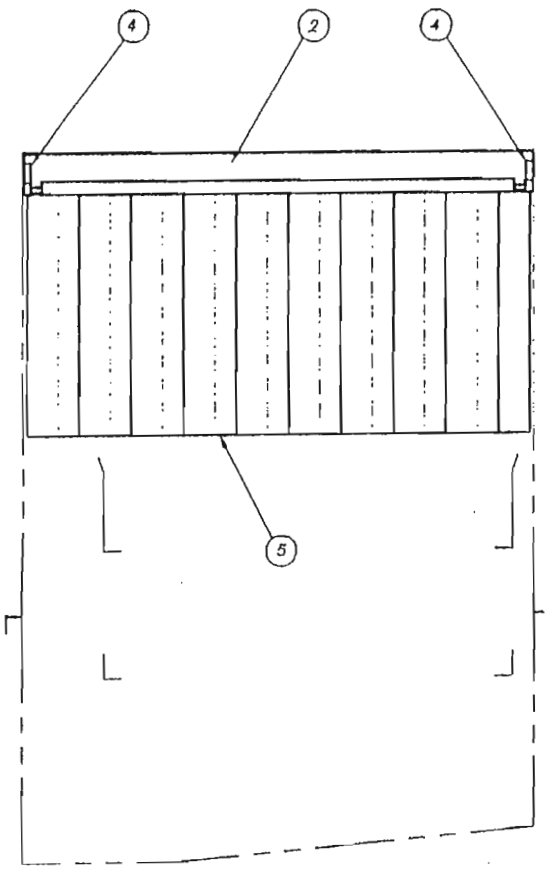

SECTION A–A

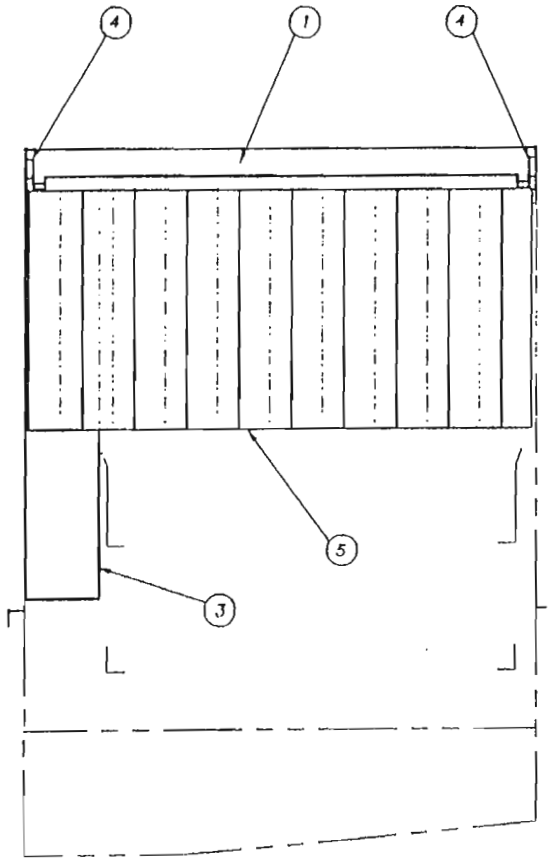

SECTION B–B

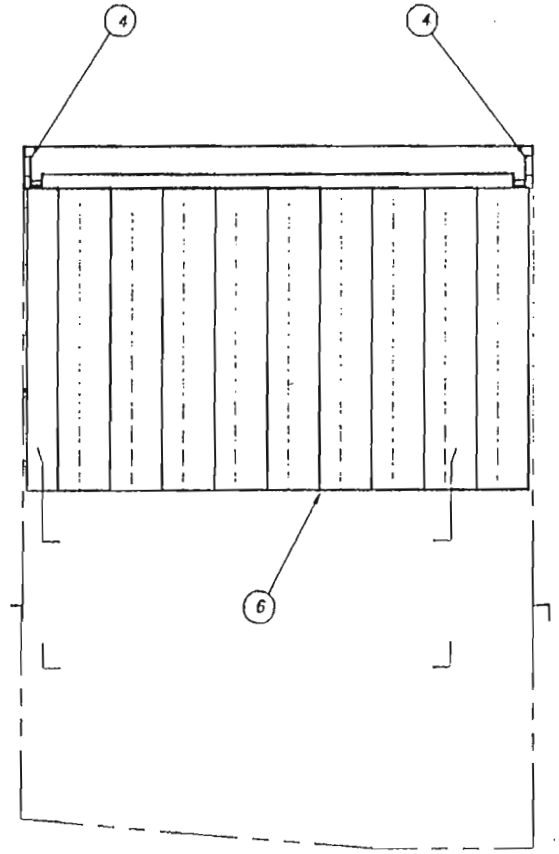

SECTION C–C

R.H. MACH. SHOWN L.H. MACH. OPPOSITE

SHEET 2 OF 2

REV	ECN NO	DATE
A	1004	4.25.94

FILE: PARTS\1390–9

TOLERANCES
FRACTIONS ±1/64
DECIMALS
.XXX ± .005
.XX ± .01
ANGLES ±1/2°
UNLESS
OTHERWISE
SPECIFIED

TITLE CURTAIN & BAFFLE INSTALL. LOAD SECTION

NEXT ASSY 1390–1

REQ'D 1

DWG. NO. 1390–9

MATL NOTED

SCALE 1=8

USED ON CENTURY

Insinger Machine Company
Philadelphia, PA 19135
(215) 624–4800
FAX (215) 624–6866

DRWN/DATE PG 4.1.03

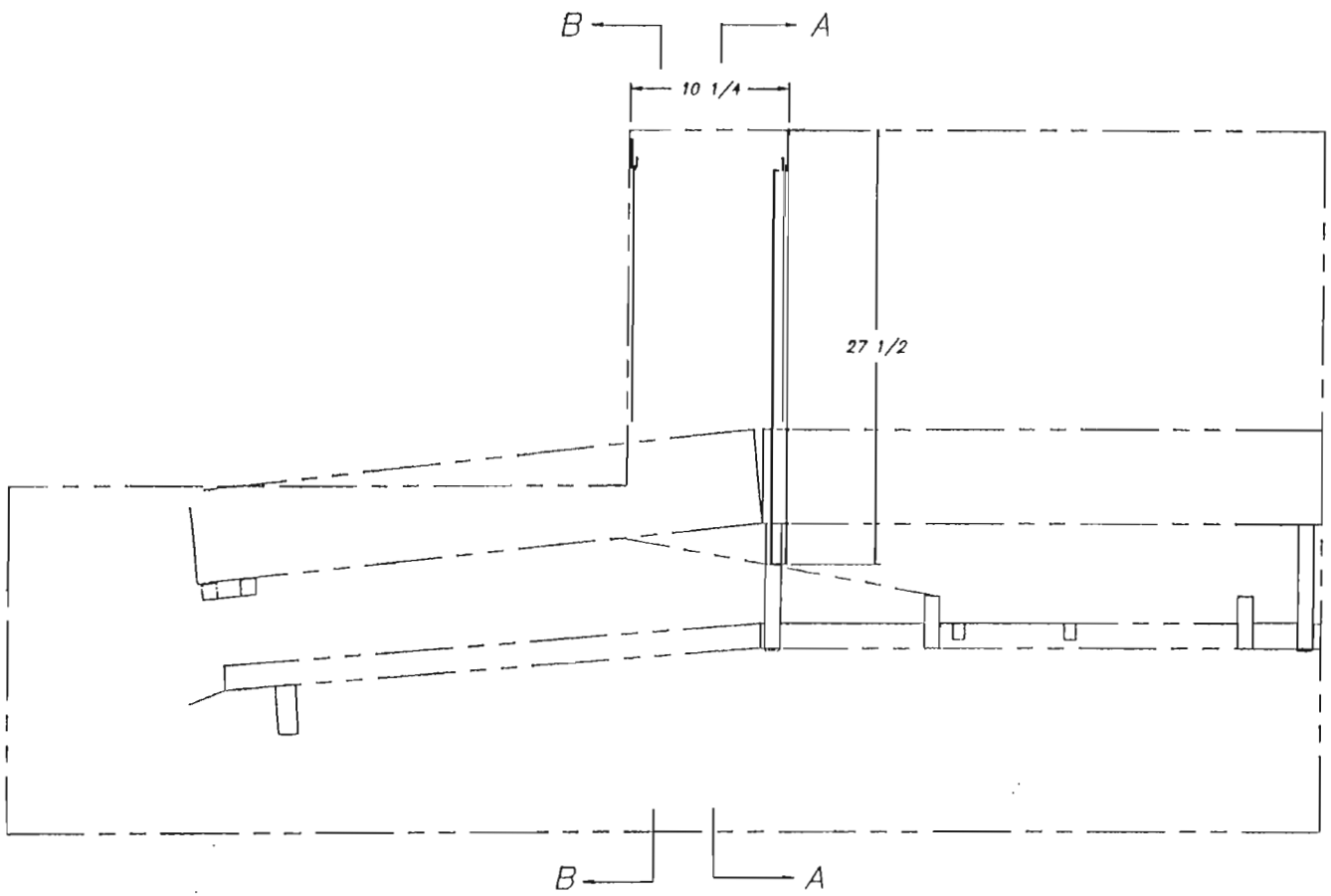

R.H. MACH. SHOWN L.H. MACH. OPPOSITE

SHEET 1 OF 2

			TOLERANCES	TITLE CURTAIN & BAFFLE INSTALLATION UNLOAD SECTION	NEXT ASSY 1390-1	DWG. NO.
			FRACTIONS ±1/64		REQ'D 1	1390-10
			DECIMALS .XXX ± .005 .XX ± .01	MAT'L AS NOTED	SCALE 1=8	USED ON CENTURY
A	1004	4.25.94	ANGLES ±1/2° UNLESS OTHERWISE SPECIFIED	Insinger Machine Company, Philadelphia, PA 19135, (215) 624-4800, FAX (215) 624-6866		DRWN/DATE PG 4.2.93
REV	ECN NO	DATE				
FILE: PARTS\1390-10						

ITEM	PART NO.	SIZE	DESCRIPTION	QTY.
1	1390-53-2	A	TOP BAFFLE	1
2	1390-55	A	SIDE BAFFLE	1
3	D-761B	A	CURTAIN ROD CLIP	4
4	D2-522-1	A	SPLASH GUARD CURTAIN	2

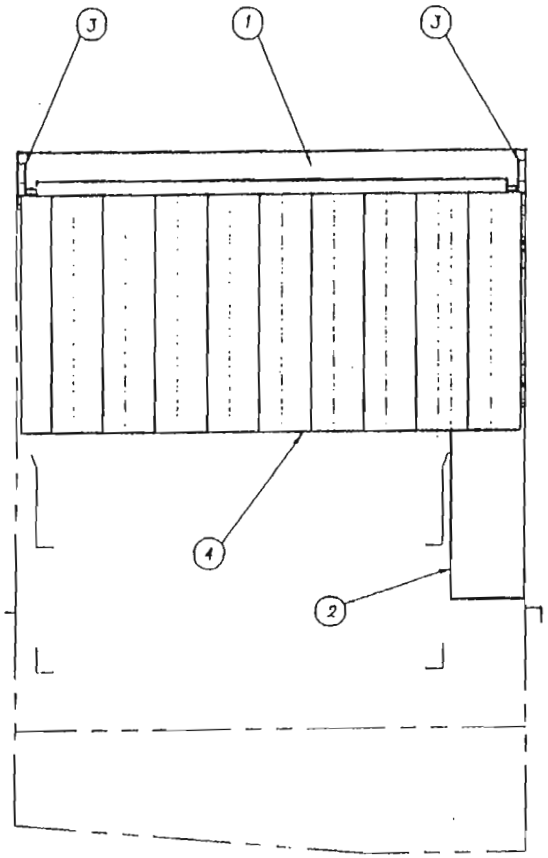

SECTION A-A

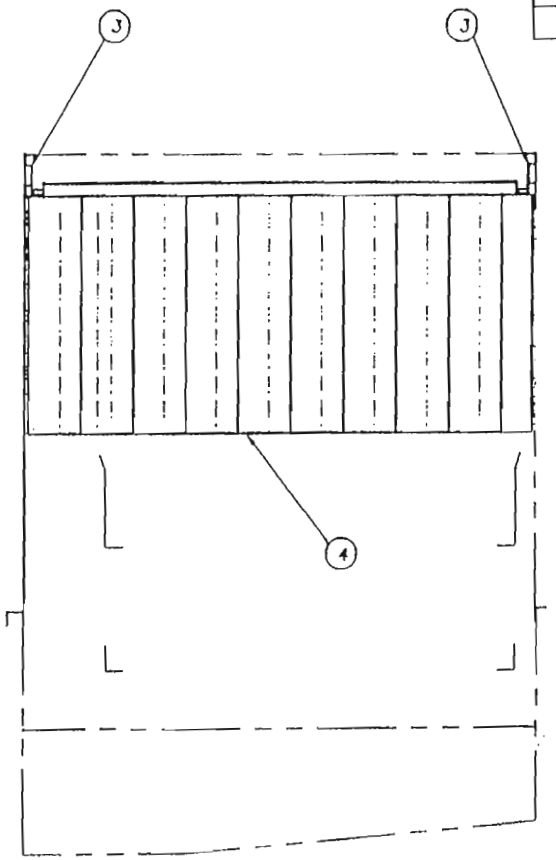

SECTION B-B

R.H. MACH. SHOWN L.H. MACH. OPPOSITE

SHEET 2 OF 2

REV	ECN NO	DATE
A	1004	4.25.94

FILE: PARTS\1390-10

TOLERANCES
FRACTIONS ±1/64
DECIMALS
.XXX ± .005
.XX ± .01
ANGLES ±1/2°
UNLESS OTHERWISE SPECIFIED

TITLE CURTAIN & BAFFLE INSTALLATION
UNLOAD SECTION

MAT'L AS NOTED

NEXT ASSY 1390-1
REQ'D 1
SCALE 1=8

DWG. NO. 1390-10
USED ON CENTURY
DRWN/DATE PG 4.2.93

Insinger Machine Company
Philadelphia, PA 19135
(215) 624-4800
FAX (215) 624-8866

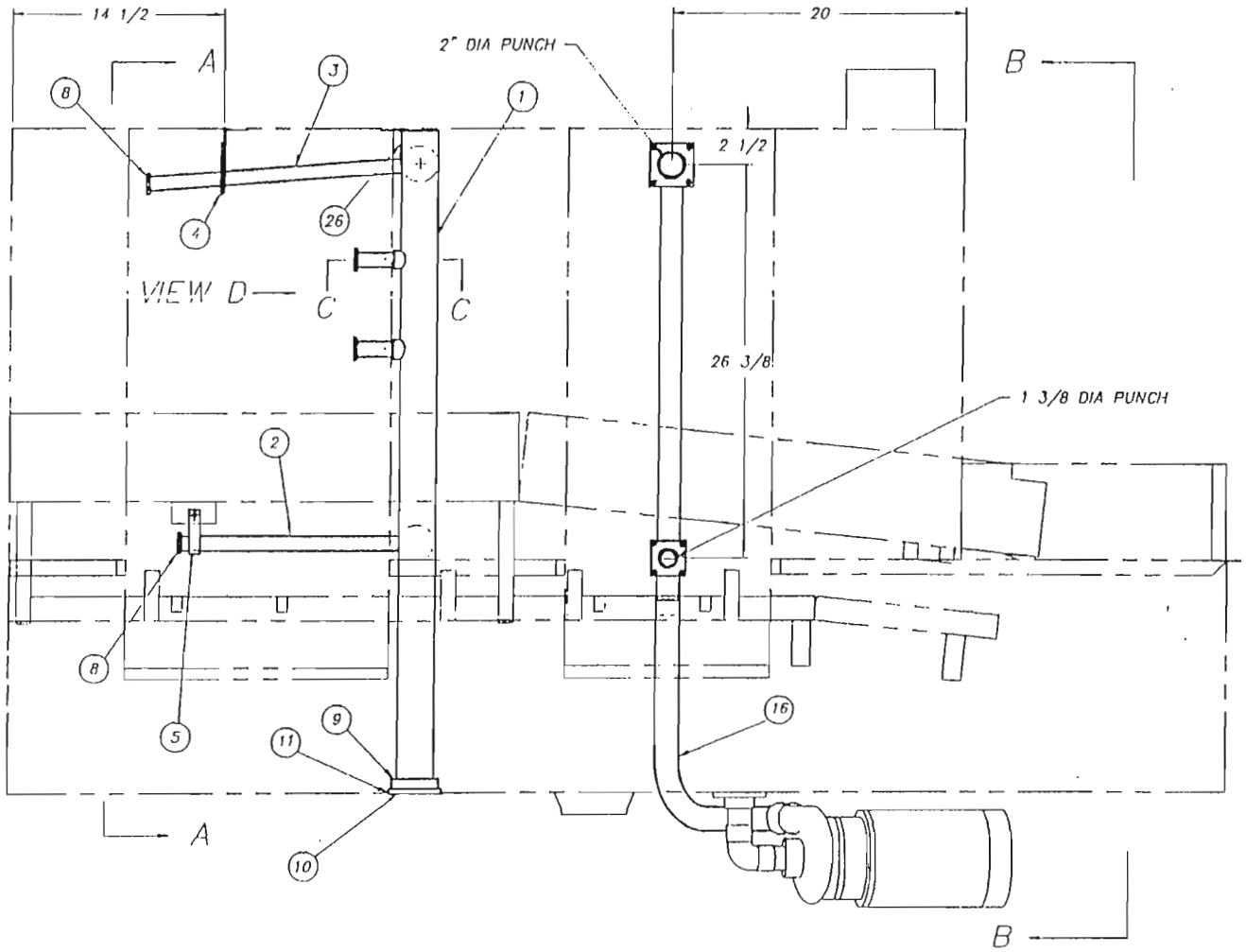

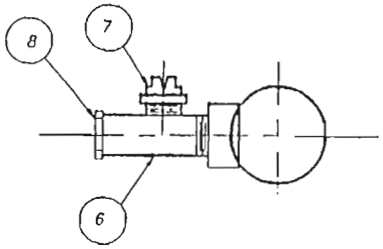

SECTION C–C

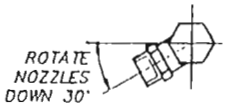

VIEW D

R.H. MACHINE SHOWN

SHEET 1 OF 4

REV	ECN NO	DATE
B	1001[illegible]4	4.27.94
A	990	3.23.94

FILE: PARTS\1390-56

TOLERANCES
FRACTIONS ±1/64
DECIMALS
.XXX ± .005
.XX ± .01
ANGLES ±1/2°
UNLESS OTHERWISE SPECIFIED

TITLE: DISCHARGE LINE ASSEMBLY LOAD SECTION

NEXT ASSY: 1390-1
REQ'D: 1
DWG. NO.: 1390-56

MAT'L: NOTED
SCALE: 1=8
USED ON: CENTURY

Insinger Machine Company
Philadelphia, PA 19135
(215) 624-4800
FAX (215) 624-6966

DRWN/DATE: PG 4.5.93

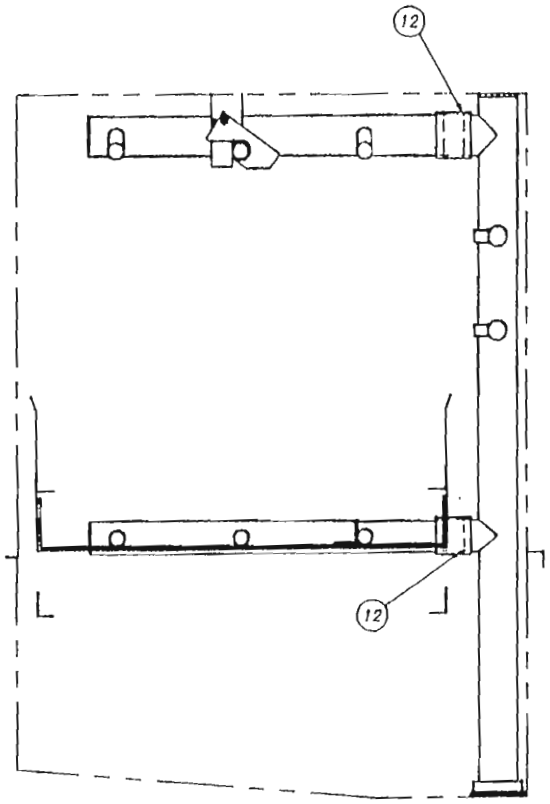

SECTION A–A

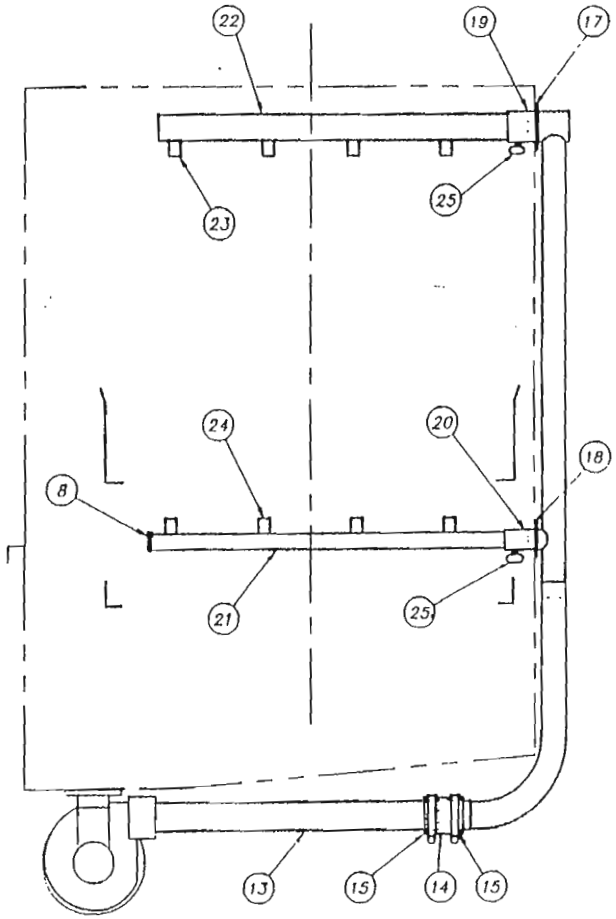

SECTION B–B

ITEM	PART NO.	SIZE	DESCRIPTION	QTY.
1	1390–58	B	DISCHARGE TUBE–WASH	1
2	1390–33	B	MANIFOLD ASSEMBLY–LOWER	1
3	1390–34	B	MANIFOLD ASSEMBLY–UPPER	1
4	1372–17	A	LATCH ASSEMBLY–SPRAY PIPE	1
5	1390–59	A	CRADLE–SPRAY PIPE	1
6	1162–94	A	EXTENSION MANIFOLD	2
7	D2773	–	SPRAY NOZZLE	2
8	D2–554–3	A	PLUG 7/8–9 UNC–2A	9
9	D2–158	A	TANK FLANGE	1
10	D–514	A	GASKET	1
11	D3–511	–	CUPSEAL,PARKER#8406–0250–4180	1
12	D2–564	–	"O" RING (01–032)	2
13	1390–63	A	NIPPLE	1
14	D2749	–	HOSE CLEAR PVC, 1 3/4 I.D. X 2 1/4 O.D. X 2 1/2 LG.	1
15	D2748	–	HOSE CLAMPS	2
16	1390–60	B	DISCHARGE TUBE WELDMENT	1
17	1182–70	A	GASKET–UPPER	1
18	1182–71	A	GASKET–LOWER	1
19	D580	–	"O" RING	1
20	D2–570	–	"O" RING	1
21	1390–64	B	LOWER SPRAY PIPE	1
22	1390–65	B	UPPER SPRAY PIPE	1
23	D2272	–	SPRAY NOZZLE	4
24	D2712	–	SPRAY NOZZLE	4
25	D–91	A	THUMBSCREW	2
26	1169–96	A	SUPPORT INSTALLATION	1

R.H. MACHINE SHOWN

SHEET 2 OF 4

REV	ECN NO	DATE
B	1008	4.27.94
A	990	3.23.94

FILE: PARTS\1390–56

TOLERANCES
FRACTIONS ±1/64
DECIMALS
.XXX ± .005
.XX ± .01
ANGLES ±1/2°
UNLESS OTHERWISE SPECIFIED

TITLE: DISCHARGE LINE ASSEMBLY LOAD SECTION

MATL: NOTED

NEXT ASSY: 1390–1
REQ'D: 1
SCALE: 1=8
DWG. NO.: 1390–56
USED ON: CENTURY
DRWN/DATE: PG 4.5.93

Insinger Machine Company
Philadelphia, PA 19135
(215) 624–4800
FAX (215) 624–6966

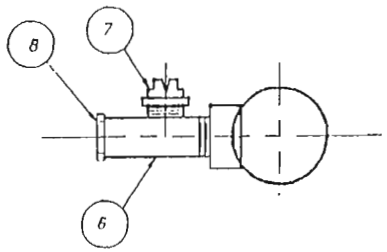

SECTION C–C

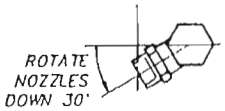

VIEW D

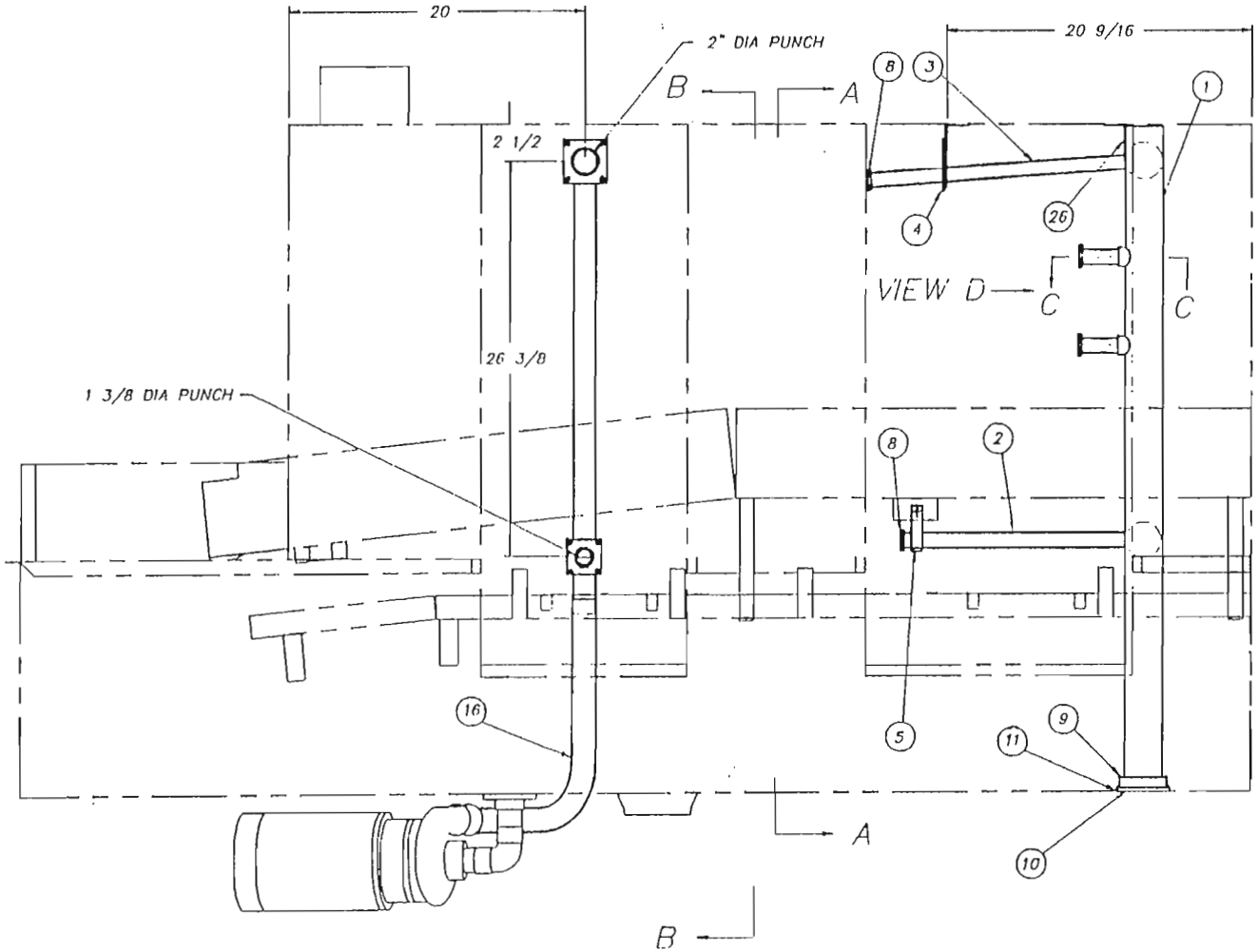

L.H. MACHINE SHOWN

SHEET 3 OF 4

			TOLERANCES	TITLE DISCHARGE LINE ASSEMBLY LOAD SECTION	NEXT ASSY 1390-1 REQ'D 1	DWG. NO. 1390-56
			FRACTIONS ±1/64 DECIMALS .XXX ± .005 .XX ± .01 ANGLES ±1/2° UNLESS OTHERWISE SPECIFIED	MAT'L NOTED	SCALE 1=8	USED ON CENTURY
B	1009	4.27.94		Insinger Machine Company, Philadelphia, PA 19135, (215) 624-4800, FAX (215) 624-6986		DRWN/DATE PG 4.5.93
A	990	3.23.94				
REV	ECN NO	DATE				
FILE: P:\ARTS\1390-56						

ITEM	PART NO.	SIZE	DESCRIPTION	QTY.
27	D317A-H3-H1	–	ADAPTER 1 1/2C X 1 1/2 FIPS	1
28	D315A-H3-H3	–	ELL 45° 1 1/2C	2
29	D207A-B12-26	–	COPPER TUBING 1 1/2 X 6 1/2 LG	1
30	D317A-H3-H2	–	ADAPTER 1 1/2C X 1 1/2 MIPS	1

ITEM	PART NO.	SIZE	DESCRIPTION	QTY.
1	1390-58	B	DISCHARGE TUBE-WASH	1
2	1390-33	B	MANIFOLD ASSEMBLY-LOWER	1
3	1390-34	B	MANIFOLD ASSEMBLY-UPPER	1
4	1372-17	A	LATCH ASSEMBLY-SPRAY PIPE	1
5	1390-59	A	CRADLE-SPRAY PIPE	1
6	1162-94	A	EXTENSION MANIFOLD	2
7	D2773	–	SPRAY NOZZLE	2
8	D2-554-3	A	PLUG 7/8-9 UNC-2A	9
9	D2-158	A	TANK FLANGE	1
10	D-514	A	GASKET	1
11	D3-511	–	CUPSEAL,PARKER#8406-0250-4180	1
12	D2-564	–	"O" RING (01-032)	2
13	1390-78	A	NIPPLE	1
14	D2749	–	HOSE CLEAR PVC, 1 3/4 I.D. X 2 1/4 O.D. X 2 1/2 LG.	1
15	D2748	–	HOSE CLAMPS	2
16	1390-60	B	DISCHARGE TUBE WELDMENT	1
17	1182-70	A	GASKET-UPPER	1
18	1182-71	A	GASKET-LOWER	1
19	D580	–	"O" RING	1
20	D2-570	–	"O" RING	1
21	1390-64	B	LOWER SPRAY PIPE	1
22	1390-65	B	UPPER SPRAY PIPE	1
23	D2272	–	SPRAY NOZZLE	4
24	D2712	–	SPRAY NOZZLE	4
25	D-91	A	THUMBSCREW	2
26	1169-96	A	SUPPORT INSTALLATION	1

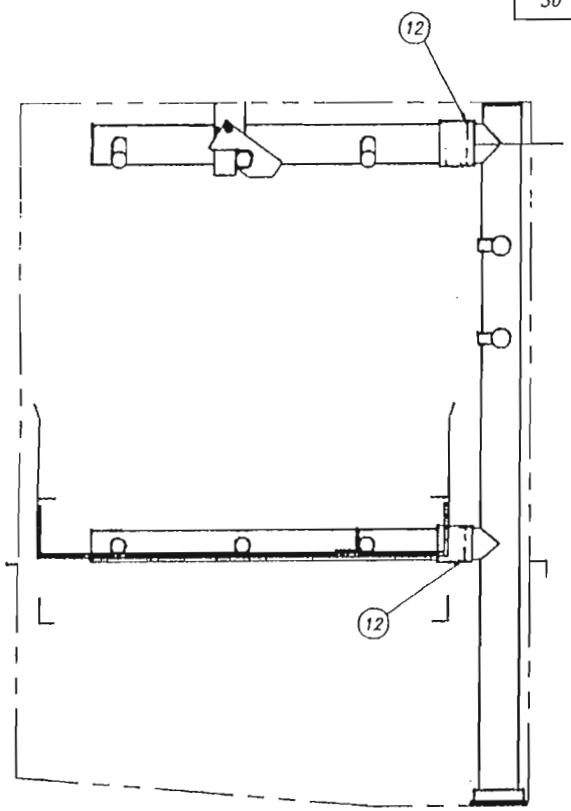

SECTION A-A

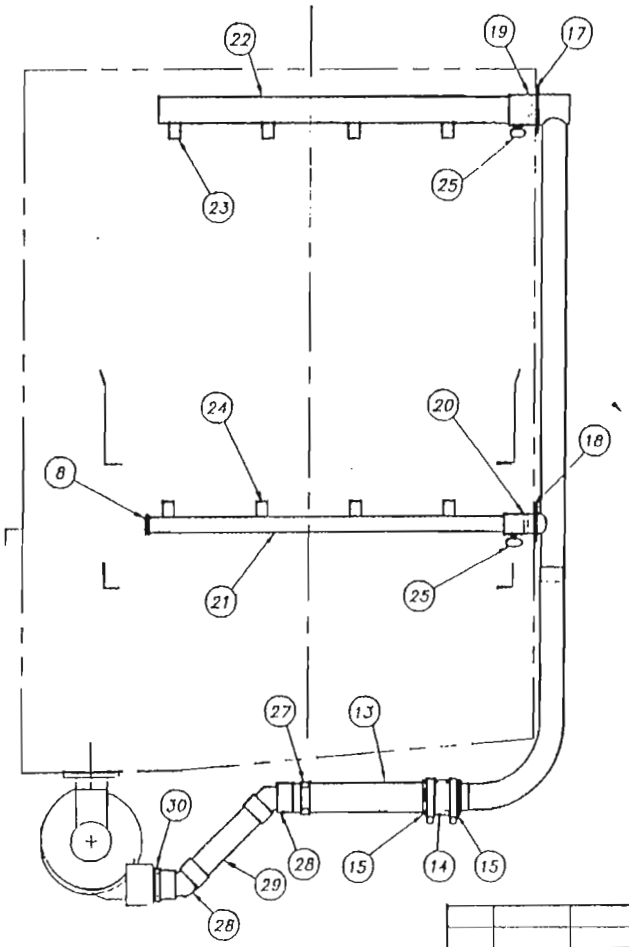

SECTION B-B

L.H. MACHINE SHOWN

SHEET 4 OF 4

REV	ECN NO	DATE
D	1004	4.27.94
A	990	3.23.94

FILE: PARTS\1390-56

TOLERANCES
FRACTIONS ±1/64
DECIMALS
.XXX ± .005
.XX ± .01
ANGLES ±1/2°
UNLESS OTHERWISE SPECIFIED

TITLE: DISCHARGE LINE ASSEMBLY LOAD SECTION

MAT'L: NOTED

NEXT ASSY: 1390-1
REQ'D: 1
SCALE: 1=8
DWG. NO. 1390-56
USED ON: CENTURY
DRWN/DATE: PC 4.5.93

Insinger Machine Company
Philadelphia, PA 19135
(215) 624-4800
FAX (215) 624-8966

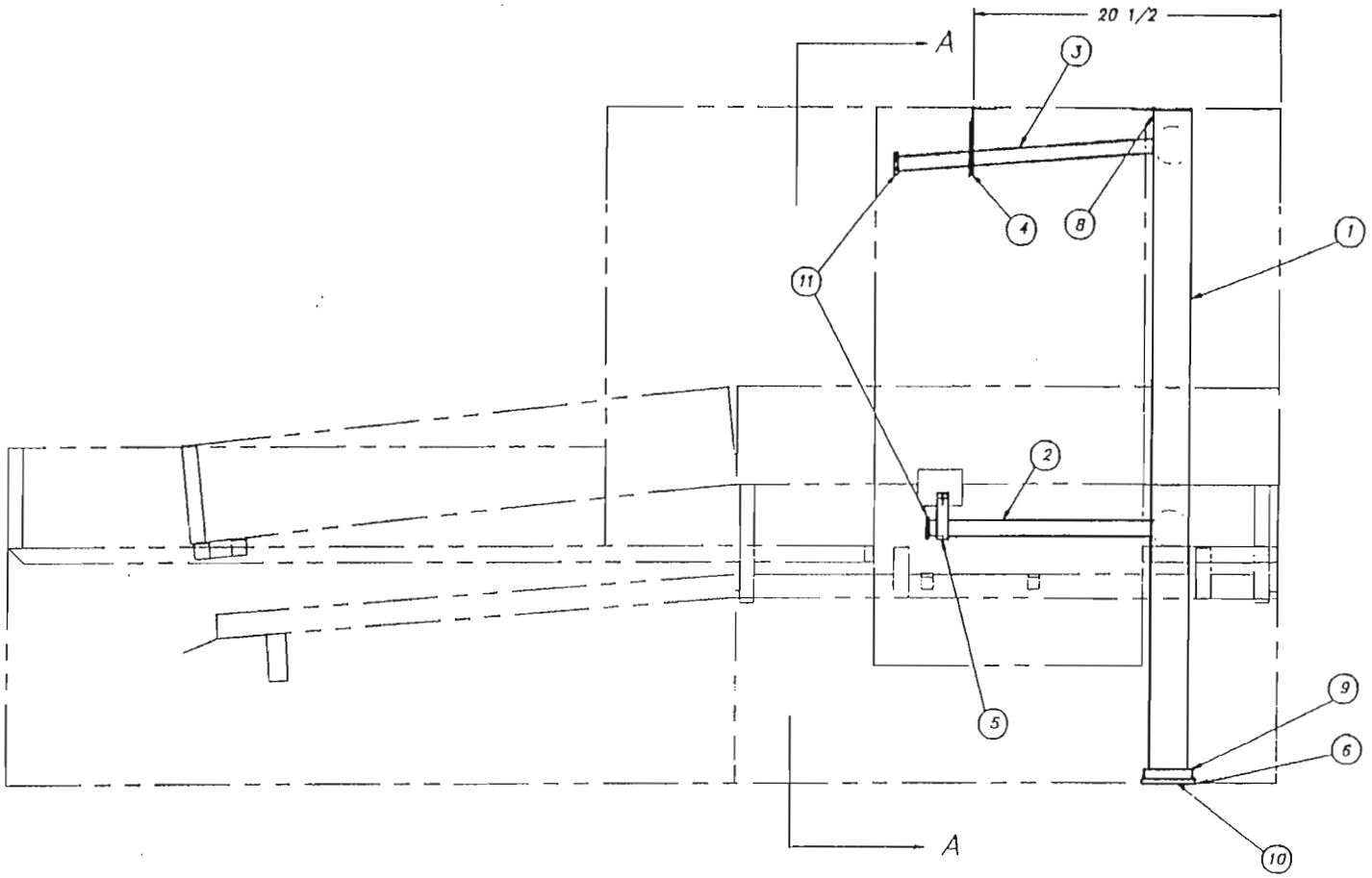

R.H. MACHINE SHOWN

SHEET 1 OF 3

REV	ECN NO	DATE

FILE: PARTS\1390-57

TOLERANCES
FRACTIONS ±1/64
DECIMALS
.XXX ± .005
.XX ± .01
ANGLES ±1/2°
UNLESS OTHERWISE SPECIFIED

TITLE: DISCHARGE LINE ASSEMBLY
UNLOAD SECTION

NEXT ASSY: 1390-1
REQ'D: 1

DWG. NO.: 1390-57

MAT'L: AS NOTED

SCALE: 1=8

USED ON: CENTURY

Insinger Machine Company
Philadelphia, PA 19135
(215) 624-4800
FAX (215) 624-6866

DRWN/DATE: PG 4.12.93

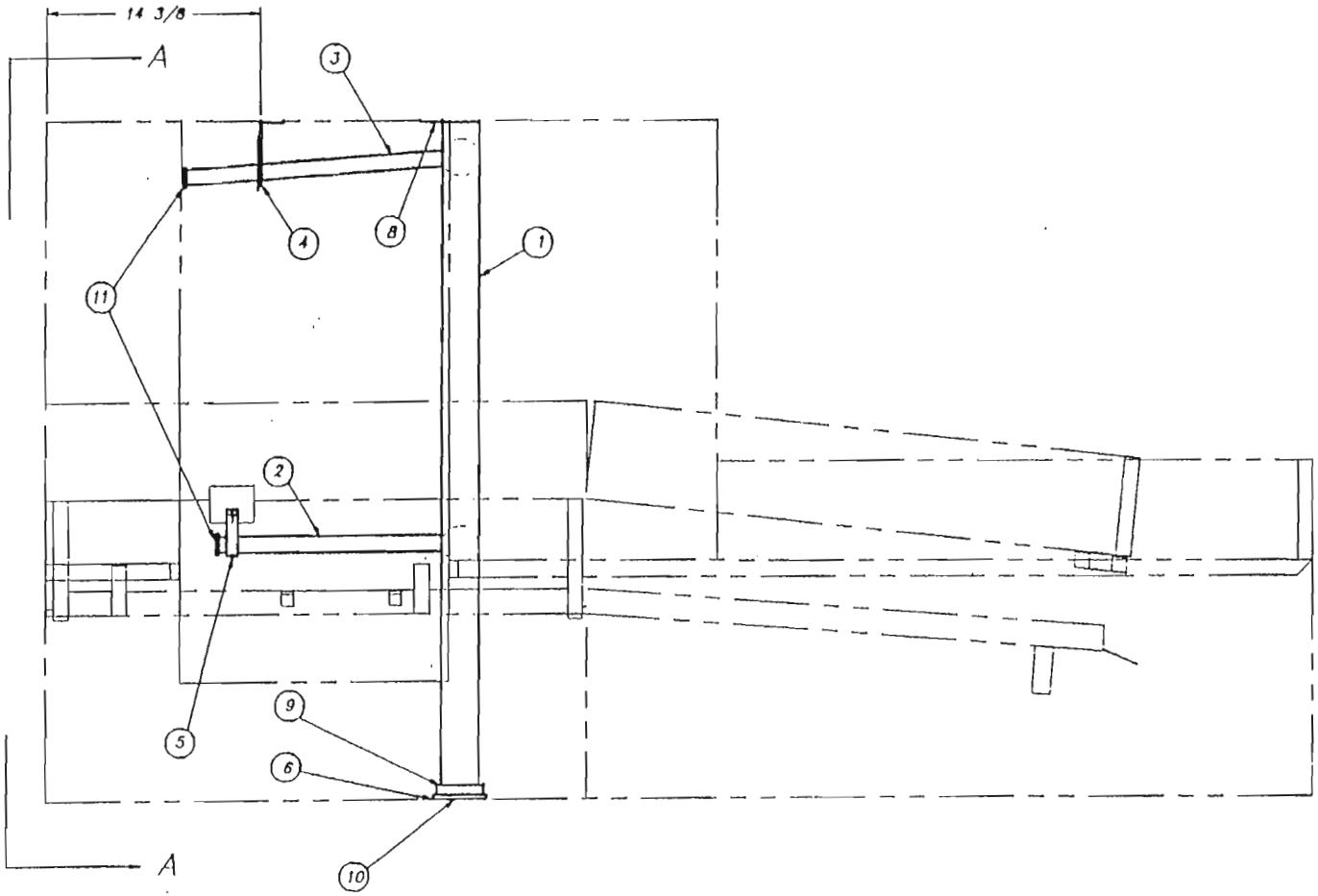

L.H. MACHINE SHOWN

SHEET 2 OF 3

			TOLERANCES	TITLE DISCHARGE LINE ASSEMBLY UNLOAD SECTION	NEXT ASSY 1390-1	DWG. NO.
			FRACTIONS ±1/64 DECIMALS .XXX ± .005 .XX ± .01 ANGLES ±1/2° UNLESS OTHERWISE SPECIFIED		REQ'D 1	1390-57
				MAT'L AS NOTED	SCALE 1=8	USED ON CENTURY
REV	ECN NO	DATE		Insinger Machine Company Philadelphia, PA 19135 (215) 624-4800 FAX (215) 624-8966		DRWN/DATE PC 4.12.93
FILE: PARTS\1390-57						

ITEM	PART NO.	SIZE	DESCRIPTION	QTY.
1	1390-67	B	DISCHARGE TUBE-RINSE	1
2	1390-33	B	MANIFOLD ASSEMBLY-LOWER	1
3	1390-34	B	MANIFOLD ASSEMBLY-UPPER	1
4	1372-17	A	LATCH ASSEMBLY-SPRAY PIPE	1
5	1390-59	A	CRADLE-SPRAY PIPE	1
6	D3-511	–	CUPSEAL,PARKER#8406-0250-4180	1
7	D2-664	–	"O" RING (01-032)	2
8	1169-98	A	SUPPORT INSTALLATION	1
9	D2-158	A	TANK FLANGE	1
10	D-514	A	GASKET	1
11	D2-554-3	A	PLUG 7/8-9 UNC-2A	8

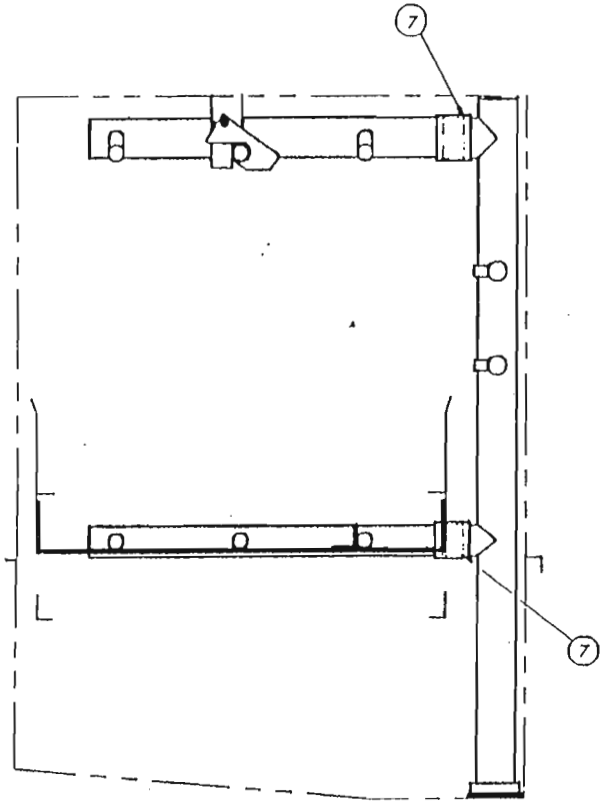

SECTION A–A

SHEET 3 OF 3

REV	ECN NO	DATE

FILE: PARTS\1390-67

TOLERANCES
FRACTIONS ±1/64
DECIMALS
.XXX ± .005
.XX ± .01
ANGLES ±1/2°
UNLESS OTHERWISE SPECIFIED

TITLE: DISCHARGE LINE ASSEMBLY UNLOAD SECTION

MATL: AS NOTED

NEXT ASSY: 1390-1
REQ'D: 1
SCALE: 1=8
DWG. NO.: 1390-57
USED ON: CENTURY
DRWN/DATE: PO 4.12.93

Insinger Machine Company
Philadelphia, PA 19135
(215) 624-4800
FAX (215) 624-6966

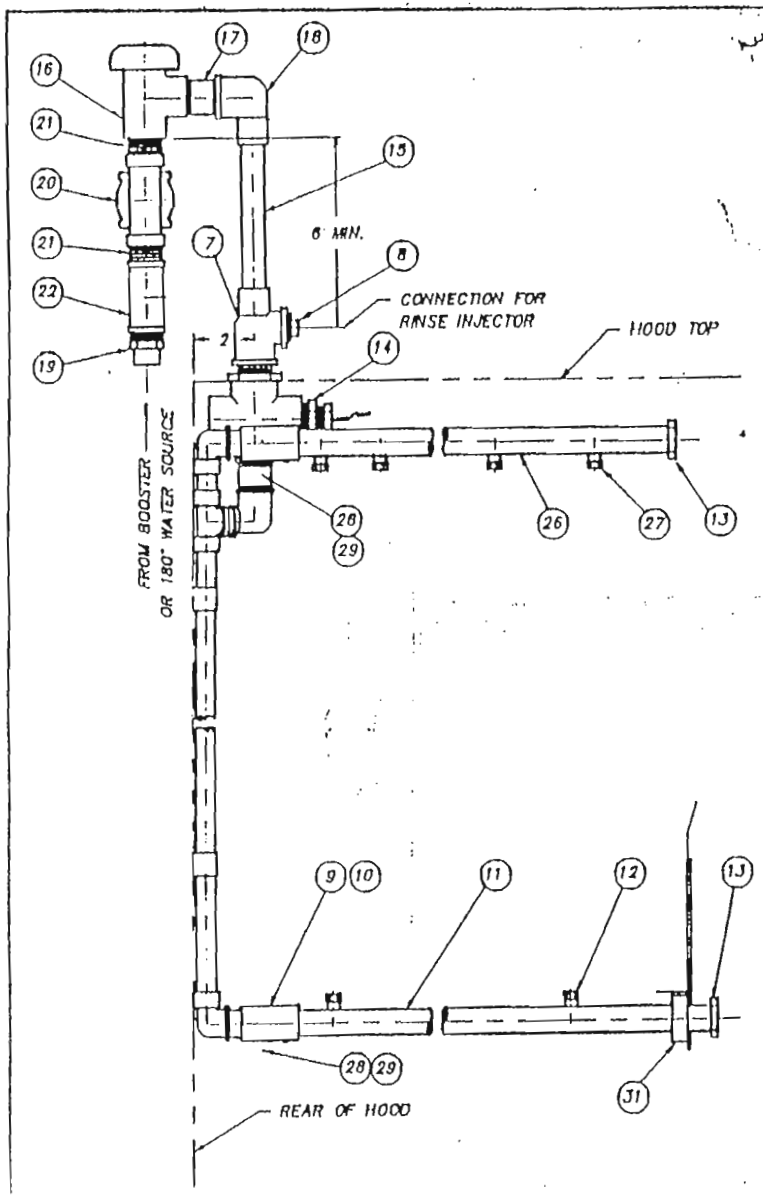

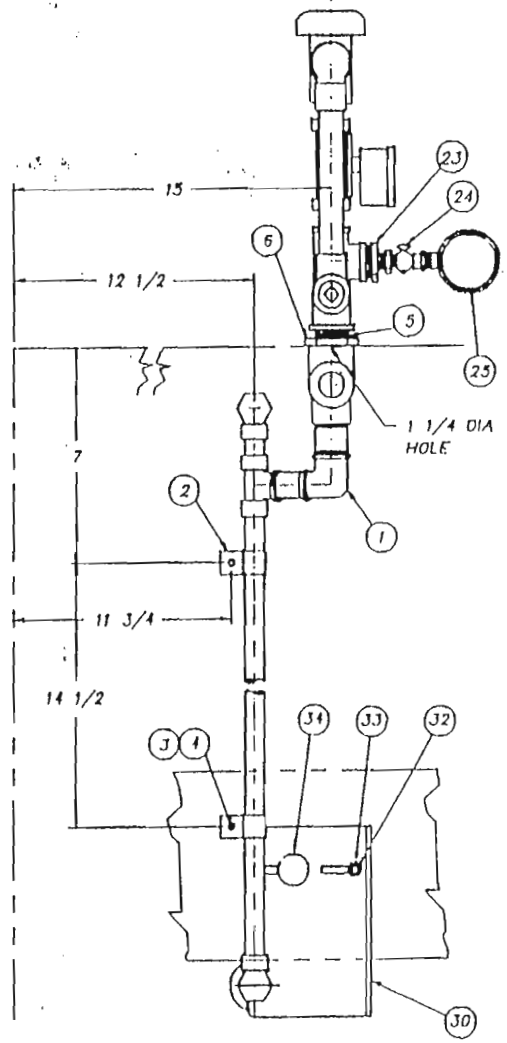

FRONT VIEW
AT RINSE END

ITEM	PART NO.	SIZE	DESCRIPTION	QTY.
1	1390-69	B	FINAL RINSE INSIDE PIPING	1
2	975-100	A	BRACKET	2
3	0309C-EF-3C	–	WELDSTUD 10-32 X3/8	2
4	0312C-EF-5	–	LOCKNUT 10-32	2
5	0314F-EA-12	–	NIPPLE 3/4 IPS X 1 1/2 AT	1
6	0328F-E1	–	LOCKNUT 3/4 IPS	1
7	0320A-E3E1D1	–	TEE 3/4 IPS X 3/4C X 1/2 IPS	1
8	0328F-D2-A	–	PIPE PLUG 1/2 IPS	1
9	03-803	A	ADAPTER	2
10	02-594	–	"O" RING	2
11	SK-3618	A	SPRAY PIPE	1
12	0-2288	–	SPRAY NOZZLES 1/8 IPS	4
13	02-554-2	A	PLUG 3/4-10 UNC-2A	2
14	0322F-E2-01	–	HEX RED 3/4MPS X 1/2FPS	1
15	0207A-B8-22	–	COP TUBE 3/4CTS X 5 1/2	1
16	0-2243	–	VACUUM BREAKER 3/4 IPS	1
17	0314F-ES-16	–	NIPPLE 3/4 IPS X 2	1
18	0316F-E3-E1	–	90° ELL 3/4 C X 3/4 FPS	1
19	0317A-E3-E2	–	ADAPTER 3/4 MPS X 3/4 C	1
20	0-2597	–	SOLENOID (WATER) 3/4 IPS	1
21	0314F-EC-00	–	CLOSE NIPPLE 3/4 IPS	2
22	0320F-E1E1E1	–	TEE 3/4 IPS	1
23	0322F-E2-81	–	HEX RED 3/4 MPS X 1/4 FPS	1
24	0-2497	–	PETCOCK 1/4 IPS	1
25	SK-1433	A	PRESSURE GAUGE 1/4 IPS	1
26	1100-283	B	SPRAY PIPE	1
27	02701	–	SPRAY NOZZLE	8
28	0312C-EF-7	–	WINGNUT #10-32	2
29	0309C-EF-6B	–	RD HD SCR #10-32 X 3/4	2
30	1390-98	A	RETAINER	1
31	1390-99	A	COLLAR	1
32	0309C-GC-3C	–	WELDSTUD 1/4-20 X 5/8 LG.	2
33	0312C-GC-5	–	LOCKNUT 1/4-20	1
34	02-651	–	KNOB 1/4-20	1

R.H. MACH. SHOWN L.H. MACH. OPPOSITE

REV	ECN NO	DATE
B	1004	5.16.94
A	976	1.14.94

FILE: PARTS\1390-68

TOLERANCES
FRACTIONS ±1/64
DECIMALS
.XXX ± .005
.XX ± .01
ANGLES ±1/2°
UNLESS
OTHERWISE
SPECIFIED

TITLE: FINAL RINSE ASSEMBLY

NEXT ASSY: 1390-1
REQ'D: 1

DWG. NO. 1390-68

MATL: NOTED

SCALE: 1=4

USED ON: CENTURY

Insinger Machine Company
Philadelphia, PA 19135
(215) 624-4800
FAX (215) 624-6966

DRWN/DATE: PG 4.6.93

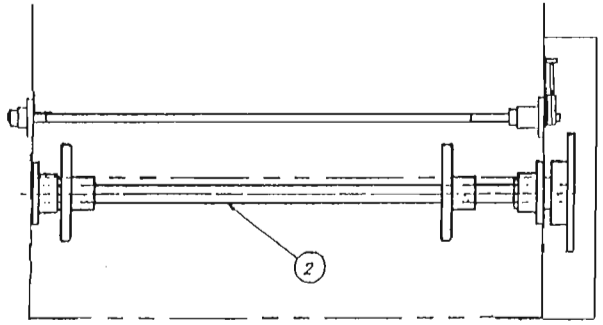

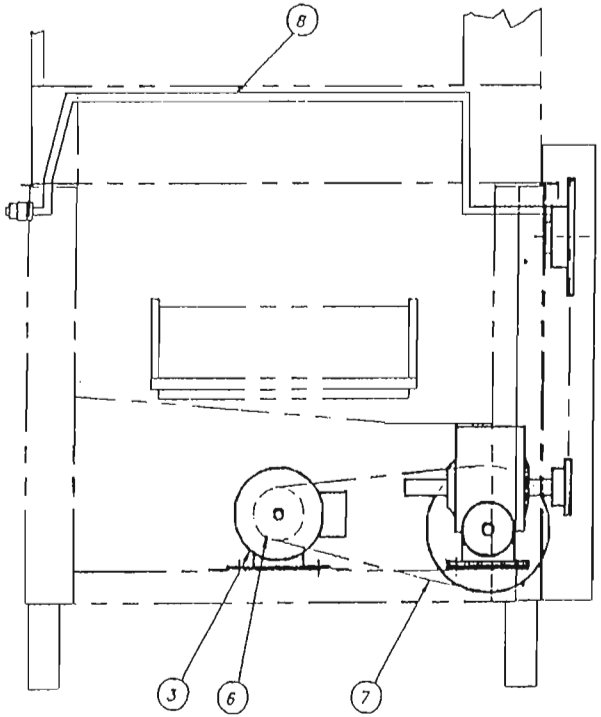

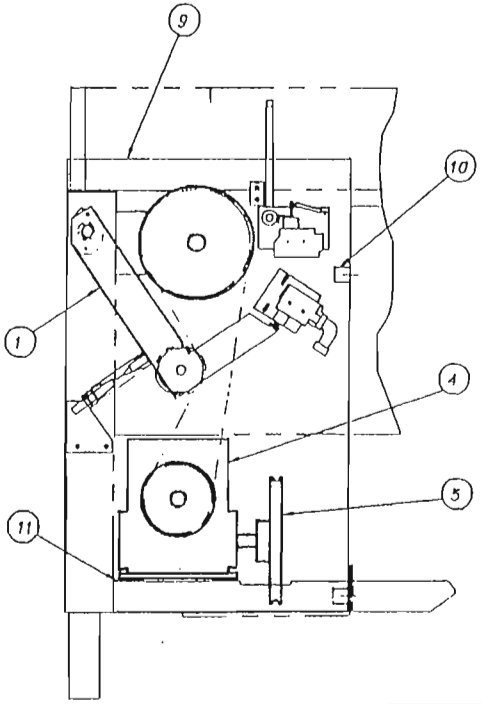

UNLOAD END

ITEM	PART NO.	SIZE	DESCRIPTION	QTY.
1	1100-289	B	CONVEYOR OVERLOAD SHUTOFF	1
2	1100-117	B	DRIVE SHAFT ASSY	1
3	–	–	MOTOR BALDOR M310B ODP	1
4	D-2344A	–	REDUCER BOND 262B 64:1	1
5	D-2527	–	PULLEY 7.95 O.D.	1
6	818-16	A	PULLEY	1
7	D2-582	–	"V" BELT 4L450	1
8	1100-123	B	STOP BAR ASSY & LOCATION	1
9	1390-80	A	COVER, MECHANISM GUARD	1
10	D2-843	A	BRACKET, MECHANISM GUARD	2
11	1390-89	A	SHIM	2

R.H SHOWN L.H. OPPOSITE

REV	ECN NO	DATE

FILE: PARTS\1390-72

TOLERANCES
FRACTIONS ±1/64
DECIMALS
.XXX ± .005
.XX ± .01
ANGLES ±1/2°
UNLESS OTHERWISE SPECIFIED

TITLE: CONVEYOR DRIVE ASSEMBLY

NEXT ASSY: 1390-1
REQ'D: 1

DWG. NO. 1390-72

MATL: AS NOTED

SCALE: 1=8

USED ON: CENTURY

Insinger Machine Company
Philadelphia, PA 19135
(215) 624-4800
FAX (215) 624-6966

DRWN/DATE: PC 4.15.93

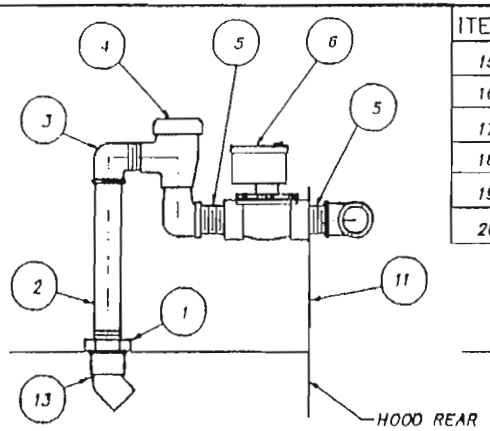

SECTION A–A
TYP 3 PLACES

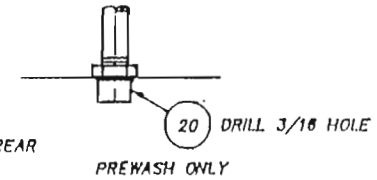

PREWASH ONLY

ITEM	PART NO.	SIZE	DESCRIPTION	QTY.
15	D317A-D3-D2	–	ADAPTER 1/2 C X 1/2 MIPS	2
16	D207A-B4-80	–	COPPER TUBING 1/2 CTS X 20 LG.	1
17	D320F-D1D1D1	–	TEE 1/2 IPS	
18	D314F-EC-00	–	CLOSE NIPPLE 3/4 IPS	1
19	D-2482	–	"Y" STRAINER 3/4 IPS	1
20	D328F-D1	–	CAP 1/2 IPS	1

ITEM	PART NO.	SIZE	DESCRIPTION	QTY.
1	D326F-D1	–	LOCKNUT 1/2 IPS	3
2	D314F-DL-52	–	NIPPLE 1/2 IPS X 6 1/2 L.O.E.	3
3	D316F-D1-D2	–	90 ° STREET ELL 1/2 IPS	6
4	D-2241	–	VACUUM BREAKER 1/2 IPS	3
5	D314F-DC-00	–	CLOSE NIPPLE 1/2 IPS	6
6	D-2608	–	SOLENOID VALVE 1/2 IPS 24V	3
7	D320F-E1E1D1	–	TEE 3/4FIPS X 3/4FIPS X 1/2FIPS	1
8	D317A-E3-E2	–	ADAPTER 3/4 C X 3/4 MIPS	2
9	D320F-E1D1D1	–	TEE 3/4FIPS X 1/2FIPS X 1/2FIPS	1
10	D328F-D2-A	–	PIPE PLUG 1/2 IPS	1
11	957-80	A	BRACKET	3
12	D207A-B8-88	–	COPPER TUBING 3/4CTS X 17	2
13	D315A-D1-D1	–	45° 1/2 FIPS X 1/2 FIPS	2
14	D318A-E3-E	–	UNION 3/4C	1

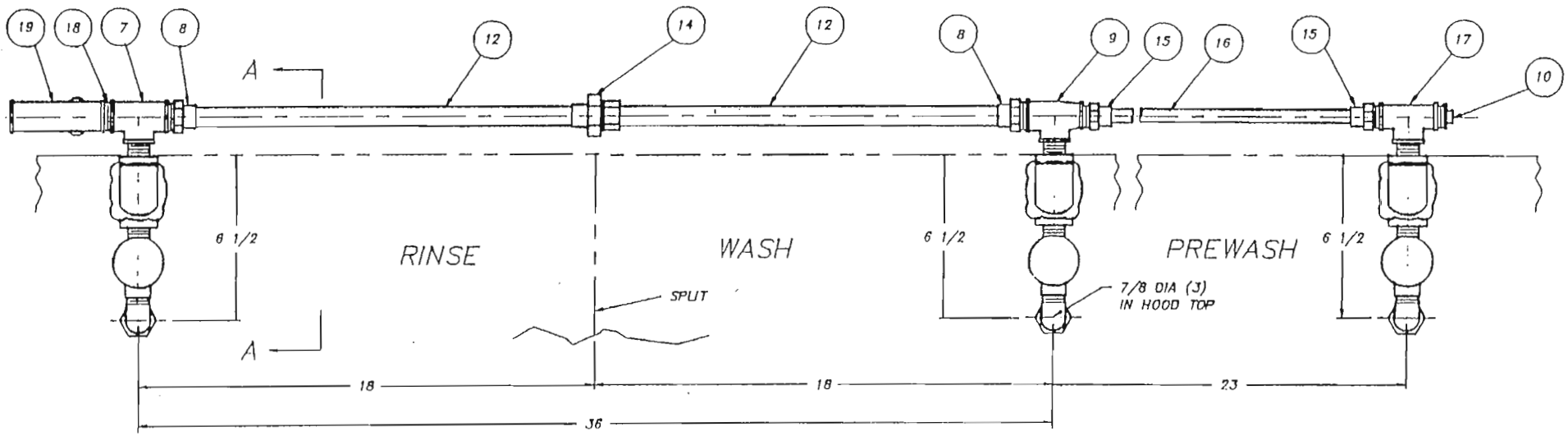

R.H. SHOWN L.H. OPPOSITE

A	1004	4.25.94
REV	ECN NO	DATE

FILE: PARTS\1390-71

TOLERANCES
FRACTIONS ±1/64
DECIMALS
.XXX ± .005
.XX ± .01
ANGLES ±1/2°
UNLESS OTHERWISE SPECIFIED

TITLE: AUTO TANK FILL ASSEMBLY WASH & RINSE

NEXT ASSY: 1390-1
REQD: 1
DWG. NO.: 1390-71
MAT'L: NOTED
SCALE: 1=4
USED ON: CENTURY

Insinger Machine Company
Philadelphia, PA 19135
(215) 624-4800
FAX (215) 624-8986

DRWN/DATE: PG 4.18.93

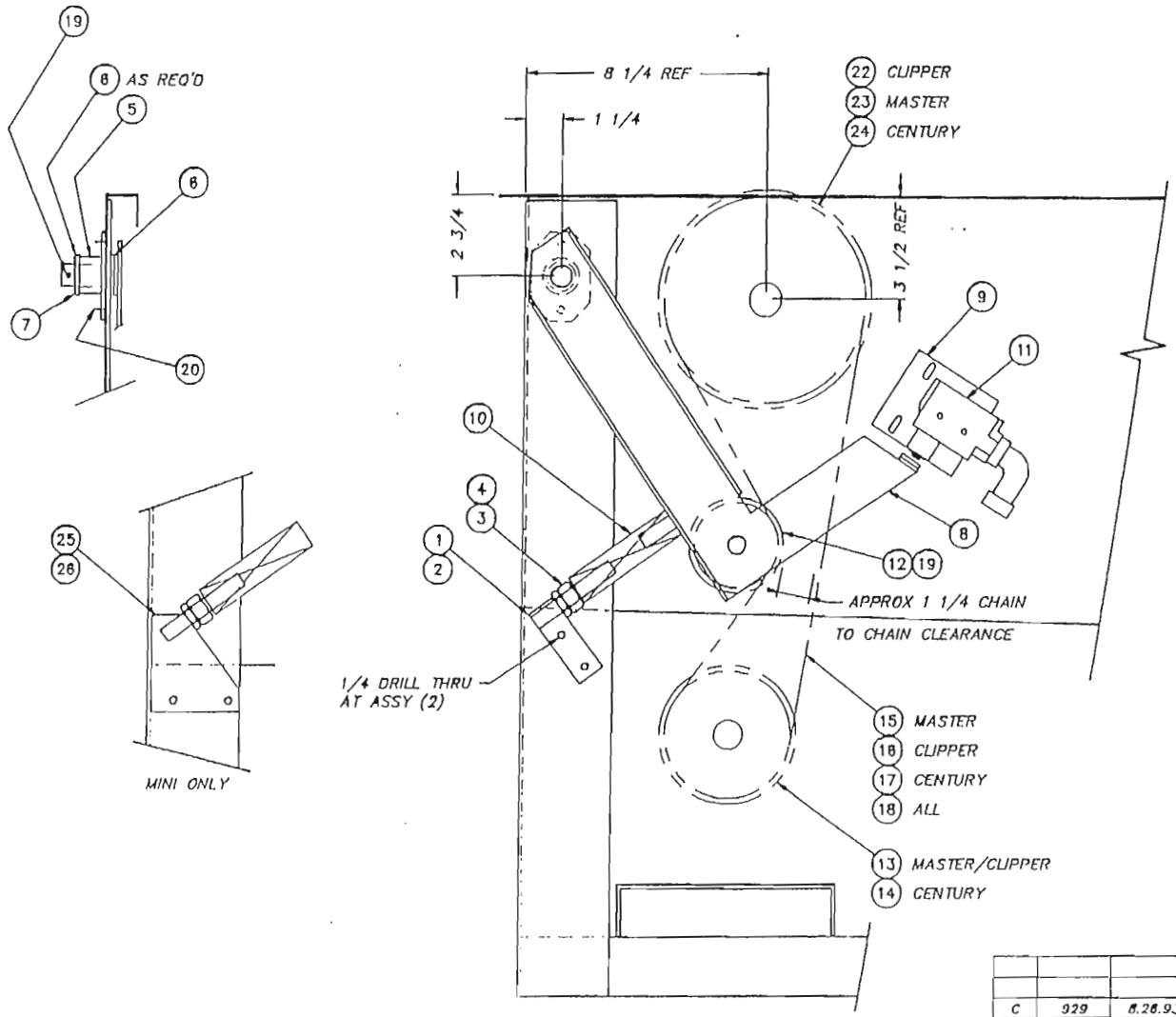

ITEM	PART NO.	DESCRIPTION	QTY.
1	1100-285	ADJUSTABLE SPRING STOP	1
2	1100-309	SHIM	1
3	D312C-LC-2	1/2-13 HEX NUT	1
4	D312C-LC-1	1/2-13 JAM NUT	1
5	1100-286	ATC PIVOT CUP	1
6	D2-525	1/8 THK SPACER	3
7	D470A	1/16 THK WASHER	1
8	1100-287	ATC ARM WELDMENT	1
9	1100-288	MICROSWITCH BRACKET	1
10	D351	SPRING	1
11	D2215A	MICROSWITCH	1
12	1100-310	IDLER SPROCKET	1
13	D2714	60B18-F1 SPROCKET	1
14	D2760	60B13-F1 SPROCKET	1
15	D308C-60	ROLLER CHAIN, 48 3/4 LG	1
16	D308C-60	ROLLER CHAIN, TBD LG	1
17	D308C-60	ROLLER CHAIN, 49" LG.	1
18	D308C-60CL	ROLLER CHAIN CONN. LINK	1
19	D311-22	S/S COTTER PIN, 1/8 x 1 1/4	2
20	D309C-GC-5	1/4-20 x 5/8 LG WELD STUD	2
21	-	-	-
22	D-2333	60B36-F1 1/8 SPROCKET	1
23	D2-146	60B29-F1 1/8 SPROCKET	1
24	D2761	60B30-F1 1/8 SPROCKET	1
25	1100-311	ADJUSTABLE SPRING STOP	1
26	1100-312	SHIM	1
27	-	-	-
28	-	-	-
29	-	-	-

RIGHT HAND SHOWN LEFT HAND OPPOSITE
DRAWN TO SCALE FOR MASTER MACHINE

REV	ECN NO	DATE
C	929	8.26.93
B	851	3.12.93
A	560	-

FILE: PARTS\1100-289

TOLERANCES
FRACTIONS ±1/64
DECIMALS
.XXX ± .005
.XX ± .01
ANGLES ±1/2°
UNLESS OTHERWISE SPECIFIED

TITLE: CONVEYOR OVERLOAD SHUTOFF ASSEMBLY

NEXT ASSY: -
REQ'D: 1
DWG. NO.: 1100-289
MAT'L: -
SCALE: 1=4
USED ON: CLIP/MASTER

Insinger Machine Company
Philadelphia, PA 19135
(215) 624-4800
FAX (215) 624-6966

DRWN/DATE: JRS 4.15.91

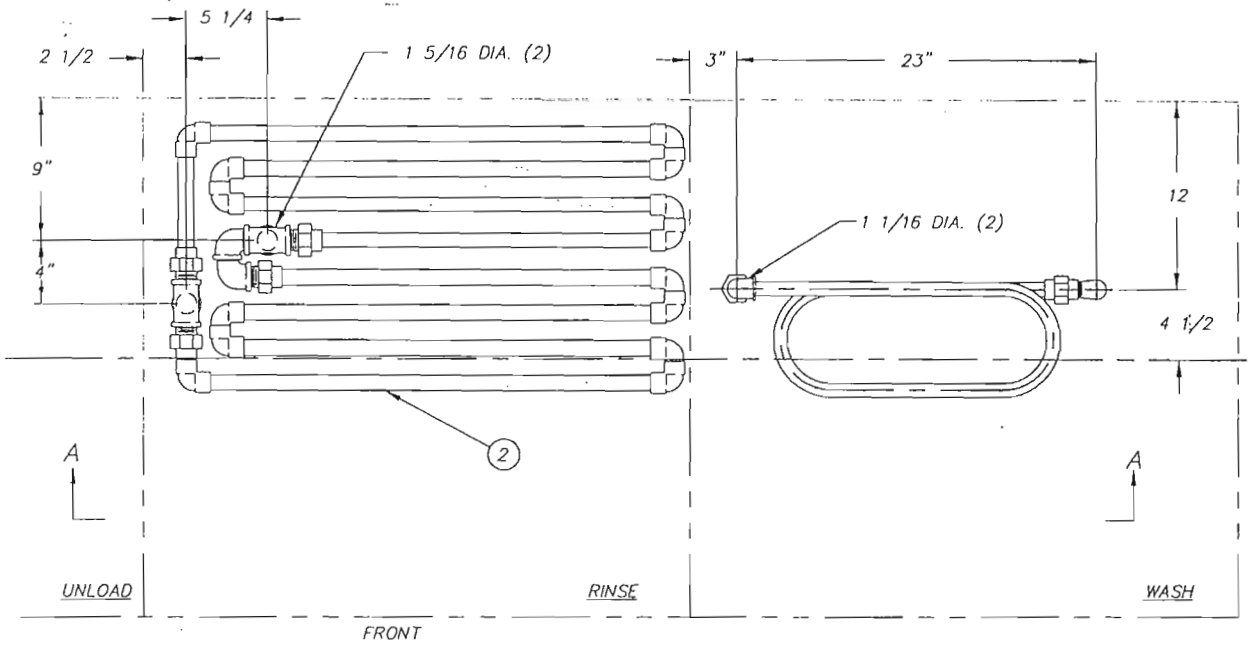

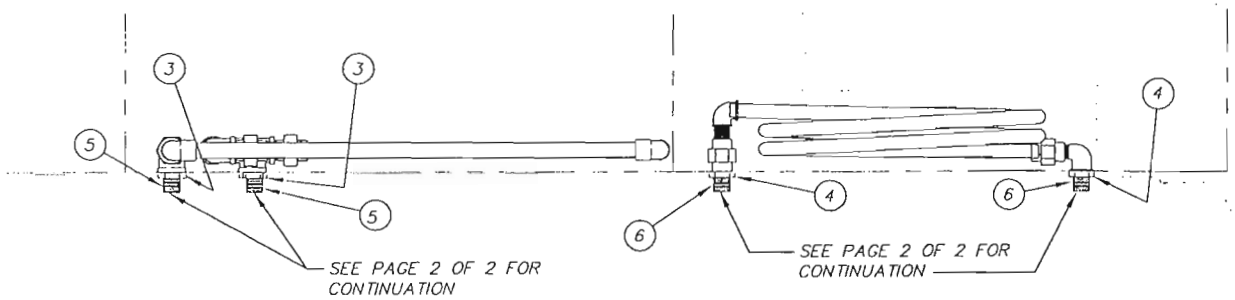

VIEW A – A

R.H. SHOWN – L.H. OPPOSITE

SHEET 1 OF 3

REV	ECN NO	DATE
A	979	1.17.94

FILE: PARTS\1390-74

TOLERANCES
FRACTIONS ±1/64
DECIMALS
.XXX ± .005
.XX ± .01
ANGLES ±1/2°
UNLESS OTHERWISE SPECIFIED

TITLE: STEAM PIPING WASH & RINSE TANKS

NEXT ASSY: 1390-1
REQ'D: 1
DWG. NO.: 1390-74
MAT'L: AS NOTED
SCALE: 1=8
USED ON: CENTURY

Insinger Machine Company
Philadelphia, PA 19135
(215) 624-4800
FAX (215) 624-6966

DRWN/DATE: PG 4.26.93

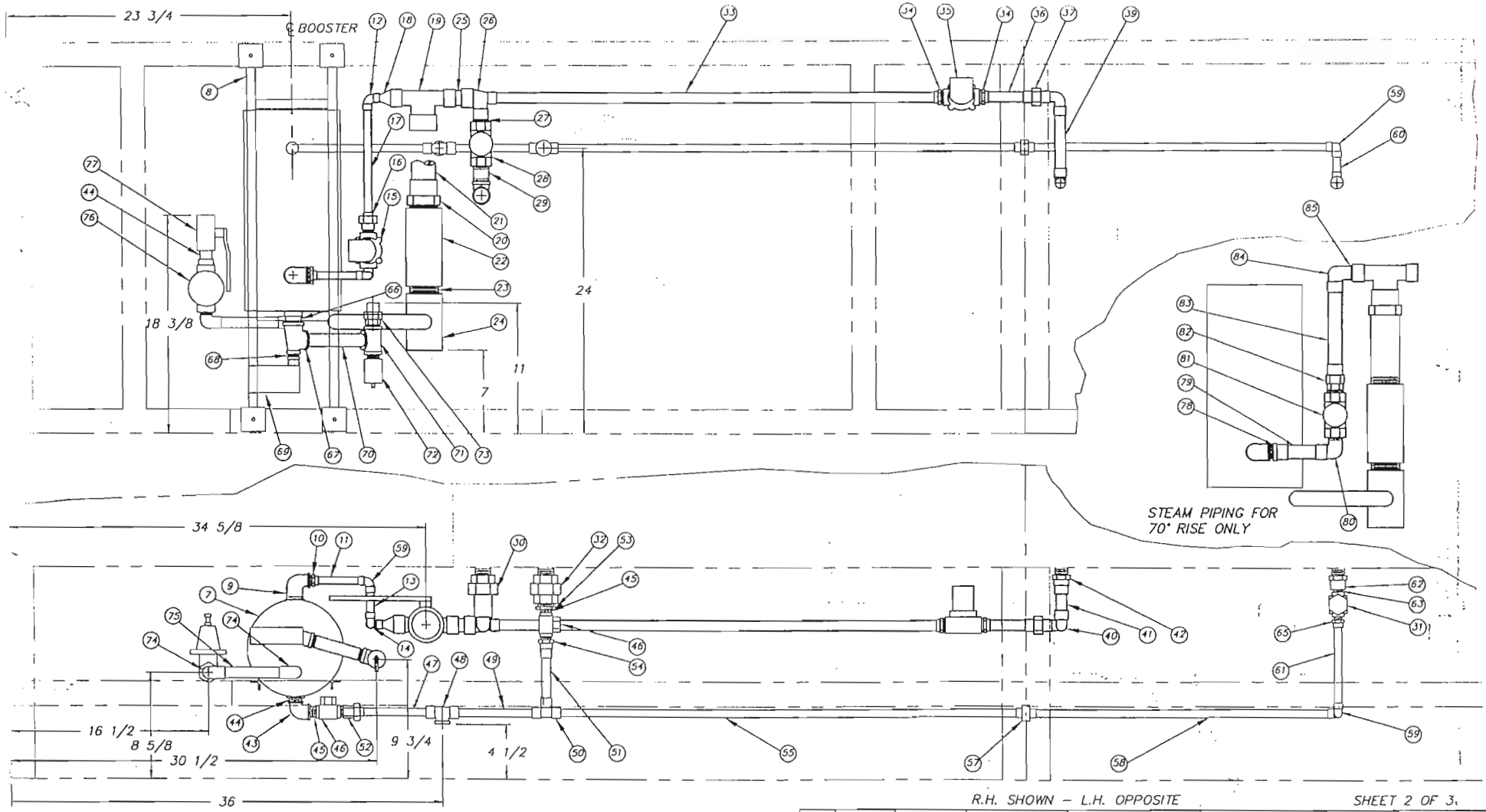

R.H. SHOWN – L.H. OPPOSITE

SHEET 2 OF 3.

REV	ECN NO	DATE
A	979	1.17.94

FILE: PARTS\1390-74

TOLERANCES
FRACTIONS ±1/64
DECIMALS
.XXX ± .005
.XX ± .01
ANGLES ±1/2°
UNLESS OTHERWISE SPECIFIED

TITLE: STEAM PIPING WASH & RINSE TANKS

MAT'L: AS NOTED

NEXT ASSY: 1390-1

REQ'D: 1

SCALE: 1=8

DWG. NO.: 1390-74

USED ON: CENTURY

DRWN/DATE: PG 4.26.93

Insinger Machine Company
Philadelphia, PA 19135
(215) 624-4800
FAX (215) 624-6966

ITEM	PART NO.	DESCRIPTION	QTY.
61	D207A-B4-29	COPPER TUBING 1/2 CTS X 7 1/4	1
62	D320F-E1-C1	RED COUPLING 3/4 FIPS X 3/8 FIPS	1
63	D314F-CC-00	NIPPLE CLOSE 3/8 IPS	-1
64	–	–	–
65	D317A-D3-C2	ADAPTER 1/2 C X 3/8 MIPS	1
66	D314F-FC-00	NIPPLE CLOSE 1" IPS	1
67	D320F-F1D1E1	TEE 1"FIPS X 1/2FIPS X 3/4 FIPS	1
68	D322F-D2-C1	HEX RED 1/2 MIPS X 3/8 FIPS	1
69	D2396	THERMOSTAT (SEE NOTE #2)	1
70	D314A-ES-43	NIPPLE 3/4 IPS X 5 3/8	1
71	D320F-E1E1E1	TEE 3/4 IPS	1
72	D2507	PRESSURE RELIEF VALVE 3/4 IPS	1
73	D318A-E3-E2	UNION 3/4 C X 3/4 MIPS	1
74	D316A-E3-E2	90° ELBOW 3/4 C X 3/4 MIPS	2
75	D207A-B6-24	COPPER TUBING 3/4 CTS X 6	1
76	D1012	PRESSURE REG & STRAINER 3/4 IPS	1
77	D2340	BALL VALVE 3/4 IPS	1
78	D317A-F3-F2	ADAPTER 1" C X 1" MIPS	1
79	D207A-B8-16	COPPER TUBING 1" IPS X 4	1
80	D316A-F3-F2	90° ELBOW 1" C X 1" MIPS	1
81	–	SAME AS ITEM #28	1
82	D318A-F3-F2	UNION 1" C X 1" MIPS	1
83	D207A-B8-31	COPPER TUBING 1" CTS X 7 3/4	1
84	D316A-F4-F3	90° ELBOW 1" FTG X 1" C	1
85	D323A-G4-F3	FLUSH BUSH 1 1/4 FTG X 1" C	1

FOR 70° RISE

ITEM	PART NO.	DESCRIPTION	QTY.
31	D2102	STEAM TRAP 3/8 IPS	1
32	D318F-F1-F1	UNION 1" FIPS X 1" FIPS	1
33	D207A-B6-152	COPPER TUBING 3/4 CTS X 38	1
34	D317A-E3-E2	ADAPTER 3/4 C X 3/4 MIPS	2
35	D2595	SOLENOID VALVE 3/4 IPS	1
36	D207A-B6-18	COPPER TUBING 3/4 CTS X 4 1/2	1
37	D319A-E3-E3	UNION ELL 3/4 C X 3/4 C	1
38	–	–	–
39	D207A-B6-24	COPPER TUBING 3/4 CTS X 6	1
40	D316A-E3-E3	90° ELBOW 3/4 C X 3/4 C	1
41	D207A-B6-14	COPPER TUBING 3/4 CTS X 3 1/4	1
42	D317A-E3-E1	ADAPTER 3/4 C X 3/4 FIPS	1
43	D316F-E2-E1	90° RED ELL 3/4 FIPS X 1/2 FIPS	1
44	D314F-EC-00	NIPPLE CLOSE 3/4 IPS	2
45	D314F-DC-00	NIPPLE CLOSE 1/2 IPS	2
46	D2102A	STEAM TRAP 1/2 IPS	2
47	D207A-B4-25	COPPER TUBING 1/2 CTS X 6 1/4	1
48	D320A-E3D3E1	TEE 3/4 C X 1/2 C X 3/4 FIPS	1
49	D207A-B6-31	COPPER TUBING 3/4 CTS X 7 3/4	1
50	D320A-E3D3E3	TEE 3/4 C X 1/2 C X 3/4 C	1
51	D207A-B6-19	COPPER TUBING 3/4 CTS X 4 3/4	1
52	D318A-D3-D2	UNION 1/2 C X 1/2 MIPS	1
53	D322F-F2-D1	HEX RED BUSH 1"MIPS X 1/2FIPS	1
54	D317A-E3-D2	ADAPTER 3/4 C X 1/2 MIPS	1
55	D207A-B4-157	COPPER TUBING 1/2 CTS X 39 1/4	1
56	–	–	–
57	D318A-D3D3	UNION 1/2 C X 1/2 C	1
58	D207A-B4-101	COPPER TUBING 1/2 CTS X 25 1/4	1
59	D316A-D3-D3	90° ELBOW 1/2 C	3
60	D207A-B4-9	COPPER TUBING 1/2 CTS X 2 1/4	1

ITEM	PART NO.	DESCRIPTION	QTY.
1	1100-84	STEAM COIL – WASH	1
2	9019-01	STEAM COIL – RINSE	1
3	D326F-F1	LOCKNUT 1" IPS	2
4	D326F-E1	LOCKNUT 3/4" IPS	2
5	D314F-FA-16	NIPPLE 1"IPS X 2 " ALL THD.	2
6	D314F-EA-14	NIPPLE 3/4 IPS X 1 3/4 ALL THD.	2
7	D 2100	STEAM BOOSTER (1-2) (SEE NOTE #1)	1
8	1390-90	BOOSTER SUPPORT	1
9	D316F-F2-F1	90° STREET ELL 1" MIPS X 1" FIPS	1
10	D317A-D3-F2	ADAPTER 1/2 C X 1 MIPS	1
11	D207A-B4-17	COPPER TUBING 1/2 CTS X 4 1/4	1
12	D316A-D4-D3	90° STREET ELL 1/2 FTG C 1/2 C	1
13	D207A-B4-10	COPPER TUBING 1/2 CTS X 2 1/2	1
14	D316A-D3-D2	90° ELBOW 1/2 C X 1/2 MIPS	1
15	D2594	SOLENOID VALVE 1/2 IPS	1
16	D318F-D3-D2	UNION 1/2 C X 1/2 MIPS	1
17	D207A-B4-38	COPPER TUBING 1/2 CTS X 9 1/2	1
18	D323A-G4-D3	RED BUSH 1 1/4 FTG X 1/2 C	1
19	D320A-G3G3J3	TEE 1 1/4 C X 1 1/4 C X 2 C	1
20	D317AJ3-J2	ADAPTER 2" C X 2" MIPS	1
21	D207A-B16-23	COPPER TUBING 2" CTS X 5 3/4	1
22	D2756	"Y" STRAINER 2" IPS	1
23	D314F-JC-00	NIPPLE CLOSE 2" IPS	1
24	D2757	BALL VALVE 2" IPS	1
25	D207A-B10-10	COPPER TUBING 1 1/4 CTS X 2 1/2	1
26	D320A-G3E3F3	TEE 1 1/4 C X 3/4 C X 1 C	1
27	D317A-F4-F2	ADAPTER 1" FTG X 1" MIPS	1
28	D2772	SOLENOID VALVE 1" IPS	1
29	D314F-FS-21	NIPPLE 1" IPS X 2 5/8	1
30	D319F-F1-F1	90° UNION ELL 1" IPS	1

FOR 40° RISE

NOTE :
1. (ITEM #7) ADD SUFFIX "NM" FOR NON-MAGNETIC MACHINES.
2. (ITEM #69) USE PART NO. D2396 AS STANDARD AND PART NO. D2301 WHEN LOW TEMP. CUT-OFF IS SPECIFIED.

SHEET 3 OF 3

REV	ECN NO	DATE
A	979	1.17.94

FILE: PARTS\1390-74

TOLERANCES
FRACTIONS ±1/64
DECIMALS
.XXX ± .005
.XX ± .01
ANGLES ±1/2°
UNLESS OTHERWISE SPECIFIED

TITLE STEAM PIPING WASH & RINSE TANKS

NEXT ASSY 1390-1
REQ'D 1

DWG. NO. 1390-74

MAT'L AS NOTED

SCALE 1=8

USED ON CENTURY

Insinger Machine Company
Philadelphia, PA 19135
(215) 624-4800
FAX (215) 624-6966

DRWN/DATE PG 4.26.93

ITEM	PART NO.	SIZE	DESCRIPTION	QTY.
16	D317A-J4J1	–	ADAPTER 2 CFTG X 2 FPS	1
17	D207A-B12-10	–	COPPER TUBING 1 1/2 CTS X 2 3/8 LG	1
18	D-135	A	DRAIN FLANGE	1
19	D-514	A	GASKET	2
20	D-106	A	DRAIN STRAINER	2
21	D-90	A	GLASS DRAIN STRAINER	2
22	D-134	A	DRAIN FLANGE	1
23	D207A-B12-16	–	COPPER TUBING 1 1/2 CTS 4 LG	1
24	D207A-B16-20	–	COPPER TUBING 2 CTS X 4 7/8 LG	1
25	D332A-H3H3H3	–	Y 45° 1 1/2 C	2
26	D346A-H3-H3	–	ELL 45° 1 1/2 C	1
27	D207A-B12-68	–	COPPER TUBING 1 1/2 CTS X 14 3/4LG	2
28	1133-64	A	DRAIN HANDLE BRACKET	2
29	1390-68	A	DRAIN HANDLE BRACKET	1

ITEM	PART NO.	SIZE	DESCRIPTION	QTY.
1	D305A-H3-H3	–	UNION	1
2	954-1	A	DRAIN ASSEMBLY	3
3	D207A-B12-7	–	COPPER TUBING 1 1/2 CTS X 1 5/8 LG	2
4	D347A-H3-H3	–	90° ELL 1 1/2C	4
5	D207A-B12-65	–	COPPER TUBING 1 1/2 CTS X 16 1/4LG	1
6	D348A-H3H3H3	–	TEE 1 1/2 C	1
7	D207A-B12-37	–	COPPER TUBING 1 1/2 CTS X 9 1/4 LG	1
8	D207A-B12-23	–	COPPER TUBING 1 1/2 CTS X 5 3/4 LG	1
9	D207A-B12-65	–	COPPER TUBING 1 1/2 CTS X 16 1/4LG	1
10	D207A-B12-61	–	COPPER TUBING 1 1/2 CTS X 15 1/4LG	1
11	D207A-B12-83	–	COPPER TUBING 1 1/2 CTS X 20 3/4LG	1
12	D207A-B12-115	–	COPPER TUBING 1 1/2 CTS X 28 3/4 LG	1
13	D348A-H3J3J3	–	TEE 1 1/2C X 2C X 2C	1
14	D347A-J3-J3	–	90° ELL 2C	1
15	D207A-B16-33	–	COPPER TUBING 2 CTS X 8 1/4 LG	1

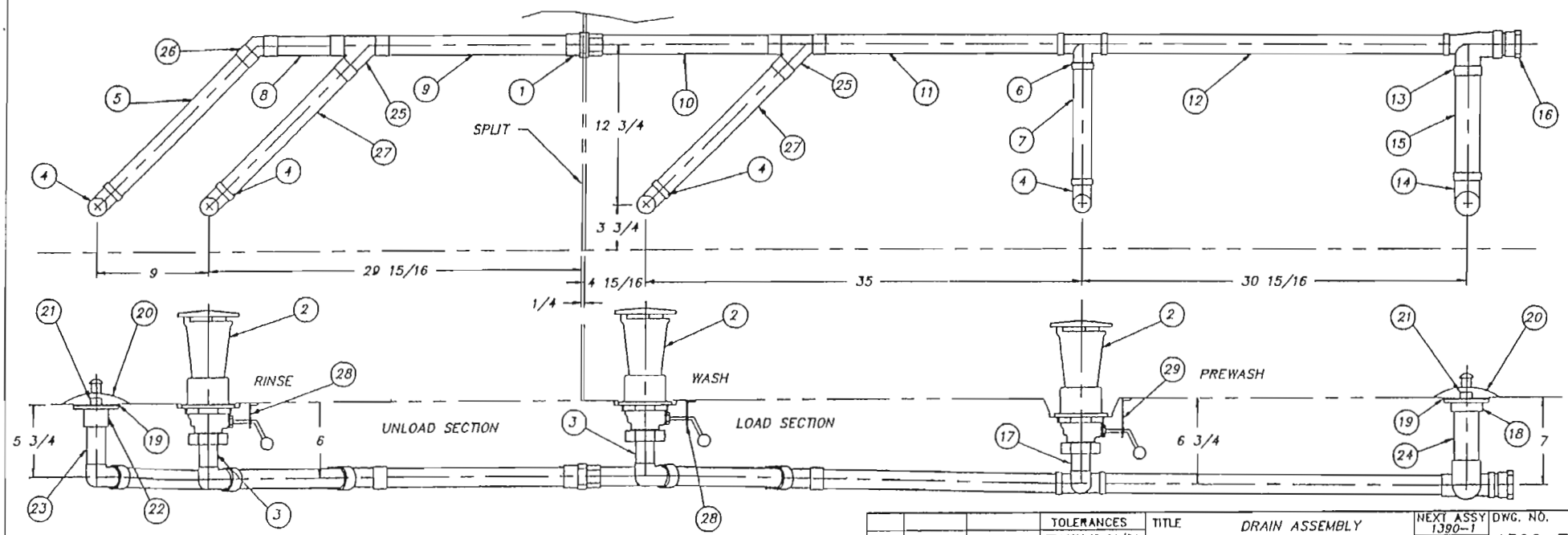

SHEET 1 OF 2
R.H. MACHINE SHOWN

REV	ECN NO	DATE
B	1268	09.22.95
A	986	03.07.94

FILE: PARTS\1390-73

TOLERANCES
FRACTIONS ±1/64
DECIMALS
.XXX ± .005
.XX ± .01
ANGLES ±1/2°
UNLESS OTHERWISE SPECIFIED

TITLE: DRAIN ASSEMBLY PREWASH, WASH, RINSE

NEXT ASSY: 1390-1
REQ'D: 1
DWG. NO.: 1390-73
MAT'L: NOTED
SCALE: 1/8
USED ON: CENTURY

Insinger Machine Company
Philadelphia, PA 19135
(215) 624-4800
FAX (215) 624-6966

DRWN/DATE: PG 4.21.93

ITEM	PART NO.	SIZE	DESCRIPTION	QTY.
16	D317A-J4-J1	–	ADAPTER 2 CFTC X 2 FPS	1
17	D207A-B12-10	–	COPPER TUBING 1 1/2 CTS X 2 3/8 LG	1
18	D-133	A	DRAIN FLANGE	1
19	D-514	A	GASKET	2
20	D-106	A	DRAIN STRAINER	2
21	D-90	A	CLASP DRAIN STRAINER	2
22	D-134	A	DRAIN FLANGE	1
23	D207A-B12-16	–	COPPER TUBING 1 1/2 CTS 4 LG	1
24	D207A-B16-20	–	COPPER TUBING 2 CTS X 4 7/8 LG	1
25	D207A-B12-10	–	COPPER TUBING 1 1/2 CTS X 2 3/8 LG	1
26	D352A-H3H3H3	–	"Y" 45° 1 1/2 C	2
27	D207A-B12-59	–	COPPER TUBING 1 1/2CTS X 14 3/4LG	2
28	1133-64	A	DRAIN HANDLE BRACKET	2
29	1390-88	A	DRAIN HANDLE BRACKET	1

ITEM	PART NO.	SIZE	DESCRIPTION	QTY.
1	D305A-H3-H3	–	UNION	1
2	954-1	A	DRAIN ASSEMBLY	3
3	D207A-B12-7	–	COPPER TUBING 1 1/2 CTS X 1 5/8 LG	1
4	D347A-H3-H3	–	90° ELL 1 1/2C	5
5	D207A-B12-34	–	COPPER TUBING 1 1/2 CTS X 8 1/2 LG	1
6	D348A-H3H3H3	–	TEE 1 1/2 C	1
7	D207A-B12-37	–	COPPER TUBING 1 1/2 CTS X 9 1/4 LG	1
8	D207A-B12-100	–	COPPER TUBING 1 1/2 CTS X 30 3/4 LG	1
9	D207A-B12-161	–	COPPER TUBING 1 1/2CTS X 40 1/4LG	1
10	D207A-B12-13	–	COPPER TUBING 1 1/2 CTS X 3 1/4 LG	1
11	D207A-B12-29	–	COPPER TUBING 1 1/2 CTS X 7 1/4 LG	1
12	D207A-B12-67	–	COPPER TUBING 1 1/2CTS X 16 3/4LG	1
13	D348A-H3H3H3	–	TEE 1 1/2C X 2C X 2C	1
14	D347A-J3-J3	–	90° ELL 2C	1
15	D207A-B18-33	–	COPPER TUBING 2 CTS X 8 1/4 LG	1

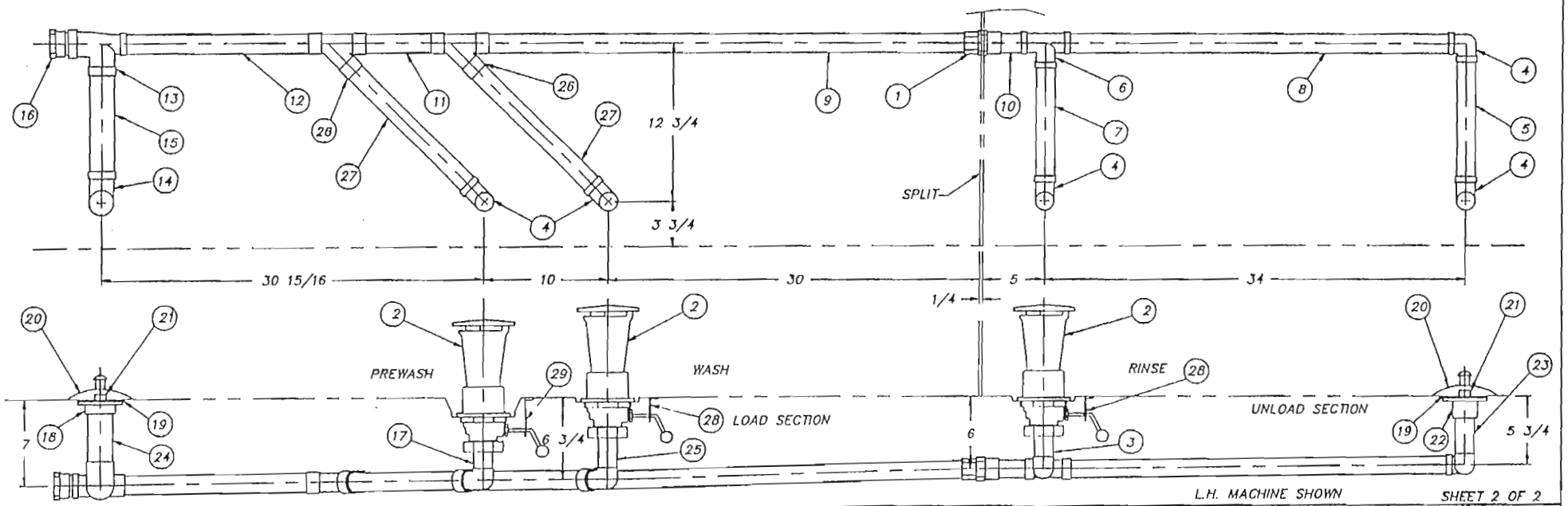

L.H. MACHINE SHOWN

SHEET 2 OF 2

REV	ECN NO	DATE
B	1268	09.22.95
A	986	03.07.94

FILE: PARTS\1390-73

TOLERANCES
FRACTIONS ±1/64
DECIMALS
.XXX ± .005
.XX ± .01
ANGLES ±1/2°
UNLESS OTHERWISE SPECIFIED

TITLE: DRAIN ASSEMBLY PREWASH, WASH, RINSE

MAT'L: NOTED

SCALE: 1/8

NEXT ASSY: 1390-1

REQ'D: 1

DWG. NO.: 1390-73

USED ON: CENTURY

DRWN/DATE: PG 4.21.93

Insinger Machine Company
Philadelphia, PA 19135
(215) 624-4800
FAX (215) 624-8966

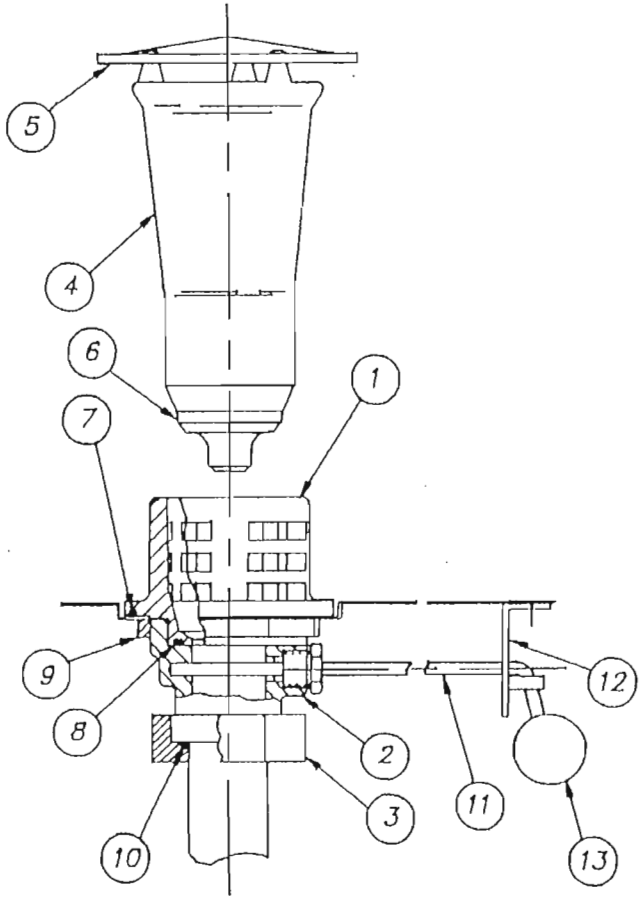

ITEM	PART NO.	DESCRIPTION	QTY.
	954-50	DRAIN ASS'Y (COMPLETE)	–
1	954-50A	UPPER BODY	1
2	954-50B	LOWER BODY	1
3	954-50C	NUT	1
4	954-50D	OVERFLOW TUBE	1
5	D-193	SKIMMER CAP	1
6	D2-557	"U"-CUP SEAL – DRAIN SEAT	1
7	D2-548	"O" RING	1
8	D2-549	"O" RING	1
9	D-305	DRAIN JAM NUT	1
10	D2-550	"O" RING	1
11	1100-79	DRAIN HANDLE ASSEMBLY	1
12	1100-156	BRACKET – W & R	1
	1100-157	BRACKET – PW	1
13	D-2407	BALL	1

REV	ECN NO	DATE

FILE: SKETCHA\SK-2613

TOLERANCES
FRACTIONS ±1/64
DECIMALS
.XXX ±: .005
.XX ±: .01
ANGLES ±1/2°
UNLESS OTHER SPECIF.

TITLE: DRAIN ASSEMBLY

MAT'L: NOTED

NEXT ASSY REQ'D

SCALE: 1/4

DWG. NO. SK-2613

USED ON: RACKLESS "W"

DRWN/DATE: EF 2.01.83

Insinger Machine Company
Philadelphia, PA 19135
(215) 624-4800
FAX (215) 624-6966

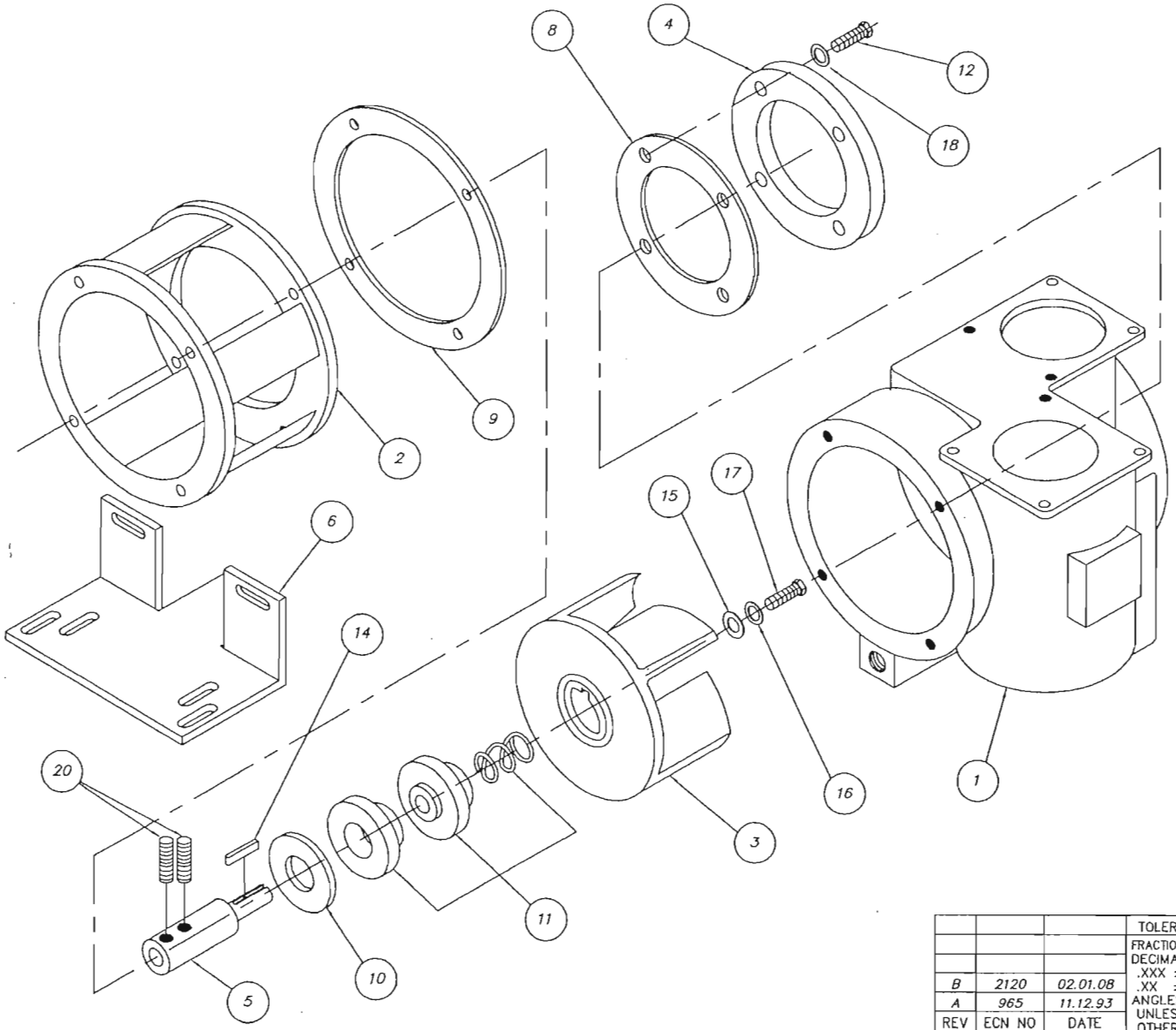

ITEM	PART NO.	DESCRIPTION	QTY.
1	UP-1	PUMP BODY	1
2	D-435	ADAPTER	1
3	NOTED	IMPELLER	1
4	SUP-3	END COVER PLATE	1
5	D3-805	PUMP SHAFT	1
6	D3-816	MOUNTING BRACKET	1
7			
8	UP-8	END COVER GASKET	1
9	UP-9	HOUSING COVER GASKET	1
10	UP-13	FLINGER	1
11	UP-15	CERAMIC SEAL	1
12	D309C-JC-6A	END COVER BOLT	12
13			
14	D302-1	KEY	1
15	D3-824A	WASHER	1
16	D313C-J2	LOCKWASHER	1
17	D309C-JC-5A	IMPELLER BOLT	1
18	D313A-J1	WASHER	12
19			
20	D309C-GC-2H	SET SCREW	2

NOTE:
FOR COMPLETE ASSEMBLY USE PART NO. D2471A
IMPELLER PART NO. & SIZE:
SUP-2A 4 1/2" (MODULAR, SPEEDER)
SUP-9A 5" (ADMIRAL WASH, SUPER W&R, CLIPPER/MASTER /CENTURY PW ONLY)

REV	ECN NO	DATE
B	2120	02.01.08
A	965	11.12.93

FILE: SKETCH\SK-2456A

TOLERANCES
FRACTIONS ±1/64
DECIMALS
.XXX ± .005
.XX ± .01
ANGLES ±1/2°
UNLESS OTHERWISE SPECIFIED

TITLE PUMP ASSEMBLY MODEL 2 1/2 SUP

MAT'L

NEXT ASSY

REQ'D 1

SCALE FULL

DWG. NO. SK-2456A

USED ON

DRWN/DATE PG 8.29.94

Insinger
Philadelphia, PA 19135
(215) 624-4800
FAX (215) 624-6966

ITEM	PART NO.	SIZE	DESCRIPTION	QTY.
1	D317A–H2–H4	–	FTG. ADAPTER 1 1/2 MIPS X 1 1/2 FTG	1
2	D316A–H3	–	ELBOW 90° 1/2 C	1
3	D207A–B12–6	–	COPPER TUBING 1 1/2 CTS X 1 1/2 LG	1
4	D–514	A	GASKET	1
5	D–134	A	FLANGE, TANK	1
6	963–38	A	FLANGE, STRAINER	1

ITEM	PART NO.	SIZE	DESCRIPTION	QTY.
7	D309C–JC–10	–	HEX HD SCR 3/8–16 X 1 1/4 LG	4
8	D313A–1J	–	COPPER WASHER 3/8	4
9	D312C–JC–5	–	LOCKNUT 3/8–16	4
10	D2–541	A	STRAINER	1
11	D3–825	A	CLASP	1
12	D312C–EC–6	–	ACORN NUT #10–32 S/S	1

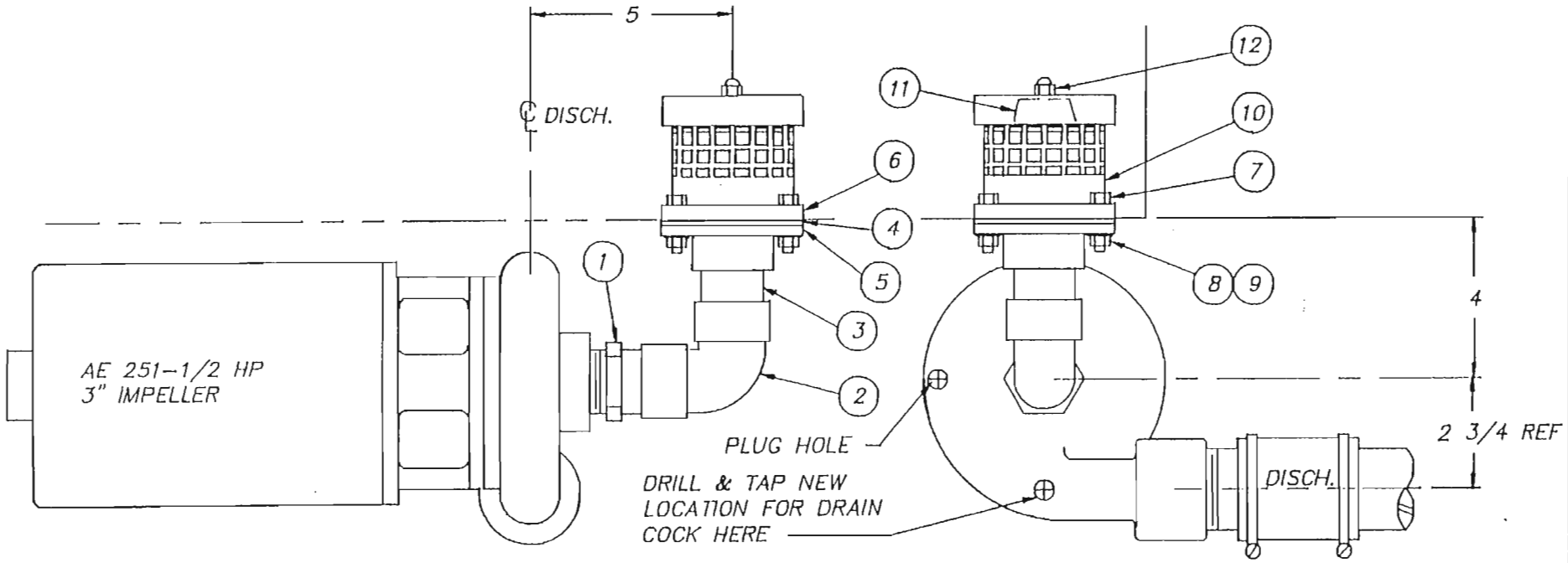

USED ON :
SPEEDER 86–3
ADMIRAL 66–3

D	898	7.16.93
REV	ECN NO	DATE
FILE: PARTS\1182–13		

TOLERANCES
FRACTIONS ±1/64
DECIMALS
.XXX ± .005
.XX ± .01
ANGLES ±1/2°
UNLESS OTHERWISE SPECIFIED

TITLE: SUCTION LINE ASS'Y – PREWASH

MAT'L: NOTED

NEXT ASSY: REQ'D NOTED

SCALE: 1=4

DWG. NO.: 1182–13

USED ON: NOTED

DRWN/DATE: PG 7.15.93

Insinger Machine Company
Philadelphia, PA 19135
(215) 624–4800
FAX (215) 624–6966

ITEM	PART NO.	DESCRIPTION	QTY.
1	D2-541	STRAINER	1
2	D2-1350	STRAINER FLANGE	1
3	D-530	GASKET	1
4	D313A-1J	WASHER COPPER 3/8	2
5	D309C-CJ-10A	HEX HD SCR 3/8-16 X 1 1/4	2
6	D309C-CJ-11A	HEX HD SCR 3/8-16 X 1 3/8	2
7	D312C-JC-5	HEX LOCKNUT 3/8-16	2

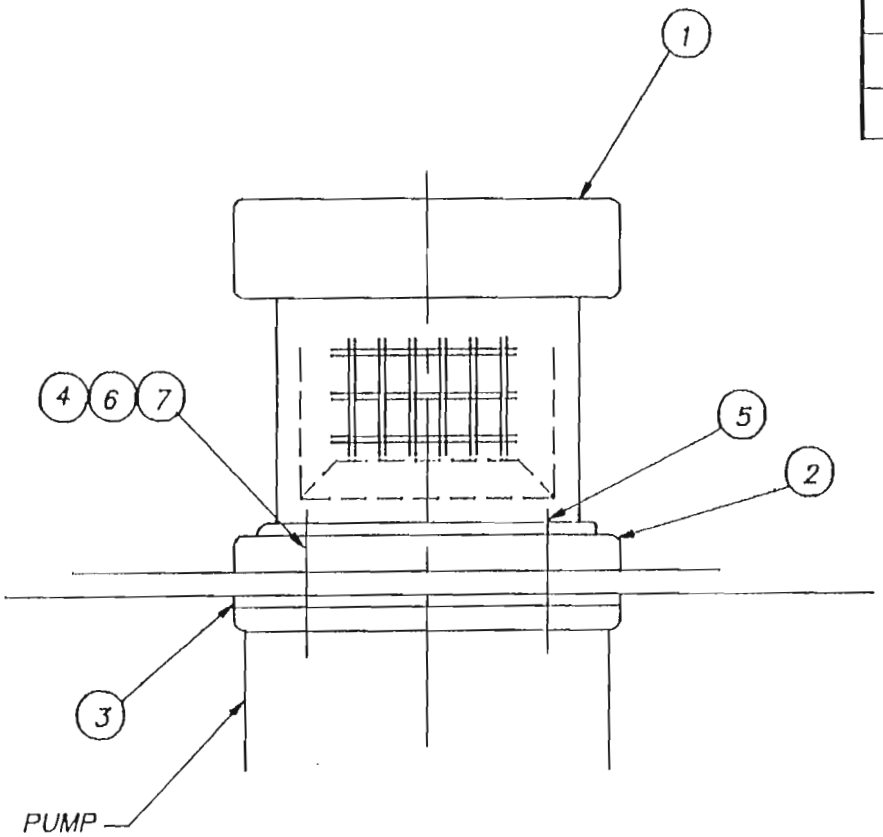

USED ON CLIPPER RC 21 W

REV	ECN NO	DATE

FILE: PARTS\1100-76

TOLERANCES
FRACTIONS ±1/64
DECIMALS
.XXX ± .005
.XX ± .01
ANGLES ±1/2°
UNLESS OTHERWISE SPECIFIED

TITLE	PUMP SUCTION ASSEMBLY	NEXT ASSY REQ'D	DWG. NO. 1100-76
MAT'L	NOTED	SCALE 1=2	USED ON SEE ABOVE
Insinger Machine Company	Philadelphia, PA 19135 (215) 624-4800 FAX (215) 624-6966	DRWN/DATE PG	1.4.92

In order to insure the proper operation of your INSINGER dishwasher, it is necessary that the LIQUID LEVEL FLOAT be wiped free of any residue and/or moisture at each cleaning. This should be done, preferably, after each use of the machine, or, at a minimum, once each day.

The LIQUID LEVEL FLOAT is located below the scrap screens in those tanks which contain water heating devices (coils, steam injectors, or electric immersion heaters) and pump inlet strainers. They are usually located, in rackless and rack conveyor style machines, on the inside tank wall, at approximately water level, opposite and parallel to the inspection doors. In the door, stationary rack, type machines, the LIQUID LEVEL FLOAT may be found beneath the scrap screen.

Below is a depiction of the LIQUID LEVEL FLOAT and the surfaces which must be wiped clean.

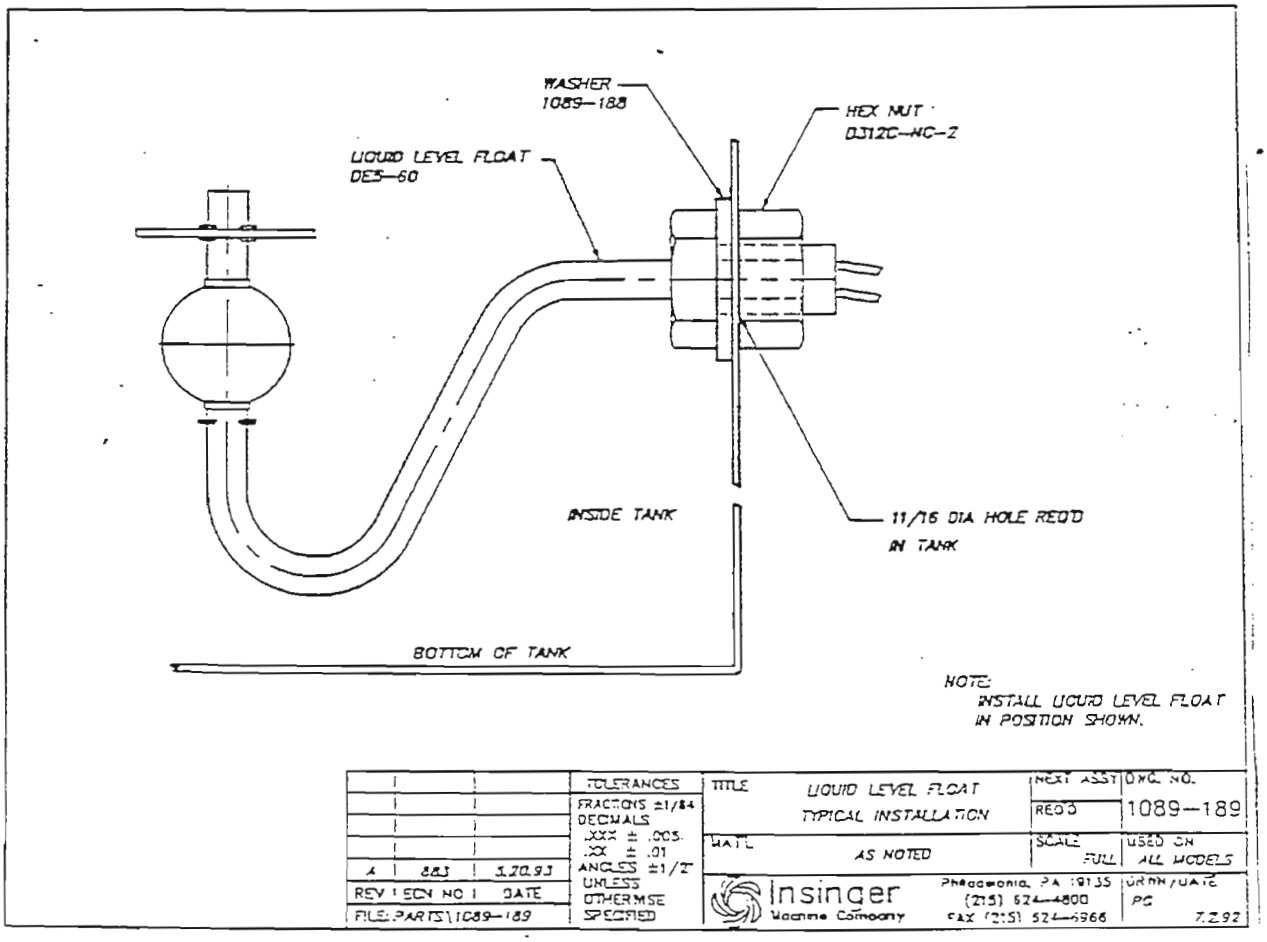

ITEM	PART NO.	SIZE	DESCRIPTION	QTY.
1	D2-867	A	SWITCH BRACKET	2
2	DEB-47	--	SWITCH, START/STOP	2
3	D309C-GC-5G	--	WELDSTUD 1/4-20 X 5/8 LG	4
4	D312C-GC-5	--	LOCKNUT 1/4-20	4

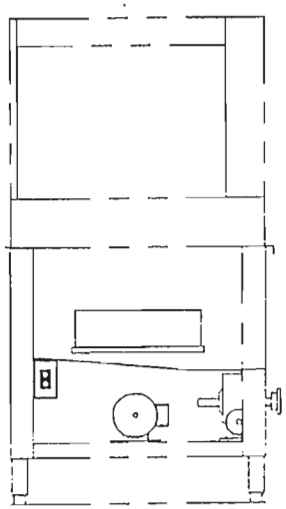

UNLOAD END

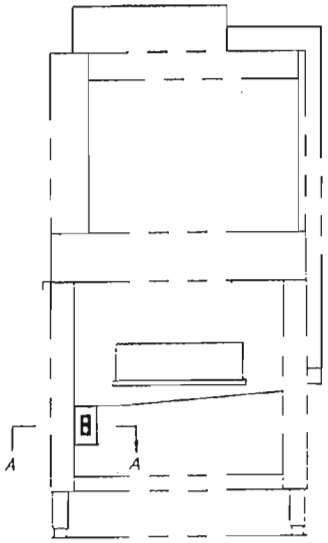

LOAD END

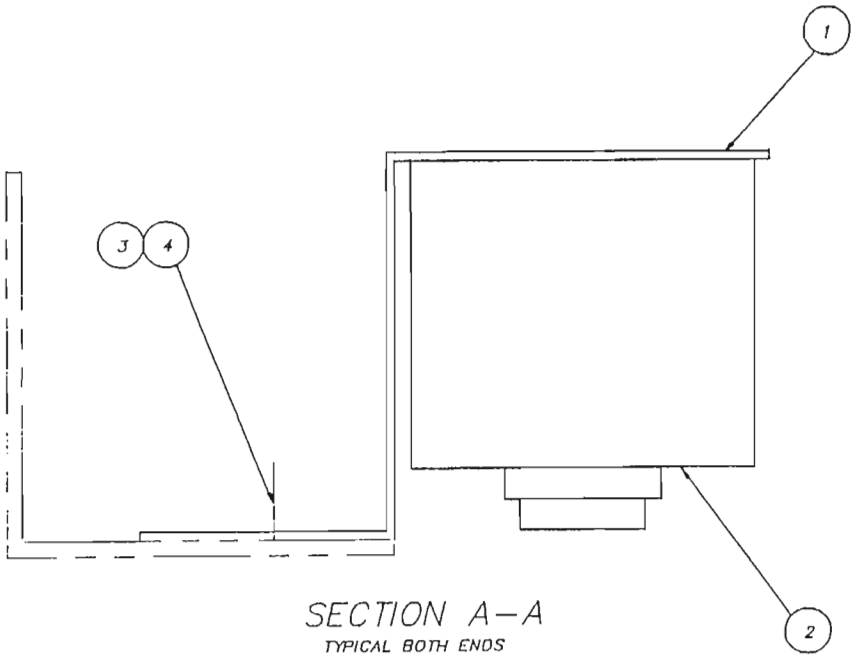

SECTION A-A

TYPICAL BOTH ENDS

			TOLERANCES	TITLE START/STOP STATION	NEXT ASSY 1390-1	DWG. NO.
			FRACTIONS ±1/64 DECIMALS .XXX ± .005 .XX ± .01 ANGLES ±1/2° UNLESS OTHERWISE SPECIFIED		REQ'D 1	1390-95
				MAT'L NOTED	SCALE 1=16	USED ON CENTURY
REV	ECN NO	DATE		Insinger Machine Company	Philadelphia, PA 19135 (215) 624-4800 FAX (215) 624-8986	DRWN/DATE PG 9.3.93
FILE: PARTS\1390-95						

NO	NAME	DWG. NO.	REQ.
1	RACK SECTION ROD	DWG. 1100-138	2
2	UPPER ROD	DWG. D3-810	1
3	CENTER PEG W/ MTG. HOLES	DWG. D2-536	1
4	END PEG	DWG. D2-536 C	1
5	END PEG (NOT SHOWN)	DWG. D2-536 D	1
6	DRIVE SCREW RD. HD. TYPE U	#8-32 x 3/8 LG	2
7	ROD PIN	DWG. D2-852	2
8	RACK SECTION PLATE	DWG. D2-736	2
9	CENTER PEG W/O HOLES	DWG. D2-536 N	6

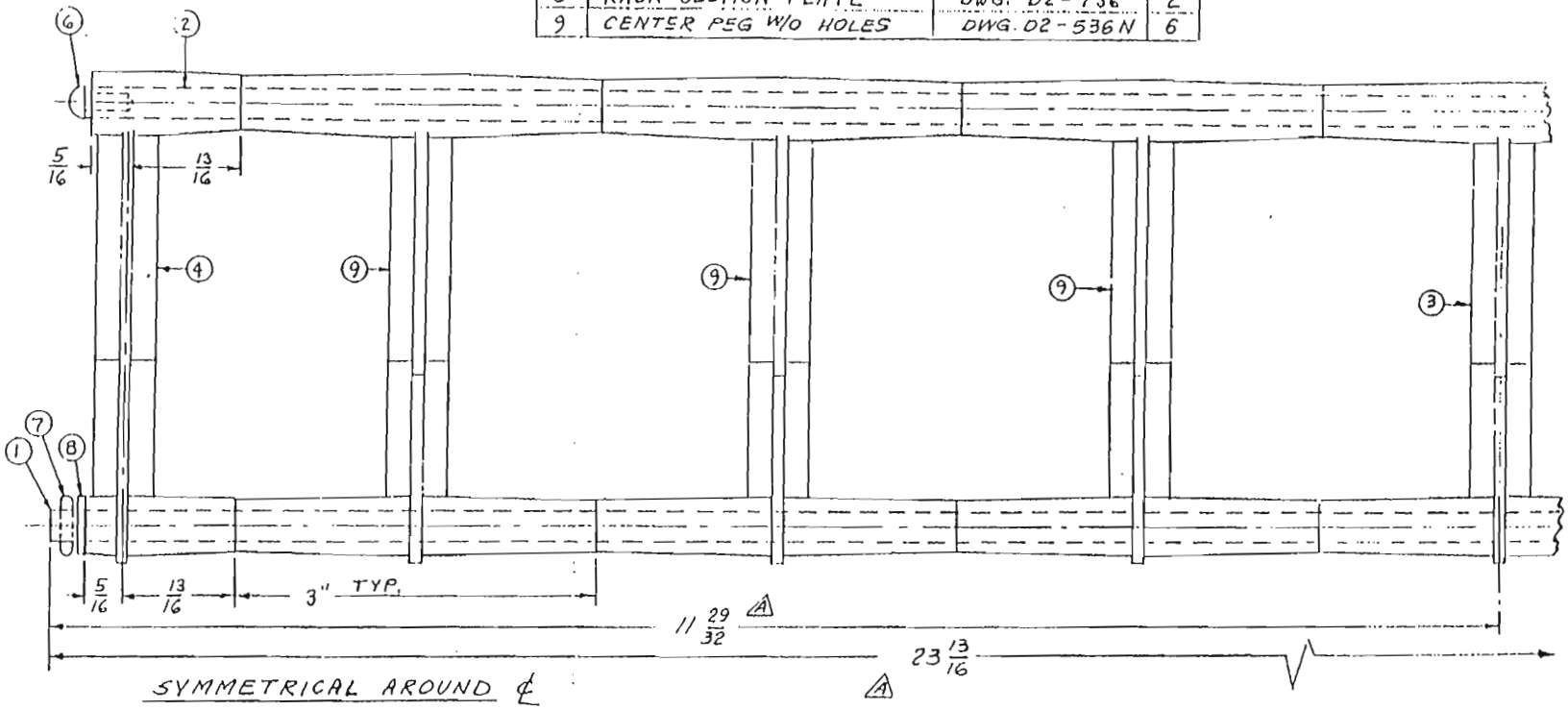

(SAME AS D-2463)

MACHINE RC MACHINE W			DWG. NO. 1100-137
TITLE POLY RACK SECTION - FIRE RETARDENT			PATT. NO.
MAT'L —	REQ. —	SCALE 1/1	DRWN. RAF 9.15.83
INSINGER MACHINE CO. PHILA., PA. 19135			CHKD.
			APPD.

QTY. (1) WAS (7)(ITEM # 3), AND
ADDED ITEM # 9 RAF 1.10.84
29 13/16 WAS 24 1/16, 11 29/32 WAS 12 1/32 RAF 1.2.84

NO.	DESCRIPTION	PART NO.	REQ.
1	ROD - RACK SECTION	DWG. 1100-138	2
2	PEG - CENTER	DWG. D2-536G	1
3	PEG - END	DWG. D2-536J	1
4	PEG - END (NOT SHOWN)	DWG. D2-536K	1
5	PIN - ROD	DWG. D2-852	2
6	PLATE - RACK SECTION	DWG. D2-736	2
7	PEG - INTERMEDIATE	DWG. D2-536H	6

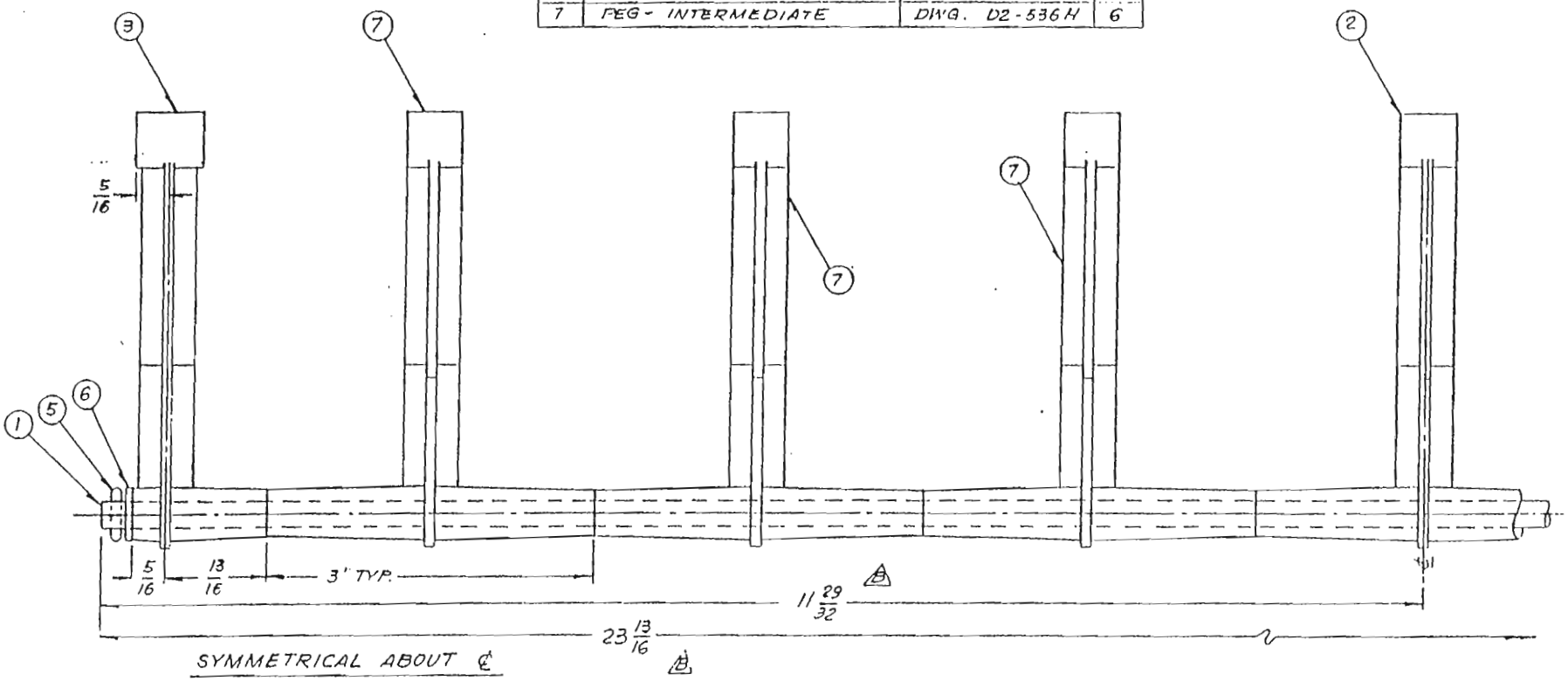

(SAME AS D-2510)

TOLERANCES	TITLE	PATT NO	DWG. NO.
FRACTIONS ± 1/64	POLY RACK SECTION ASS'Y.	REQ. —	1100-139
DECIMAL ± .005	MATL. NOTED	SCALE 1/2	USED ON CLIPPER "W" MASTER
ANGULAR ± 1/2°	INSINGER MACHINE CO. PHILA., PA. 19135 (215) 624-4800		RAF 9.15.83
UNLESS OTHERWISE SPECIFIED			

2. 23 13/16 WAS 24 1/16, 11 29/32 WAS 12 1/32 RAF 1.2.84

1. D2-536J WAS D2-536C (ITEM # 3) AND D2-536K WAS D2-536D (ITEM # 4) RAF 11.9.84

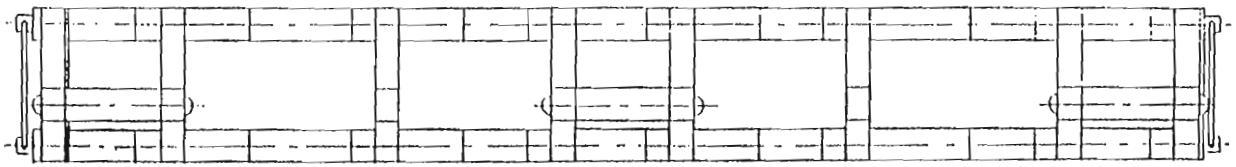

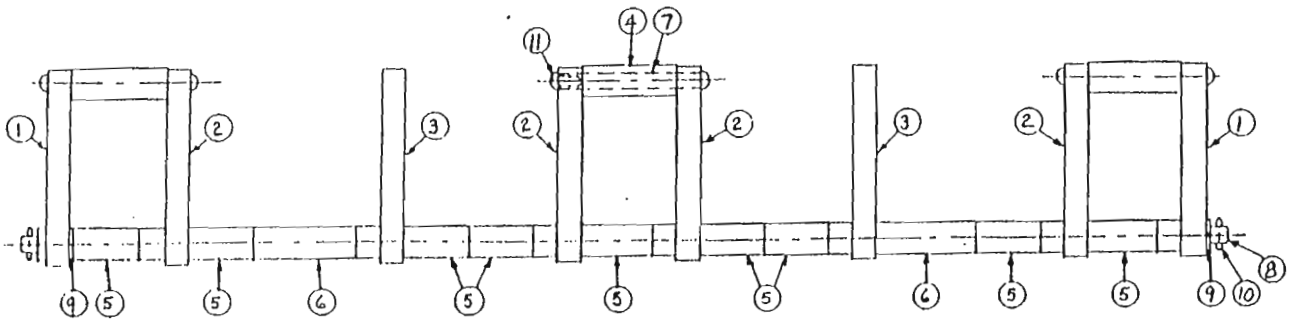

NO.	NAME	DWG. NO.	REQ.
1	PEG - END	D-593 / LONG BOSS / SHORT BOSS	2
2	PEG	D-594 LONG	4
3	PEG (RC-15-222)	D-2167 LONG	2
4	SPACER 1 7/32 LG	D-595	3
5	SPACER 1 1/32 LG	D-592 SHORT	18
6	SPACER 1 21/32 LG	D-592 LONG	4
7	UPPER ROD	D2-895	3
8	RACK SECT. ROD	D2-854	2
9	RACK SECT. PLATE	D2-736	2
10	RACK SECT. ROD PIN	D2-852	2
11	DRIVE SCREW #8-32 x 3/8 LG	RD. HD. TYPE U	6

MACHINE CLIPPER RC-21			DWG. NO. 997-5
TITLE POLY RACK SECTION ASSY.			PATT. NO.
MAT'L —	REQ. —	SCALE 1/2	DRWN. B.F. 5.22.79
INSINGER MACHINE CO. PHILA., PA. 19135			CHKD.
			APPD.

PC. #	NAME	DWG. NO. OR SIZE	REQ.
1	BASE ROD	3/16 DIA. S/S ROD	2
2	RACK SECTION BRACKET	DWG. D2-749	2
3	RACK REST	3/16 DIA. S/S ROD	1
4	PEG	3/16 DIA. S/S ROD	10

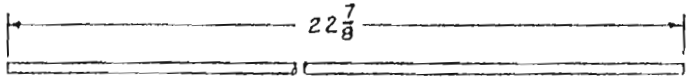

PC # 3 - 1 REQ'D

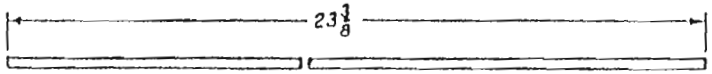

PC # 1 - 2 REQ'D

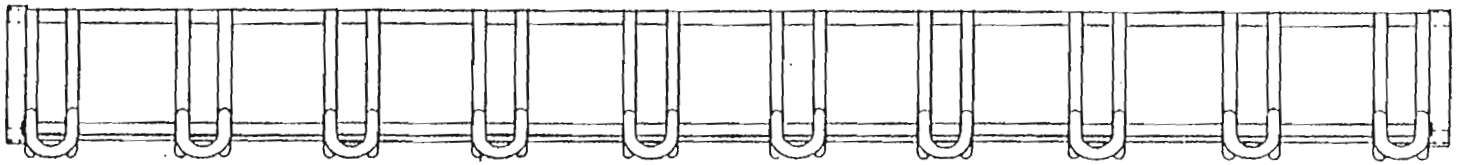

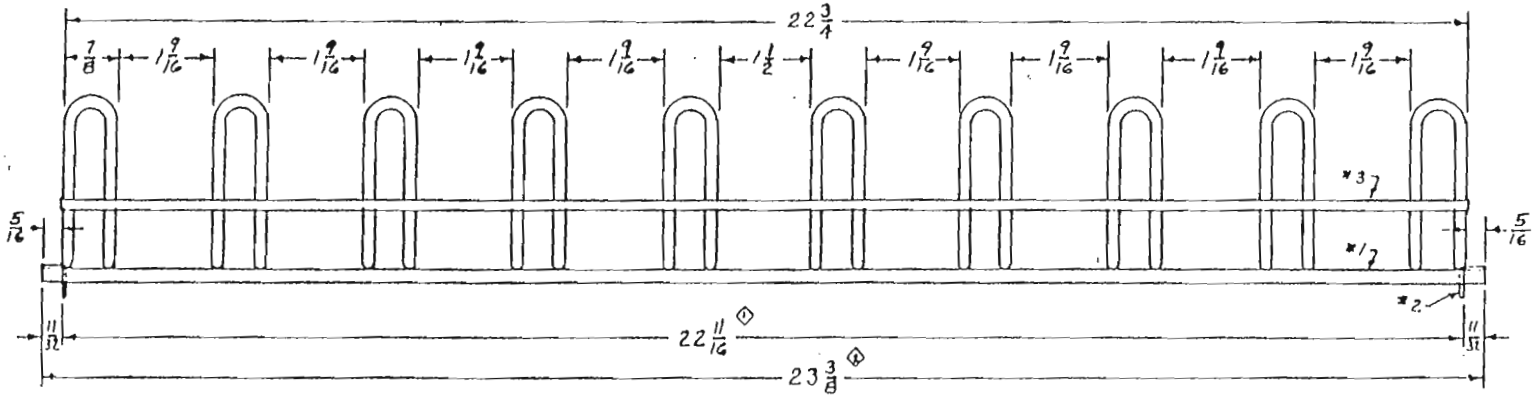

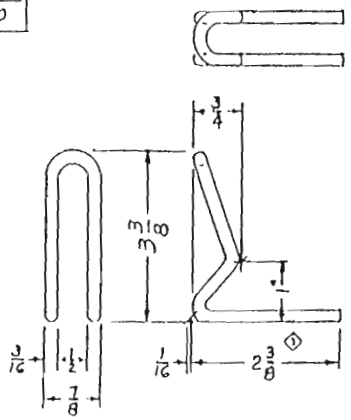

PC. # 4 - 10 REQ'D
3/16 DIA. S/S ROD APPROX. 11" LG

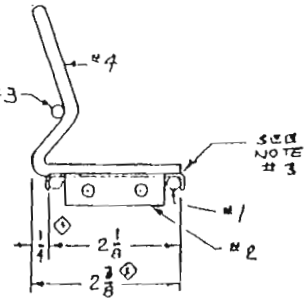

NOTE: 1. COMPLETED ASS'Y MUST BE SQUARE & STRAIGHT
2. THE SYMBOL ② DENOTES CRITICAL DIMENSIONS THAT AFFECT FUNCTION AND FIT. THERE ARE 5 CRITICAL DIMENSIONS ON THIS PART.
3. BASE OF PIECE # 4 MUST BE TRIMMED FLUSH TO TANGENT OF PIECE # 1.

FIRST USED ON
FOLDER

(SAME AS 1100-198)

CLIPPER, MASTER "W"		901-79
RACK SECTION ASSEMBLY & DETAILS		
NOTED	1/2	RA 9.19.85
INSINGER MACHINE CO.		

① ECN # 53 6.28.88

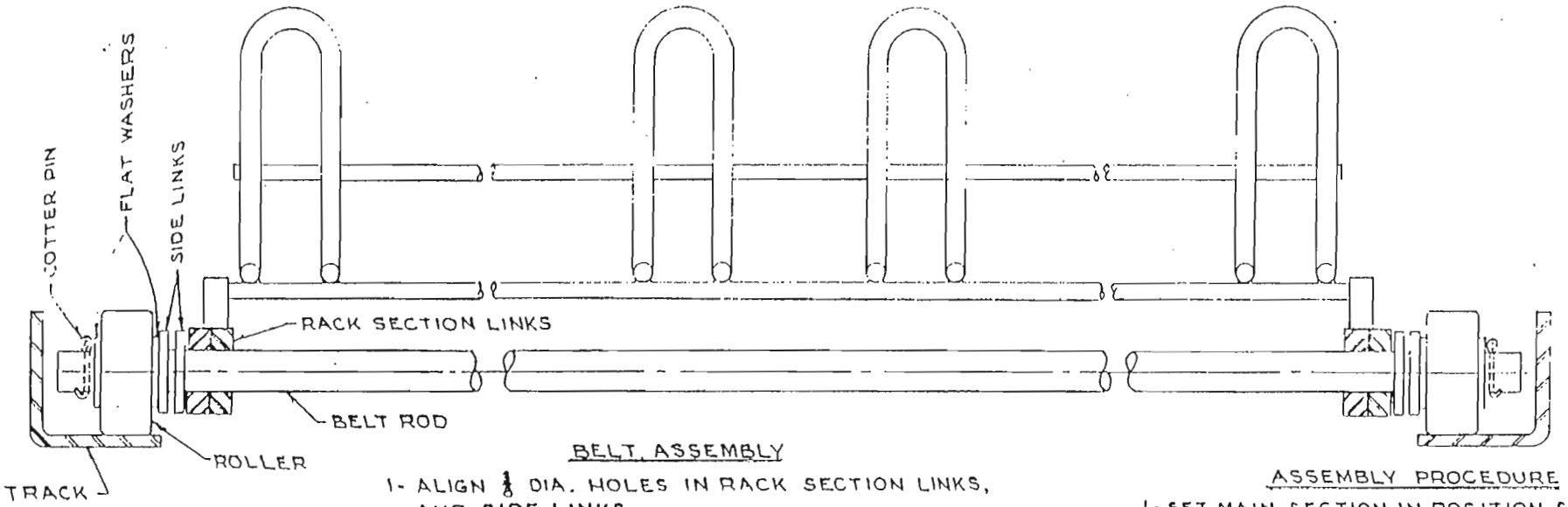

BELT ASSEMBLY

1- ALIGN $\frac{1}{8}$ DIA. HOLES IN RACK SECTION LINKS, AND SIDE LINKS.
2- LIFT BELT SO HOLES ARE ABOVE TRACK.
3- INSERT BELT ROD THRU SIDE LINKS & RACK SECTION LINKS.
4- INSTALL FLAT WASHERS & ROLLERS AS SHOWN.
5- INSTALL COTTER PINS.

ASSEMBLY PROCEDURE

1- SET MAIN SECTION IN POSITION & CHECK LEVELNESS. LEVEL MACHINE BY TURNING ADJUSTABLE FEET UP & DOWN.
2- LOOSELY BOLT LOAD & UNLOAD SECTIONS TOGETHER AT BASE FRAME & DOOR OPENINGS. BE SURE TO APPLY GASKET SEALER LIBERALLY.
3- LEVEL LOAD & UNLOAD SECTIONS, ALIGN TRACKS & THEN FASTEN BOLTS SECURELY.
4- LOOSEN BELT TAKE UP BOLTS & JOIN CONVEYOR BELT IN 4 PLACES (SEE BELT ASSEMBLY) ADJUST TAKE UP BOLTS TO REMOVE EXCESS SLACK. DO NOT OVERTIGHTEN.
5- UNIONS OR DISCONNECTS HAVE BEEN PROVIDED WHERE SECTIONS JOIN. CONNECT ALL PIPING & CONDUIT.
6- CONNECT WIRES AS PER WIRING DIAGRAM.

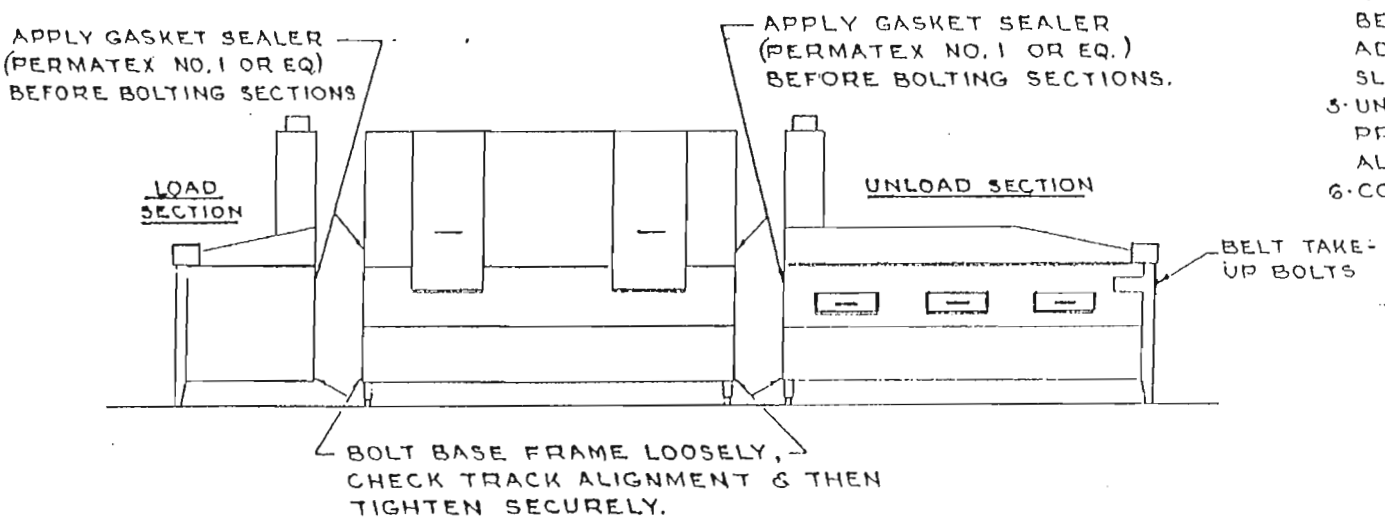

TYPICAL ASSEMBLY PROCEDURE FOR RACKLESS MACHINES

INSINGER MACHINE CO.
PHILA., PA. 19135

SK-2650

CB 7-24-84

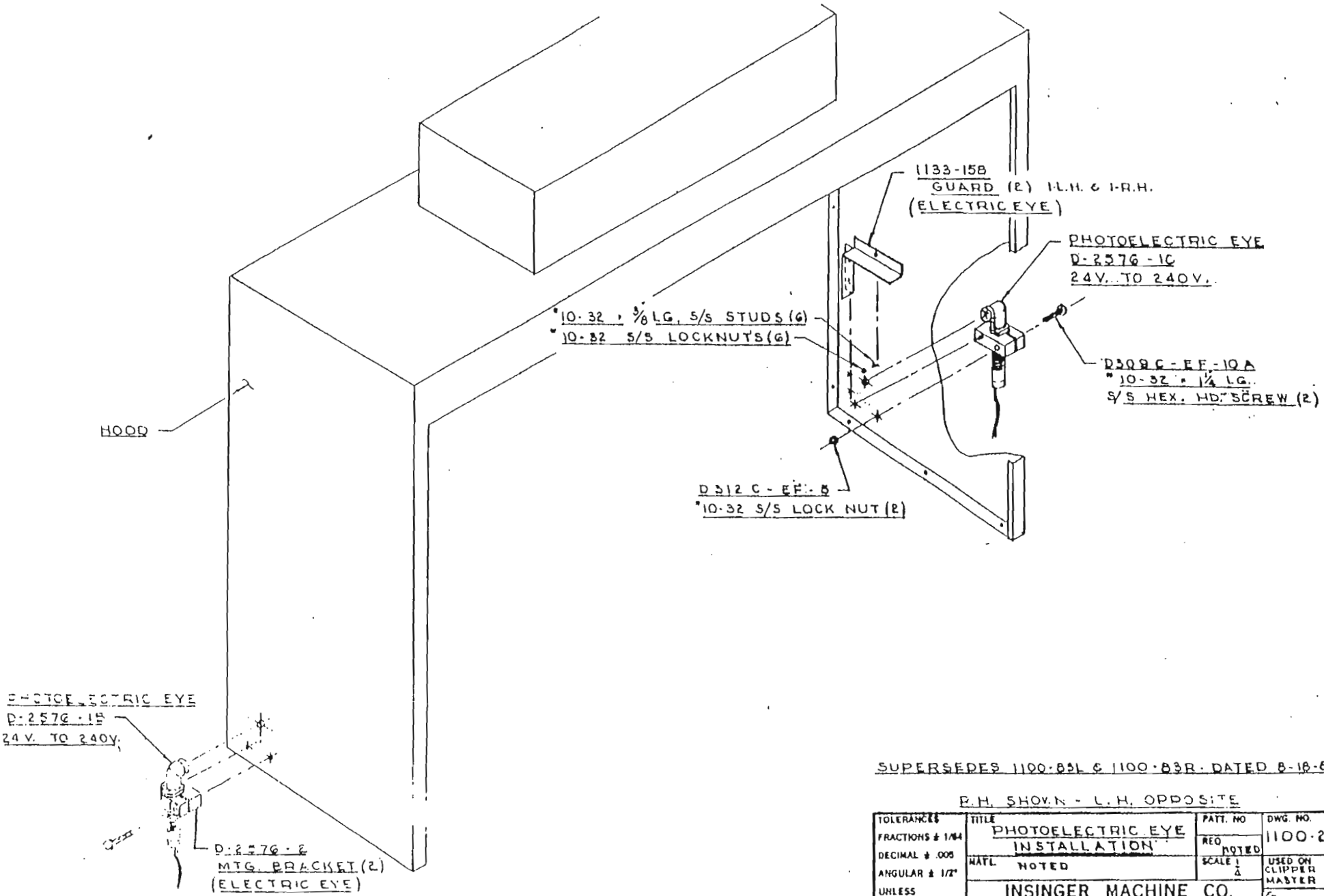

SUPERSEDES 1100-83L & 1100-83R DATED 8-18-83

R.H. SHOWN - L.H. OPPOSITE

TOLERANCES FRACTIONS ± 1/64 DECIMAL ± .005 ANGULAR ± 1/2° UNLESS OTHERWISE SPECIFIED	TITLE PHOTOELECTRIC EYE INSTALLATION	PATT. NO REQ NOTED	DWG. NO. 1100-265
	MATL NOTED	SCALE 1/4	USED ON CLIPPER MASTER W
	INSINGER MACHINE CO. PHILA., PA. 19135 (215) 624-4800		5-4-88

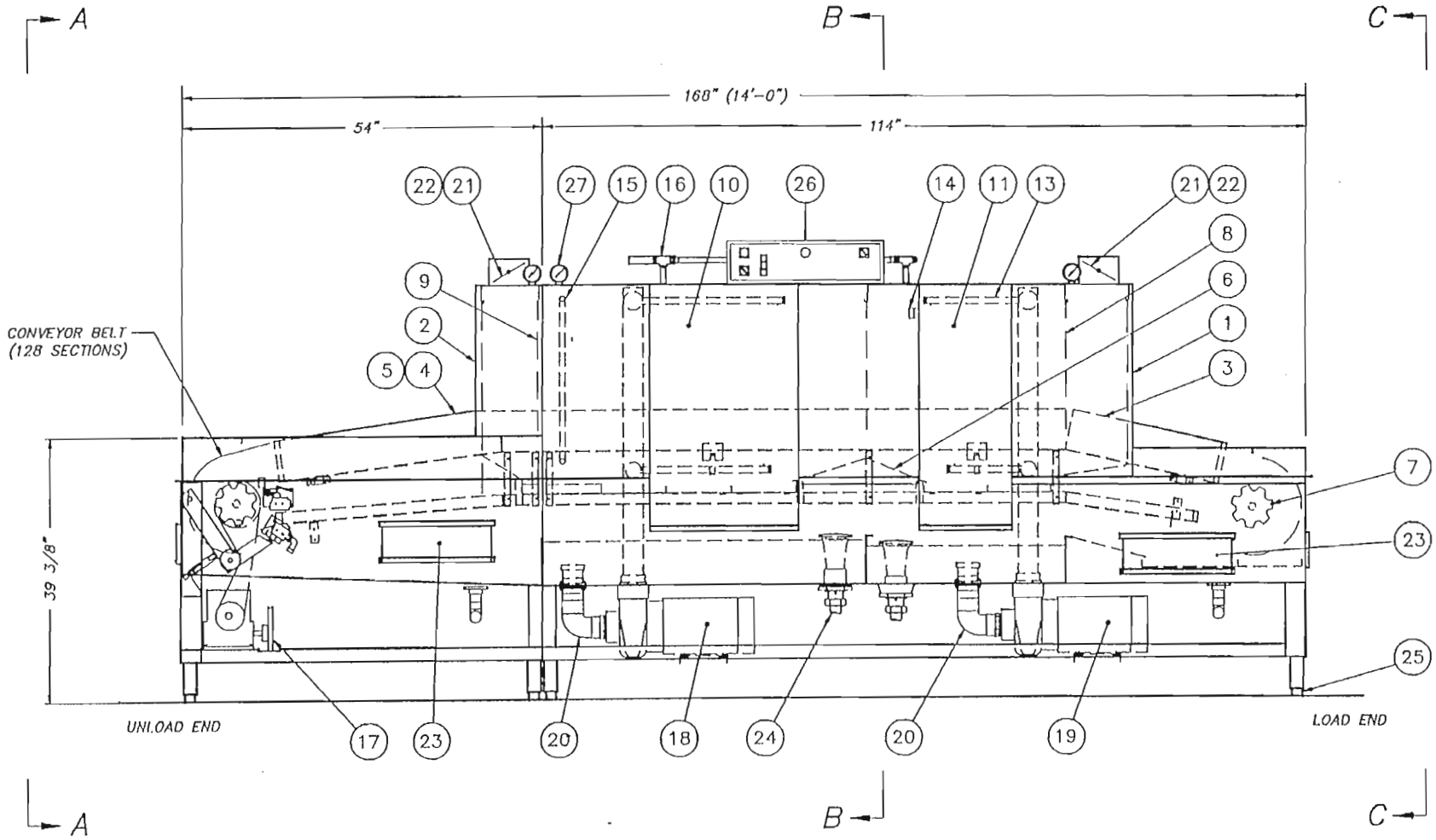

SHEET 1 OF 3

	OPTION	DWG No	SIZE
1	ELECTRIC HEATER LOCATIONS	1462-58	B
2	STEAM PIPING-COILS	1462-86	B
3	STEAM PIPING-INJECTORS	1462-72	B
4	CLOSE-OFF PANELS	1462-95	B
5	CONVEYOR W/SILVERWARE TROUGH	1457-1	B

REV	ECN NO	DATE

FILE: PARTS\1462-1

TOLERANCES
FRACTIONS ±1/64
DECIMALS
.XXX ± .005
.XX ± .01
ANGLES ±1/2°
UNLESS OTHERWISE SPECIFIED

TITLE: DEFENDER R.H. MACHINE

MAT'L

NEXT ASSY

REQ'D

SCALE: 1=16

DWG. NO. 1462-1

USED ON DEFENDER 14

DRWN/DATE YC 2.25.97

Insinger Machine Company
Philadelphia, PA 19135
(215) 624-4800
FAX (215) 624-6966

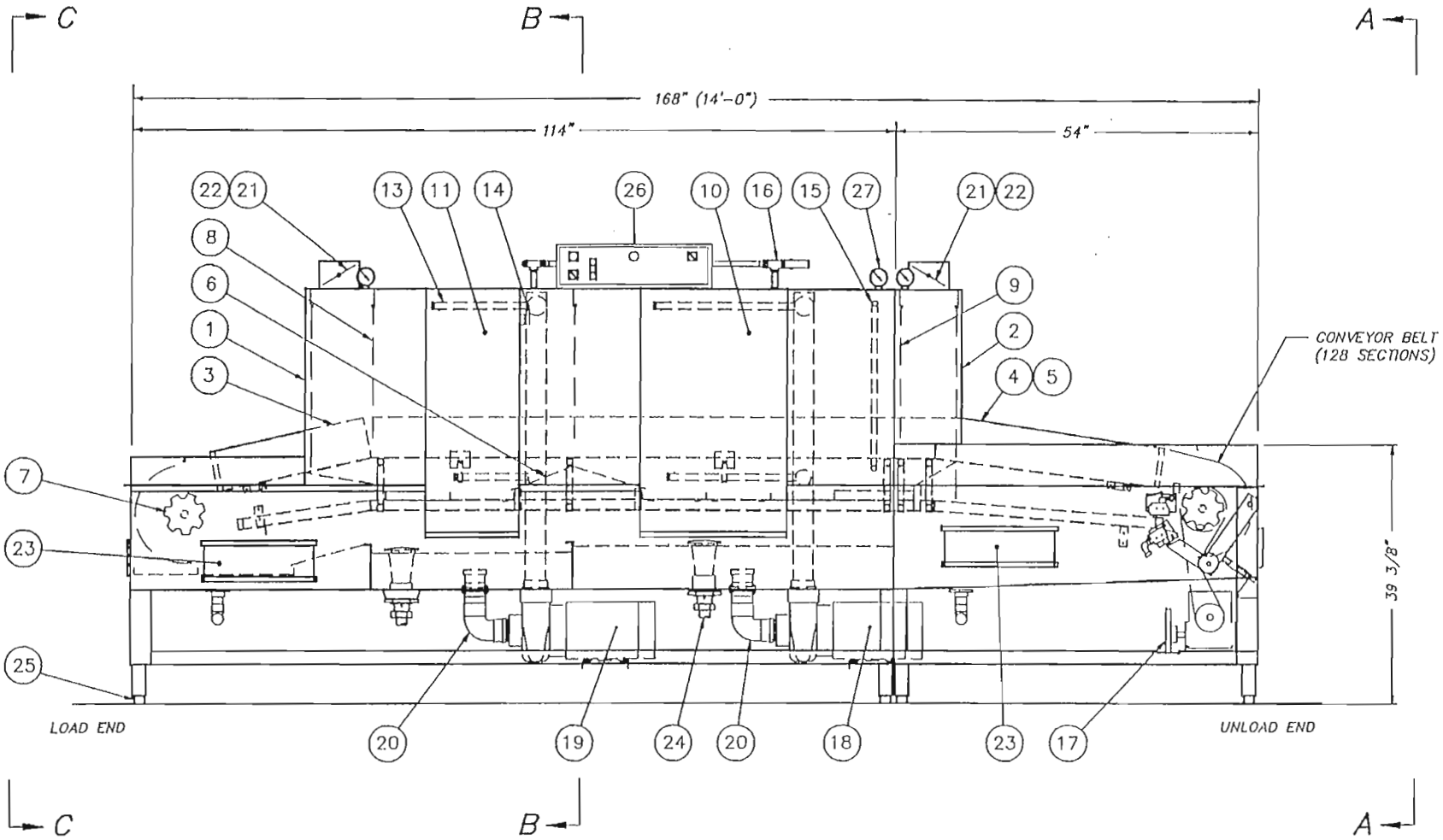

SHEET 2 OF 3

	OPTION	DWG No	SIZE
1	ELECTRIC HEATER LOCATIONS	1462-58	B
2	STEAM PIPING-COILS	1462-86	B
3	STEAM PIPING-INJECTORS	1462-72	B
4	CLOSE-OFF PANELS	1462-95	B
5	CONVEYOR W/SILVERWARE TROUGH	1457-1	B

REV	ECN NO	DATE

FILE: PARTS\1462-1

TOLERANCES
FRACTIONS ±1/64
DECIMALS
.XXX ± .005
.XX ± .01
ANGLES ±1/2°
UNLESS OTHERWISE SPECIFIED

TITLE DEFENDER L.H. MACHINE

MAT'L

NEXT ASSY

REQ'D

SCALE 1=16

DWG. NO. 1462-1

USED ON DEFENDER 14

DRWN/DATE YC 2.25.97

Insinger Machine Company
Philadelphia, PA 19135
(215) 624-4800
FAX (215) 624-6966

ITEM	PART NO.	SIZE	DESCRIPTION	QTY.
1	1462-2	B	SHELL ASSEMBLY, LOAD SECTION	1
2	1462-3	B	SHELL ASSEMBLY, UNLOAD SECTION	1
3	1462-4	B	TRACK INSTALLATION, LOAD SECTION	1
4	1462-5	B	TRACK INSTALLATION, UNLOAD SECTION (D-17)	1
5	1462-74	B	TRACK INSTALLATION, UNLOAD SECTION (D-14)	1
6	1462-7	B	BAFFLES & SCRAP SCREENS, LOAD SECTION	1
7	1462-21	B	DRIVEN SHAFT ASSEMBLY	1
8	1462-9	B	CURTAIN & BAFFLE INSTALL. LOAD SECTION	1
9	1462-10	B	CURTAIN & BAFFLE INSTALL. UNLOAD SECTION	1
10	1462-42	A	DOOR 23"	1
11	1390-32	A	DOOR 15"	1
12	1462-32	A	WEIR PLATE INSTALLATION	1
13	1462-82	B	DISCHARGE LINE ASSY. LOAD SECTION	1
14	D2715	A	DOOR LATCH	4
15	1462-59	B	FINAL RINSE ASSEMBLY	1
16	1462-60	B	AUTO TANK FILL ASSEMBLY	1
17	1390-72	B	CONVEYOR DRIVE ASSEMBLY	1
18	3091-K305	--	PUMP WASH	1
19	3043-K038	--	PUMP PREWASH	1
20	1462-69	A	PUMP SUCTION ASSEMBLY	2
21	D2-728	A	VENT DAMPER BLADE	2
22	D2-831	A	DAMPER ASSEMBLY	2
23	1100-94	A	TANK DOOR	4
24	1462-70	B	DRAIN ASSEMBLY	1
25	D2587	A	ADJUSTABLE FOOT ASSY	8
26	SEE SPEC.	B	CONTROL BOX	1
27	D2390	A	THERMOMETER	3
28	1438-6	B	ELECTRICAL CHANNEL - STEAM	1
	1438-7	B	ELECTRICAL CHANNEL - ELECTRIC	1
29	1462-95	B	CLOSE-OFF PANELS	1
30	1390-95	B	START/STOP STATION	1

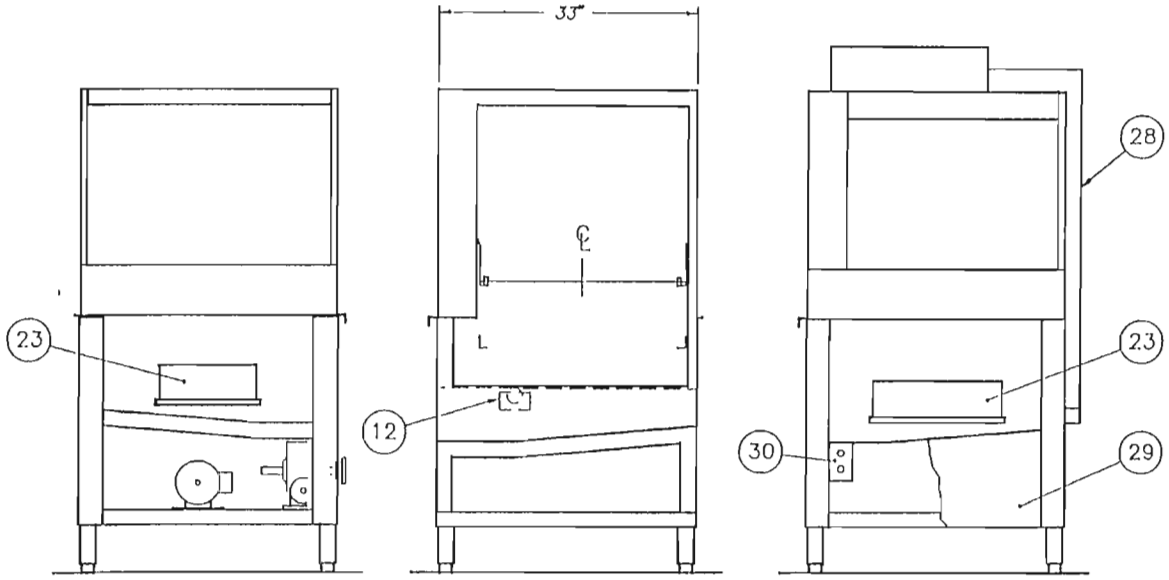

VIEW A-A

VIEW B-B

VIEW C-C

SHEET 3 OF 3

REV	ECN NO	DATE

FILE: PARTS\1462-1

TOLERANCES
FRACTIONS ±1/64
DECIMALS
.XXX ± .005
.XX ± .01
ANGLES ±1/2°
UNLESS OTHERWISE SPECIFIED

TITLE: DEFENDER R.H. MACHINE

NEXT ASSY / REQ'D

MAT'L

SCALE 1=16

DWG. NO. 1462-1

USED ON

Insinger Machine Company
Philadelphia, PA 19135
(215) 624-4800
FAX (215) 624-6068

DRWN/DATE YC 2.26.97

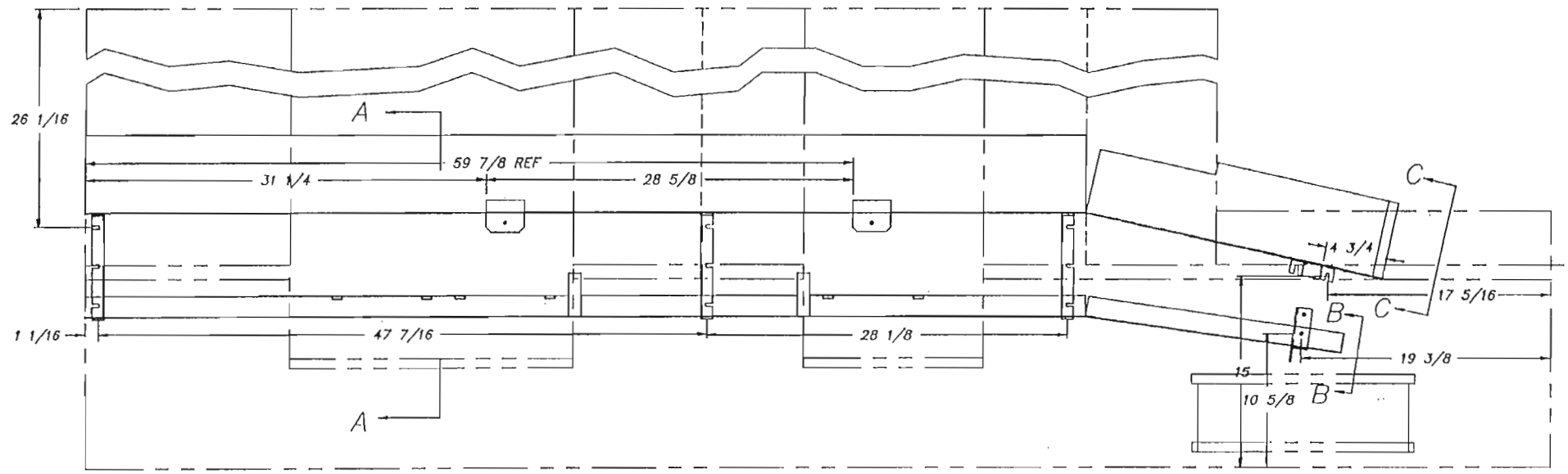

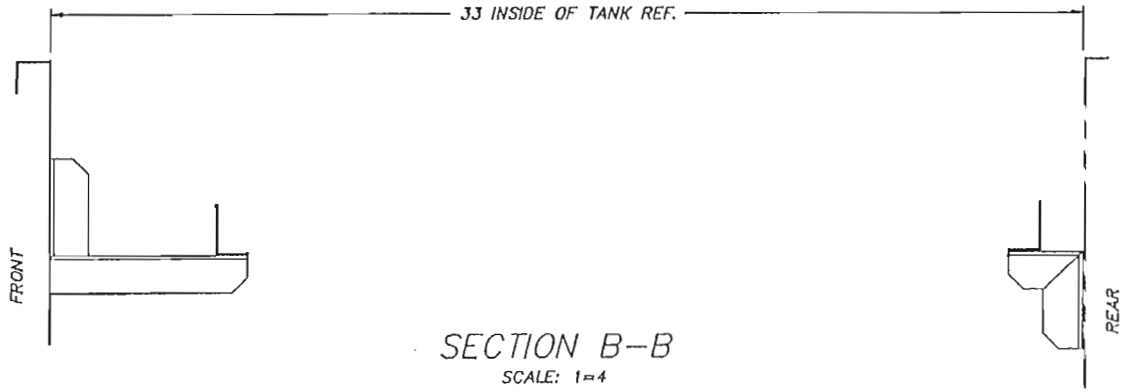

SECTION B–B
SCALE: 1=4

R.H. MACHINE SHOWN

SHEET 1 OF 3

REV	ECN NO	DATE

FILE: PARTS\1462–4

TOLERANCES
FRACTIONS ±1/64
DECIMALS
.XXX ± .005
.XX ± .01
ANGLES ±1/2°
UNLESS OTHERWISE SPECIFIED

TITLE	TRACK INSTALLATION LOAD SECTION	NEXT ASSY	DWG. NO. 1462–4
		REQ'D 1	
MAT'L	NOTED	SCALE 1=8	USED ON DEFENDER
Insinger Machine Company	Philadelphia, PA 19135 (215) 624–4800 FAX (215) 624–6966	DRWN/DATE PG 2.21.97	

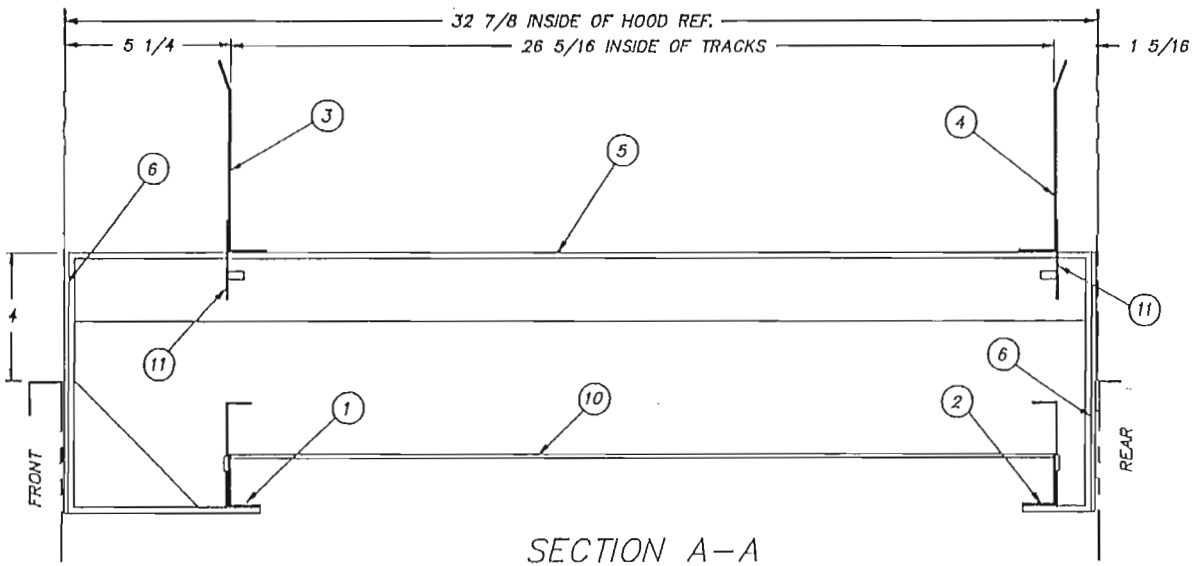

SECTION A–A

SCALE: 1=4

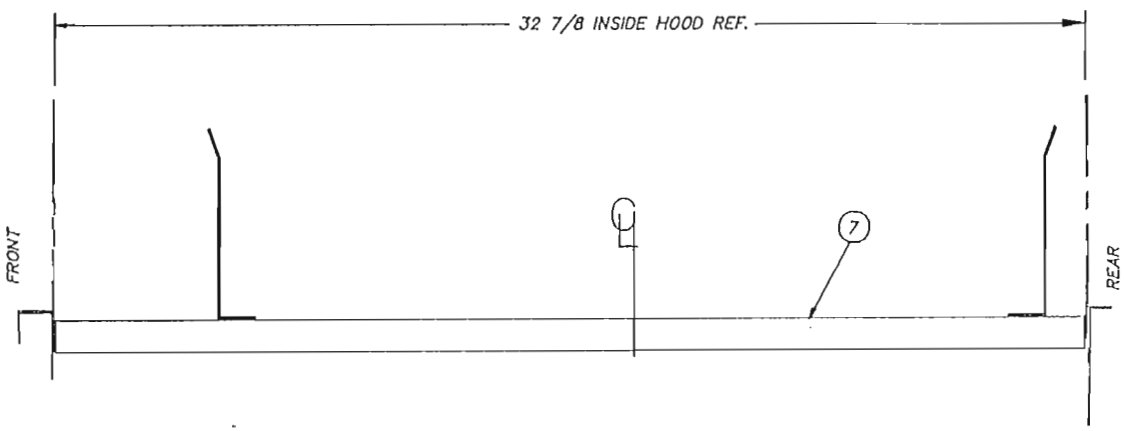

SECTION C–C

SCALE: 1=4

ITEM	PART NO.	SIZE	DESCRIPTION	QTY.
1	1462–39	B	TRACK LOWER – FRONT	1
2	1462–39	B	TRACK LOWER – REAR	1
3	1462–36	B	TRACK UPPER – FRONT	1
4	1462-36	B	TRACK UPPER – REAR	1
5	1100-50	B	TRACK SUPPORT	3
6	1100–50A	A	SHIM	6
7	1100–55	B	TRACK SUPPORT UPPER	1
8	1100–152	A	TRACK SUPPORT LOWER – REAR	1
9	1462–6	A	TRACK SUPPORT LOWER – FRONT	1
10	1100–58	A	SUPPORT BAR INSTALLATION	6
11	1390–70	A	CRADLE SUPPORT	4

R.H. MACH. SHOWN L.H. MACH. OPPOSITE

SHEET 2 OF

REV	ECN NO	DATE

FILE: PARTS\1462-4

TOLERANCES
FRACTIONS ±1/64
DECIMALS
.XXX ± .005
.XX ± .01
ANGLES ±1/2°
UNLESS OTHERWISE SPECIFIED

TITLE: TRACK INSTALLATION LOAD SECTION

NEXT ASSY

REQ'D 1

DWG. NO. 1462–4

MAT'L NOTED

SCALE 1=8

USED ON DEFENDER

Insinger Machine Company
Philadelphia, PA 19135
(215) 624–4800
FAX (215) 624–6966

DRWN/DATE PG 7.3.96

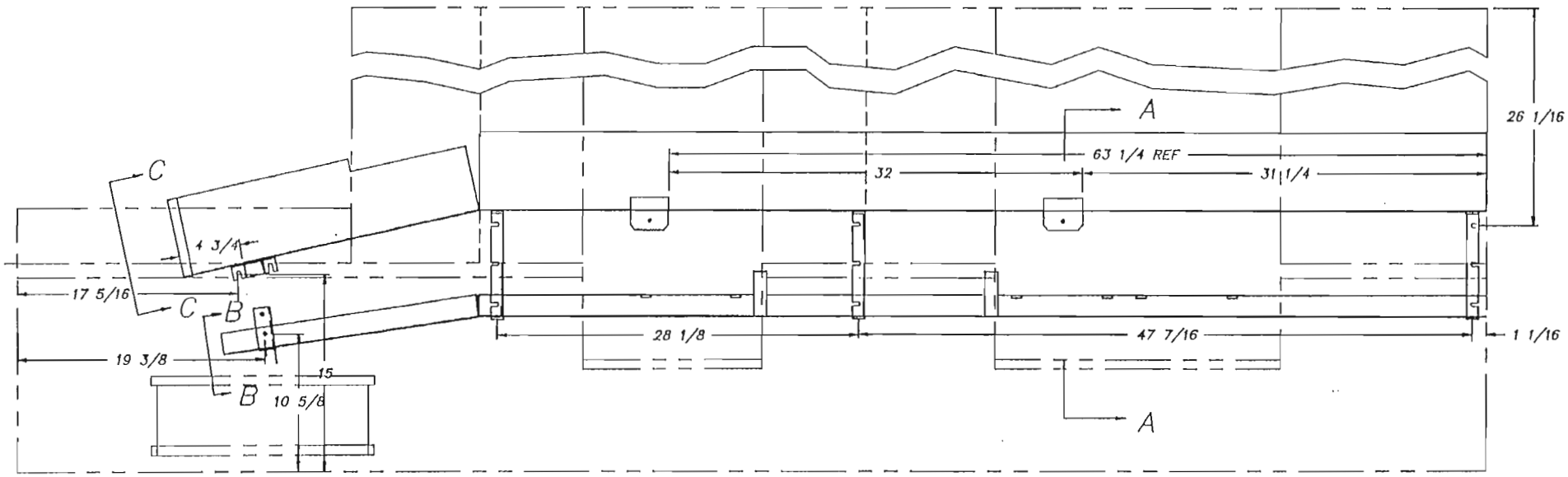

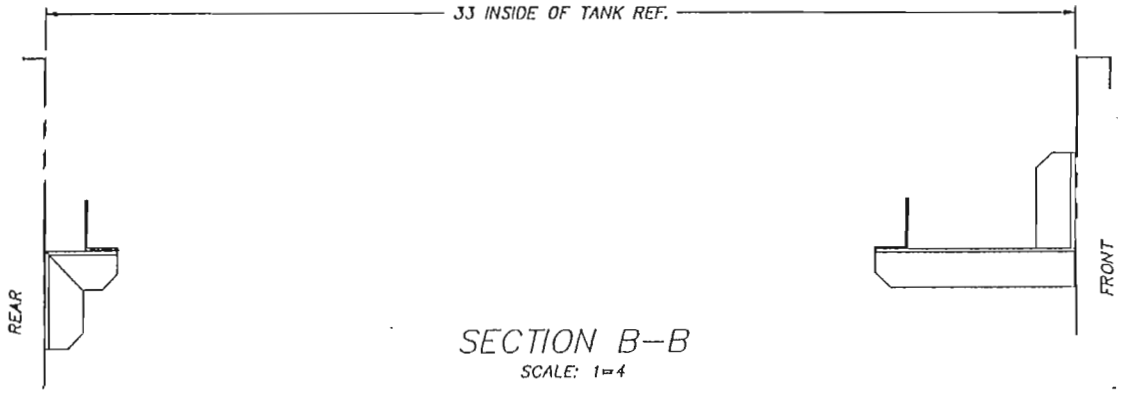

SECTION B–B
SCALE: 1=4

L.H. MACHINE SHOWN

SHEET 3 OF 3

			TOLERANCES	TITLE TRACK INSTALLATION LOAD SECTION	NEXT ASSY	DWG. NO.
			FRACTIONS ±1/64 DECIMALS .XXX ± .005 .XX ± .01 ANGLES ±1/2° UNLESS OTHERWISE SPECIFIED		REQ'D 1	1462–4
				MAT'L NOTED	SCALE 1=8	USED ON DEFENDER
REV	ECN NO	DATE		Insinger Machine Company	Philadelphia, PA 19135 (215) 624–4800 FAX (215) 624–6966	DRWN/DATE PG 2.21.97
FILE: PARTS\1462–4						

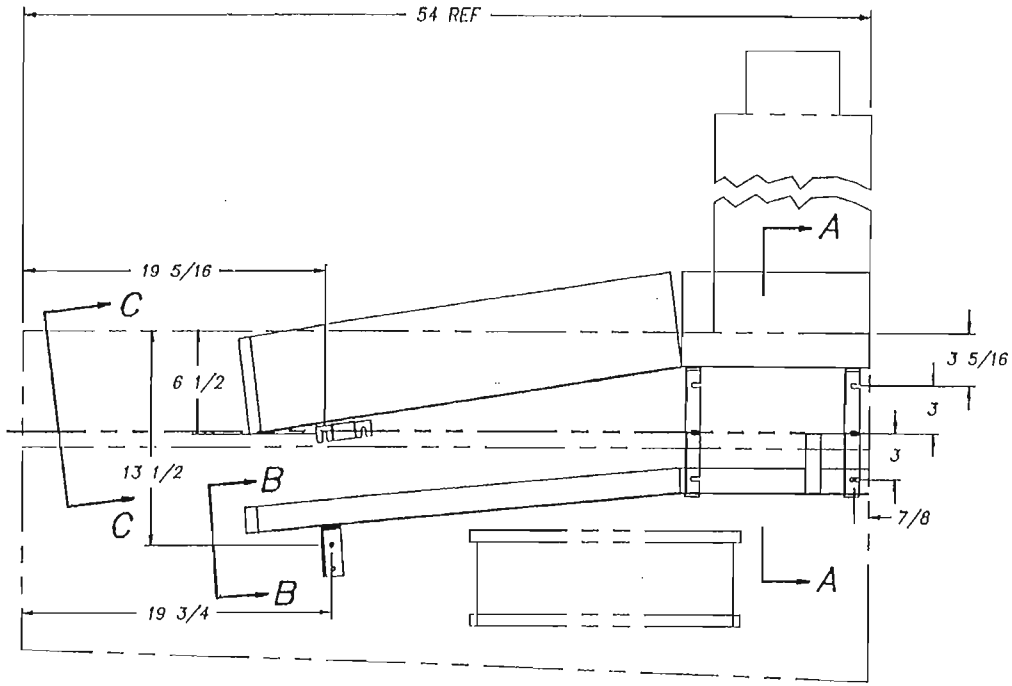

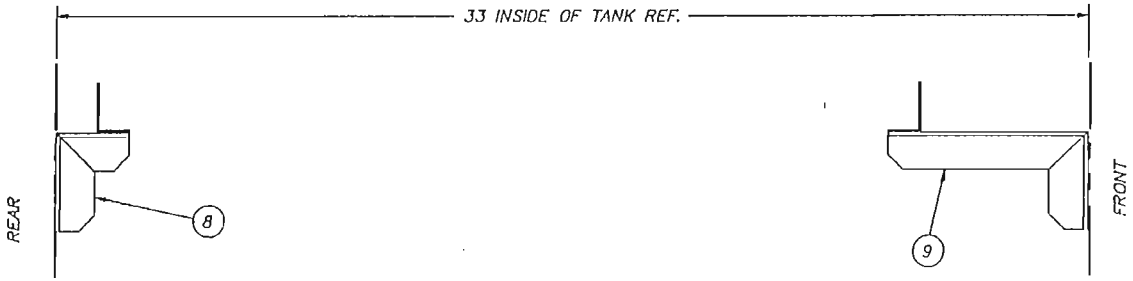

SECTION B–B

SCALE: 1=4

R.H. SHOWN L.H. OPPOSITE

SHEET 1 OF 2

REV	ECN NO	DATE

FILE: PARTS\1462–74

TOLERANCES
FRACTIONS ±1/64
DECIMALS
.XXX ± .005
.XX ± .01
ANGLES ±1/2°
UNLESS OTHERWISE SPECIFIED

TITLE: TRACK INSTALLATION 4'–6" UNLOAD SECTION

MAT'L: NOTED

NEXT ASSY

REQ'D: 1

SCALE: 1=8

DWG. NO.: 1462–74

USED ON: DEFENDER

DRWN/DATE: CES 12.20.98

Insinger Machine Company
Philadelphia, PA 19135
(215) 624–4800
FAX (215) 624–6866

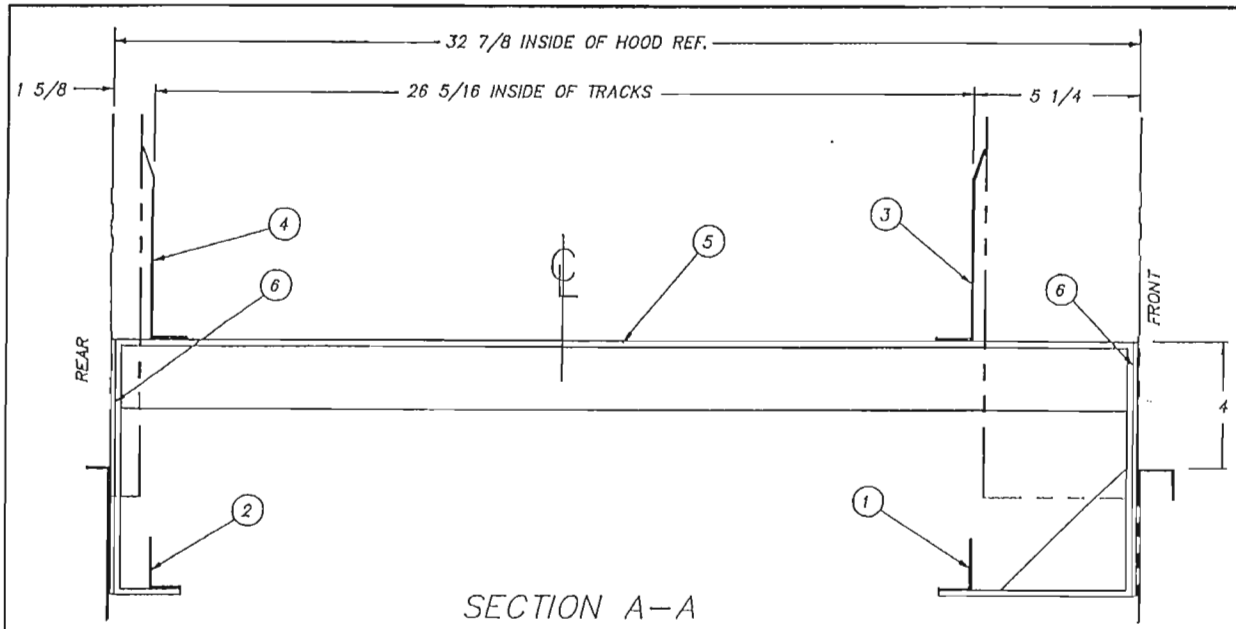

SECTION A–A

SCALE: 1=4

ITEM	PART NO.	SIZE	DESCRIPTION	QTY.
1	1462–76	B	TRACK LOWER – FRONT	1
2	1462–76	B	TRACK LOWER – REAR	1
3	1462–75	B	TRACK UPPER – FRONT	1
4	1462–75	B	TRACK UPPER – REAR	1
5	1100–50	B	TRACK SUPPORT	2
6	1100–50A	A	SHIM	4
7	1100–55	B	TRACK SUPPORT UPPER	1
8	1100–152	A	TRACK SUPPORT LOWER REAR	1
9	1100–56	A	TRACK SUPPORT LOWER FRONT	1

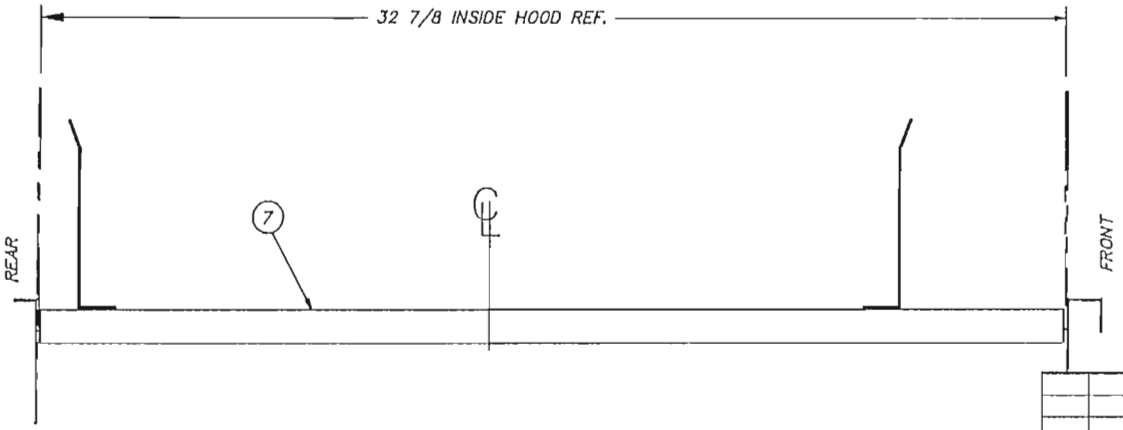

SECTION C–C

SCALE: 1=4

R.H. SHOWN L.H. OPPOSITE

SHEET 2 OF 2

REV	ECN NO	DATE

FILE: PARTS\1462–74

TOLERANCES
FRACTIONS ±1/64
DECIMALS
.XXX ± .005
.XX ± .01
ANGLES ±1/2°
UNLESS OTHERWISE SPECIFIED

TITLE: TRACK INSTALLATION 4'–6" UNLOAD SECTION

NEXT ASSY: REQ'D 1

DWG. NO. 1462–74

MATL: NOTED

SCALE 1=8

USED ON DEFENDER

Insinger Machine Company
Philadelphia, PA 19133
(215) 624–4800
FAX (215) 624–6866

DRWN/DATE CES 12.20.96

ITEM	PART NO.	SIZE	DESCRIPTION	QTY.
8	1462-48	B	SCRAP SCREEN	1
9	1462-49	A	SUPPORT RAIL	1
10	D309C-GP-6G	–	WELDSTUD 1/4 X 3/4 LG.	6
11	1462-33	B	RINSE PAN	1
12	1462-79	A	BAFFLE-RINSE PAN	1

ITEM	PART NO.	SIZE	DESCRIPTION	QTY.
1	1462-43	A	BAFFLE	1
2	1462-44	A	BAFFLE	1
3	1462-45	A	BAFFLE	1
4	1462-46	A	BAFFLE	1
5	1100-61	A	SCRAP SCREEN	4
6	1100-37	A	SCRAP SCREEN	1
7	1462-47	B	SCRAP SCREEN	1

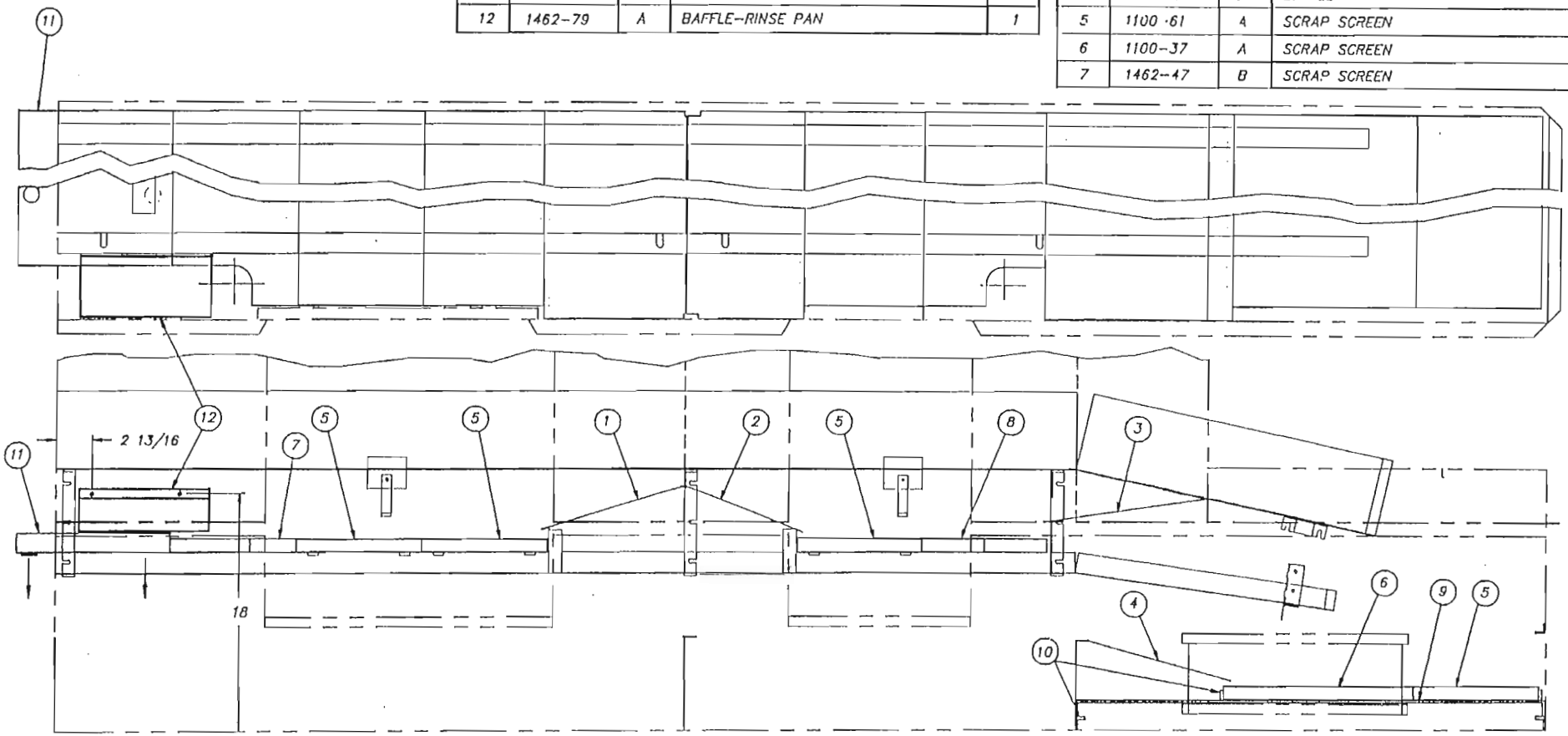

R.H. MACH. ONLY

SHEET 1 OF 2

REV	ECN NO	DATE

FILE: PARTS/1462-7

TOLERANCES
FRACTIONS ±1/64
DECIMALS
.XXX ± .005
.XX ± .01
ANGLES ±1/2°
UNLESS OTHERWISE SPECIFIED

TITLE: BAFFLES & SCRAP SCREEN LOAD SECTION

MAT'L: NOTED

NEXT ASSY

REQ'D: 1

SCALE: 1=8

DWG. NO.: 1462-7

USED ON: DEFENDER

DRWN/DATE: PG 7.8.96

Insinger Machine Company
Philadelphia, PA 19135
(215) 624-4800
FAX (215) 624-6966

ITEM	PART NO.	SIZE	DESCRIPTION	QTY.
8	1462-49	A	SUPPORT RAIL	1
9	0309C-GP-6C	–	WELDSTUD 1/4 X 3/4 LG.	6
10	1462-33	B	RINSE PAN	1
11	1462-79	A	BAFFLE-RINSE PAN	1

ITEM	PART NO.	SIZE	DESCRIPTION	QTY.
1	1462-43	A	BAFFLE	1
2	1462-50	A	BAFFLE	1
3	1462-45	A	BAFFLE	1
4	1462-46	A	BAFFLE	1
5	1100-61	A	SCRAP SCREEN	5
6	1100-37	A	SCRAP SCREEN	1
7	1462-47	B	SCRAP SCREEN	1

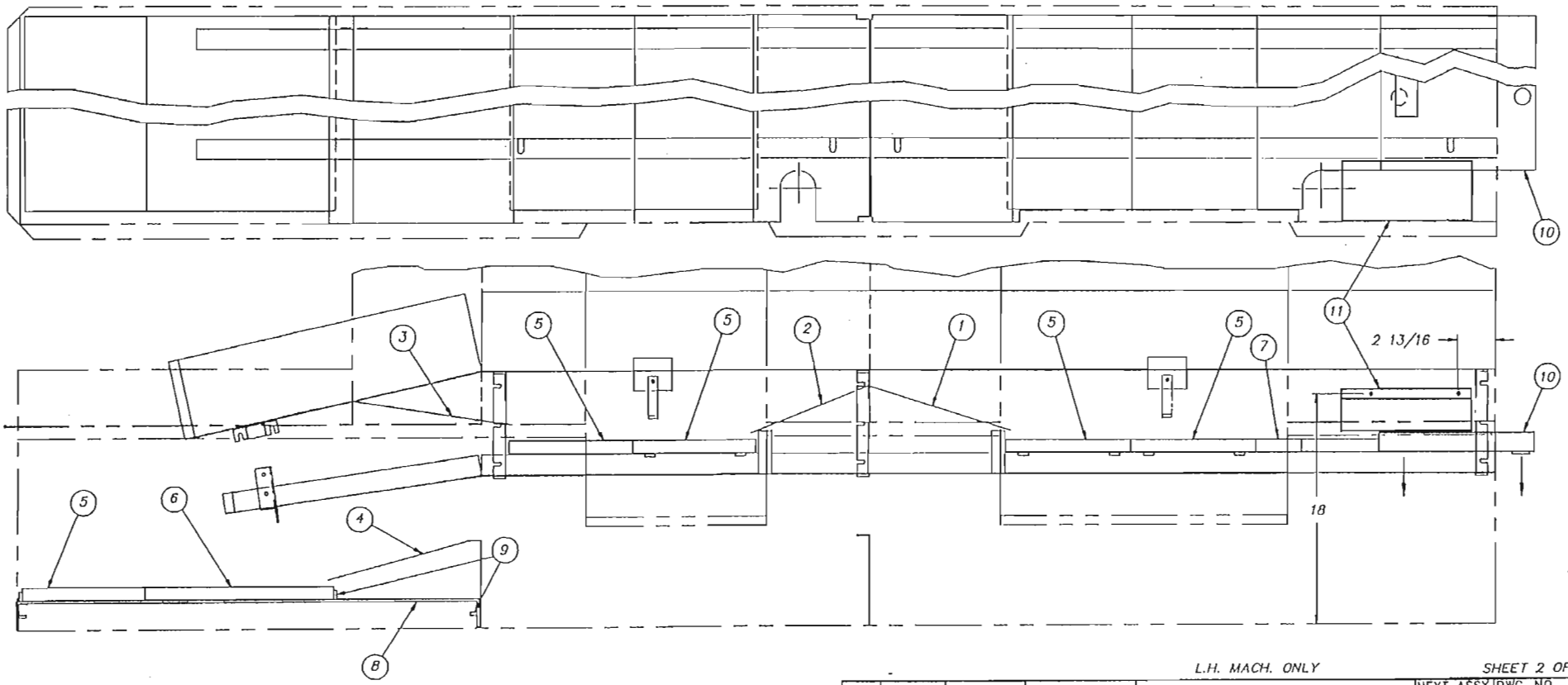

L.H. MACH. ONLY

SHEET 2 OF 2

REV	ECN NO	DATE

FILE: PARTS/1462-7

TOLERANCES
FRACTIONS ±1/64
DECIMALS
.XXX ± .005
.XX ± .01
ANGLES ±1/2°
UNLESS OTHERWISE SPECIFIED

TITLE: BAFFLES & SCRAP SCREEN LOAD SECTION

NEXT ASSY: REQ'D 1

DWG. NO.: 1462-7

MAT'L: NOTED

SCALE: 1=8

USED ON: DEFENDER

Insinger Machine Company
Philadelphia, PA 19135
(215) 624-4800
FAX (215) 624-6968

DRWN/DATE: PG 7.8.96

ITEM	PART NO.	SIZE	DESCRIPTION	QTY.
1	1390-53-1	A	TOP BAFFLE	1
2	1390-54	A	TOP BAFFLE	2
3	1390-52	A	SIDE BAFFLE	1
4	D-761B	A	CURTAIN ROD CLIP	8
5	D2-522-1	A	SPLASH GUARD CURTAIN (16") CENTER	2
6	D2-522-2	A	SPLASH GUARD CURTAIN (12") CENTER	1
7	D2-522-3	A	SPLASH GUARD CURTAIN (18 1/2) ENTER	1

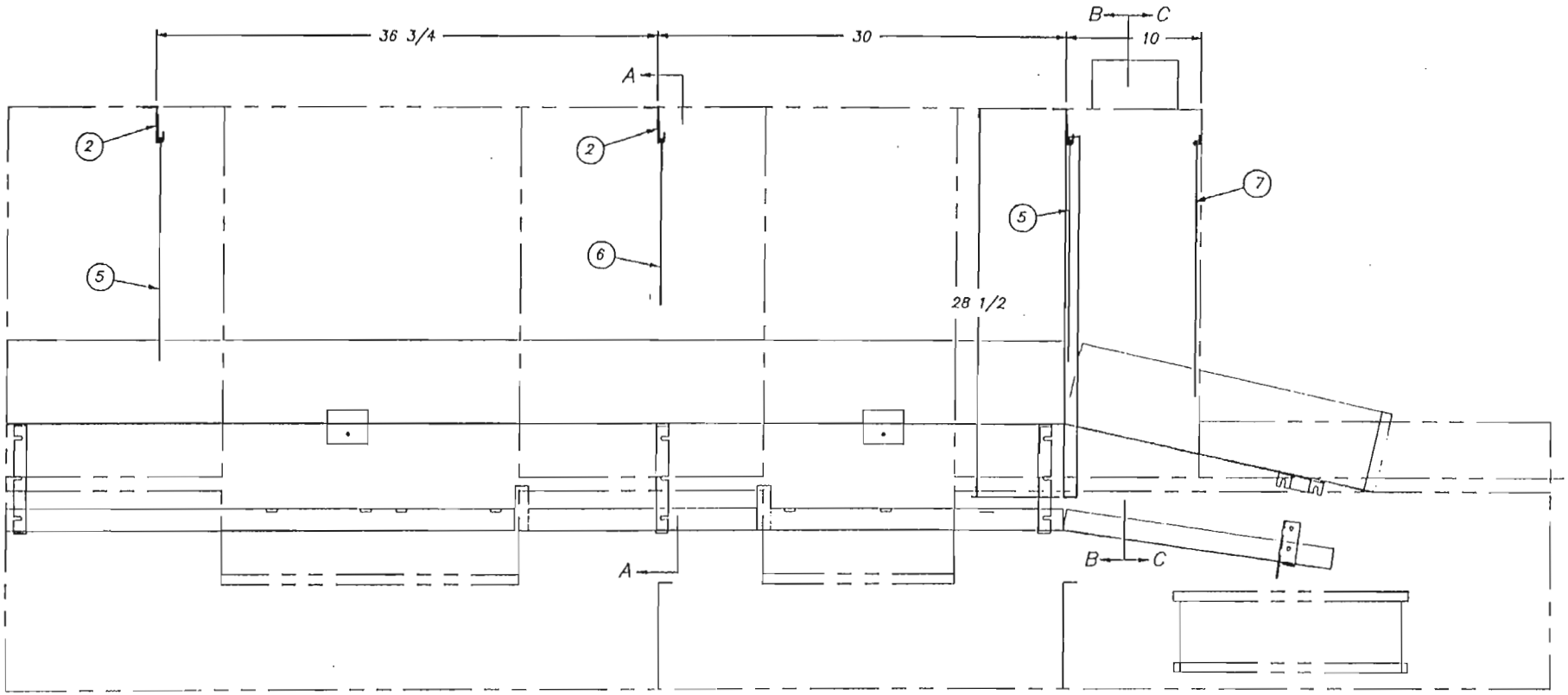

R.H. MACH. SHOWN L.H. MACH. OPPOSITE

SHEET 1 OF 2

NOTE:
1. SEE DWG. D-761D & 1100-322 FOR PRISON PACKAGE.

REV	ECN NO	DATE

FILE: PARTS/1462-9

TOLERANCES
FRACTIONS ±1/64
DECIMALS
.XXX ± .005
.XX ± .01
ANGLES ±1/2°
UNLESS OTHERWISE SPECIFIED

TITLE: CURTAIN & BAFFLE INSTALL. LOAD SECTION

NEXT ASSY: REQ'D 1

DWG. NO.: 1462-9

MAT'L: NOTED

SCALE: 1=8

USED ON: DEFENDER

Insinger Machine Company
Philadelphia, PA 19135
(215) 624-4800
FAX (215) 624-6966

DRWN/DATE: PG 2.24.97

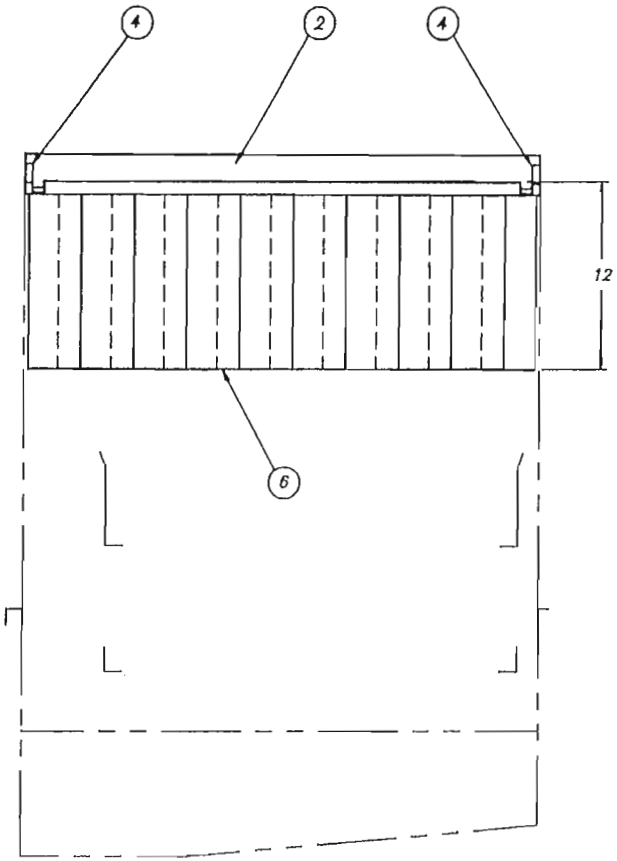

SECTION A–A

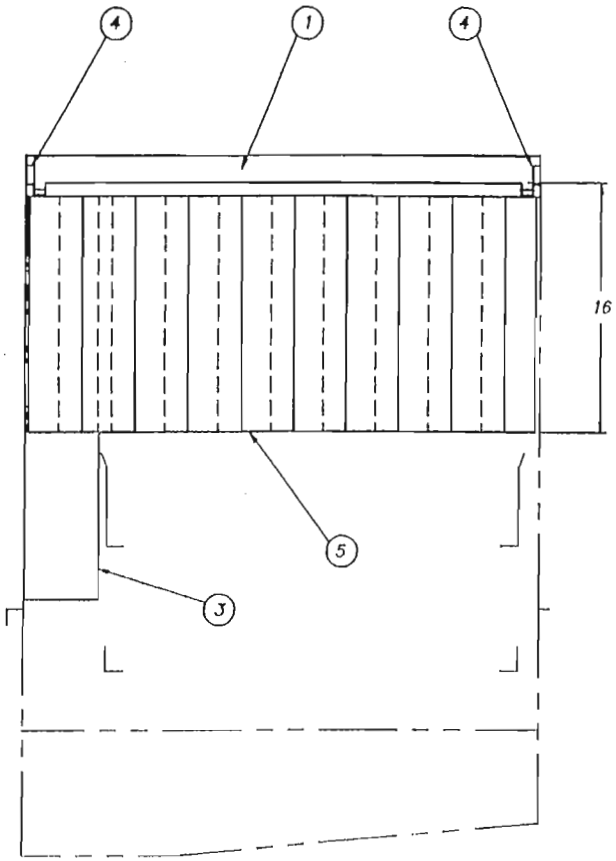

SECTION B–B

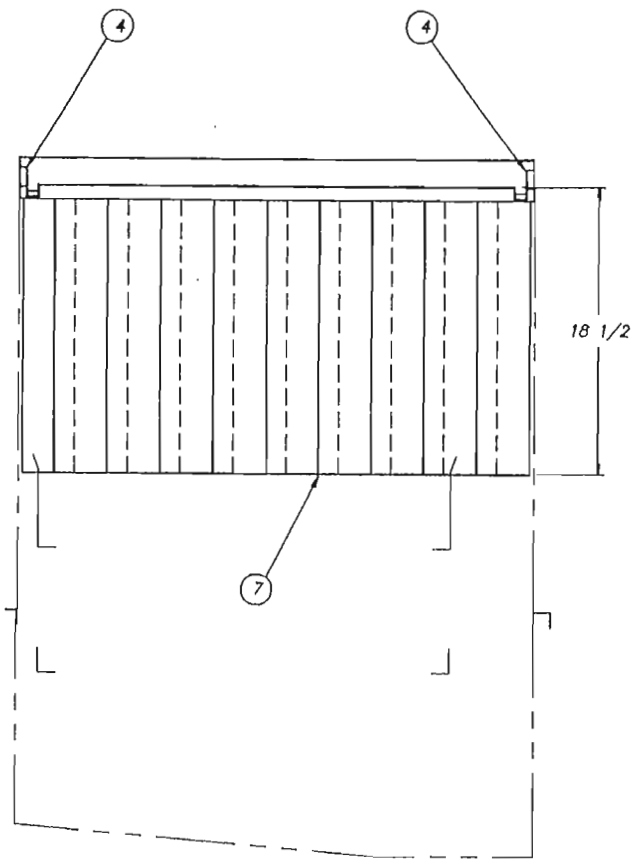

SECTION C–C

R.H. MACH. SHOWN L.H. MACH. OPPOSITE

SHEET 2 OF 2

NOTE:
1. SEE DWG. D–761D & 1100–322 FOR PRISON PACKAGE.

REV	ECN NO	DATE

FILE: PARTS/1462–9

TOLERANCES
FRACTIONS ±1/64
DECIMALS
.XXX ± .005
.XX ± .01
ANGLES ±1/2°
UNLESS OTHERWISE SPECIFIED

TITLE CURTAIN & BAFFLE INSTALL. LOAD SECTION		NEXT ASSY REQ'D 1	DWG. NO. 1462–9
MAT'L NOTED		SCALE 1=8	USED ON DEFENDER
Insinger Machine Company	Philadelphia, PA 19135 (215) 624–4800 FAX (215) 624–6988		DRWN/DATE PG 2.24.97

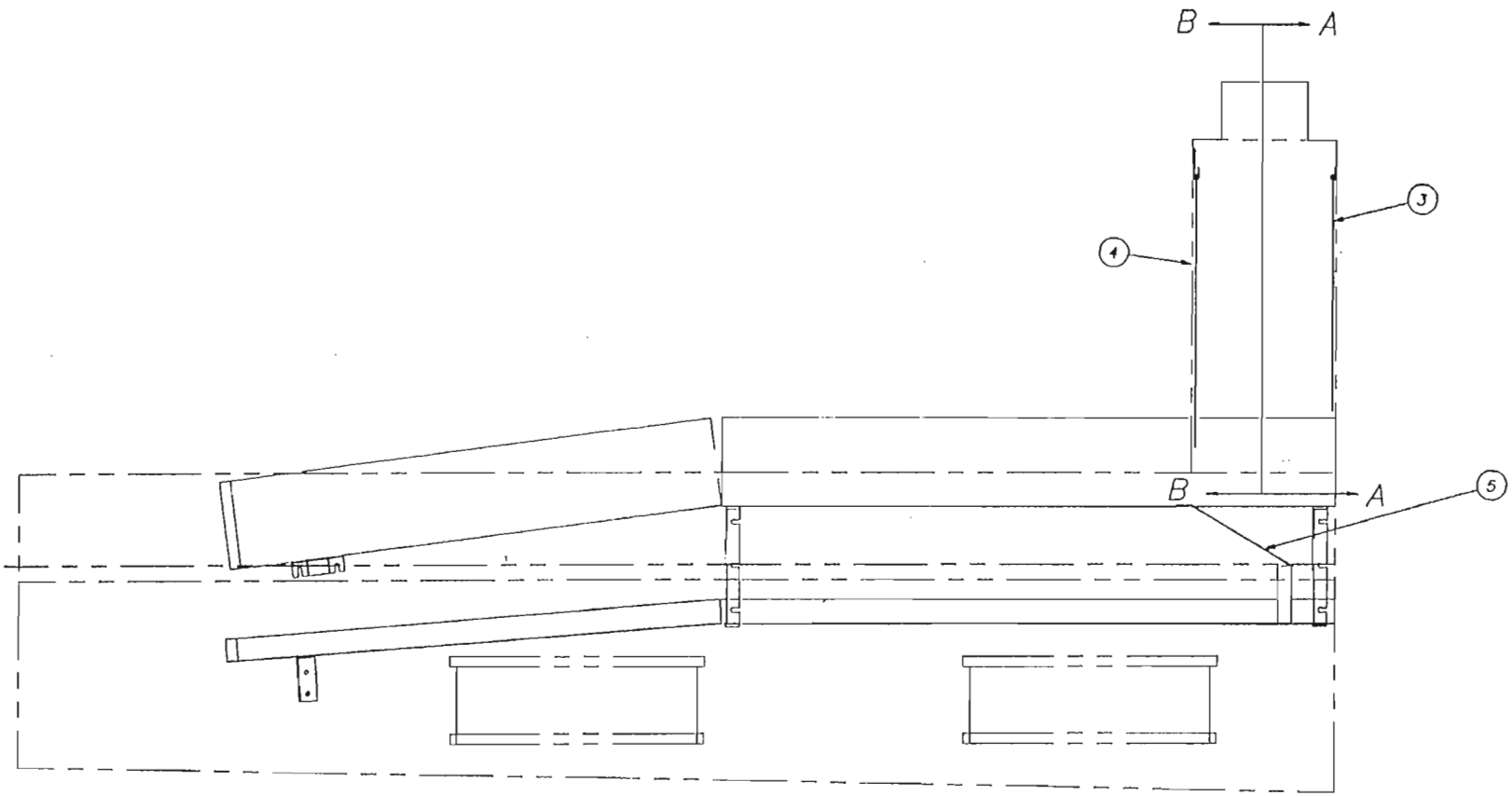

R.H. SHOWN L.H. OPPOSITE

SHEET 1 OF 2

			TOLERANCES	TITLE CURTAIN INSTALLATION UNLOAD SECTION	NEXT ASSY	DWG. NO.
			FRACTIONS ±1/64 DECIMALS .XXX ± .005 .XX ± .01 ANGLES ±1/2° UNLESS OTHERWISE SPECIFIED		REQ'D 1	1462-10
				MATL NOTED	SCALE 1=8	USED ON DEFENDER
REV	ECN NO	DATE		Insinger Machine Company, Philadelphia, PA 19135, (215) 824-4800, FAX (215) 824-8966		DRWN/DATE PG 2.25.97
FILE: PARTS/1462-10						

ITEM	PART NO.	SIZE	DESCRIPTION	QTY.
1	1390-53-2	A	TOP BAFFLE	1
2	D-761B	A	CURTAIN ROD CLIP	4
3	D2-522-1	A	SPLASH GUARD CURTAIN (16") CENTER	1
4	D3-526	A	SPLASH GUARD CURTAIN (18 1/2")	1
5	1462-8	A	BAFFLE, UNLOAD SECTION	1

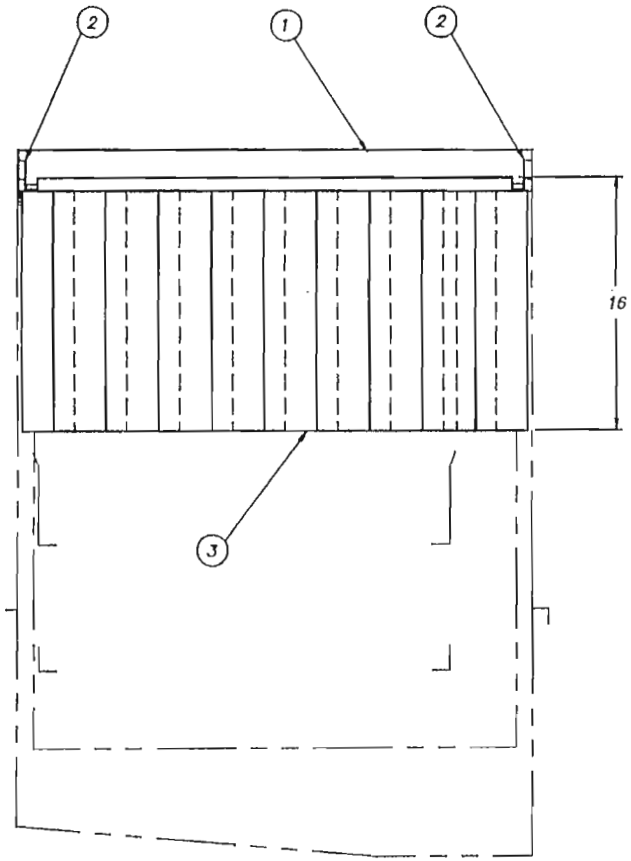

SECTION A-A

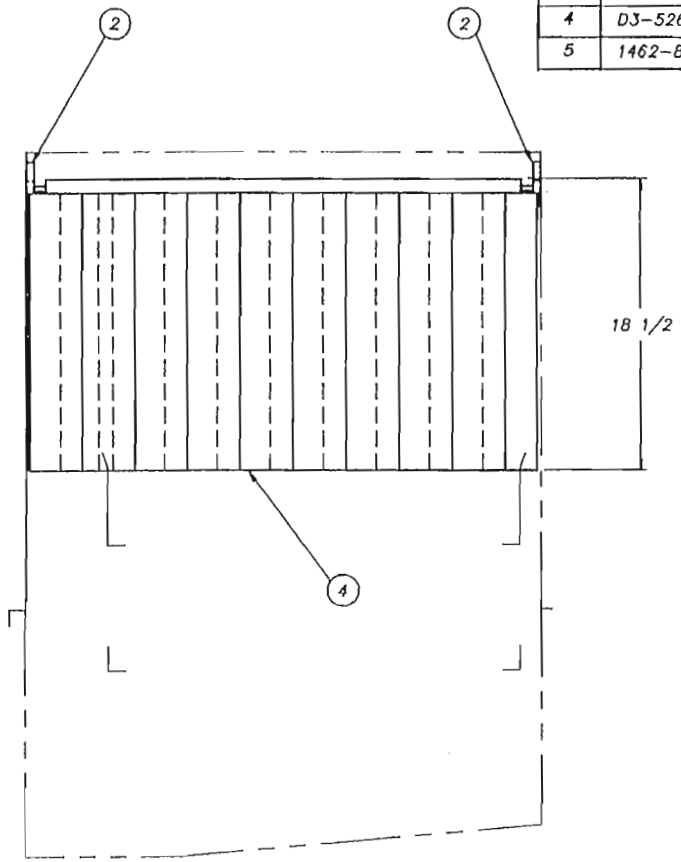

SECTION B-B

NOTE:
1. SEE DWG. D-761D & 1100-322 FOR PRISON PACKAGE.

R.H. MACH. SHOWN L.H. MACH. OPPOSITE

SHEET 2 OF 2

REV	ECN NO	DATE

FILE: PARTS/1462-10

TOLERANCES
FRACTIONS ±1/64
DECIMALS
.XXX ± .005
.XX ± .01
ANGLES ±1/2°
UNLESS OTHERWISE SPECIFIED

TITLE	CURTAIN INSTALLATION UNLOAD SECTION	NEXT ASSY REQ'D 1	DWG. NO. 1462-10
MAT'L	AS NOTED	SCALE 1=8	USED ON DEFENDER
Insinger Machine Company	Philadelphia, PA 19135 (215) 624-4800 FAX (215) 624-8968		DRWN/DATE PG 2.25.97

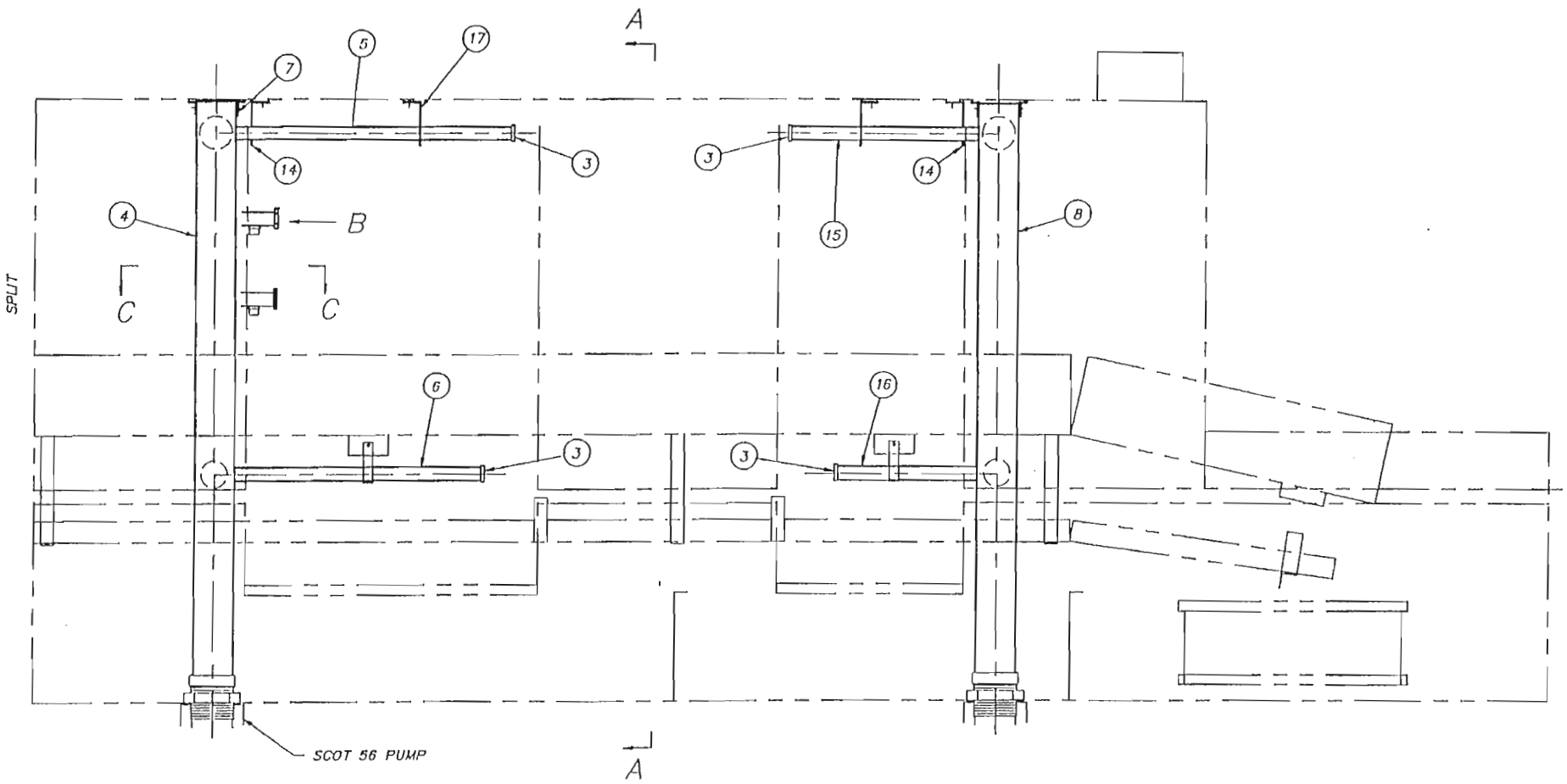

R.H. MACHINE SHOWN

SHEET 1 OF 3

			TOLERANCES	TITLE DISCHARGE LINE ASSY (LOAD) W/O SILVERWARE TROUGH	NEXT ASSY / REQ'D 1	DWG. NO. 1462-82
			FRACTIONS ±1/64 DECIMALS .XXX ± .005 .XX ± .01 ANGLES ±1/2° UNLESS OTHERWISE SPECIFIED	MAT'L NOTED	SCALE 1=8	USED ON DEFENDER
REV	ECN NO	DATE		Insinger Machine Company, Philadelphia, PA 19135, (215) 624-4800, FAX (215) 624-6986		DRWN/DATE CES 1.9.97
FILE: PARTS\1462-82						

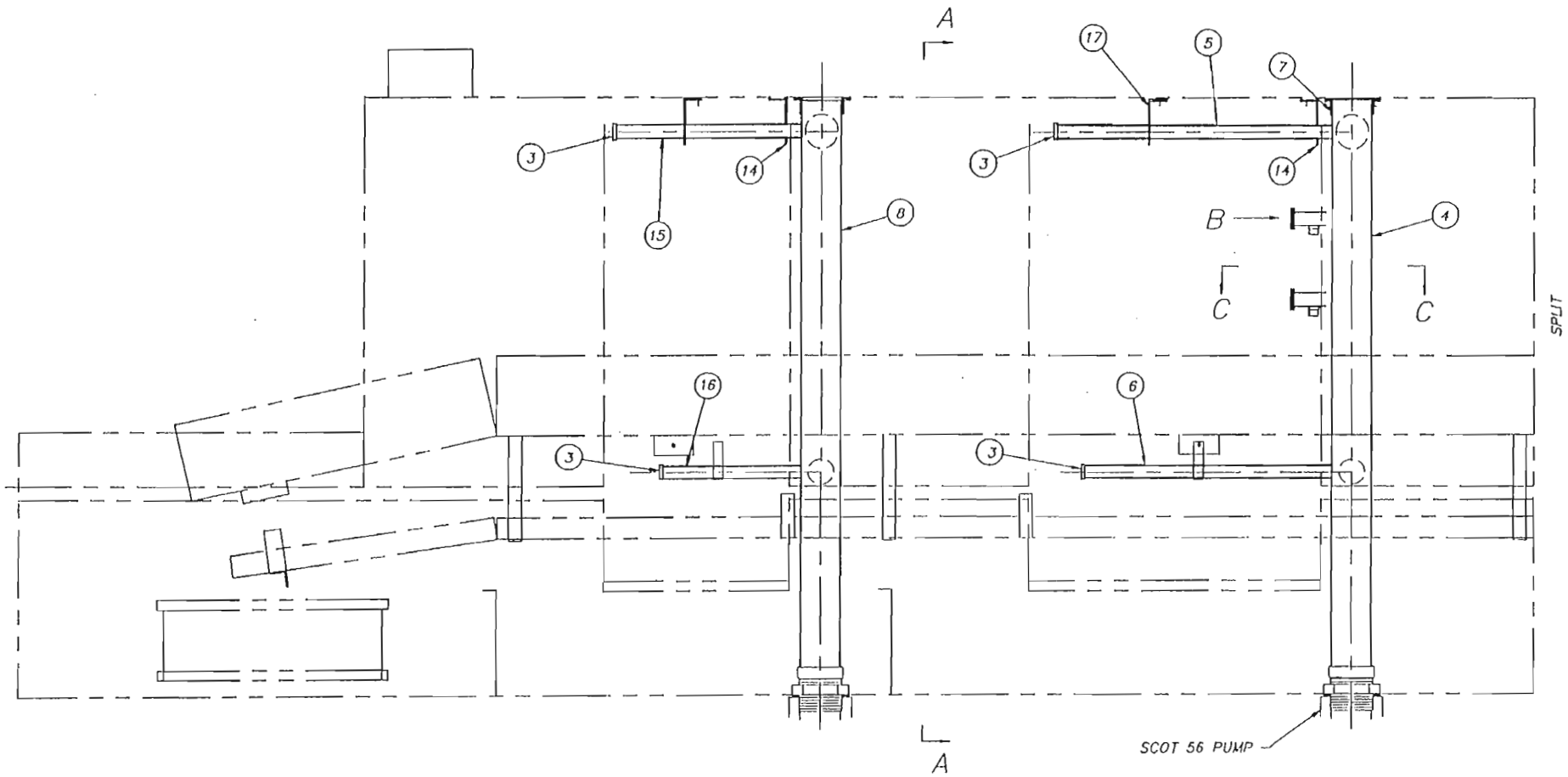

L.H. MACHINE SHOWN

SHEET 2 OF 3

REV	ECN NO	DATE

FILE: PARTS\1462-82

TOLERANCES
FRACTIONS ±1/64
DECIMALS
.XXX ± .005
.XX ± .01
ANGLES ±1/2°
UNLESS OTHERWISE SPECIFIED

TITLE DISCHARGE LINE ASSY (LOAD) W/O SILVERWARE TROUGH

MAT'L NOTED

NEXT ASSY

REQ'D 1

SCALE 1=8

DWG. NO. 1462-82

USED ON DEFENDER

DRWN/DATE CES 1.9.97

Insinger Machine Company
Philadelphia, PA 19135
(215) 624-4800
FAX (215) 624-6966

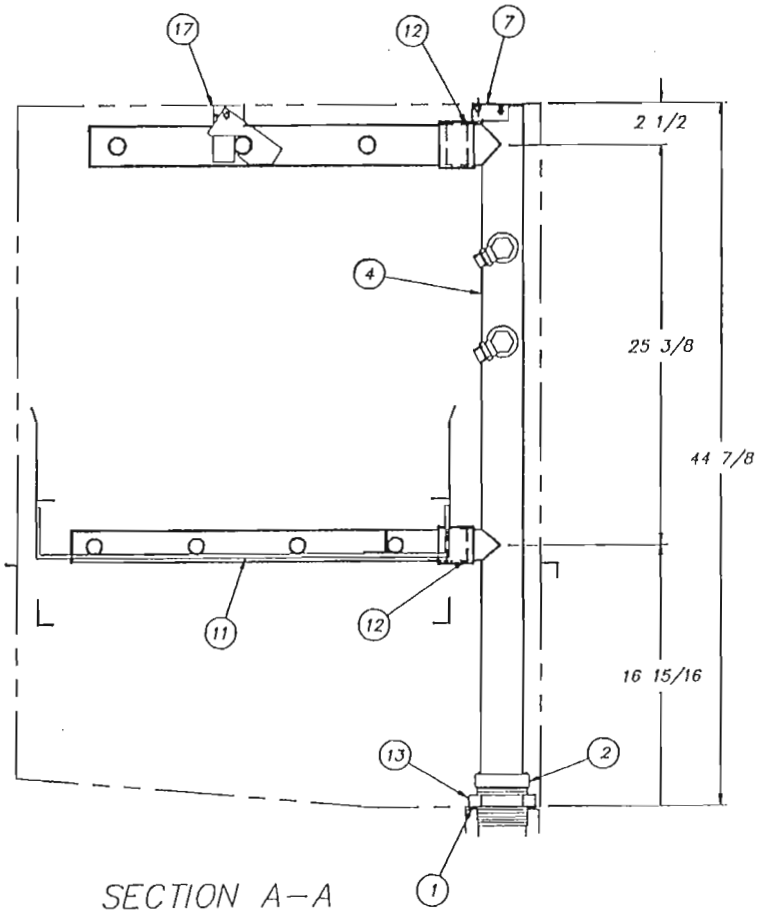

SECTION A–A

L.H. WASH TANK SHOWN

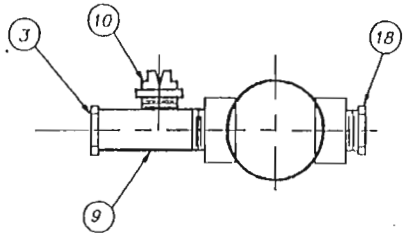

SECTION C–C

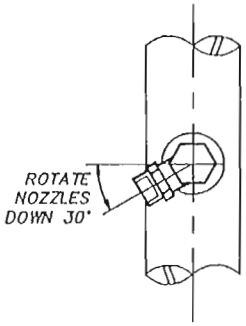

VIEW B

ITEM	PART NO.	DESCRIPTION	QTY.
1	1104–67	GASKET, PUMP DISCHARGE	1
2	1104–65	NIPPLE, DISCHARGE LINE	1
3	D2–554–3	PLUG 7/8–9 UNC–2A	16
4	1462–81	DISCHARGE TUBE–WASH (3" OD)	1
5	1462–34	MANIFOLD ASSY–UPPER WASH	1
6	1462–35	MANIFOLD ASSY–LOWER WASH	1
7	1169–96	SUPPORT INSTALLATION	2
8	1462–80	DISCHARGE TUBE–PW (3" OD)	1
9	1162–94	EXTENSION MANIFOLD	2
10	D2272	SPRAY NOZZLE #80–200	2
11	1390–59	CRADLE–SPRAY PIPE	2
12	D2–564	"O" RING (01–032)	2
13	D326F–L1	LOCKNUT	2
14	SK–3733	STOP BRACKET	2
15	1462–56	MANIFOLD ASSY–UPPER PWASH	1
16	1462–57	MANIFOLD ASSY–LOWER PWASH	1
17	D–2349	LATCH ASSEMBLY–SPRAY PIPE	2
18	D328F–E2–C	HEX PLUG 3/4 IPS	2

SHEET 3 OF 3

REV	ECN NO	DATE

FILE: PARTS\1462–82

TOLERANCES
FRACTIONS ±1/64
DECIMALS
.XXX ± .005
.XX ± .01
ANGLES ±1/2°
UNLESS OTHERWISE SPECIFIED

TITLE DISCHARGE LINE ASSY (LOAD) W/O SILVERWARE TROUGH

NEXT ASSY
REQ'D 1

DWG. NO. 1462–82

MAT'L NOTED

SCALE 1=8

USED ON DEFENDER

Insinger Machine Company
Philadelphia, PA 19135
(215) 624–4800
FAX (215) 624–6988

DRWN/DATE CES 1.9.97

Insinger
Machine Company

PART 5

REPLACEMENT PARTS

FOR DEFENDER SERIES

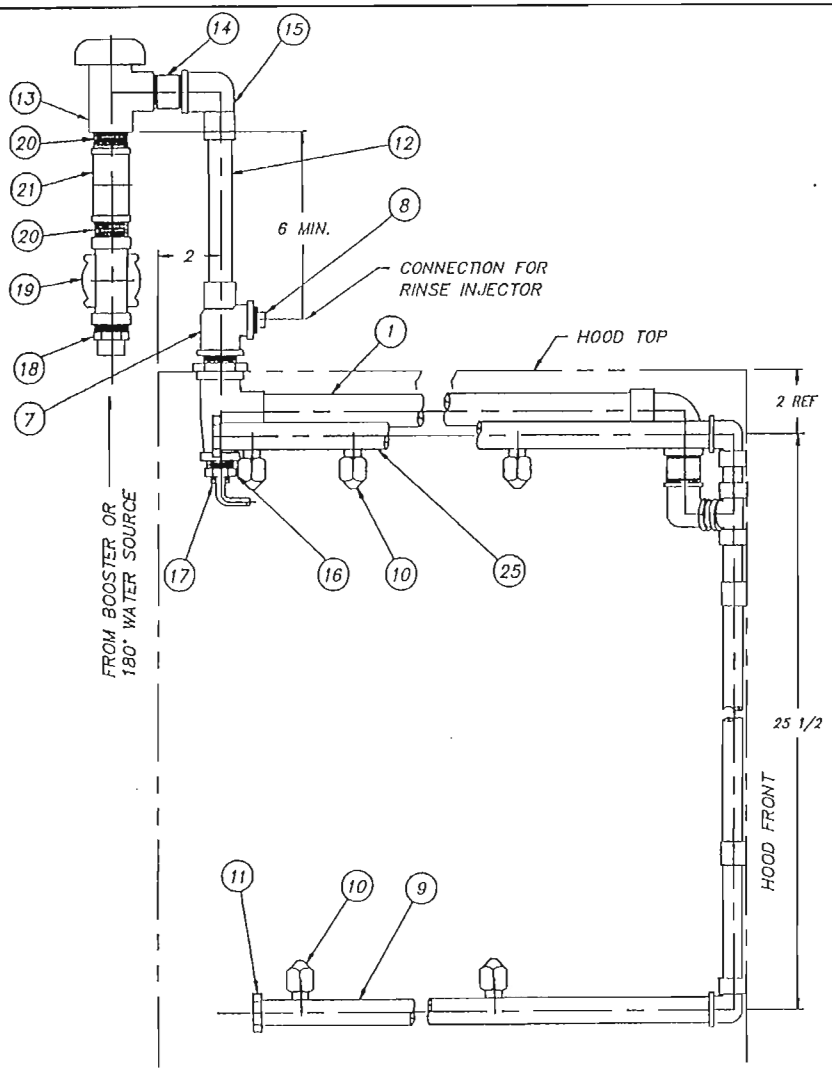

VIEW FROM RINSE END

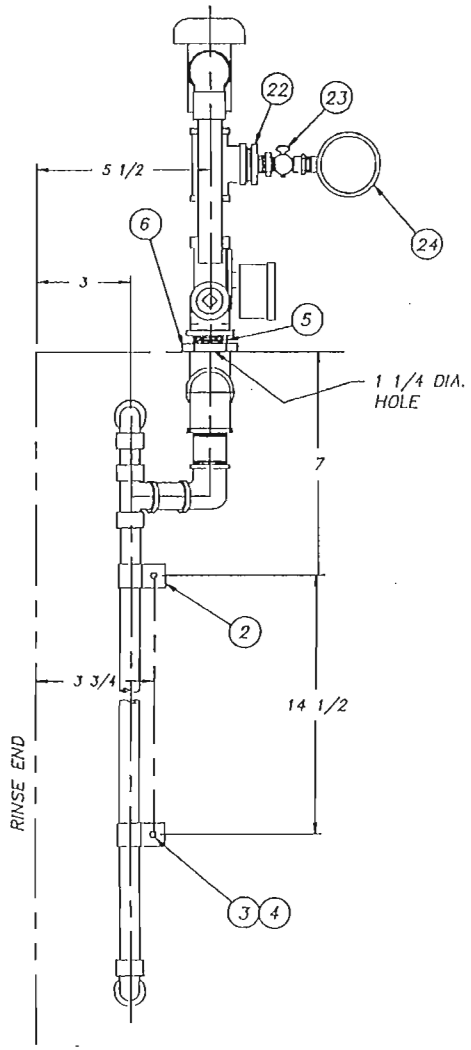

R.H. SHOWN L.H. OPPOSITE

ITEM	PART NO.	SIZE	DESCRIPTION	QTY.
1	1100-319D	B	FINAL RINSE INSIDE PIPING	1
2	975-100	A	BRACKET	2
3	D309C-EF-3G	–	WELDSTUD 10-32 X 3/8	2
4	D312C-EF-5	–	LOCKNUT 10-32	2
5	D314F-EL-12	–	NIPPLE 3/4 IPS X 1 1/2 L.O.E.	1
6	D326F-E1	–	LOCKNUT 3/4 IPS	1
7	D320F-E1E301	–	TEE 3/4 IPS X 3/4C X 1/2 IPS	1
8	D328F-D2-A	–	PIPE PLUG 1/2 IPS	1
9	1462-94	B	SPRAY PIPE, LOWER	1
10	D-2836	–	SPRAY NOZZLE 1/4 IPS	9
11	D2-554-2	A	PLUG 3/4-10 UNC-2A	2
12	D207A-B6-22	–	COP. TUBE 3/4 CTS X 5 1/2	1
13	D-2243	–	VACUUM BREAKER 3/4 IPS	1
14	D314F-ES-16	–	NIPPLE 3/4 IPS X 2	1
15	D316F-E3-E1	–	90° ELL 3/4 C X 3/4 FIPS	1
• 16	D2390SP-1	–	BRASS UNION	1
• 17	D2390SP	–	SPLIT JAM NUT	1
18	D318A-E3-E2	–	COPPER UNION 3/4 C X 3/4 MPS	1
19	D-2597	–	SOLENOID (WATER) 3/4 IPS	1
20	D314F-EC-00	–	CLOSE NIPPLE 3/4 IPS	2
21	D320F-E1E1E1	–	TEE 3/4 IPS	1
22	D322F-E2-B1	–	HEX RED 3/4 MIPS X 1/4 FIPS	1
23	D-2497	–	PETCOCK 1/4 IPS	1
24	SK-1433	A	PRESSURE GAUGE 1/4 IPS	1
25	1100-329A	B	SPRAY PIPE, UPPER X 27 3/4	1

• DENOTES NICKEL PLATED

REV	ECN NO	DATE

FILE: PARTS\1462-59

TOLERANCES
FRACTIONS ±1/64
DECIMALS
.XXX ± .005
.XX ± .01
ANGLES ±1/2°
UNLESS OTHERWISE SPECIFIED

TITLE: FINAL RINSE ASSEMBLY

NEXT ASSY
REQ'D 1

DWG. NO. 1462-59

MAT'L: NOTED

SCALE 1=4

USED ON DEFENDER

Insinger Machine Company
Philadelphia, PA 19135
(215) 624-4800
FAX (215) 624-6966

DRWN/DATE CES 2.20.97

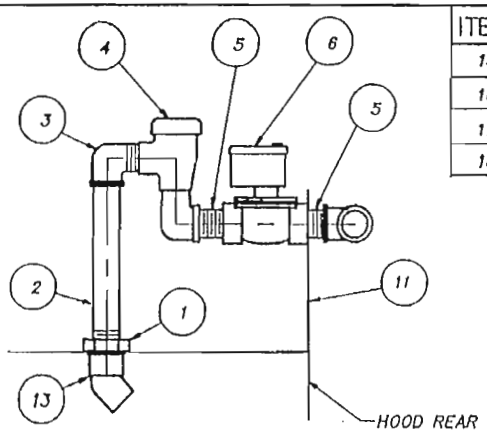

SECTION A–A
TYP 3 PLACES

ITEM	PART NO.	SIZE	DESCRIPTION	QTY.
15	D314F–EC–00	–	CLOSE NIPPLE 3/4 IPS	1
16	D–2482	–	"Y" STRAINER 3/4 IPS	1
17	D328F–D1	–	CAP 1/2 IPS	1
18	D207A–B4–99	–	COPPER TUBING 1/2 CTS X 24 3/4 LG.	1

ITEM	PART NO.	SIZE	DESCRIPTION	QTY.
1	D326F–D1	–	LOCKNUT 1/2 IPS	3
2	D314F–DL–52	–	NIPPLE 1/2 IPS X 6 1/2 L.O.E.	3
3	D316F–D1–D2	–	90 ° STREET ELL 1/2 IPS	6
4	D–2241	–	VACUUM BREAKER 1/2 IPS	3
5	D314F–DC–00	–	CLOSE NIPPLE 1/2 IPS	6
6	D–2606	–	SOLENOID VALVE 1/2 IPS 24V	3
7	D320F–E1E1D1	–	TEE 3/4FIPS X 3/4FIPS X 1/2FIPS	2
8	D317A–E3–E2	–	ADAPTER 3/4 C X 3/4 MIPS	2
9	–	–	–	–
10	D328F–E2–A	–	PIPE PLUG 3/4 IPS	1
11	957–80	A	BRACKET	3
12	D207A–B6–68	–	COPPER TUBING 3/4CTS X 17	1
13	D315A–D1–D1	–	45° 1/2 FIPS X 1/2 FIPS	2
14	D318A–E3–E	–	UNION 3/4C	1

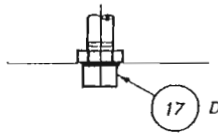

DRILL 3/16 HOLE
PREWASH ONLY

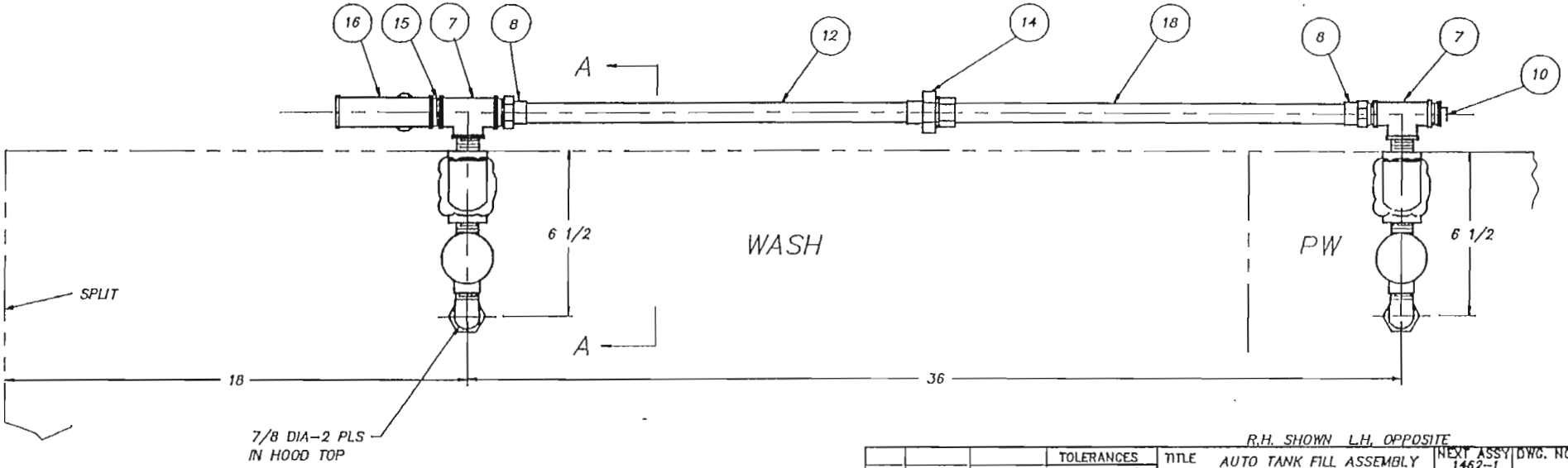

R.H. SHOWN L.H. OPPOSITE

REV	ECN NO	DATE

FILE: PARTS\1462–60

TOLERANCES
FRACTIONS ±1/64
DECIMALS
.XXX ± .005
.XX ± .01
ANGLES ±1/2°
UNLESS OTHERWISE SPECIFIED

TITLE: AUTO TANK FILL ASSEMBLY PREWASH & WASH

NEXT ASSY: 1462–1
REQ'D: 1
DWG. NO.: 1462–60
MAT'L: NOTED
SCALE: 1–4
USED ON: DEFENDER

Insinger Machine Company
Philadelphia, PA 19135
(215) 624–4800
FAX (215) 624–8986

DRWN/DATE: CES 8.8.96

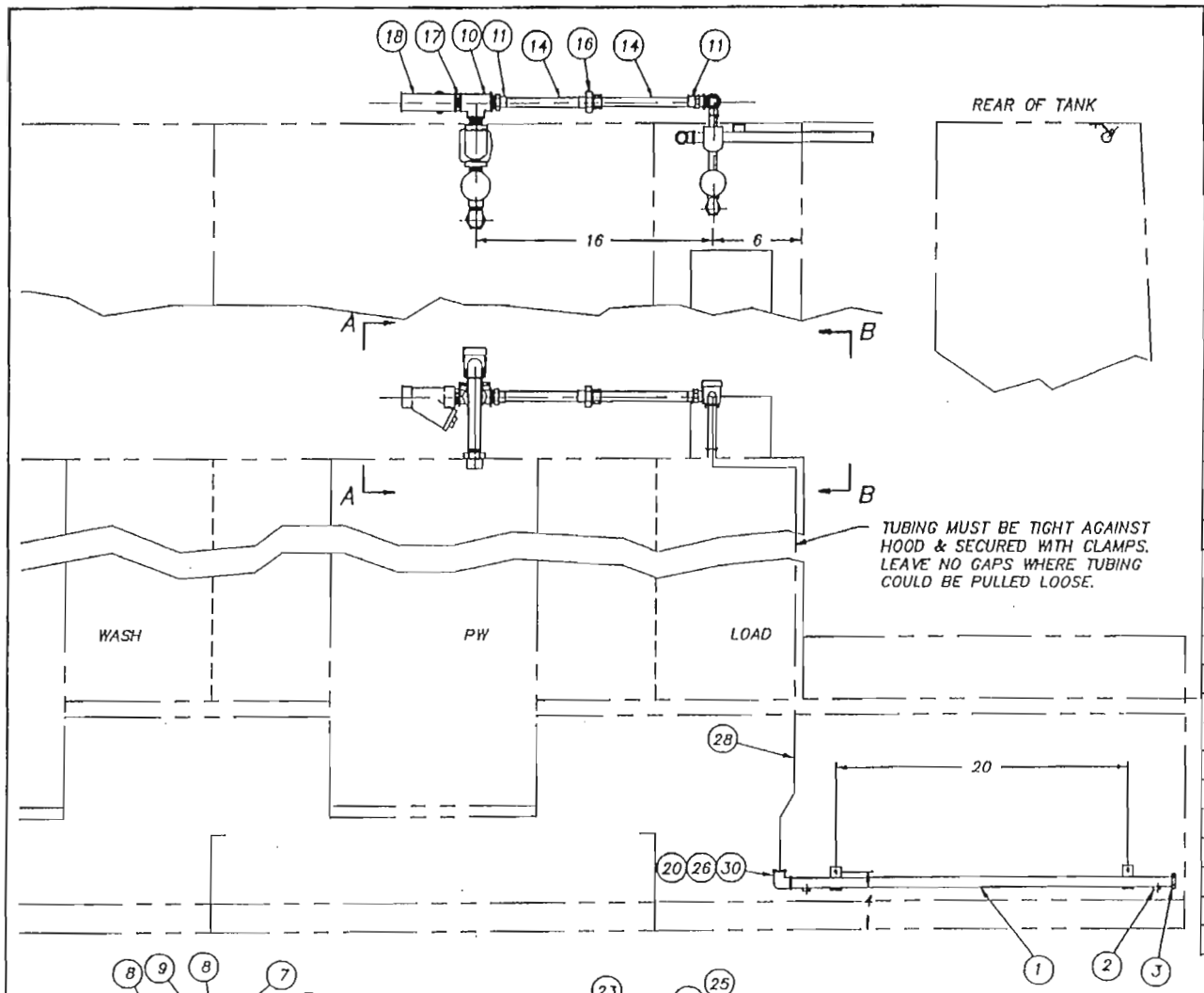

ITEM	PART NO.	SIZE	DESCRIPTION	QTY.
1	1104-81B	A	SPRAY PIPE WELDMENT 3' LOAD	1
2	D-2534	–	SPRAY NOZZLE	3
3	D2-554-1	A	PIPE PLUG 9/16-12 UNC-2A	1
4	D326F-D1	–	LOCKNUT 1/2 IPS	1
5	D314F-DL-52	–	NIPPLE 1/2 IPS X 6 1/2 L.O.E.	1
6	D316F-D1-D2	–	90° STREET ELL 1/2 IPS	2
7	D-2241	–	VACUUM BREAKER 1/2 IPS	1
8	D314F-DC-00	–	CLOSE NIPPLE 1/2 IPS	2
9	D-2606	–	SOLENOID VALVE 1/2 IPS 24V	1
10	D320F-D1D1D1	–	TEE 1/2 FIPS X 1/2 FIPS X 1/2 FIPS	1
11	D317A-D3-D2	–	ADAPTER 1/2 C X 1/2 MIPS	2
12	D328F-D2-A	–	PIPE PLUG 1/2 IPS	2
13	957-80	–	BRACKET	1
14	D207A-B4-24	–	COPPER TUBING 1/2 CTS X 6 LG	2
15	D315A-D1-D1	–	45° 1/2 FIPS X 1/2 FIPS	1
16	D318A-D3-D3	–	UNION 1/2 CTS	1
17	D314F-DC-00	–	CLOSE NIPPLE 1/2 IPS	1
18	D-2483A	–	"Y" STRAINER 1/2 IPS	1
19	–	–	–	–
20	D316F-C1-C1	–	90° ELBOW 3/8 IPS	1
21	D314F-BL-40	–	NIPPLE 1/4 IPS X 5" L.O.E.	1
22	D316F-B1-B2	–	90° STREET EL 1/4 IPS	3
23	D-2438A	–	VACUUM BREAKER 1/4 IPS	1
24	D314F-BS-12	–	NIPPLE 1/4 IPS X 1 1/2 LG	2
25	D-2605	–	SOLENOID VALVE 1/4 IPS 24V	1
26	D322F-C2-B1	–	HEX REDUCER 3/8 MIPS X 1/4 FIPS	2
27	D316F-B1-C5	–	90° ELBOW 1/4 FIPS X 3/8 COMP	1
28	D207A-N3	–	3/8 OD COPPER TUBING X 6 FT LG	1
29	D320F-D1C1D1	–	TEE 1/2 FIPS X 3/8 FIPS X 1/2 FIPS	1
30	D317F-B2-C5	–	ADAPTER 1/4 MIPS X 3/8 COMP	1
31	D326F-B1	–	LOCKNUT 1/4 IPS	1

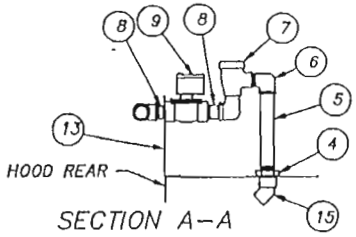

SECTION A–A

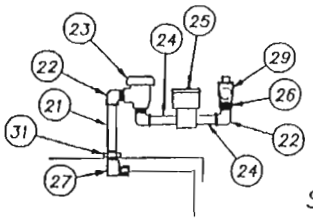

SECTION B–B

R.H. SHOWN L.H. OPPOSITE

REV	ECN NO	DATE

FILE: PARTS\1462-83

TOLERANCES
FRACTIONS ±1/64
DECIMALS
.XXX ± .005
.XX ± .01
ANGLES ±1/2°
UNLESS OTHERWISE SPECIFIED

TITLE: COLD WATER THERMOSTAT/ LOAD FLUSH PIPING

MAT'L: NOTED

NEXT ASSY: REQ'D NOTED

SCALE: 1=8

DWG. NO.: 1462-83

USED ON: DEFENDER

DRWN/DATE: CES 1.15.97

Insinger Machine Company
Philadelphia, PA 19135
(215) 624-4800
FAX (215) 624-6966

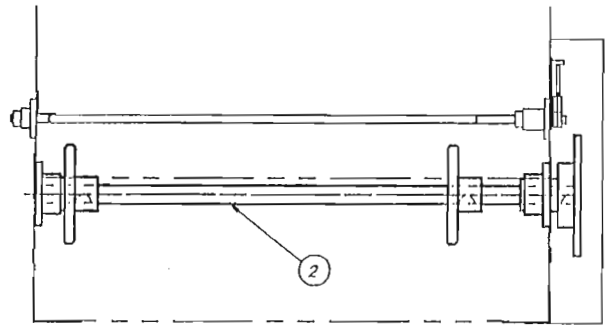

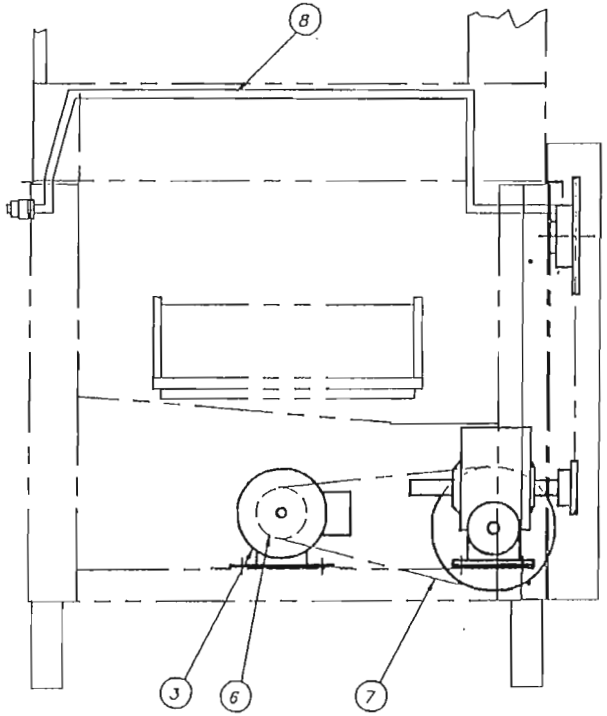

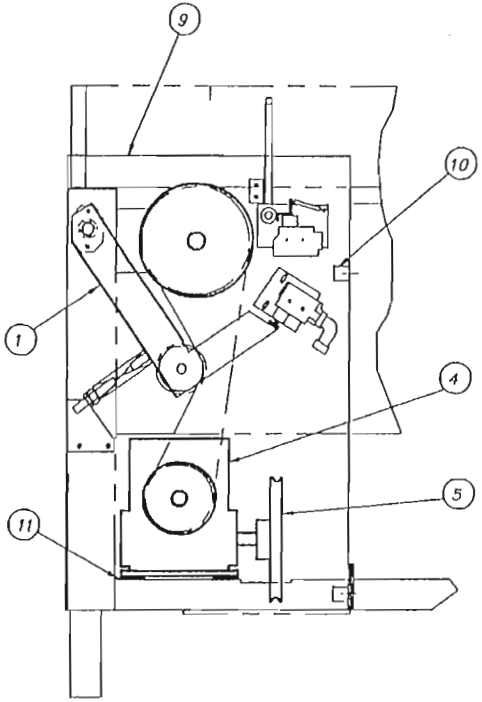

UNLOAD END

ITEM	PART NO.	SIZE	DESCRIPTION	QTY.
1	1100-289	B	CONVEYOR OVERLOAD SHUTOFF	1
2	1100-117	B	DRIVE SHAFT ASSY	1
3	–	–	MOTOR BALDOR M3108 ODP	1
4	D-2344A	–	REDUCER BOND 262B 64:1	1
5	D-2527	–	PULLEY 7.95 O.D.	1
6	818-16	A	PULLEY	1
7	D2-582	–	"V" BELT 4L450	1
8	1100-123	B	STOP BAR ASSY & LOCATION	1
9	1390-80	A	COVER, MECHANISM GUARD	1
10	D2-843	A	BRACKET, MECHANISM GUARD	2
11	1390-89	A	SHIM	2

R.H SHOWN L.H. OPPOSITE

REV	ECN NO	DATE

FILE: PARTS\1390-72

TOLERANCES
FRACTIONS ±1/64
DECIMALS
.XXX ± .005
.XX ± .01
ANGLES ±1/2°
UNLESS OTHERWISE SPECIFIED

TITLE: CONVEYOR DRIVE ASSEMBLY

MAT'L: AS NOTED

NEXT ASSY: 1390-1
REQ'D: 1
SCALE: 1=8
USED ON: CENTURY
DWG. NO. 1390-72
DRWN/DATE: PC 4.15.93

Insinger Machine Company
Philadelphia, PA 19135
(215) 624-4800
FAX (215) 624-6966

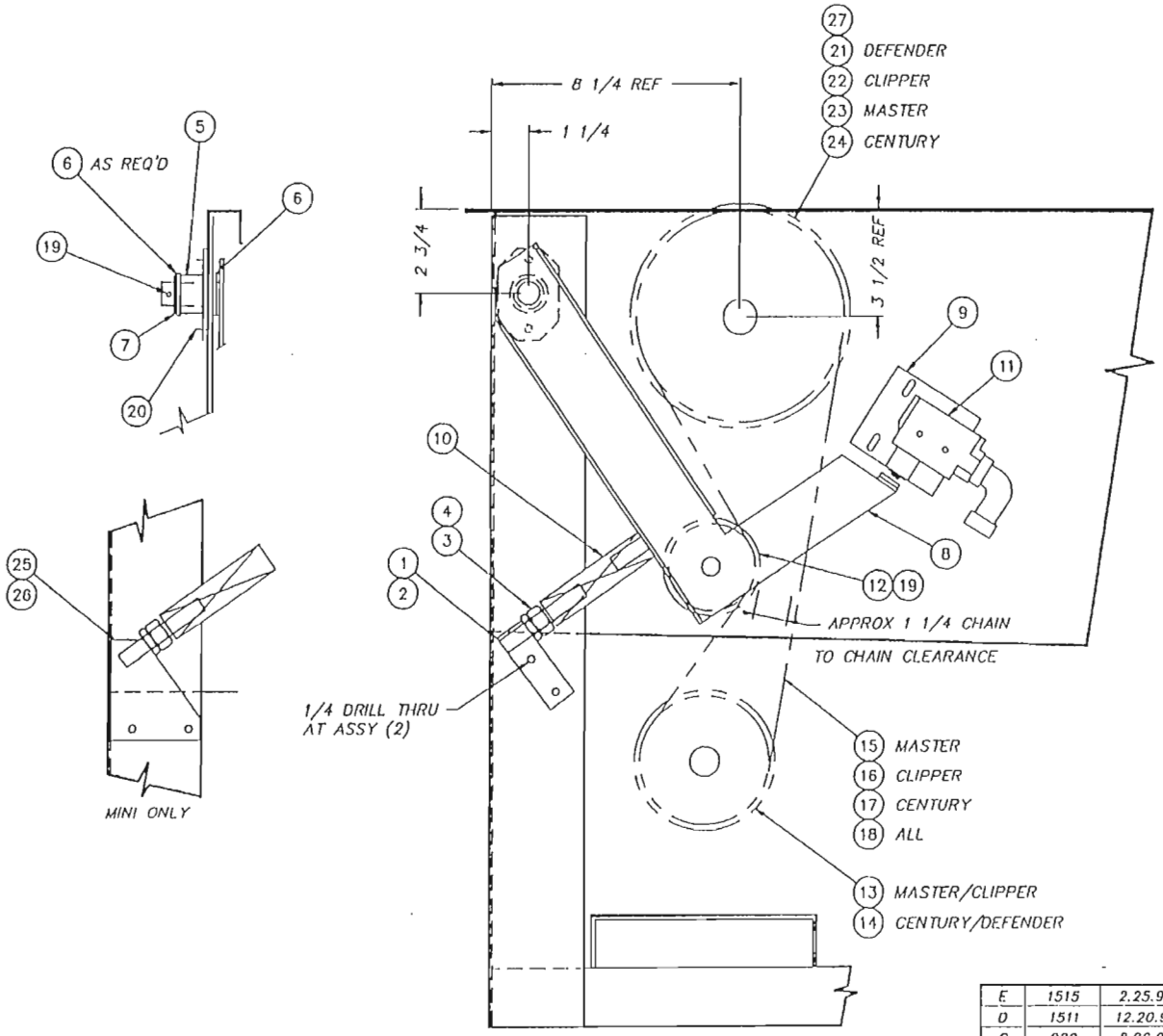

ITEM	PART NO.	DESCRIPTION	QTY.
1	1100-285	ADJUSTABLE SPRING STOP	1
2	1100-309	SHIM	1
3	D312C-LC-2	1/2-13 HEX NUT	1
4	D312C-LC-1	1/2-13 JAM NUT	1
5	1100-286	ATC PIVOT CUP	1
6	D2-525	1/8 THK SPACER	3
7	D470A	1/16 THK WASHER	1
8	1100-287	ATC ARM WELDMENT	1
9	1100-288	MICROSWITCH BRACKET	1
10	D351	SPRING	1
11	D2215A	MICROSWITCH	1
12	1100-310	IDLER SPROCKET	1
13	D2714	60B18 F 1' SPROCKET	1
14	D2760	60B13-F 1' SPROCKET	1
15	D308C-60	ROLLER CHAIN, 48 3/4 LG	1
16	D308C-60	ROLLER CHAIN, TBD LG	1
17	D308C-60	ROLLER CHAIN, 49' LG.	1
18	D308C-60CL	ROLLER CHAIN CONN. LINK	1
19	D311-22	S/S COTTER PIN, 1/8 x 1 1/4	2
20	D309C-GC-5	1/4-20 x 5/8 LG WELD STUD	2
21	D2-146A	60B29 1 1/8 SPROCKET	1
22	D-2333	60B36-F 1 1/8 SPROCKET	1
23	D2388A	60B26F 1 1/8 SPROCKET	1
24	D2761	60B30-F 1 1/8 SPROCKET	1
25	1100-311	ADJUSTABLE SPRING STOP	1
26	1100-312	SHIM	1
27	D302-2	#15 WOODRUFF KEY (1/4 X 1)	1
28	-	-	-
29	-	-	-

RIGHT HAND SHOWN LEFT HAND OPPOSITE
DRAWN TO SCALE FOR MASTER MACHINE

REV	ECN NO	DATE
E	1515	2.25.97
D	1511	12.20.96
C	929	8.26.93
B	851	3.12.93
A	560	–

FILE: PARTS\1100-289

TOLERANCES
FRACTIONS ±1/64
DECIMALS
.XXX ± .005
.XX ± .01
ANGLES ±1/2°
UNLESS OTHERWISE SPECIFIED

TITLE: CONVEYOR OVERLOAD SHUTOFF ASSEMBLY

NEXT ASSY: –
REQ'D: 1
DWG. NO.: 1100–289
MAT'L: –
SCALE: 1=4
USED ON: CLIP/MASTER

Insinger Machine Company
Philadelphia, PA 19135
(215) 624-4800
FAX (215) 624-8966

DRWN/DATE: JRS 4.15.91

ITEM	PART NO.	SIZE	DESCRIPTION	QTY.
1	1100-118	A	DRIVE SHAFT	1
2	D2-139	B	BELT SPROCKET, DRIVEN	2
3	1100-119	A	BRACKET, DRIVE SHAFT BRG	2
4	1100-120	A	BUSHING	2
5	1100-339	A	SPACER, 1/8 THK	1
6	D311-17	–	COTTER PIN, 1/8 DIA x 2	1
7	1100-122	A	SPACER, 5/16 THK	2
8	–	–	–	–
9	D302-2	–	#15 WOODRUFF KEY (1/4 x 1)	2

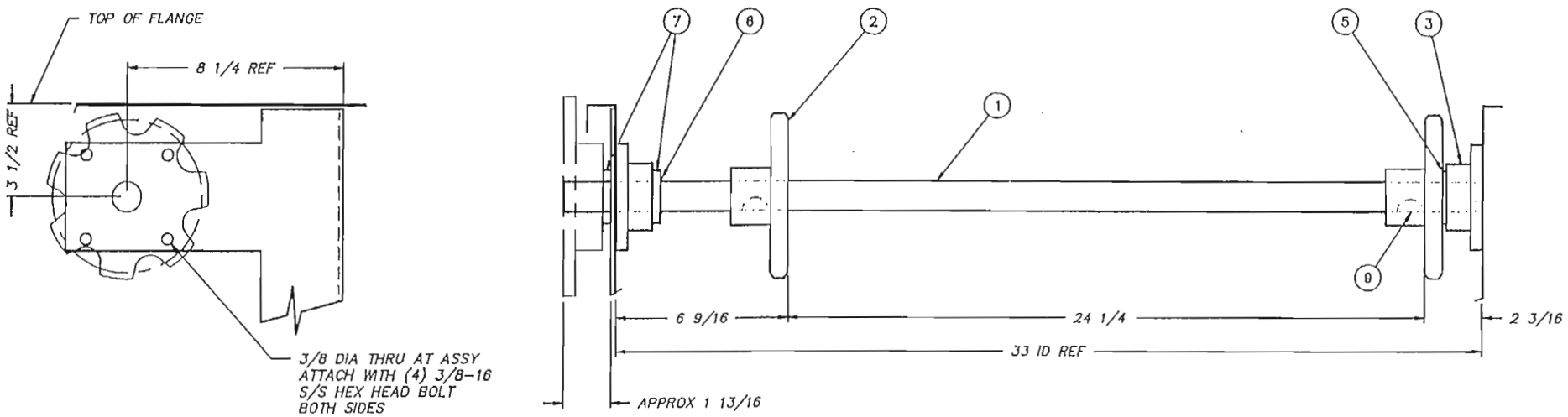

REV	ECN NO	DATE
C	1511	12.19.96
B	1365	01.31.96
A	858	3.25.93

FILE: PARTS\1100-117

TOLERANCES
FRACTIONS ±1/64
DECIMALS
.XXX ± .005
.XX ± .01
ANGLES ±1/2°
UNLESS OTHERWISE SPECIFIED

TITLE: DRIVE SHAFT ASSEMBLY

MAT'L: NOTED

NEXT ASSY: REQ'D 1

SCALE: 1/4

DWG. NO. 1100-117

USED ON

DRWN/DATE: MFJ 3.25.93

Insinger Machine Company
Philadelphia, PA 19135
(215) 624-4800
FAX (215) 624-6906

ITEM	PART NO.	SIZE	DESCRIPTION	QTY.
1	D2-138	A	SPROCKET- BELT	2
2	1100-146	A	SHAFT - DRIVEN	1
3	D2-848	A	COLLAR	4
4	1390-50	A	CHANNEL	2
5	D312C-GC-2	-	HEX NUT S/S 1/4-20	4
6	1390-51	A	ADJUSTING SCREW	2
7	D2-839	A	COLLAR	2
8	D-585	-	"O" RING (01-014)	2
9	D312C-LC-2	-	HEX NUT S/S 1/2-13	2
10	1462-38	B	LEGS	REF

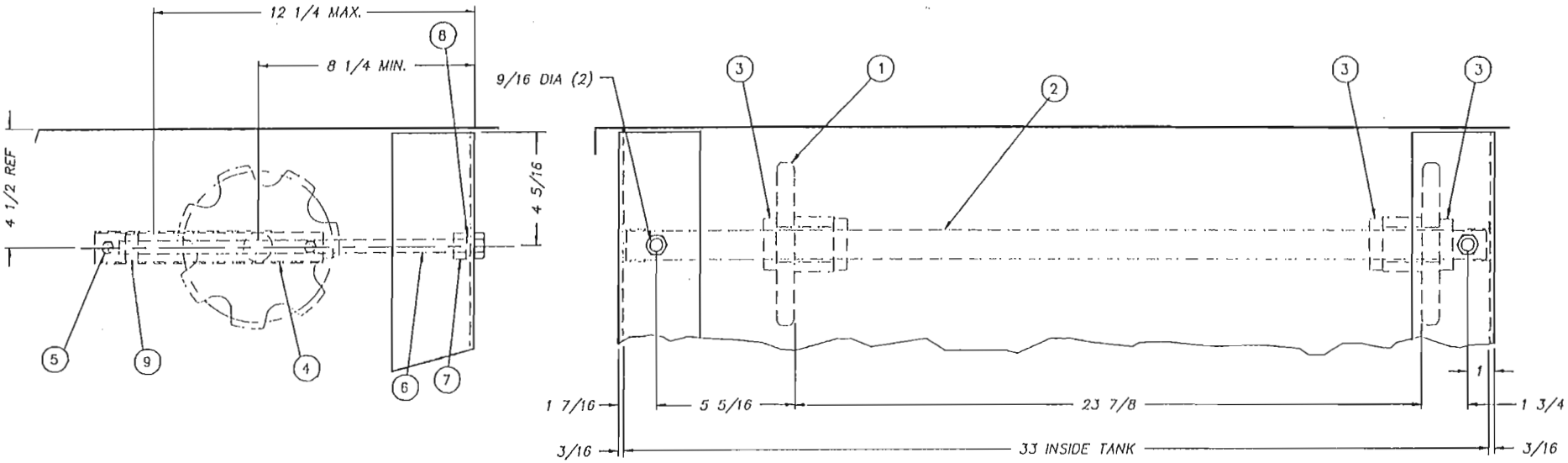

NOTE: STD MASTER\CLIPPER LEGS (#1100-46) EXCEPT HEIGHT OF 9/16 DIA HOLES

R.H. SHOWN - L.H. OPPOSITE

REV	ECN NO	DATE

FILE: PARTS\1462-21

TOLERANCES
FRACTIONS ±1/64
DECIMALS
.XXX ± .005
.XX ± .01
ANGLES ±1/2°
UNLESS OTHERWISE SPECIFIED

TITLE: DRIVEN SHAFT ASSEMBLY (LOAD END)

MAT'L: NOTED

Insinger Machine Company
Philadelphia, PA 19135
(215) 624-4800
FAX (215) 624-6966

NEXT ASSY: 1462-1
REQ'D: 1
SCALE: 1=4
DWG. NO. 1462-21
USED ON: DEFENDER
DRWN/DATE: CES 7.11.96

ITEM	DESCRIPTION	PART NO.	QTY.
1	STOP BAR	DWG. 1100-126	1
2	BEARING - FRONT	DWG. D2-141	1
3	BEARING - REAR	DWG. 1100-124	1
4	COLLAR	DWG. D2-839	2
5	BRACKET - STOP	DWG. 1100-125	1
6	BRACKET - MICROSWITCH MTG.	DWG. 1100-130	1
7	ACTUATOR - MICROSWITCH	DWG. 1100-131	1
8	SPRING	DWG. 1100-132	1
9	MICROSWITCH B2E6-2RN	D-2215A	1

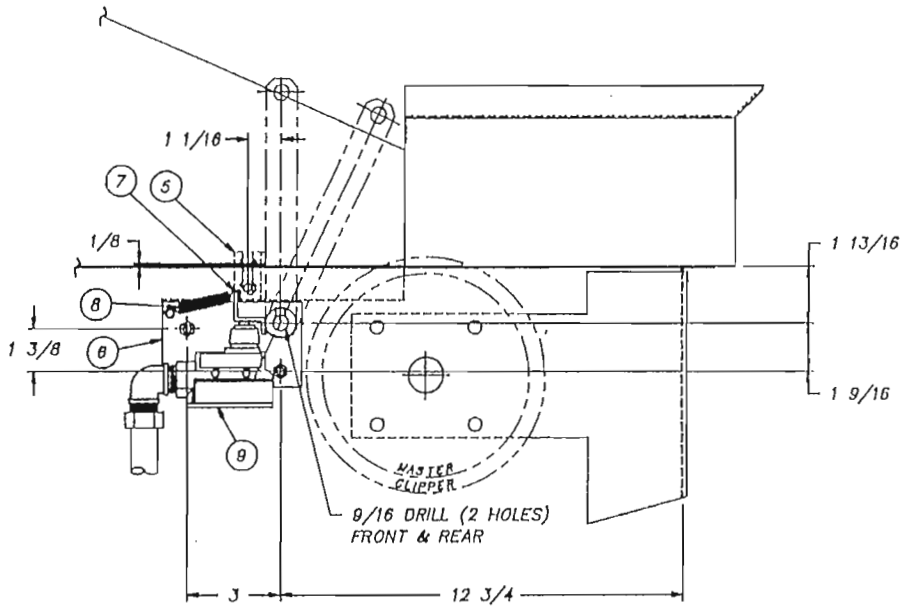

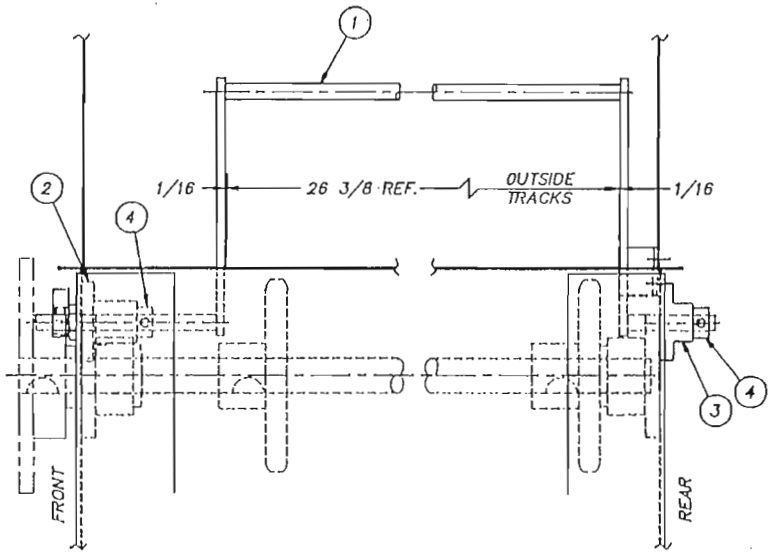

L.H.SHOWN - R.H. OPPOSITE

REV	ECN NO	DATE
A	1378	2.14.86

FILE: PARTS\1100-123

TOLERANCES
FRACTIONS ±1/64
DECIMALS
.XXX ± .005
.XX ± .01
ANGLES ±1/2°
UNLESS OTHERWISE SPECIFIED

TITLE: STOP BAR ASS'Y & LOCATION

NEXT ASSY: -
REQ'D: 1

DWG. NO.: 1100-123

MAT'L: -

SCALE: 1:4

USED ON: RC-21 W

Insinger Machine Company
Philadelphia, PA 19135
(215) 624-4800
FAX (215) 624-6966

DRWN/DATE: RAF 12.5.83

ITEM	PART NO.	SIZE	DESCRIPTION	QTY.
1	964-50	B	DRAIN ASSEMBLY	2
2	D207A-B12-11	-	COPPER TUBING 1 1/2 CTS X 2 3/4 LG	1
3	D207A-B12-16	-	COPPER TUBING 1 1/2 CTS X 4 LG	1
4	D207A-B12-8	-	COPPER TUBING 1 1/2 CTS X 2 LG	1
5	D316A-H3-H3	-	90° ELL 1 1/2 C	3
6	D207A-B12-48	-	COPPER TUBING 1 1/2 CTS X 12	2
7	D348A-J3J3H3	-	TEE DRAINAGE 2 C X 2 C X 1 1/2 C	1
8	D207A-B16-184	-	COPPER TUBING 2 CTS X 46 LG	1
9	D207A-B16-24	-	COPPER TUBING 2 CTS X 6 LG	1
10	D-134	A	FLANGE, UNLOAD	1

ITEM	PART NO.	SIZE	DESCRIPTION	QTY.
11	D-514	A	GASKET	2
12	D-106	A	STRAINER	2
13	D207A-B16-20	-	COPPER TUBING 2 CTS X 4 7/8 LG	1
14	D316A-J3-J3	-	90° ELBOW 2"C	1
15	D207A-B16-45	-	COPPER TUBING 2 CTS X 11 1/4 LG	1
16	D-90	A	CLASP STRAINER	2
17	D207A-B12-36	-	COPPER TUBING 1 1/2 CTS X 9 LG	1
18	D207A-B12-22	-	COPPER TUBING 1 1/2 CTS X 5 1/2 LG	1
19	D332A-H3-H3	-	60° ELBOW 1 1/2 C	1
20	D207A-B12-148	-	COPPER TUBING 1 1/2 CTS X 37 LG	1

ITEM	PART NO.	SIZE	DESCRIPTION	QTY.
21	D-135	A	FLANGE, LOAD (PATTERN P8-2)	1
22	D348A-J3H3H3	-	TEE DRAINAGE 2C X 1 1/2C X 1 1/2C	1
23	D348A-J3J3J3	-	TEE, DRAINAGE 2C	1
24	D317A-J4-J4	-	ADAPTER 2 FPS X 2 FTG	1
25	1103-37	A	BRACKET, PIPING SUPPORT	2
26	D316A-H3-H3	-	UNION 1 1/2 C	1
27	--	-	--	-
28	--	-	--	-

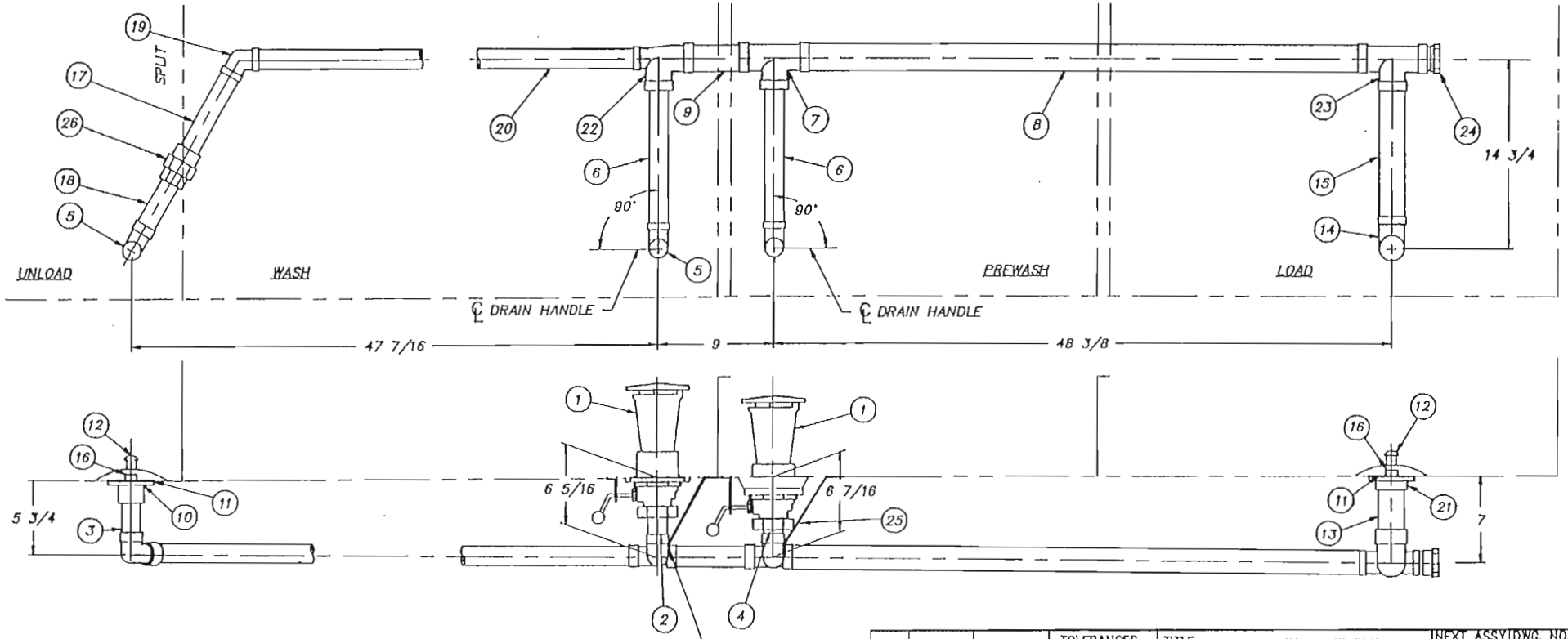

NOTE: USE 1/8" POP RIVET & SEALANT TO FASTEN SUPPORT TO DRAINAGE ELBOW.

R.H. MACHINE ONLY

REV	ECN NO	DATE

FILE: PARTS\1462-70

TOLERANCES
FRACTIONS ±1/64
DECIMALS
.XXX ± .005
.XX ± .01
ANGLES ±1/2°
UNLESS OTHERWISE SPECIFIED

TITLE: DRAIN ASSEMBLY SINGLE CONNECTION

MATL: NOTED

NEXT ASSY: -
REQ'D: NOTED
SCALE: 1/8

DWG. NO. 1462-70R
USED ON DEFENDER 17
DRWN/DATE CES 8.8.96

Insinger Machine Company
Philadelphia, PA 19135
(215) 624-4800
FAX (215) 624-8966

ITEM	PART NO.	SIZE	DESCRIPTION	QTY.	ITEM	PART NO.	SIZE	DESCRIPTION	QTY.	ITEM	PART NO.	SIZE	DESCRIPTION	QTY.
1	934-50	B	DRAIN ASSEMBLY	2	11	D-314	A	GASKET	2	21	D-135	A	FLANGE, LOAD (PATTERN P8-2)	1
2	D207A-B12-11	–	COPPER TUBING 1 1/2 CTS X 2 3/4 LG	1	12	D-108	A	STRAINER	2	22	D348A-J3J3H3	–	TEE DRAINAGE 2C X 1 1/2C X 1 1/2C	1
3	D207A-B12-18	·	COPPER TUBING 1 1/2 CTS X 4 LG	2	13	D207A-B16-20	–	COPPER TUBING 2 CTS X 4 7/8 LG	1	23	D348A-J3J3J3	–	TEE, DRAINAGE 2C	1
4	D207A-B12-9	·	COPPER TUBING 1 1/2 CTS X 2 1/4 LG	1	14	D316A-J3-J3	–	90° ELBOW 2"C	1	24	D317A-J1-J4	–	ADAPTER 2 FIPS X 2 FTG	1
5	D316A-H3-H3	·	90° ELL 1 1/2 C	3	15	D207A-B16-45	–	COPPER TUBING 2 CTS X 11 1/4 LG	1	25	1105-37	A	BRACKET, PIPING SUPPORT	2
6	D207A-B12-48	·	COPPER TUBING 1 1/2 CTS X 12	3	16	D-90	A	GLASP STRAINER	2	26	D318A-H3-H3	–	UNION 1 1/2 C	1
7	D348A-J3J3H3	·	TEE DRAINAGE 2 C X 2 C X 1 1/2 C	1	17	–	–	–	–	27	D348A-H3H3HJ	–	TEE, DRAIN 1 1/2C X 1 1/2C X 1 1/2C	1
8	D207A-B16-100	–	COPPER TUBING 2 CTS X 25 LG	1	18	–	–	–	–	28	D328F-H2A	–	PIPE PLUG 1 1/2 IPS	1
9	D207A-B16-170	–	COPPER TUBING 2 CTS X 42 1/2 LG	1	19	D332A-H3-H3	–	90° ELBOW 1 1/2 C	1					
10	D-134	A	FLANGE, UNLOAD	1	20	D207A-B12-116	–	COPPER TUBING 1 1/2 CTS X 29 LG	1					

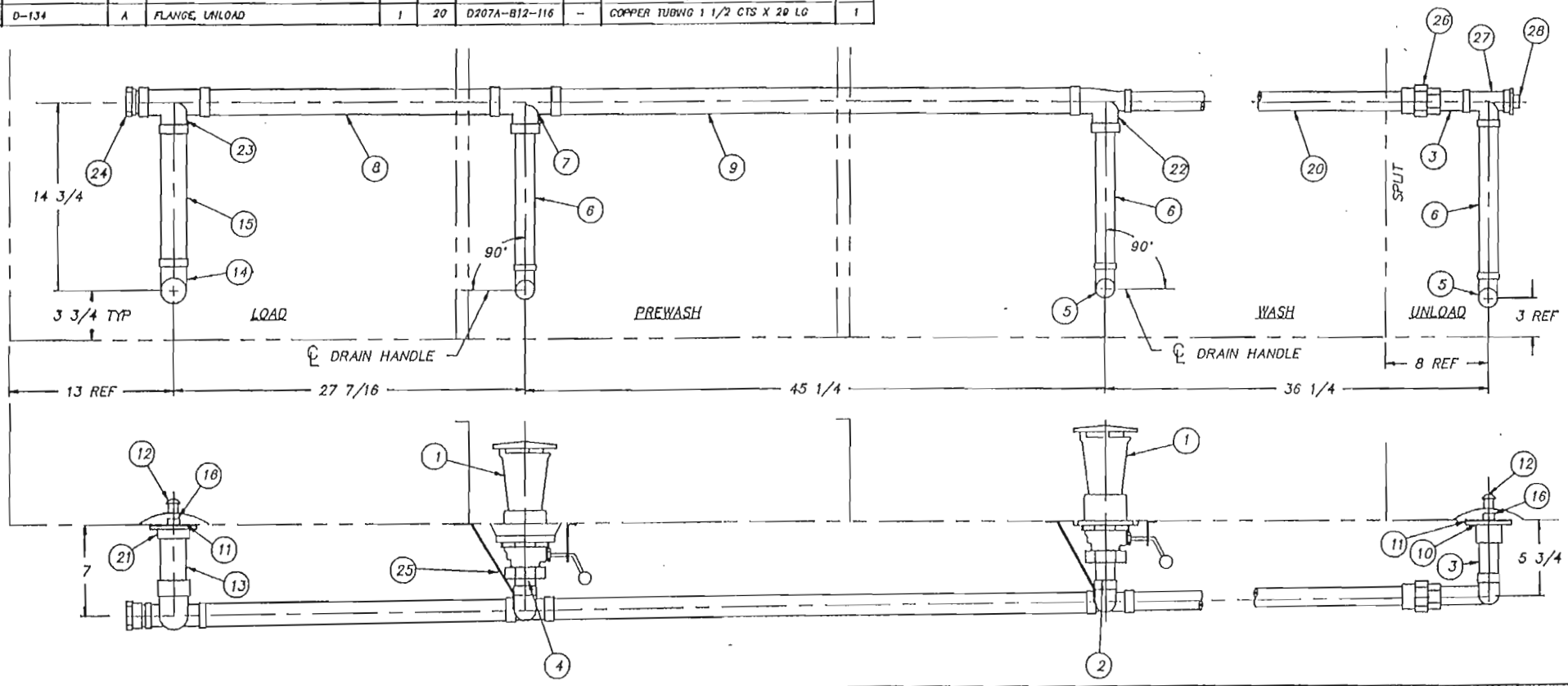

L.H. MACHINE ONLY

REV	ECN NO	DATE

FILE: PARTS\1462-70

TOLERANCES
FRACTIONS ±1/64
DECIMALS
.XXX ± .005
.XX ± .01
ANGLES ±1/2°
UNLESS OTHERWISE SPECIFIED

TITLE: DRAIN ASSEMBLY SINGLE CONNECTION

MAT'L: NOTED

NEXT ASSY: –
REQ'D: NOTED
SCALE: 1/8

DWG. NO. 1462-70L
USED ON: DEFENDER 17
DRWN/DATE: CES 8.9.96

Insinger Machine Company
Philadelphia, PA 19135
(215) 624-4800
FAX (215) 624-6966

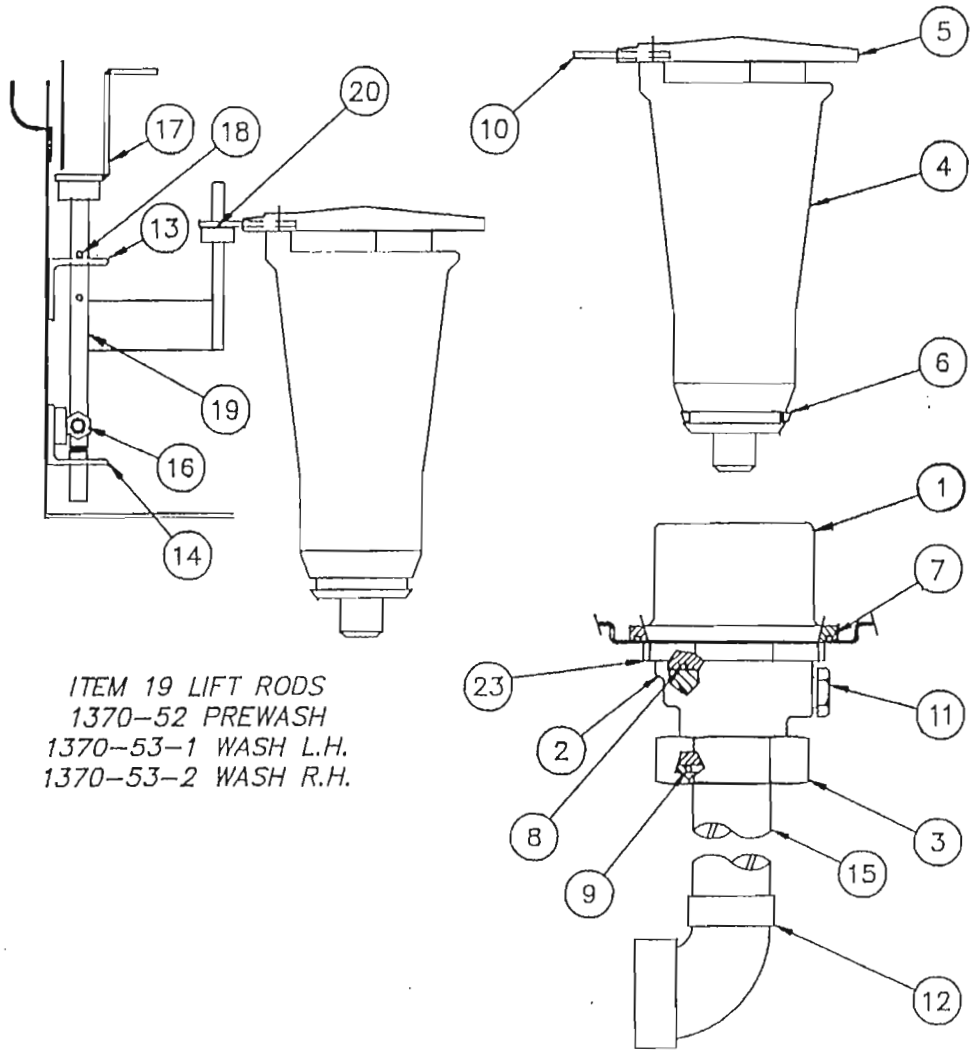

ITEM 19 LIFT RODS
1370–52 PREWASH
1370–53–1 WASH L.H.
1370–53–2 WASH R.H.

ITEM	PART NO.	DESCRIPTION	QTY.
1	954–50A	UPPER BODY	1
2	954–50B	LOWER BODY	1
3	954–50C	NUT	1
4	954–50D	OVERFLOW TUBE	1
5	1370–3	SKIMMER CAP (MODIFIED)	1
6	D2–557	"V" SEAL	1
7	D2–548	O RING	1
8	D2–549	O RING	1
9	D2–550	O RING	2
10	1370–5	SKIMMER CAP TAB	1
11	1370–11	PLUG	1
12	D316A–H3–H1	90° ELL 1–1/2 C x 1–1/2 FPT	1
13	1370–6	UPPER BRACKET	1
14	1370–7	LOWER BRACKET	1
15	D–207A–B12–17	CU TUBE, 1–1/2 CTS x 4–1/4 LG	1
16	D2738	SPRING PLUNGER	1
17	1370–30	LIFT HANDLE	1
18	D311–8	ROLL PIN, 1/8 DIA	2
19	SEE TABLE	LIFT ROD	1
20	D2739	CLAMP COLLAR, 1/4 DIA	1
21	SK 3476	DECAL	1
22	1370–51	INSTALLATION NOTES	X
23	D305	DRAIN LOCKING NUT	1

REV	ECN NO	DATE

FILE: PARTS\1370–54

TOLERANCES
FRACTIONS ±1/64
DECIMALS
.XXX ± .005
.XX ± .01
ANGLES ±1/2°
UNLESS OTHERWISE SPECIFIED

TITLE: DRAIN ASSY – SELF CLOSING DEFENDER STEAM HEAT

NEXT ASSY: –
REQ'D: 2
DWG. NO.: 1370–54
MAT'L: NOTED
SCALE: 1=4
USED ON: DEFENDER

Insinger Machine Company
Philadelphia, PA 19135
(215) 624–4800
FAX (215) 624–6966

DRWN/DATE: CES 1.3.97

ITEM	PART NO.	SIZE	DESCRIPTION	QTY.
1	D317A-L3-L2	–	ADAPTER 3 MIPS X 3 C	1
2	D316A-L3-L4	–	90° STREET ELBOW 3 CTS X 3 CFTG	1
3	D207A-K24	–	COPPER TUBING 3 CTS X 3 1/4 LG	1
4	D-530	A	GASKET	1
5	1104-68	A	FLANGE, TANK	1
6	D2-135	A	FLANGE, STRAINER	1
7	D309C-JC-12	–	HEX HD SCR 3/8-16 X 1 1/2 LG	4

ITEM	PART NO.	SIZE	DESCRIPTION	QTY.
8	D313A-1J	–	COPPER WASHER 3/8	4
9	D312C-JC-5	–	LOCKNUT 3/8-16	4
10	D2-541	A	STRAINER	1
11	D3-825	A	CLASP	1
12	D312C-EF-8	–	ALL-METAL LOCKNUT #10-32 S/S	1

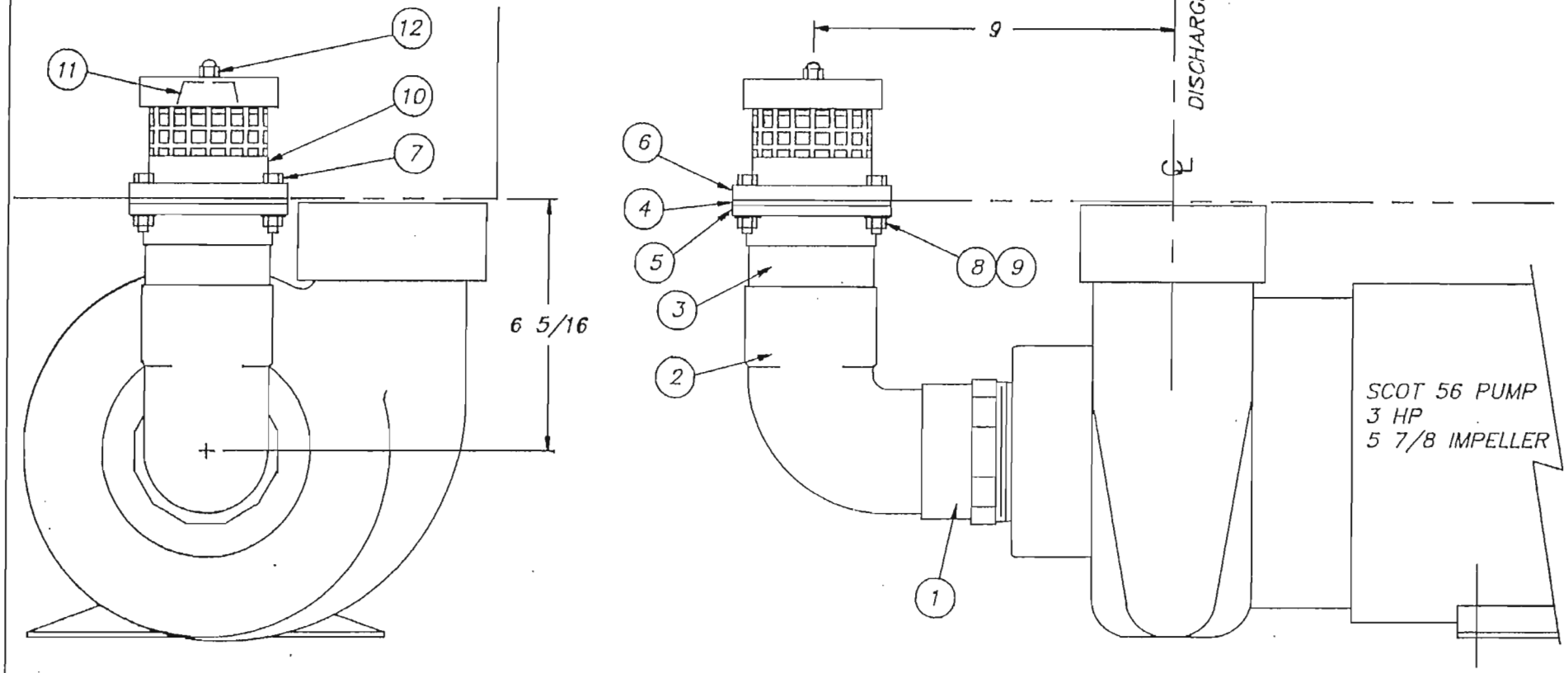

NOTE: SAME AS #1104-69

REV	ECN NO	DATE

FILE: PARTS\1462-69

TOLERANCES
FRACTIONS ±1/64
DECIMALS
.XXX ± .005
.XX ± .01
ANGLES ±1/2°
UNLESS OTHERWISE SPECIFIED

TITLE: SUCTION LINE ASSY SCOT PUMP

MAT'L: NOTED

NEXT ASSY

REQ'D NOTED

SCALE 1/4

DWG. NO. 1462-69

USED ON DEFENDER 17

DRWN/DATE CES 9.6.96

Insinger Machine Company
Philadelphia, PA 19135
(215) 624-4800
FAX (215) 624-6966

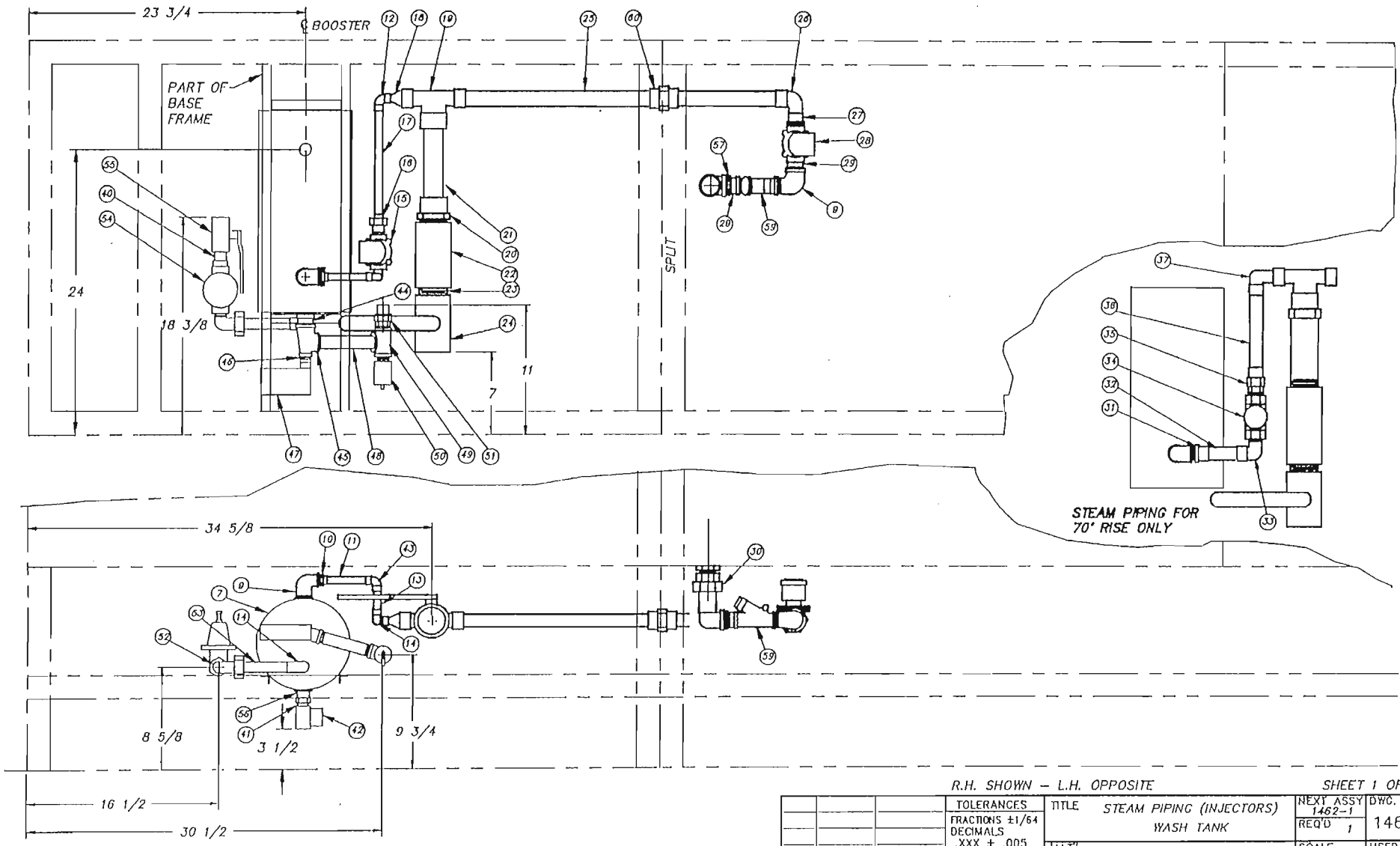

R.H. SHOWN – L.H. OPPOSITE

SHEET 1 OF 2

REV	ECN NO	DATE

FILE: PARTS\1462-72

TOLERANCES
FRACTIONS ±1/64
DECIMALS
.XXX ± .005
.XX ± .01
ANGLES ±1/2°
UNLESS OTHERWISE SPECIFIED

TITLE: STEAM PIPING (INJECTORS) WASH TANK

MAT'L: AS NOTED

NEXT ASSY: 1462-1
REQ'D: 1
SCALE: 1=8
DWG. NO.: 1462-72
USED ON: DEFENDER
DRWN/DATE: CES 2.26.97

Insinger Machine Company
Philadelphia, PA 19135
(215) 624-4800
FAX (215) 624-6068

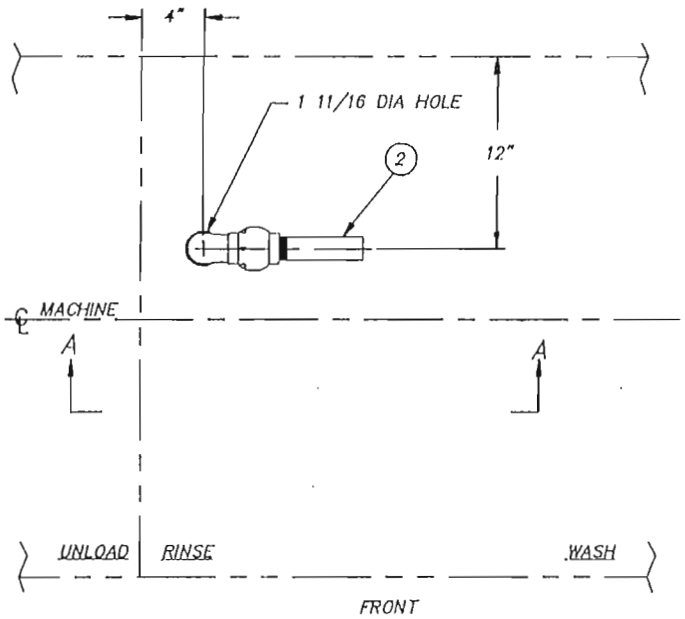

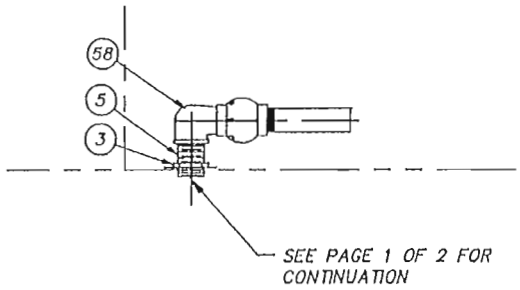

VIEW A – A

R.H. SHOWN – L.H. OPPOSITE

FOR 70° RISE

ITEM	PART NO.	DESCRIPTION	QTY.
31	D317A-F3-F2	ADAPTER 1" C X 1" MIPS	1
32	D207A-B8-16	COPPER TUBING 1" IPS X 4	1
33	D316A-F3-F2	90° ELBOW 1" C X 1" MIPS	1
34	–	SAME AS ITEM #28	1
35	D318A-F3-F2	UNION 1" C X 1" MIPS	1
36	D207A-B8-31	COPPER TUBING 1" CTS X 7 3/4	1
37	D316A-F4-F3	90° ELBOW 1" FTG X 1" C	1
38	D323A-G4-F3	FLUSH BUSH 1 1/4 FTG X 1" C	1
39	–	–	–
40	D314F-EC-00	NIPPLE CLOSE 3/4 IPS	1
41	D314F-DC-00	NIPPLE CLOSE 1/2 IPS	1
42	D2102A	STEAM TRAP 1/2 IPS	1
43	D316A-E3-E3	90° ELBOW 3/4 C	1
44	D314F-FC-00	NIPPLE CLOSE 1" IPS	1
45	D320F-F1D1E1	TEE 1"FIPS X 1/2FIPS X 3/4 FIPS	1
46	D322F-D2-C1	HEX RED 1/2 MIPS X 3/8 FIPS	1
47	D2396	THERMOSTAT (SEE NOTE #2)	1
48	D314A-ES-43	NIPPLE 3/4 IPS X 5 3/8	1
49	D320F-E1E1E1	TEE 3/4 IPS	1
50	D2507	PRESSURE RELIEF VALVE 3/4 IPS	1
51	D318A-E3-E2	UNION 3/4 C X 3/4 MIPS	1
52	D319A-E3-E2	90° UNION ELL 3/4 C X 3/4 MIPS	1
53	D207A-B6-24	COPPER TUBING 3/4 CTS X 6	1
54	D1012	PRESSURE REG & STRAINER 3/4 IPS	1
55	D2340	BALL VALVE 3/4 IPS	1
56	D322F-E2-D1	HEX RED 3/4 MIPS X 1/2 FIPS	1
57	D322F-G2-F1	HEX RED 1 1/4 MIPS X 1" FIPS	1
58	D316A-G1-G2	90° STREET ELL 1 1/4 IPS	1
59	D2291	CHECK VALVE 1" IPS	1
60	D318A-F3-F3	UNION 1" C	1

FOR 40° RISE

ITEM	PART NO.	DESCRIPTION	QTY.
1			
2	D-2456	STEAM INJECTOR – 1 1/4 IPS	1
3	D326F-G	LOCKNUT 1 1/4 IPS	1
4			
5	D314F-GA-16	NIPPLE 1 1/4 IPS X 2 ALL THD	1
6			
7	D 2100	STEAM BOOSTER (1-2) (SEE NOTE #1)	1
8	–	–	–
9	D316F-F2-F1	90° STREET ELL 1" MIPS X 1" FIPS	2
10	D317A-E3-F2	ADAPTER 3/4 C X 1" MIPS	1
11	D207A-B6-17	COPPER TUBING 3/4 CTS X 4 1/4	1
12	D316A-E4-E3	90° STREET ELL 3/4 FTG X 3/4 C	1
13	D207A-B6-10	COPPER TUBING 3/4 CTS X 2 1/2	1
14	D316A-E3-E2	90° ELBOW 3/4 C X 3/4 MIPS	2
15	D2595	SOLENOID VALVE 3/4 IPS	1
16	D318F-E3-E2	UNION 3/4 C X 3/4 MIPS	1
17	D207A-B6-42	COPPER TUBING 3/4 CTS X 10 1/2	1
18	D323A-F4-E3	RED. BUSHING 1" FTG X 3/4 C	1
19	D320A-F3F3H3	TEE 1" C X 1" C X 1 1/2" C	1
20	D317A-H3H2	ADAPTER 1 1/2 C X 1 1/2 MIPS	1
21	D201A-B12-36	COPPER TUBING 1 1/2 CTS X 9	1
22	D2848	"Y" STRAINER 1 1/2 IPS	1
23	D314F-HC-00	NIPPLE CLOSE 1 1/2 IPS	1
24	D2849	BALL VALVE 1 1/2 IPS	1
25	D207A-K8-68	COPPER TUBING 1" CTS X 17	1
26	D316A-F3-F4	90° ELBOW 1" C X 1" CFTG	1
27	D317A-F3-F2	ADAPTER 1" C X 1" MIPS	1
28	D2772	SOLENOID VALVE 1" IPS	1
29	D314F-FS-8	NIPPLE 1" IPS X 1" LG	2
30	D319F-G1-G1	90° UNION ELL 1 1/4 IPS	1

NOTE :
1. (ITEM #7) ADD SUFFIX "NM" FOR NON-MAGNETIC MACHINES.
2. (ITEM #47) USE PART NO. D2396 AS STANDARD AND PART NO. D2301 WHEN LOW TEMP. CUT-OFF IS SPECIFIED.

SHEET 2 OF 2

REV	ECN NO	DATE

FILE: PARTS\1462-72

TOLERANCES
FRACTIONS ±1/64
DECIMALS
.XXX ± .005
.XX ± .01
ANGLES ±1/2°
UNLESS OTHERWISE SPECIFIED

TITLE	STEAM PIPING (INJECTORS) WASH TANK	NEXT ASSY 1462-1 REQ'D 1	DWG. NO. 1462-72
MAT'L	AS NOTED	SCALE 1=8	USED ON DEFENDER
Insinger Machine Company	Philadelphia, PA 19135 (215) 624-4600 FAX (215) 624-6966		DRWN/DATE CES 2.26.97

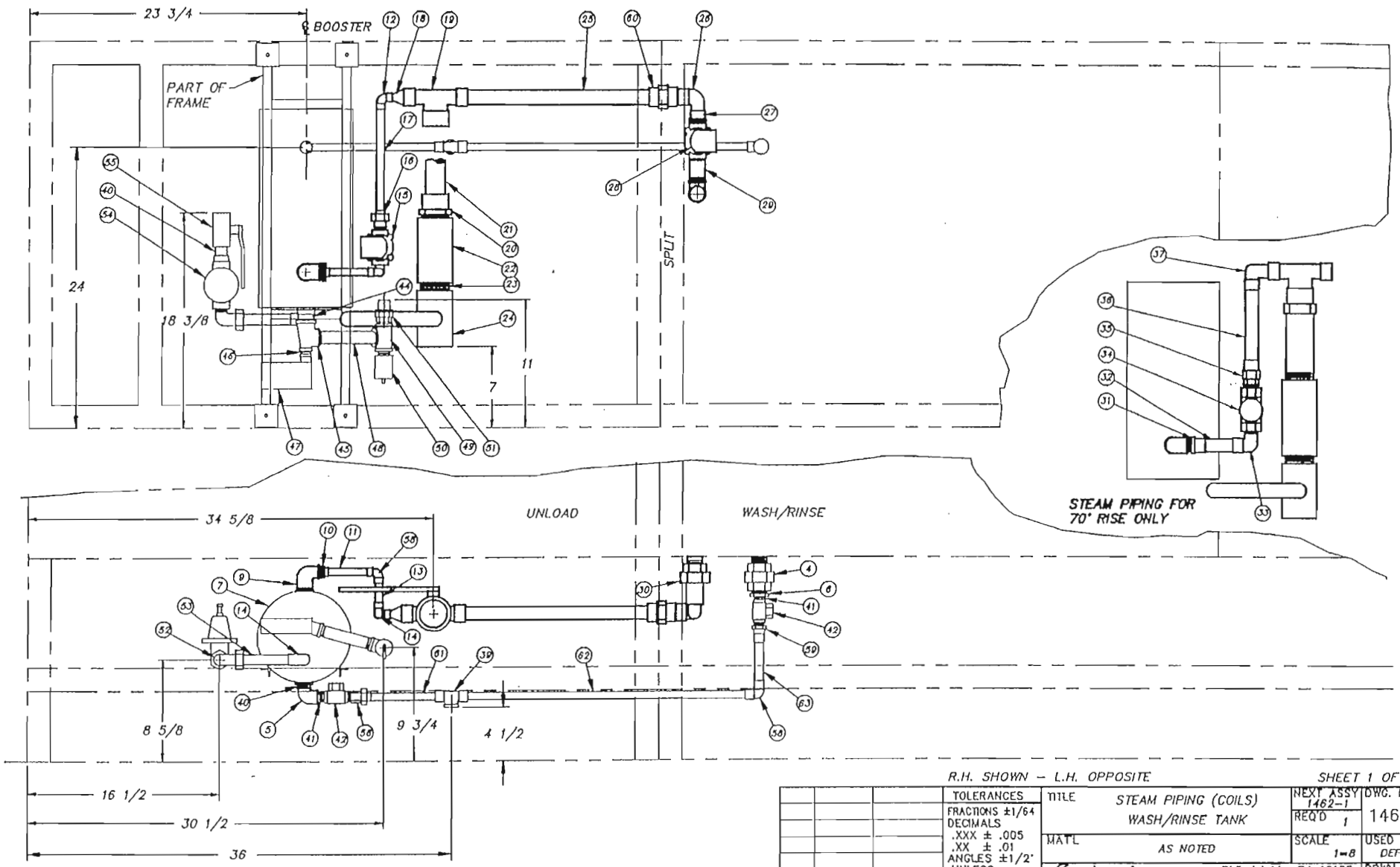

R.H. SHOWN – L.H. OPPOSITE

SHEET 1 OF 2

REV	ECN NO	DATE

FILE: PARTS\1462-86

TOLERANCES
FRACTIONS ±1/64
DECIMALS
.XXX ± .005
.XX ± .01
ANGLES ±1/2°
UNLESS OTHERWISE SPECIFIED

TITLE: STEAM PIPING (COILS) WASH/RINSE TANK

MAT'L: AS NOTED

NEXT ASSY: 1462-1
REQ'D: 1
SCALE: 1=8
DWG. NO.: 1462-86
USED ON: DEFENDER
DRWN/DATE: CES 1.31.97

Insinger Machine Company
Philadelphia, PA 19135
(215) 624-4800
FAX (215) 624-6966

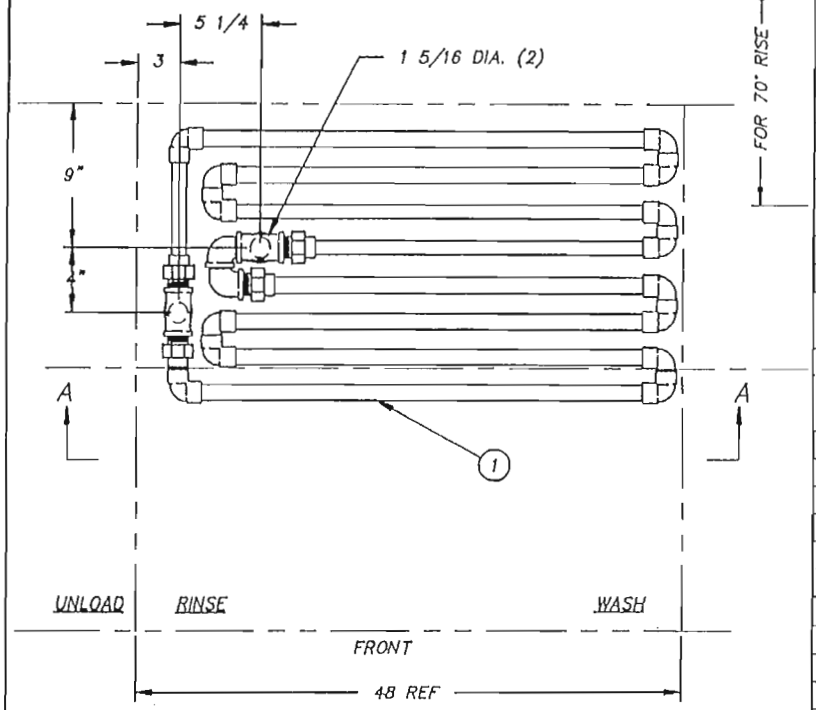

VIEW A – A

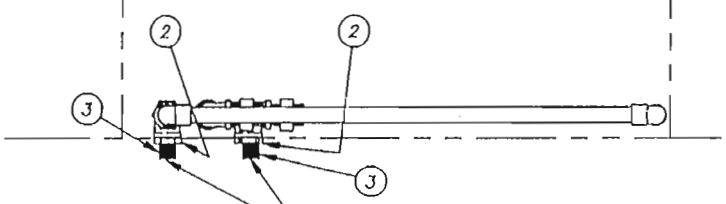

SEE PAGE 1 OF 2 FOR CONTINUATION

ITEM	PART NO.	DESCRIPTION	QTY.
31	D317A-F3-F2	ADAPTER 1" C X 1" MIPS	1
32	D207A-B8-16	COPPER TUBING 1" IPS X 4	1
33	D316A-F3-F2	90° ELBOW 1" C X 1" MIPS	1
34	–	SAME AS ITEM #28	1
35	D318A-F3-F2	UNION 1" C X 1" MIPS	1
36	D207A-B8-31	COPPER TUBING 1" CTS X 7 3/4	1
37	D316A-F4-F3	90° ELBOW 1" FTG X 1" C	1
38	–	–	–
39	D320A-E3D3E1	TEE 3/4 C X 1/2 C X 3/4 FIPS	1
40	D314F-EC-00	NIPPLE CLOSE 3/4 IPS	2
41	D314F-DC-00	NIPPLE CLOSE 1/2 IPS	2
42	D2102A	STEAM TRAP 1/2 IPS	2
43	D316A-D3-D3	90° ELBOW 1/2 C	1
44	D314F-FC-00	NIPPLE CLOSE 1" IPS	1
45	D320F-F1D1E1	TEE 1"FIPS X 1/2FIPS X 3/4 FIPS	1
46	D322F-D2-C1	HEX RED 1/2 MIPS X 3/8 FIPS	1
47	D2396	THERMOSTAT (SEE NOTE #2)	1
48	D314A-ES-43	NIPPLE 3/4 IPS X 5 3/8	1
49	D320F-E1E1E1	TEE 3/4 IPS	1
50	D2507	PRESSURE RELIEF VALVE 3/4 IPS	1
51	–	–	–
52	D319A-E3-E2	90° UNION ELL 3/4 C X 3/4 MIPS	1
53	D207A-B6-24	COPPER TUBING 3/4 CTS X 6	1
54	D1012	PRESSURE REG & STRAINER 3/4 IPS	1
55	D2340	BALL VALVE 3/4 IPS	1
56	D318F-D3-D2	UNION 1/2 C X 1/2 MIPS	1
57	–	–	–
58	D316A-E3-E3	90° ELBOW 3/4 C X 3/4 C	2
59	D317A-E3-D2	ADAPTER 3/4 C X 1/2 MIPS	1
60	D318A-F3-F3	UNION 1" C	1
61	D207A-B4-25	COPPER TUBING 1/2 CTS X 6 1/4	1
62	D207A-B6-102	COPPER TUBING 3/4 CTS X 25 1/2	1
63	D207A-B6-19	COPPER TUBING 3/4 CTS X 4 3/4	1

ITEM	PART NO.	DESCRIPTION	QTY.
1	9019-02	STEAM COIL – RINSE (MASTER)	1
2	D326F-F1	LOCKNUT 1" IPS	2
3	D314F-FA-16	NIPPLE 1" IPS X 2" ALL THD.	2
4	D318F-F1-F1	UNION 1" FIPS X 1" FIPS	1
5	D316F-E2-E1	90° RED ELL 3/4 FIPS X 1/2 FIPS	1
6	D322F-F2-D1	HEX RED BUSH 1" MIPS X 1/2 FIPS	1
7	D 2100	STEAM BOOSTER (1-2) (SEE NOTE #1)	1
8	–	–	1
9	D316F-F2-F1	90° STREET ELL 1" MIPS X 1" FIPS	1
10	D317A-E3-F2	ADAPTER 3/4 C X 1" MIPS	1
11	D207A-B6-17	COPPER TUBING 3/4 CTS X 4 1/4	1
12	D316A-E4-E3	90° STREET ELL 3/4 FTG X 3/4 C	1
13	D207A-B6-10	COPPER TUBING 3/4 CTS X 2 1/2	1
14	D316A-E3-E2	90° ELBOW 3/4 C X 3/4 MIPS	1
15	D2595	SOLENOID VALVE 3/4 IPS	1
16	D318F-E3-E2	UNION 3/4 C X 3/4 MIPS	2
17	D207A-B6-42	COPPER TUBING 3/4 CTS X 10 1/2	1
18	D323A-F4-E3	RED. BUSHING 1" FTG X 3/4 C	1
19	D320A-F3F3H3	TEE 1" C X 1" C X 1 1/2" C	1
20	D317A-H3H2	ADAPTER 1 1/2 C X 1 1/2 MIPS	1
21	D201A-B12-36	COPPER TUBING 1 1/2 CTS X 9	1
22	D2848	"Y" STRAINER 1 1/2 IPS	1
23	D314F-HC-00	NIPPLE CLOSE 1 1/2 IPS	1
24	D2849	BALL VALVE 1 1/2 IPS	1
25	D207A-K8-68	COPPER TUBING 1" CTS X 17	1
26	D316A-F3-F4	90° ELBOW 1" C X 1" OFTG	1
27	D317A-F3-F2	ADAPTER 1" C X 1" MIPS	1
28	D2772	SOLENOID VALVE 1" IPS	1
29	D314F-FS-16	NIPPLE 1" IPS X 2	1
30	D319F-F1-F1	90° UNION ELL 1" IPS	1

FOR 40" RISE

NOTE :
1. (ITEM #7) ADD SUFFIX "NM" FOR NON-MAGNETIC MACHINES.
2. (ITEM #47) USE PART NO. D2396 AS STANDARD AND PART NO. D2301 WHEN LOW TEMP. CUT-OFF IS SPECIFIED.

R.H. SHOWN – L.H. OPPOSITE

SHEET 2 OF 2

REV	ECN NO	DATE

FILE: PARTS\1462-86

TOLERANCES: FRACTIONS ±1/64, DECIMALS .XXX ± .005, .XX ± .01, ANGLES ±1/2° UNLESS OTHERWISE SPECIFIED

TITLE: STEAM PIPING (COILS) WASH/RINSE TANK

NEXT ASSY: 1462-1 REQ'D 1

DWG. NO. 1462-86

MAT'L: AS NOTED

SCALE: 1=8

USED ON: DEFENDER

Insinger Machine Company, Philadelphia, PA 19135, (215) 624-4800, FAX (215) 624-6066

DRWN/DATE: CES 2.20.97

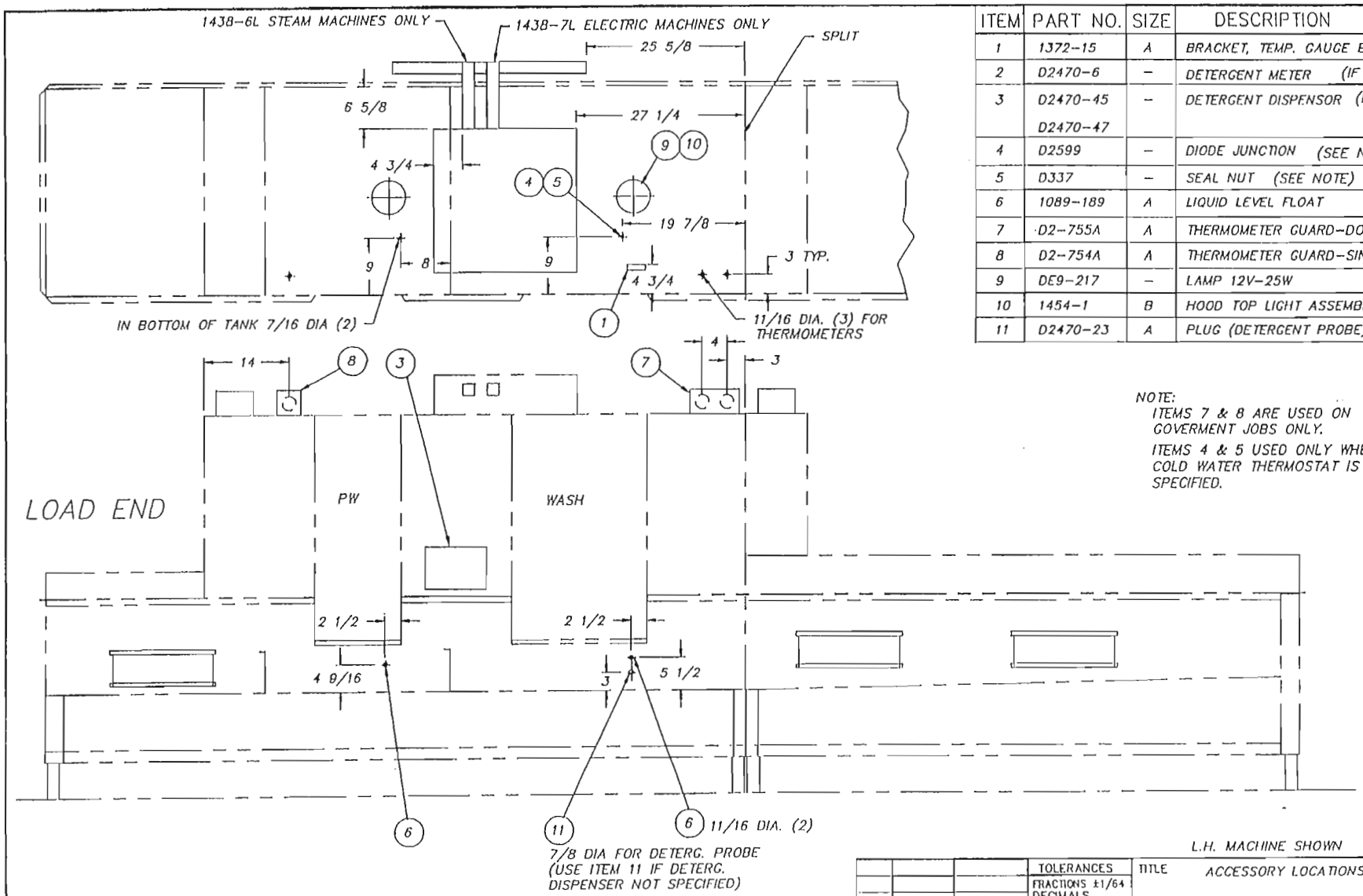

ITEM	PART NO.	SIZE	DESCRIPTION	QTY.
1	1372-15	A	BRACKET, TEMP. GAUGE BULB	1
2	D2470-6	–	DETERGENT METER (IF SPECIFIED)	1
3	D2470-45 D2470-47	–	DETERGENT DISPENSOR (IF SPECIFIED)	1
4	D2599	–	DIODE JUNCTION (SEE NOTE)	1
5	D337	–	SEAL NUT (SEE NOTE)	1
6	1089-189	A	LIQUID LEVEL FLOAT	2
7	D2-755A	A	THERMOMETER GUARD-DOUBLE (SEE NOTE)	1
8	D2-754A	A	THERMOMETER GUARD-SINGLE (SEE NOTE)	1
9	DE9-217	–	LAMP 12V-25W	2
10	1454-1	B	HOOD TOP LIGHT ASSEMBLY	2
11	D2470-23	A	PLUG (DETERGENT PROBE)	1

NOTE:
ITEMS 7 & 8 ARE USED ON GOVERMENT JOBS ONLY.
ITEMS 4 & 5 USED ONLY WHEN COLD WATER THERMOSTAT IS SPECIFIED.

L.H. MACHINE SHOWN

SHEET 1 OF 2

REV	ECN NO	DATE

FILE: PARTS\1462-78

TOLERANCES
FRACTIONS ±1/64
DECIMALS
.XXX ± .005
.XX ± .01
ANGLES ±1/2°
UNLESS OTHERWISE SPECIFIED

TITLE: ACCESSORY LOCATIONS
NEXT ASSY
REQ'D 1
DWG. NO. 1462-78
MATL: NOTED
SCALE 1=16
USED ON DEFENDER

Insinger Machine Company
Philadelphia, PA 19135
(215) 624-4800
FAX (215) 624-6966

DRWN/DATE PG 12.27.96

ITEM	PART NO.	SIZE	DESCRIPTION	QTY.
1	1372-15	A	BRACKET, TEMP. GAUGE BULB	1
2	D2470-6	–	DETERGENT METER (IF SPECIFIED)	1
3	D2470-45 D2470-47	–	DETERGENT DISPENSOR (IF SPECIFIED)	1
4	D2599	–	DIODE JUNCTION (SEE NOTE)	1
5	D337	–	SEAL NUT (SEE NOTE)	1
6	1089-189	A	LIQUID LEVEL FLOAT	2
7	D2-755A	A	THERMOMETER GUARD-DOUBLE (SEE NOTE)	1
8	D2-754A	A	THERMOMETER GUARD-SINGLE (SEE NOTE)	1
9	DE9-217	–	LAMP 12V-25W	2
10	1454-1	B	HOOD TOP LIGHT ASSEMBLY	2
11	D2470-23	A	PLUG (DETERGENT PROBE)	1

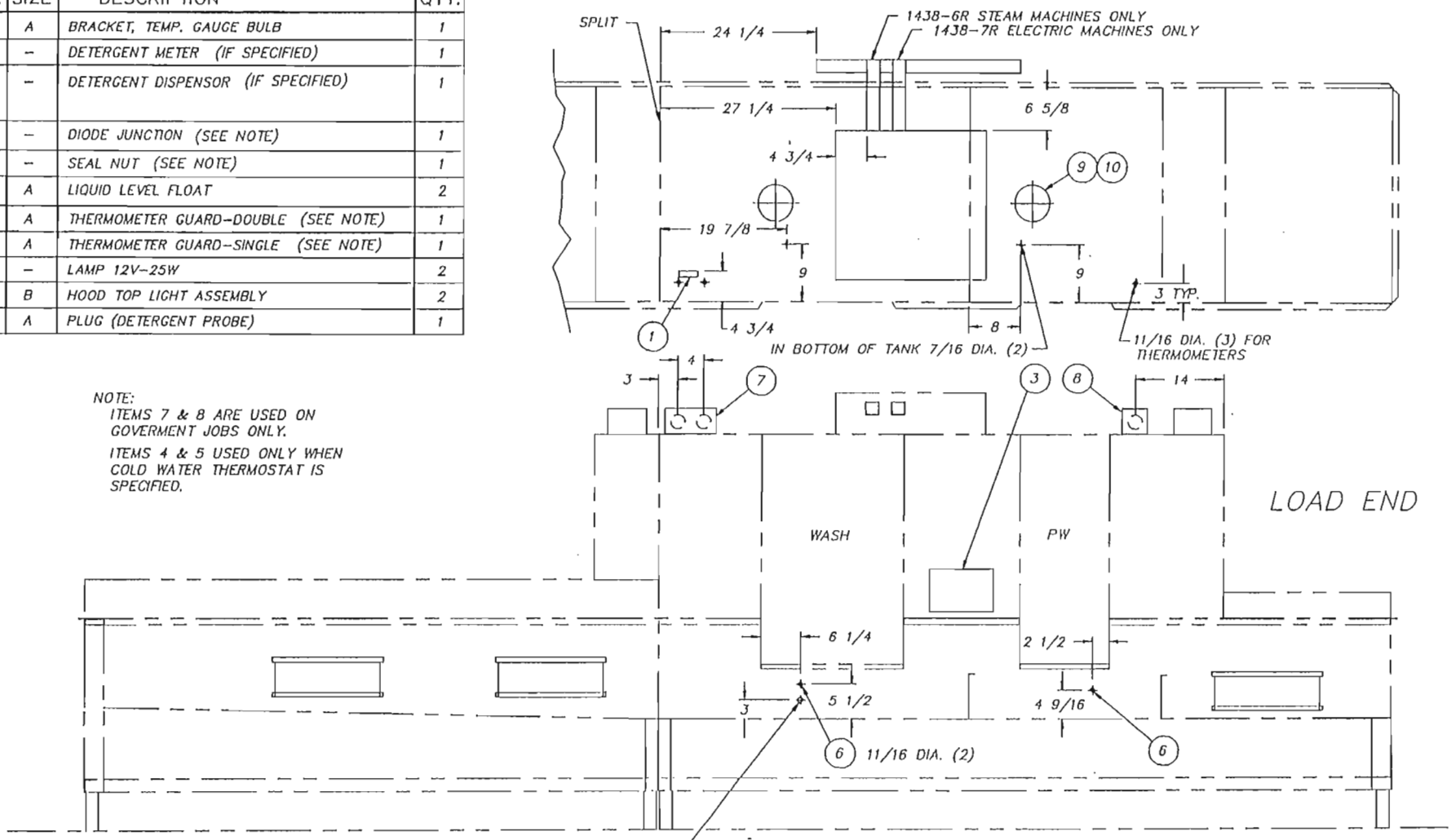

NOTE:
ITEMS 7 & 8 ARE USED ON GOVERMENT JOBS ONLY.
ITEMS 4 & 5 USED ONLY WHEN COLD WATER THERMOSTAT IS SPECIFIED.

FRONT VIEW OF MACHINE

(USE ITEM 11 IF DETERG. DISPENSER NOT SPECIFIED) 7/8 DIA. FOR DETERGENT PROBE (11)

R.H. MACHINE SHOWN

SHEET 2 OF 2

REV	ECN NO	DATE

FILE: PARTS\1462-78

TOLERANCES
FRACTIONS ±1/64
DECIMALS
.XXX ± .005
.XX ± .01
ANGLES ±1/2°
UNLESS OTHERWISE SPECIFIED

TITLE: ACCESSORY LOCATIONS

NEXT ASSY: REQ'D 1

DWG. NO.: 1462-78

MAT'L: NOTED

SCALE: 1=16

USED ON: DEFENDER

Insinger Machine Company
Philadelphia, PA 19135
(215) 624-4800
FAX (215) 624-6966

DRWN/DATE: PG 12.27.96

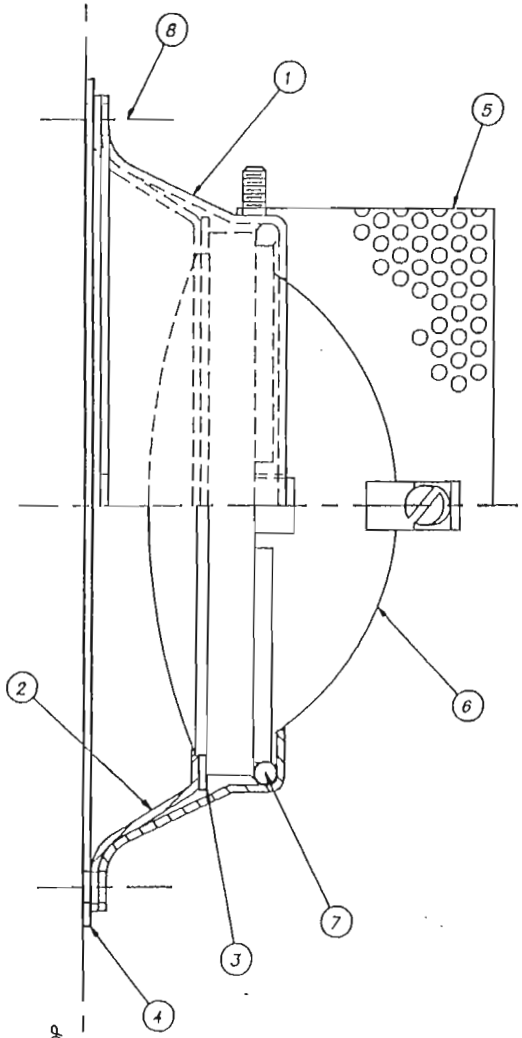

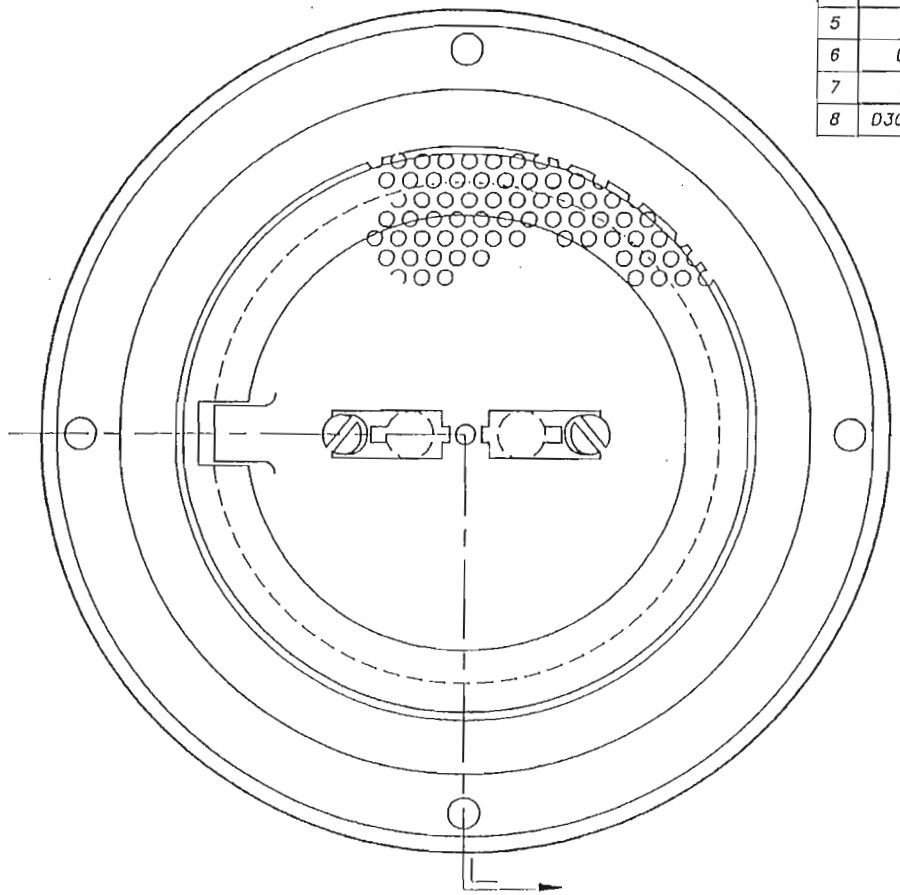

ITEM	PART NO.	DESCRIPTION	QTY.
1	1454-2	UPPER HOUSING	1
2	1454-3	LOWER HOUSING	1
3	1454-4	GASKET-LIGHT BULB	1
4	1454-5	GASKET-HOOD TOP	1
5	1454-8	COVER	1
6	DE9-217	#4446 EMERGENCY LAMP 12V-25W	1
7	D3-547	O-RING, 4 1/8 ID X 4 1/2 OD	1
8	D309C-EF-4G	#10-32 X 1/2 WELDSTUD	4

NOTES:

1) CUT 5 1/4 TO 5 1/2 DIA HOLE IN HOOD TOP AT EACH LAMP LOCATION
2) MASTER REQUIRES 3 LAMP ASSEMBLIES AS SHOWN. ONLY 1 ELECTRICAL CONTROL BOX IS REQUIRED.
3) STUD ITEM #5 TO ITEM #1
4) PUNCH ITEM #5 FOR 1/2" ELEC CONDUIT

SHEET 1 OF 2

REV	ECN NO	DATE

FILE: PARTS\1454-1

TOLERANCES
FRACTIONS ±1/64
DECIMALS
.XXX ± .005
.XX ± .01
ANGLES ±1/2°
UNLESS OTHERWISE SPECIFIED

TITLE ASSEMBLY-HOOD TOP LIGHT MECHANICAL COMPONENTS

NEXT ASSY —
REQ'D 1

DWG. NO. 1454-1

MAT'L SEE ABOVE

SCALE 1=1

USED ON MASTER/CLIP

Insinger Machine Company
Philadelphia, PA 19135
(215) 624-4800
FAX (215) 624-6866

DRWN/DATE CES 2.14.96

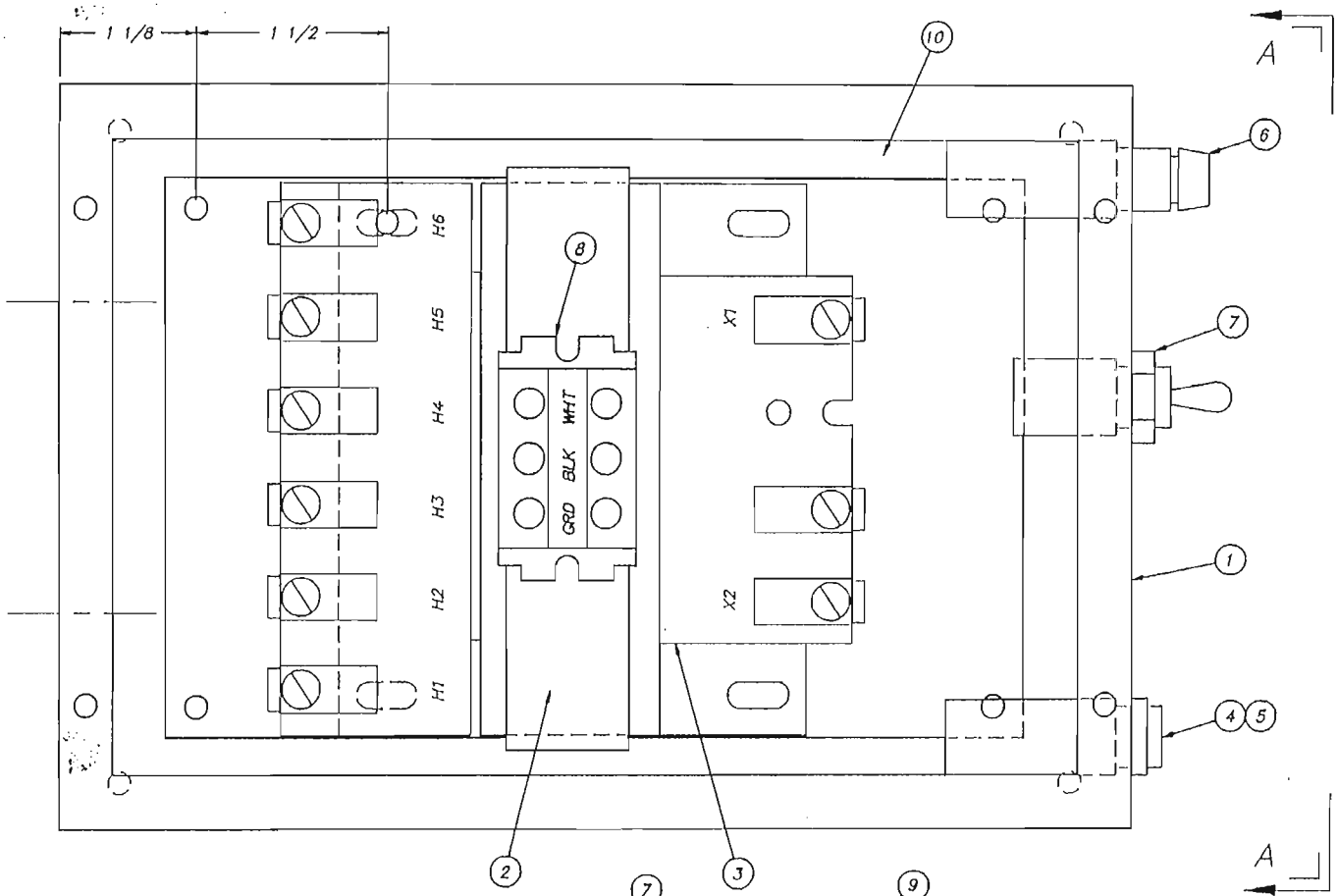

ITEM	PART NO.	DESCRIPTION	QTY.
1	1454-6	ELEC. ENCLOSURE	1
2	1454-7	MOUNTING STRAP	1
3	DE6-9	TRANSFORMER (150VA, 24VAC)	1
4	DE9-219	FUSEHOLDER HKP-HH	1
5	DE9-218	FUSE MDL-3.2	1
6	DE9-43	CIRCUIT BREAKER, 5A	1
7	DE5-8	TOGGLE SWITCH (4X846)	1
8	DE3-9	TERMINAL BLK ASSY	1
9	1454-9	TOP-ELEC. ENCL.	1
10	1454-10	PANEL-ELEC. ENCL.	1

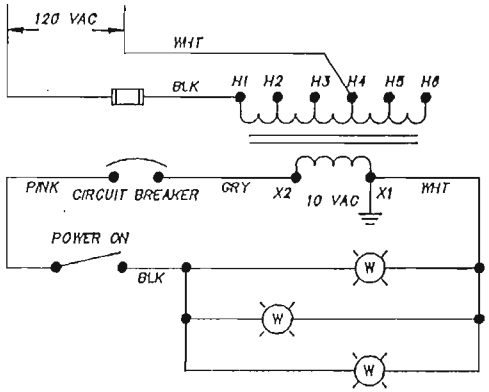

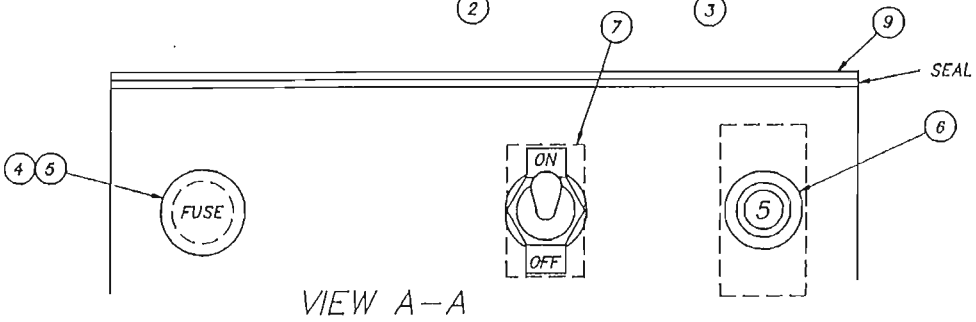

VIEW A-A

SHEET 2 OF 2

REV	ECN NO	DATE

FILE: PARTS\1454-1

TOLERANCES
FRACTIONS ±1/64
DECIMALS
.XXX ± .005
.XX ± .01
ANGLES ±1/2°
UNLESS OTHERWISE SPECIFIED

TITLE	ASEMBLY-HOOD TOP LIGHT ELECTRICAL COMPONENTS	NEXT ASSY / REQ'D 1	DWG. NO. 1454-1
MAT'L	SEE ABOVE	SCALE 1=1	USED ON MASTER/CLIP
Insinger Machine Company	Philadelphia, PA 19135 (215) 624-4800 FAX (215) 624-6866		DRWN/DATE CES 1.10.98

Insinger Machine Co.
6245 State Rd. Philadelphia, PA 19135
800.344.4802 | service@insingermachine.com
www.insingermachine.com