LCS ETL 2011 => ...

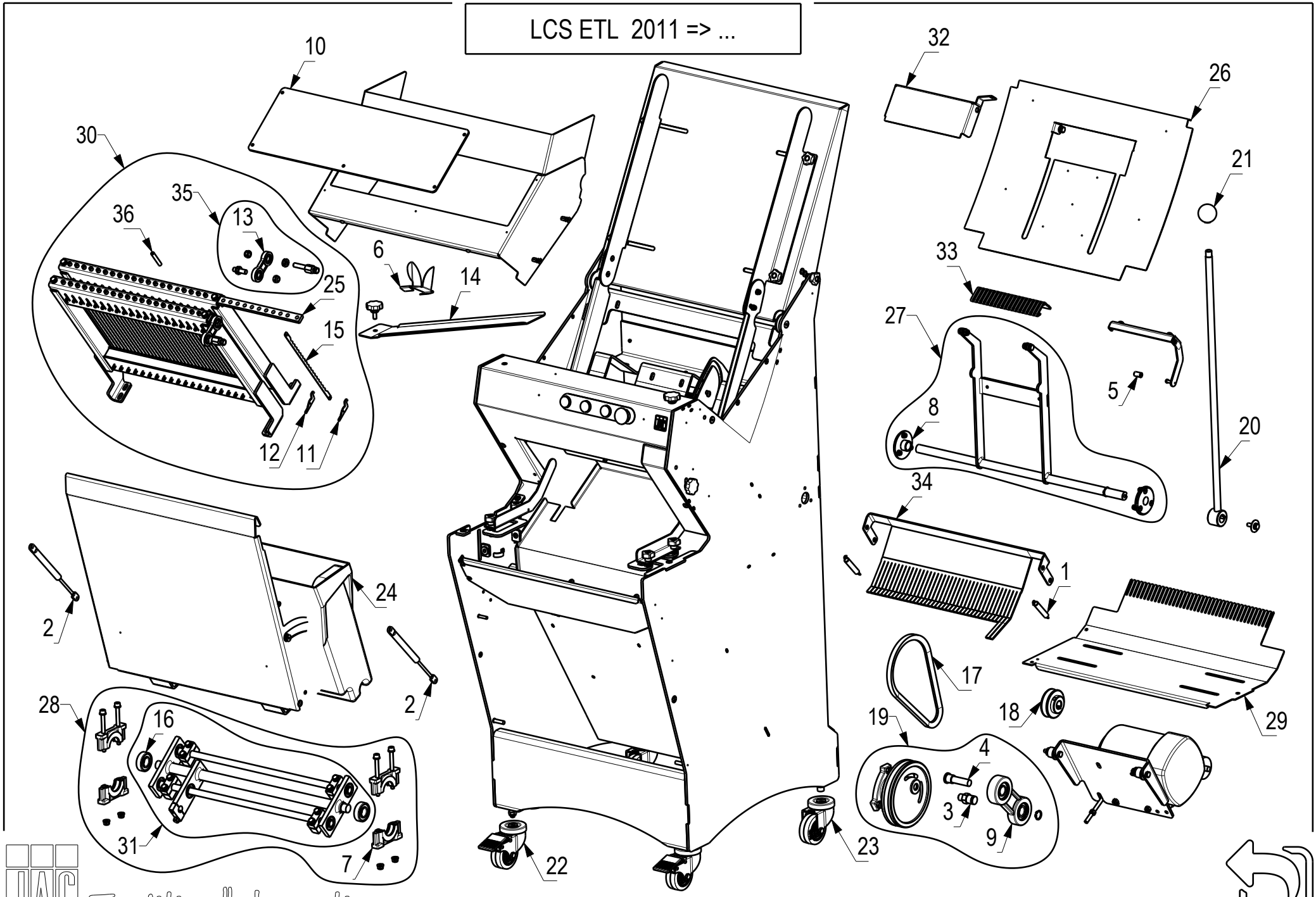

Traditionally Innovative

LCS ETL 2011 => ...

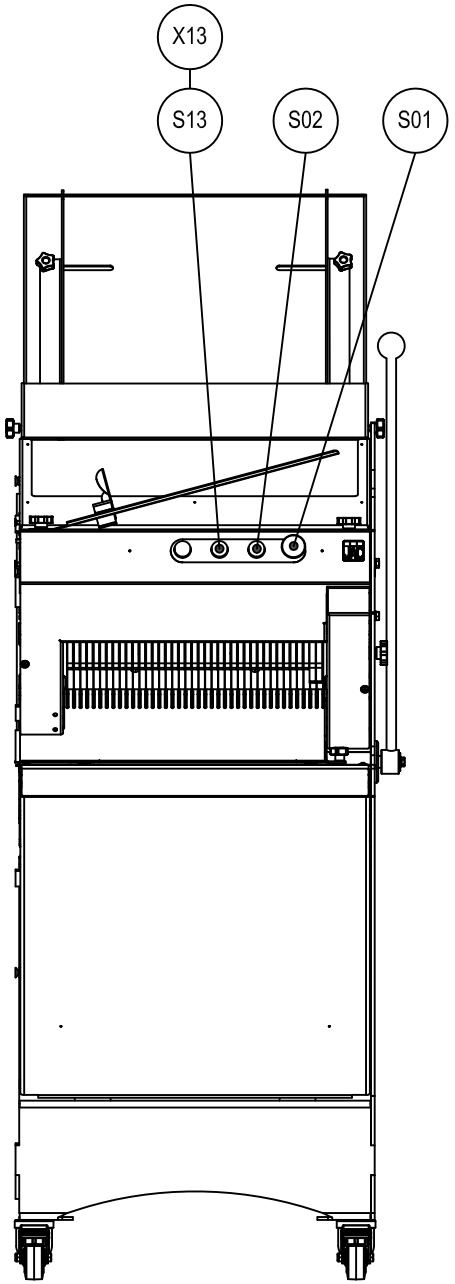

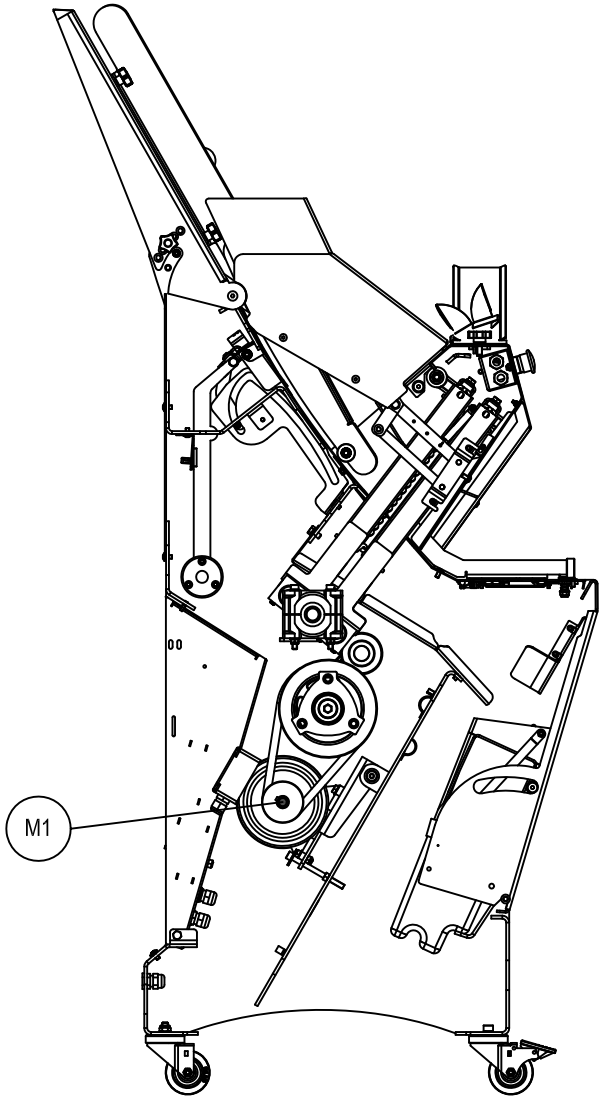

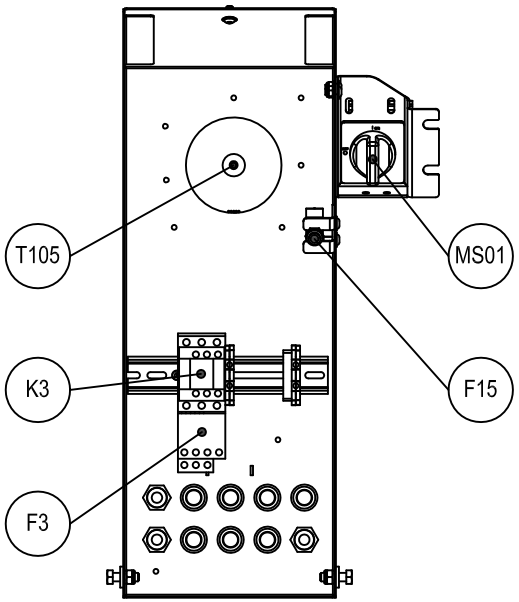

LCS ETL 2011 => ...

REP	QTE	N°	
1	2	5310019	
2	2	5315013	
3	1	5540018	
4	1	5540019	
5	1	5540030	
6	1	5590011	
7	4	5610003	
8	2	5610004	
9	1	5610005	
10	1	5690155	
11	96	5740067	
12	96	5740068	
13	2	5740162	
14	1	4-02041-450	
15	100	6110002	10 mm 0,5
15	100	6110001	13 mm 0,5
15	100	6110011	13 mm 0,5 + T
16	2	7210011	
17	1	7240031	
18	1	7260004	
19	1	7320001	
20	1	7380100	
21	1	7920001	
22	2	7930036	
23	2	7930037	
24	1	7940008	
25	2	3-00817-450	
26	1	3-01166	
27	1	3-01168-D	
28	1	3-01049	
29	1	BLCD016	
30	1	3-02004	
31	1	4-03149	
32	1	4-03312	
33	1	4-03317	
34	1	4-03320	
35	1	4-03748	
36	48	VO91301	

REP	QTE	N°	
F15	1	6720062	
F3	1	6430015	
K3	1	6330015	
M1	1	6620025	1~120V
MS01	1	6310054	
S01	1	6310007	
S02	1	6310073	
S13	1	6310072	
T105	1	6410022	
X13	1	6310072	