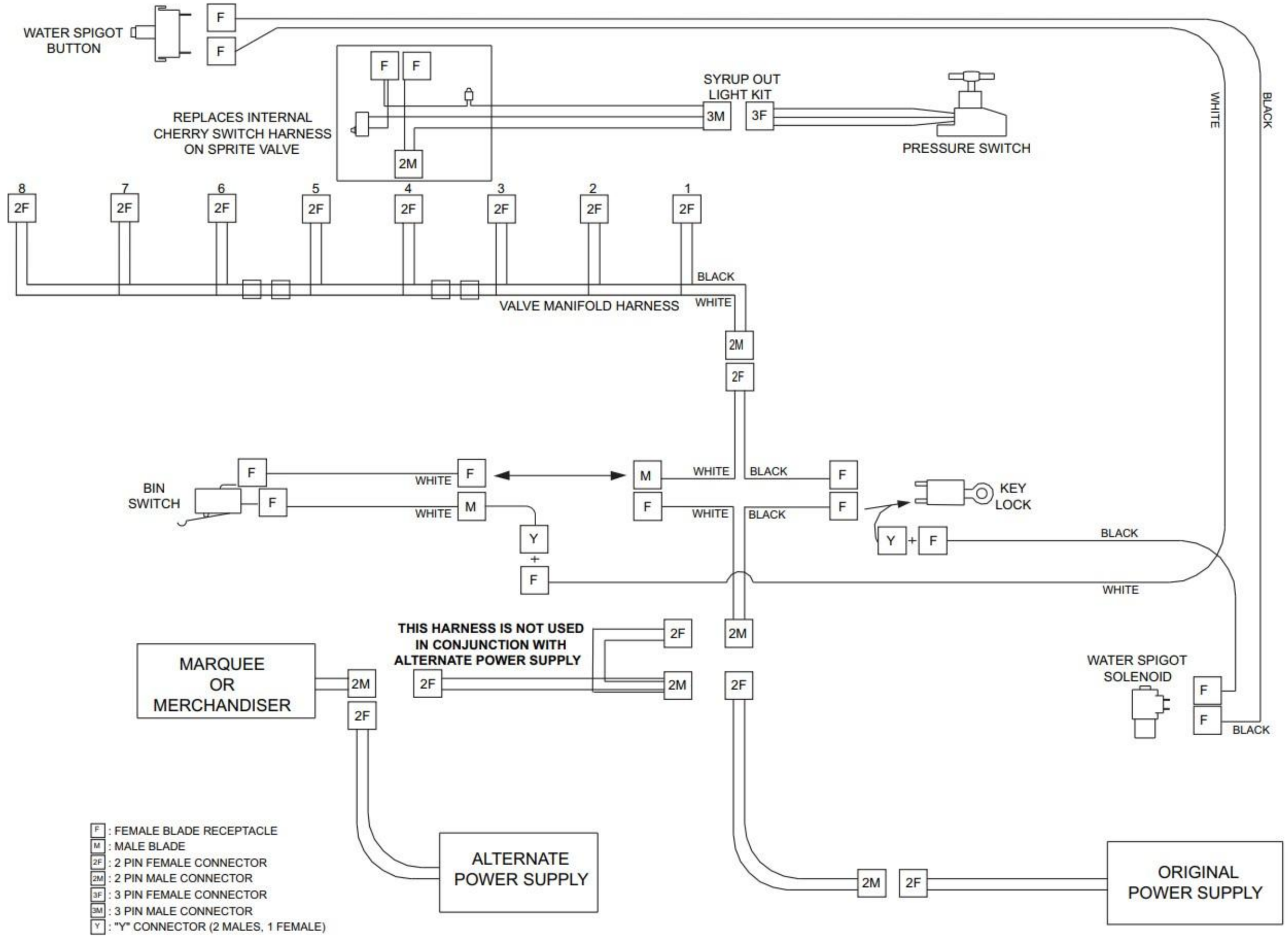
WATER SPIGOT BUTTON
F
F
REPLACES INTERNAL CHERRY SWITCH HARNESS ON SPRITE VALVE
F
F
2M
SYRUP OUT LIGHT KIT
3M
3F
PRESSURE SWITCH
WHITE
BLACK
8
7
6
5
4
3
2
1
2F
BLACK
VALVE MANIFOLD HARNESS
WHITE
2M
2F
BIN SWITCH
F
F
WHITE
WHITE
M
M
Y
+
F
M
F
WHITE
WHITE
BLACK
BLACK
F
F
KEY LOCK
Y
+
F
BLACK
WHITE
THIS HARNESS IS NOT USED IN CONJUNCTION WITH ALTERNATE POWER SUPPLY
2F
2M
2F
2M
2F
MARQUEE OR MERCHANDISER
2M
2F
WATER SPIGOT SOLENOID
F
F
BLACK
F : FEMALE BLADE RECEPTACLE
M : MALE BLADE
2F : 2 PIN FEMALE CONNECTOR
2M : 2 PIN MALE CONNECTOR
3F : 3 PIN FEMALE CONNECTOR
3M : 3 PIN MALE CONNECTOR
Y : "Y" CONNECTOR (2 MALES, 1 FEMALE)
ALTERNATE POWER SUPPLY
2M
2F
ORIGINAL POWER SUPPLY

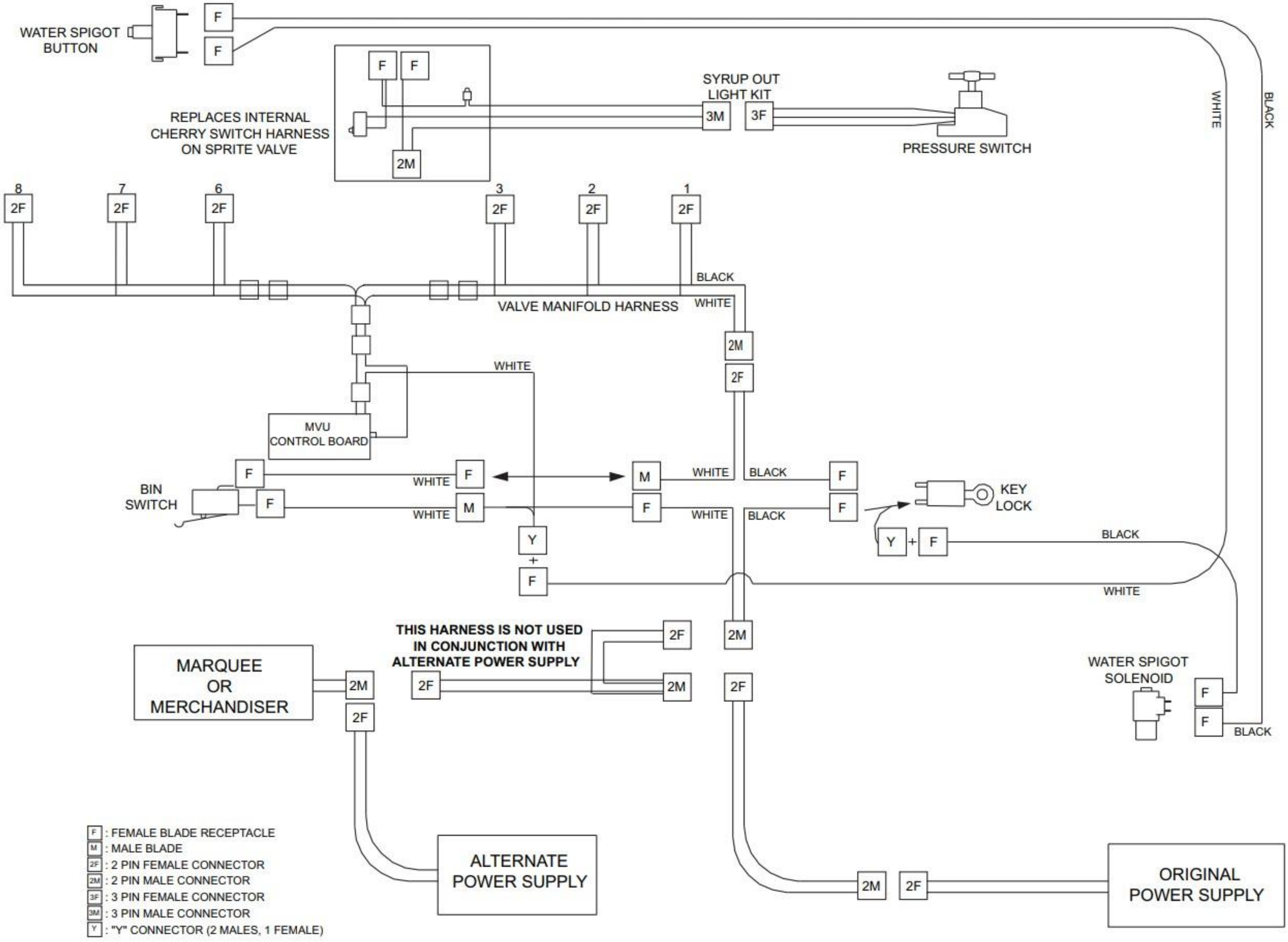
WATER SPIGOT BUTTON
F
F
REPLACES INTERNAL CHERRY SWITCH HARNESS ON SPRITE VALVE
F
F
2M
SYRUP OUT LIGHT KIT
3M
3F
PRESSURE SWITCH
WHITE
BLACK
8
2F
7
2F
6
2F
3
2F
2
2F
1
2F
BLACK
VALVE MANIFOLD HARNESS
WHITE
2M
2F
WHITE
MVU CONTROL BOARD
BIN SWITCH
F
F
WHITE
F
WHITE
M
M
WHITE
BLACK
F
F
WHITE
BLACK
F
KEY LOCK
Y
+
F
Y
+
F
BLACK
WHITE
THIS HARNESS IS NOT USED IN CONJUNCTION WITH ALTERNATE POWER SUPPLY
2F
2M
2F
2M
2F
MARQUEE OR MERCHANDISER
2M
2F
WATER SPIGOT SOLENOID
F
F
BLACK
F : FEMALE BLADE RECEPTACLE
M : MALE BLADE
2F : 2 PIN FEMALE CONNECTOR
2M : 2 PIN MALE CONNECTOR
3F : 3 PIN FEMALE CONNECTOR
3M : 3 PIN MALE CONNECTOR
Y : "Y" CONNECTOR (2 MALES, 1 FEMALE)
ALTERNATE POWER SUPPLY
2M
2F
ORIGINAL POWER SUPPLY