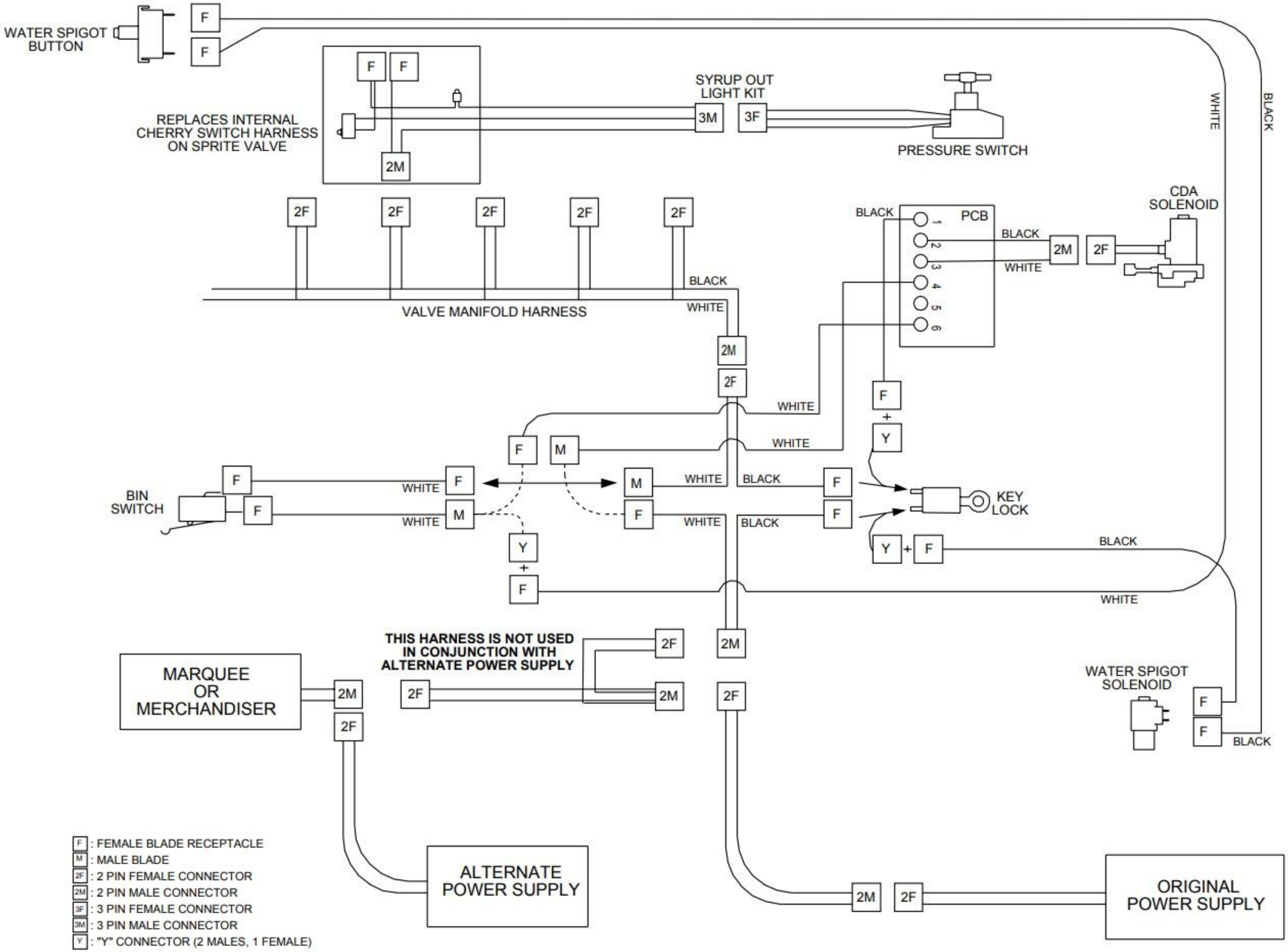
WATER SPIGOT BUTTON
F
F
REPLACES INTERNAL CHERRY SWITCH HARNESS ON SPRITE VALVE
F
F
2M
SYRUP OUT LIGHT KIT
3M
3F
PRESSURE SWITCH
WHITE
BLACK
2F
2F
2F
2F
2F
VALVE MANIFOLD HARNESS
BLACK
WHITE
2M
2F
BLACK
PCB
1
2
3
4
5
6
BLACK
WHITE
2M
2F
CDA SOLENOID
WHITE
WHITE
F
+
Y
F
M
WHITE
BIN SWITCH
F
F
WHITE
WHITE
F
M
M
F
WHITE
WHITE
BLACK
BLACK
F
F
KEY LOCK
Y
+
F
BLACK
Y
+
F
WHITE
THIS HARNESS IS NOT USED IN CONJUNCTION WITH ALTERNATE POWER SUPPLY
2F
2M
2F
2M
2F
MARQUEE OR MERCHANDISER
2M
2F
WATER SPIGOT SOLENOID
F
F
BLACK
ALTERNATE POWER SUPPLY
2M
2F
ORIGINAL POWER SUPPLY
F : FEMALE BLADE RECEPTACLE
M : MALE BLADE
2F : 2 PIN FEMALE CONNECTOR
2M : 2 PIN MALE CONNECTOR
3F : 3 PIN FEMALE CONNECTOR
3M : 3 PIN MALE CONNECTOR
Y : "Y" CONNECTOR (2 MALES, 1 FEMALE)

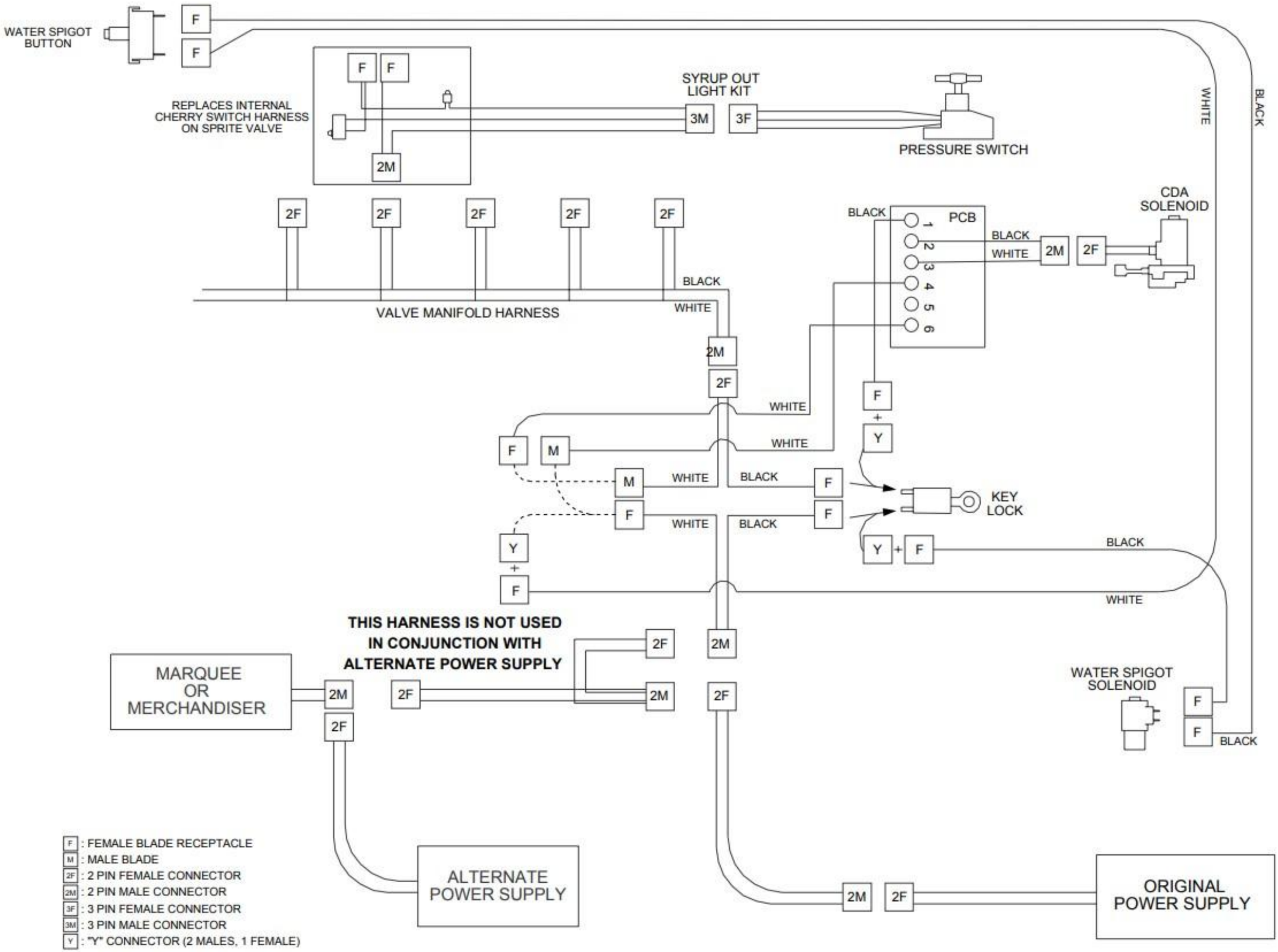
WATER SPIGOT BUTTON
F
F
REPLACES INTERNAL CHERRY SWITCH HARNESS ON SPRITE VALVE
F
F
2M
SYRUP OUT LIGHT KIT
3M
3F
PRESSURE SWITCH
WHITE
BLACK
2F
2F
2F
2F
2F
VALVE MANIFOLD HARNESS
BLACK
WHITE
2M
2F
BLACK
PCB
1
2
3
4
5
6
BLACK
WHITE
2M
2F
CDA SOLENOID
F
Y
WHITE
WHITE
F
M
M
WHITE
BLACK
F
F
WHITE
BLACK
F
KEY LOCK
Y
F
Y
+
F
BLACK
WHITE
THIS HARNESS IS NOT USED IN CONJUNCTION WITH ALTERNATE POWER SUPPLY
2F
2M
MARQUEE OR MERCHANDISER
2M
2F
2M
2F
2F
WATER SPIGOT SOLENOID
F
F
BLACK
ALTERNATE POWER SUPPLY
2M
2F
ORIGINAL POWER SUPPLY
F : FEMALE BLADE RECEPTACLE
M : MALE BLADE
2F : 2 PIN FEMALE CONNECTOR
2M : 2 PIN MALE CONNECTOR
3F : 3 PIN FEMALE CONNECTOR
3M : 3 PIN MALE CONNECTOR
Y : "Y" CONNECTOR (2 MALES, 1 FEMALE)