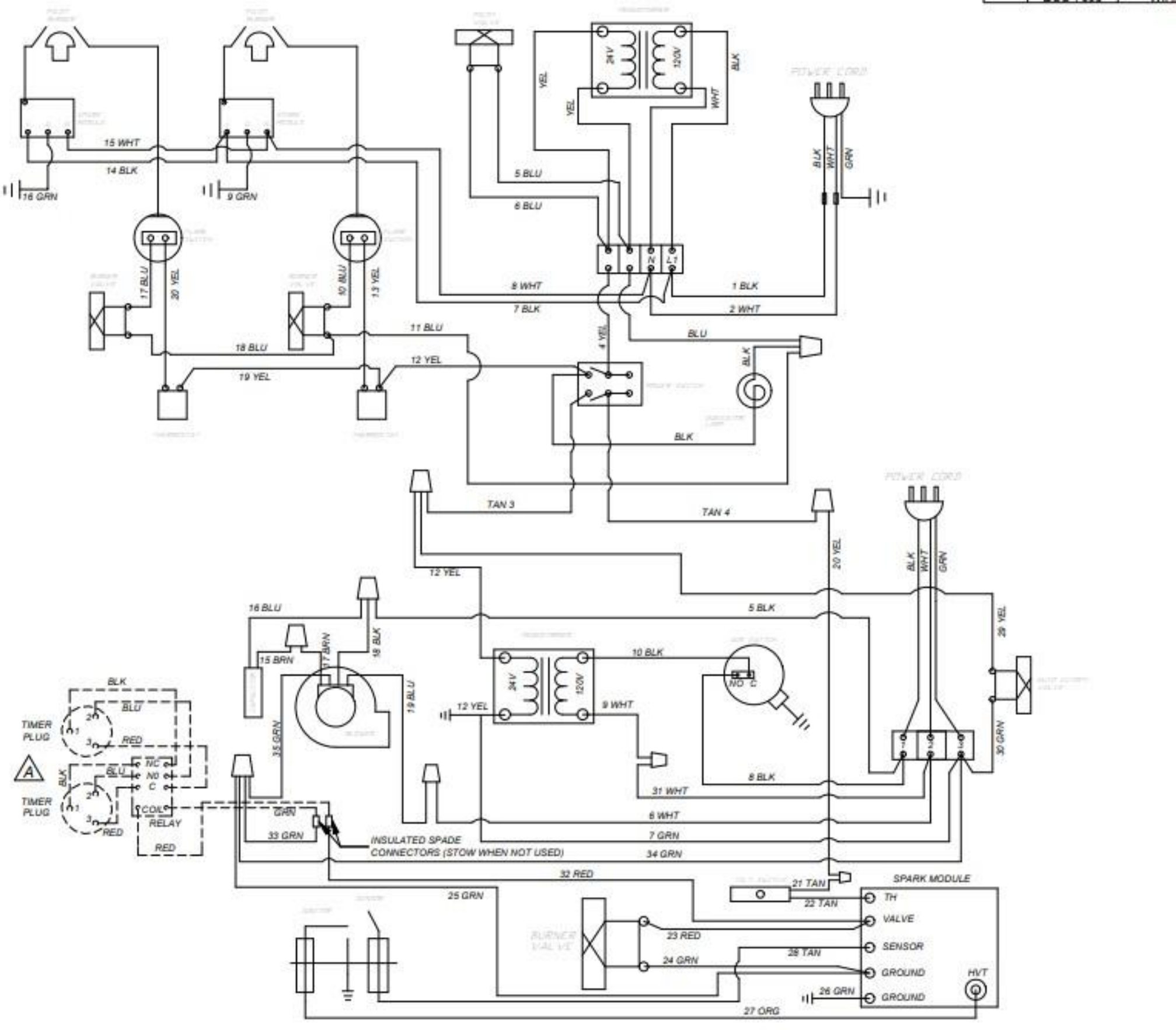
15 WHT
14 BLK
16 GRN
9 GRN
17 BLU
20 YEL
10 BLU
13 YEL
18 BLU
19 YEL
11 BLU
12 YEL
24V
120V
YEL
YEL
BLK
WHT
5 BLU
6 BLU
N
L1
8 WHT
7 BLK
1 BLK
2 WHT
BLU
4 YEL
BLK
BLK
BLK
WHT
GRN
TAN 3
TAN 4
12 YEL
20 YEL
16 BLU
5 BLK
29 YEL
15 BRN
17 BRN
18 BLK
19 BLU
10 BLK
NO
C
12 YEL
9 WHT
35 GRN
8 BLK
30 GRN
31 WHT
6 WHT
7 GRN
34 GRN
BLK
BLU
TIMER PLUG
RED
A
BLK
BLU
NC
NO
C
COIL
RELAY
TIMER PLUG
RED
GRN
33 GRN
INSULATED SPADE CONNECTORS (STOW WHEN NOT USED)
RED
32 RED
25 GRN
21 TAN
22 TAN
SPARK MODULE
TH
VALVE
SENSOR
GROUND
GROUND
HVT
23 RED
24 GRN
28 TAN
26 GRN
27 ORG

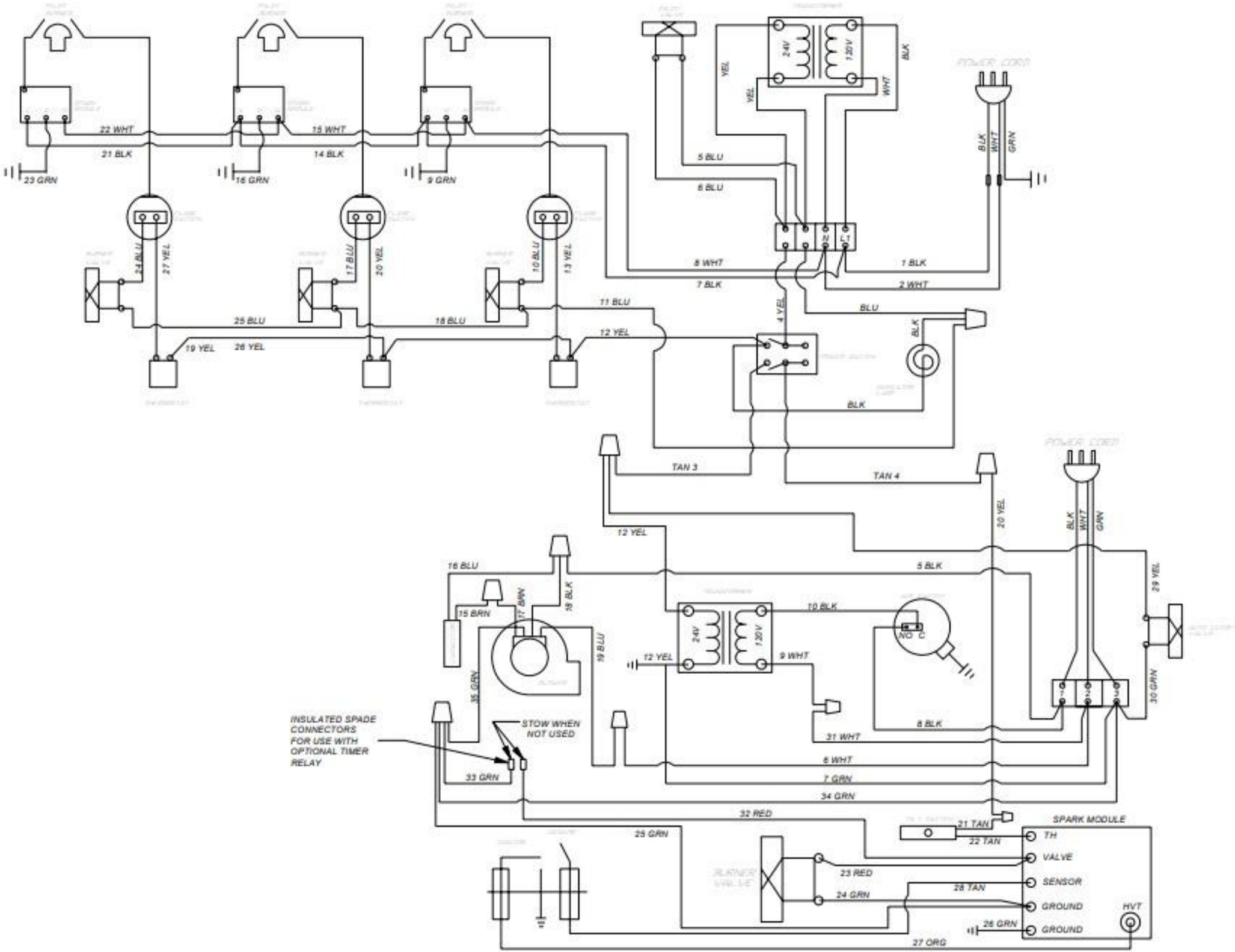
22 WHT
21 BLK
23 GRN
15 WHT
14 BLK
16 GRN
9 GRN
24 BLU
27 YEL
17 BLU
20 YEL
10 BLU
13 YEL
25 BLU
18 BLU
19 YEL
26 YEL
11 BLU
12 YEL
24V
120V
YEL
BLK
WHT
5 BLU
6 BLU
8 WHT
7 BLK
N
L1
1 BLK
2 WHT
BLU
4 YEL
BLK
GRN
TAN 3
TAN 4
20 YEL
29 YEL
30 GRN
16 BLU
15 BRN
17 BRN
18 BLK
19 BLU
35 GRN
5 BLK
10 BLK
NO
C
9 WHT
8 BLK
31 WHT
6 WHT
7 GRN
34 GRN
32 RED
25 GRN
33 GRN
INSULATED SPADE CONNECTORS FOR USE WITH OPTIONAL TIMER RELAY
STOW WHEN NOT USED
21 TAN
22 TAN
23 RED
24 GRN
28 TAN
26 GRN
27 ORG
SPARK MODULE
TH
VALVE
SENSOR
GROUND
GROUND
HVT

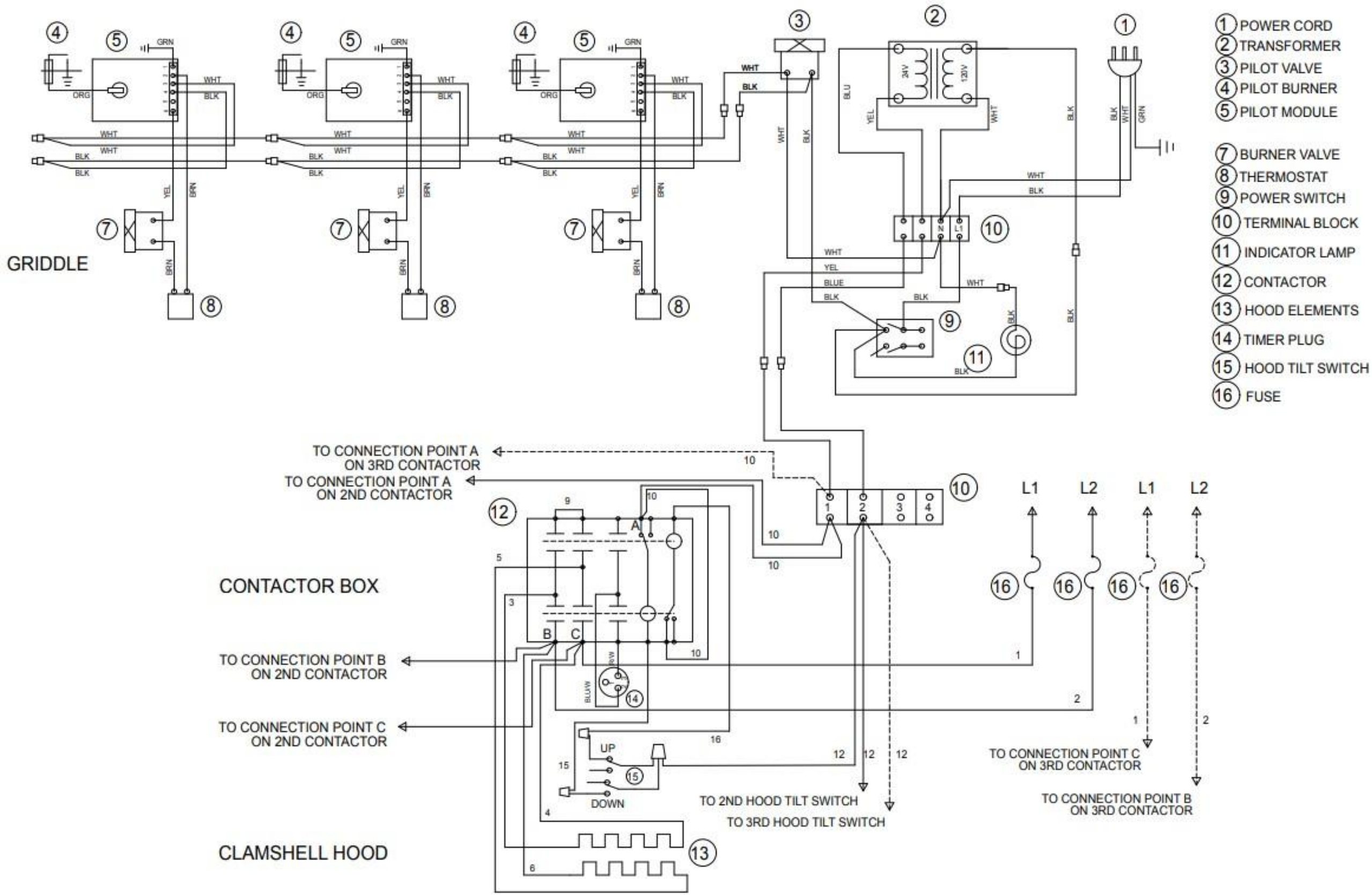
GRIDDLE
CONTACTOR BOX
CLAMSHELL HOOD
TO CONNECTION POINT A ON 3RD CONTACTOR
TO CONNECTION POINT A ON 2ND CONTACTOR
TO CONNECTION POINT B ON 2ND CONTACTOR
TO CONNECTION POINT C ON 2ND CONTACTOR
TO CONNECTION POINT C ON 3RD CONTACTOR
TO CONNECTION POINT B ON 3RD CONTACTOR
TO 2ND HOOD TILT SWITCH
TO 3RD HOOD TILT SWITCH
UP
DOWN
L1
L2
1 POWER CORD
2 TRANSFORMER
3 PILOT VALVE
4 PILOT BURNER
5 PILOT MODULE
7 BURNER VALVE
8 THERMOSTAT
9 POWER SWITCH
10 TERMINAL BLOCK
11 INDICATOR LAMP
12 CONTACTOR
13 HOOD ELEMENTS
14 TIMER PLUG
15 HOOD TILT SWITCH
16 FUSE