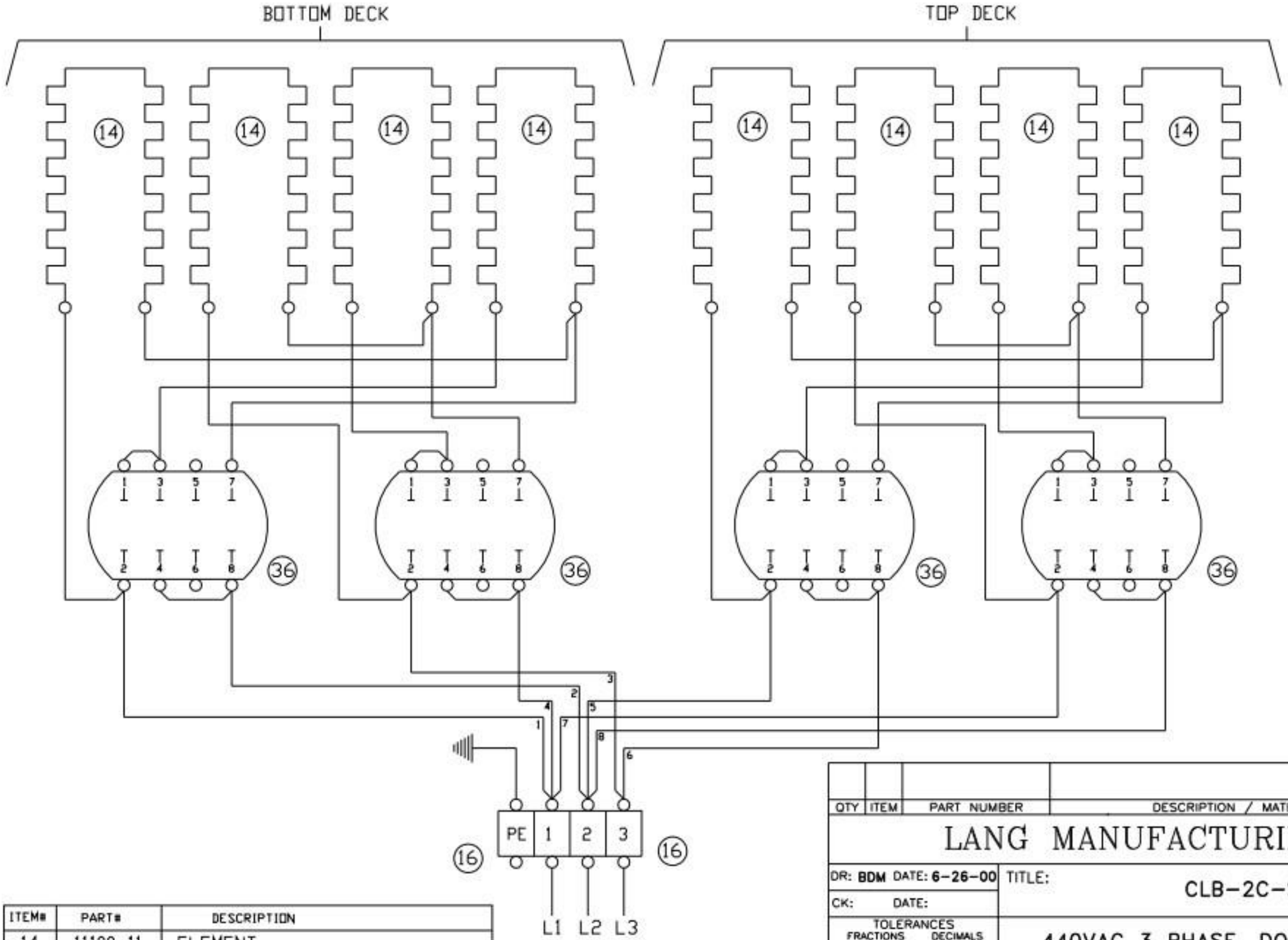

ITEM#	PART#	DESCRIPTION
14	11100-11	ELEMENT
16	30500-11	LARGE 2 POLE TERMINAL BLOCK
36	30304-32	2 HEAT SWITCH - 25 AMP

QTY	ITEM	PART NUMBER	DESCRIPTION / MATERIAL

LANG MANUFACTURING

DR: BDM DATE: 6-26-00

CK: DATE:

TOLERANCES
FRACTIONS ± 1/64
ANGLES ± .5°
DECIMALS .X ± .05, .XX ± .03, .XXX ± .015
UNLESS OTHERWISE SPECIFIED DIMENSIONS ARE IN INCHES

SCALE: TO FIT

TITLE: CLB-2C-S

440VAC 3 PHASE, DOUBLE BROILER

NEXT HIGHER ASSY.	SHEET	DRAWING NUMBER	REV
	1 OF 1	61131-06	A