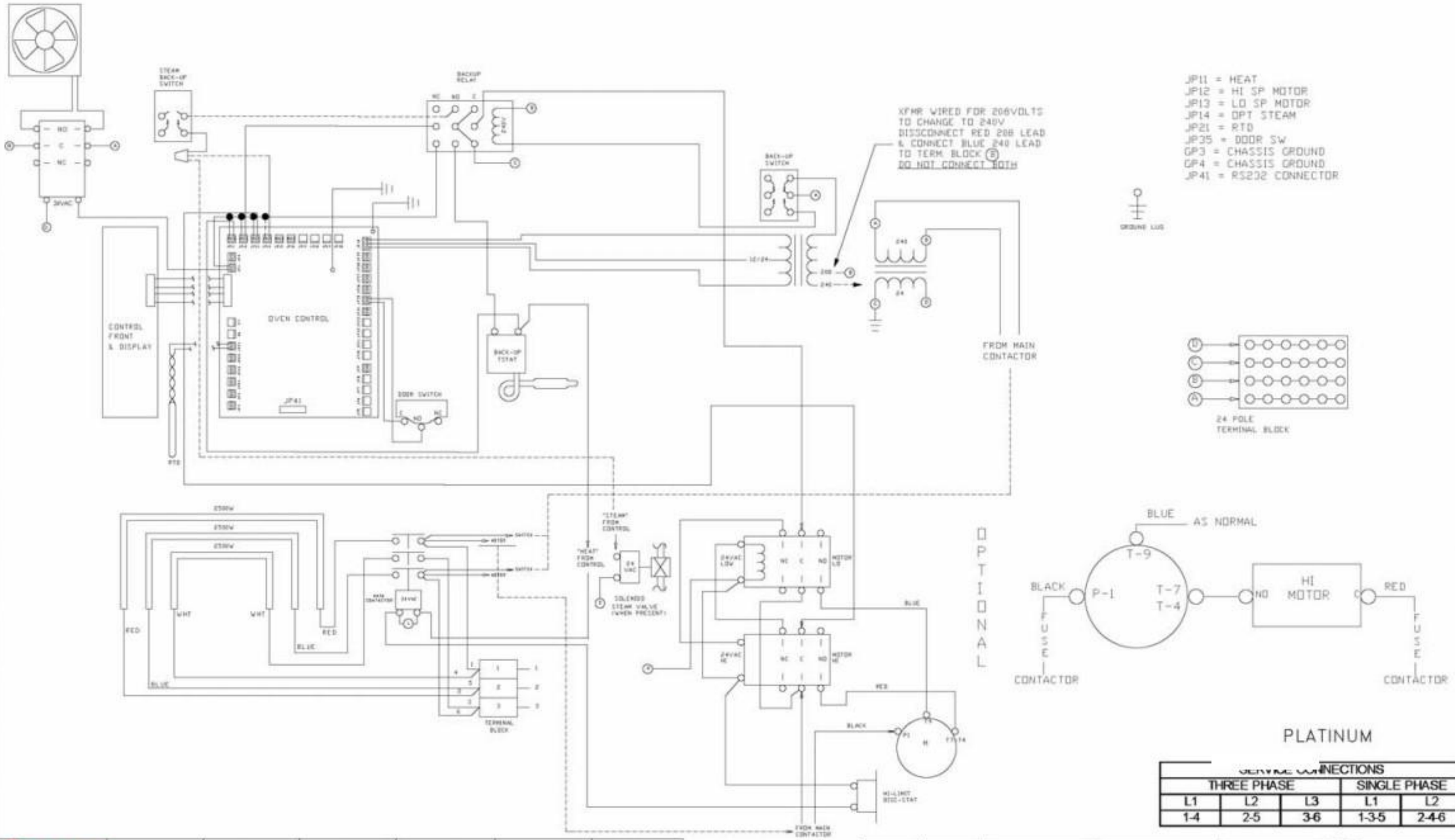


| SERVICE CONNECTIONS | | | | |
|---|---|---|---|---|
| THREE PHASE | | | SINGLE PHASE | |
| L1 | L2 | L3 | L1 | L2 |
| 1-4 | 2-5 | 3-6 | 1-3-5 | 2-4-6 |

| | | | | | | | | | |
|---|---|---|---|---|---|---|---|---|---|
| | VOLTS | Kw | | | | AMPS | | | |
| | | L1-L2 | L2-L3 | L3-L1 | TOTAL | L1 | L2 | L3 | 1 PHASE |
| EH | 208 | 2.5 | 2.5 | 3.1 | 8.1 | 23.3 | 20.8 | 23.3 | 40.0 |
| EH | 240 | 2.5 | 2.5 | 3.1 | 8.1 | 20.2 | 18.0 | 20.2 | 33.8 |

Lang Manufacturing Company

DWN. BY: DLG | DWN. DATE 11-18-03 | REV. BY: | REV. DATE: | CHK. BY: | CHK. DATE:

DESCRIPTION: W/D EH PT WITH 2 SPEED MOTOR 208-240VAC

CAD FILE: FROM ACAD | DWG. NO: 61111-148 | SHEET 1 OF 1 | REV: C

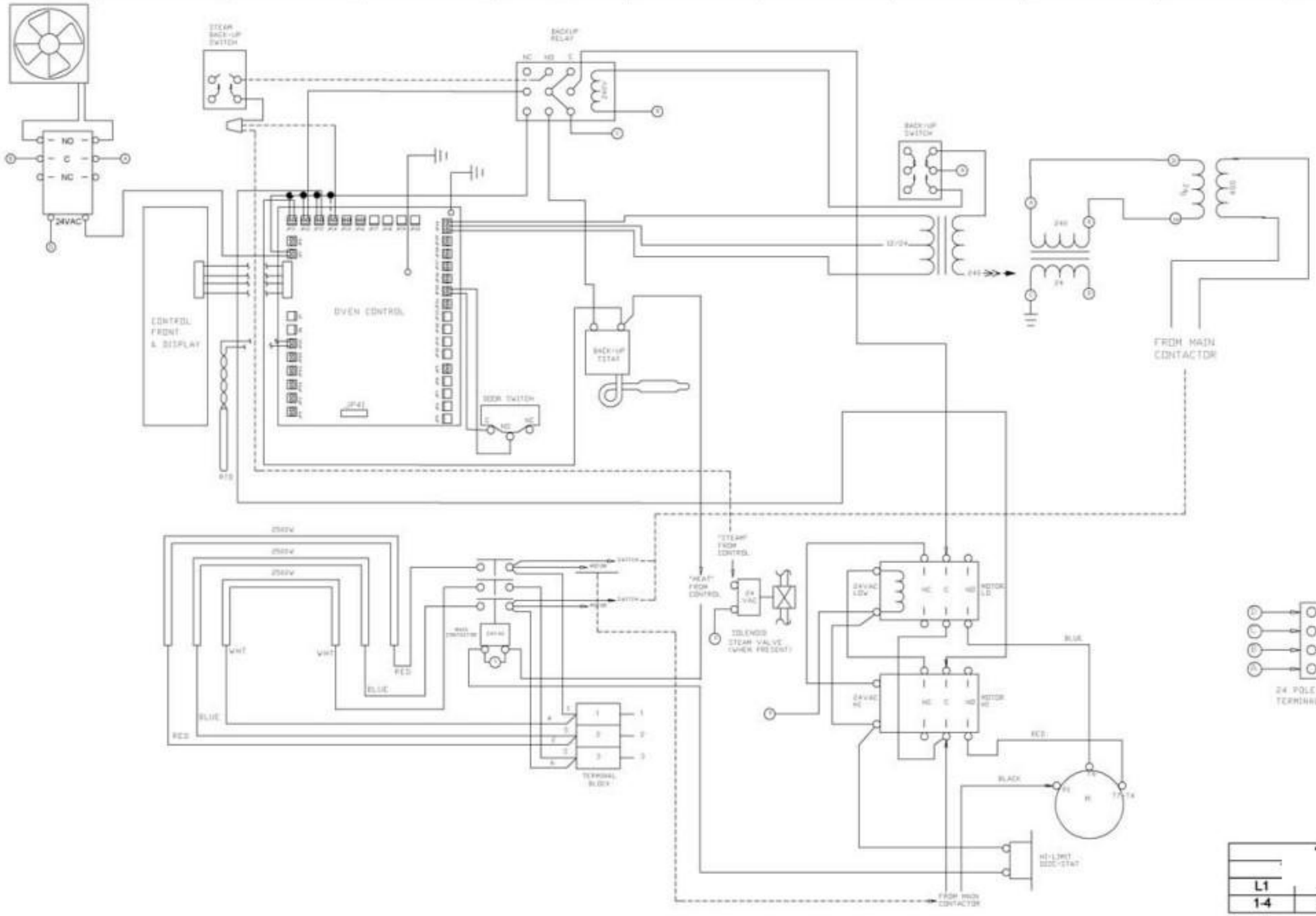


JP11 = HEAT
JP12 = HI SP MOTOR
JP13 = LO SP MOTOR
JP14 = DPT STEAM
JP21 = RTD
JP35 = DOOR SW
JP37 = ON-OFF
GP3 = CHASSIS GROUND
GP4 = CHASSIS GROUND
JP41 = RS232 CONNECTOR

GROUND LUG

24 POLE TERMINAL BLOCK

PURPLE–PLUS

| SERVICE CONNECTIONS | | | | |
|---|---|---|---|---|
| | | | SINGLE PHASE | |
| L1 | L2 | L3 | L1L | L2 |
| 1-4 | 2-5 | 3-6 | 1-3-5 | 2-4-6 |

| | VOLTS | Kw | | | | AMPS | | | |
|---|---|---|---|---|---|---|---|---|---|
| | | L1-L2 | L2-L3 | L3-L1 | TOTAL | L1 | L2 | L3 | 1 PHASE |
| EH | 480 | 2.5 | 2.5 | 3.1 | 8.1 | 6.0 | 6.0 | 6.7 | 9.8 |

Lang Manufacturing Company

DWN. BY: DLG | DWN. DATE: 11-24-03 | REV. BY: | REV. DATE: | CHK. BY: | CHK. DATE:

DESCRIPTION: W/D EH PT 480V - MOTOR 480VAC

CAD FILE: FROM ACAD | DWG. NO: 61111-169 | SHEET 1 OF 1 | REV: B

| REVISION BLOCK | | | | | | |
|---|---|---|---|---|---|---|
| REV | ECN NO. | DESCRIPTION | DR: | MFG | ENG | DATE |
| C | | ADDED SAFETY CONTACTOR | BJM | | | 1-18-99 |
| D | | REMOVED CE COMPONENTS | DLG | | | 5-30-02 |

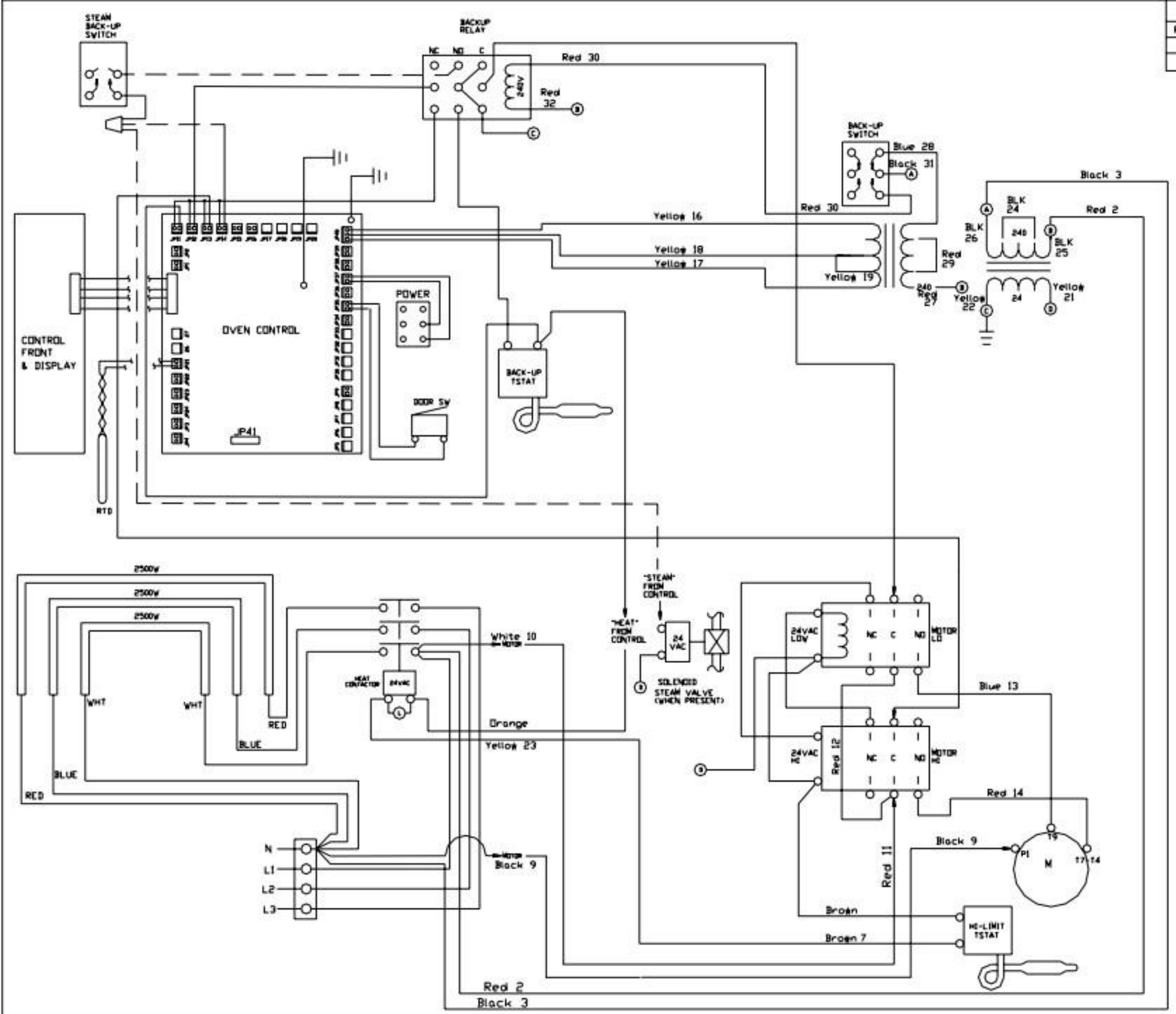


JP11 = HEAT
JP12 = HI SP MOTOR
JP13 = LO SP MOTOR
JP14 = OPT STEAM
JP21 = RTD
JP35 = DOOR SW
JP37 = ON-OFF
GP3 = CHASSIS GROUND
GP4 = CHASSIS GROUND
JP41 = RS232 CONNECTOR

GROUND LUG

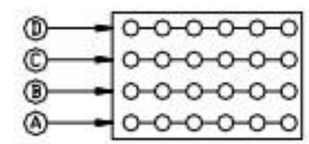


24 POLE TERMINAL BLOCK

Three Phase

| VOLTS | KW | | | | AMPS | | | |
|---|---|---|---|---|---|---|---|---|
| | L1-N | L2-N | L3-N | TOTAL | L1 | L2 | L3 | N |
| 220/380 | 2.8 | 2.1 | 2.1 | 7.0 | 12.7 | 9.5 | 9.5 | 12.7 |
| 240/415 | 3.2 | 2.5 | 2.5 | 8.2 | 13.3 | 10.4 | 10.4 | 13.3 |

PLATINUM

| QTY | ITEM | PART NUMBER | DESCRIPTION / MATERIAL |
|---|---|---|---|

LANG MANUFACTURING

DR: BDN DATE: 10-6-98
CK: DC DATE: 10-20-98

TOLERANCES
FRACTIONS ± 1/64
DECIMALS X ± .05 XX ± .03 XXX ± .005
ANGLES ± 5°
UNLESS OTHERWISE SPECIFIED DIMENSIONS ARE IN INCHES

SCALE: TO FIT

TITLE: W/D EH PP WITH 2 SPEED

220/380 & 240/415 VAC

| NEXT HIGHER ASSY. | SHEET | DRAWING NUMBER | REV |
|---|---|---|---|
| | 1 OF 1 | 61111-152 | D |