Manitowoc

SELF CONTAINED AO100 SERIES ICE CUBER SERVICE MANUAL

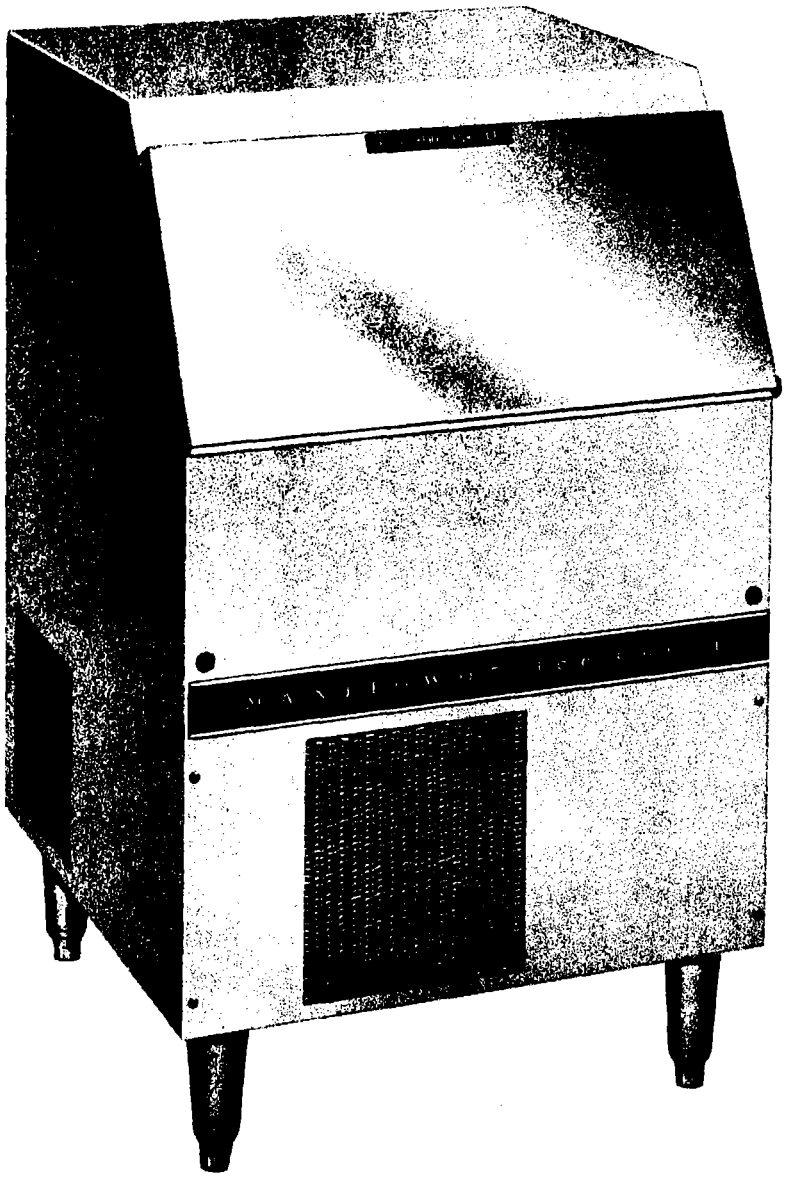

Manitowoc equipment works MANITOWOC WISCONSIN

Division of The Manitowoc Company, Inc.

80-0042-1
Sept. 1979

TABLE OF CONTENTS

Uncrating and Inspection ..... Page 2
Location ..... Page 2
Setting Up Ice Cuber ..... Page 2
Serial and Electrical Plate ..... Page 2
Removing Lower Front Panel ..... Page 2
Removing Top Cover ..... Page 2
Removing Rear Panel ..... Page 3
Electrical Connections ..... Page 3
General Requirements ..... Page 3
Connecting Power Supply ..... Page 3
Water Supply ..... Page 3
Connecting Water Supply ..... Page 3
Drain Connections ..... Page 3
Leveling Ice Cuber ..... Page 4
Final Check List ..... Page 4
Starting Cuber ..... Page 4
Freeze and Harvest Control ..... Pages 4-5
High Pressure Control ..... Page 5
Toggle Switch ..... Page 5
Low Pressure Cut-in Control ..... Page 5
Water Pump ..... Page 5
Hot Gas Solenoid Valve ..... Page 5
Thermo-Disc ..... Page 5
Bin Control ..... Page 5
Setting Timer ..... Page 6
Solid State Timer ..... Page 6
Fig. 1 — Cuber in Position ..... Page 7
Fig. 2 — Front View of Compressor Compartment ..... Page 8
Fig. 3 — Top View ..... Page 9
Fig. 4 — Rear View ..... Page 10
Fig. 5 — Air Cooled Compressor Assy. ..... Page 11
Fig. 6 — Water Cooled Compressor Assy. ..... Page 12
Fig. 7 — Rear View with Rear Panel in Place ..... Page 13
General Specifications ..... Pages 14-15
Fig. 8 — Installation Dimensions ..... Page 16
Fig. 9 — Bin Control Adjustment ..... Page 17
Fig. 10 — Solid State Timer Adjustment ..... Page 18
Service Analysis ..... Pages 19-20
Specifications — 60 Cycle ..... Page 21
Fig. 11 — Wiring Diagram ..... Page 22
Cleaning Instructions ..... Page 23
Service and Parts Procedure ..... Pages 24-25
Warranty ..... Page 26

FORWARD

Manitowoc Equipment Works, Division of the Manitowoc Company, Inc., Manitowoc, Wisconsin, presents this Service Manual to assist the service man with information concerning CONSTRUCTION, INSTALLATION, and MAINTENANCE of the MANITOWOC ICE MAKER.

The problems of the user and the service man have been given special emphasis in the development of the latest MANITOWOC Ice Machines.

If you encounter a problem which is not answered by this manual, please feel free to write or call the Service Department of the Manitowoc Equipment Works, Division of The Manitowoc Company, Inc., Manitowoc, Wisconsin, describing the problem you have encountered. The Service Department will be happy to give you particularized advice and assistance. Whenever calling or writing, please state the complete model and serial number of the ice making equipment.

MANITOWOC EQUIPMENT WORKS
Div. of THE MANITOWOC CO., INC.
2110 South 26th Street
Manitowoc, Wisconsin 54220
(414) 682-0161

MODELS

This manual includes the following models:

AR 0100A — Regular Cube; Air Cooled
AR 0101W — Regular Cube; Water Cooled
AD 0102A — Dice Cube; Air Cooled
AD 0103W — Dice Cube; Water Cooled
AY 0104A — Half Dice Cuber; Air Cooled
AY 0105W — Half Dice Cuber; Water Cooled

WARRANTY

Parts and Material	One year — parts only
Compressor	Five years — parts only

Defective parts must be returned transportation prepaid.

(See "Ice Machine and Bin Warranty" page 26 and registration card shipped with the unit for warranty conditions.)

UNCRATING & INSPECTION

The AO100 Series ice cubers are shipped in a corrugated carton. To uncrate, cut the banding strap at the bottom of the carton and remove outer carton by lifting up and off. Inspect the ice cuber for possible concealed freight damage. If any damage exists, notify delivering carrier immediately and file a concealed damage claim with the carrier.

To remove the skid remove the carton bottom pad and the four skid bolts holding skid to ice cuber.

LOCATION

The Model AO100 ice cuber was designed to be installed anywhere — ideally suited for installation under bars. For maximum efficiency pick a location away from sources of heat like radiators, ovens, other refrigeration condensing units, direct sunlight, etc. Provide space around the cabinet for air circulation. Air cooled models require a minimum of 4 inches at any louvered opening to and from the compressor compartment. Cabinets located in unheated areas must be protected from freezing or shut down and drained.

Provide plumbing and electrical connections so the unit can be moved out where the rear panel can be removed and unit still be operated.

Kitchen installations as a rule are not the most practical place to install an air cooled condensing unit, as grease is almost always present and makes cleaning of the condenser unit difficult.

If installed in a storeroom be sure it is of adequate size and properly ventilated. The storeroom must be kept above 50 degrees in winter months to produce ice as per ice production specifications on Page 15.

SETTING UP ICE CUBER

After the ice cuber has been uncrated remove the set of four 6 inch adjustable legs packaged inside the cuber storage bin area. Carefully screw the four 6 inch legs into the four skid bolt holes located on bottom of the ice cuber.

Remove the rear panel by removing the four machine screws holding it to the back of ice cuber, See Fig. 7. With the rear panel off remove the wooden shipping wedge beneath the compressor. Also check to make sure that none of the refrigerant lines have shifted during transit allowing them to rub together or touching any other surface.

SERIAL AND ELECTRICAL PLATE

The combined serial and electrical plate is located outside the ice cuber on right hand end panel in upper front corner. Be sure to read the serial number (14 numbers) and model number when calling for service or parts.

REMOVING LOWER FRONT PANEL

To remove the lower front panel remove the 4 machine screws holding panel in place, See Fig. 1. After the 4 machine screws have been removed pull panel forward on lower edge of panel. To install panel place panel in position and replace the 4 machine screws.

REMOVING TOP COVER

To remove the top cover remove the 2 machine screws on the L.H. and R.H. side of top cover. Lift top cover up and off. See Fig. 1.

REMOVING REAR PANEL

To remove the rear panel remove the 4 machine screws holding rear panel to back of the ice cuber, See Fig. 7. Pull panel forward and off. To install rear panel place panel on back of cuber and replace the 4 machine screws.

ELECTRICAL CONNECTIONS — CHECK SERIAL PLATE

115 volt — 60 cy — 1 Phase
Maximum fuse size (15 Amp)
Minimum Ampacity (8.6 Amps)

GENERAL REQUIREMENTS

All electrical and water supply and drain connections must conform to all local and national codes.

CONNECTING POWER SUPPLY

Your ice cuber should be connected to a separately fused circuit. Fuse size must not exceed maximum fuse size as shown on the electrical plate.

All electrical wiring connected to your ice cuber must be rated equal to the minimum ampacity as shown on the electrical plate.

Remove rear panel and from rear of the ice cuber place separately fused conduit enclosed wires across machine compartment and through the hole at lower left hand portion of the electrical control box, Fig. 2G.

From front of ice cuber remove the lower front panel and electrical control box cover. Connect lead wires with the two loose lead wires suppled in control box. See Fig. 2H. To properly ground the ice cuber connect ground wire to ground screw provided at rear of control box. Fig. 2F. (This is screw with green head.)

After electrical connections have been completed in electrical control box replace rear panel.

WATER SUPPLY

Quality and ice making capacity are affected more by chemistry, temperature, and foreign matter in supply water than any other factor. A survey made of water departments of large cities all over the country made it obvious that external filters or strainers should be installed. Such equipment is very effective in improving ice quality and reducing the frequency of cleaning out the ice making section. Any questions as to the type of water filter or strainers to be used can be answered by your local water treatment company or water department.

CONNECTING WATER SUPPLY

A ½" female pipe fitting is provided in the back of the ice cuber. (See Fig. 7) Install the water filter screen provided with the ice cuber. Use 3/8" O.D. copper tubing for the water supply.

DRAIN CONNECTIONS

It is essential that drain connections be made so waste water can't back up into the ice cuber. On water cooled models a separate connection is provided for discharging condenser water. (Fig. 7B) All connections are labeled. We recommend covering all incoming water and drain lines with a plumbing insulation material to prevent condensation. We recommend using a stand pipe vented to the atmosphere to prevent water traps. Drains must be at least ½" inside diameter and have 1½" drop per 5 feet of run. If drains are not close enough to allow drop for proper drainage, or water is to be drained in a stationary sink higher than ice machine drains, use an automatic condensate disposal pump. (CHECK AND FOLLOW LOCAL PLUMBING CODES)

LEVELING ICE CUBER

After cuber is in place and all electrical and water supply and water drain connections have been completed, level the ice cuber by adjusting the levelers built into each 6 inch leg.

FINAL CHECK LIST

1. Is cuber level? (Important)
2. Water level in sump trough should be as high as possible, but too high a water level wastes water and reduces ice making capacity.
3. Turn the ice cuber on and off several times to flush clean water through the system and to observe that waste water drains properly.
4. Check water distributor tube above evaporator and see that it is distributing the water properly and evenly over the front of the evaporator. See Fig. 3A.
5. Check all refrigerant and conduit lines to guard against vibrations and possible failure.
6. The installer should replace the electrical control box cover and the lower front panel.
7. Has owner been instructed on how to operate and clean the cuber?
8. Have installation and warranty cards been filled out? This is for the owner's protection.
9. Is there 4'' clearance around cuber for proper air circulation?
10. Does room maintain a minimum of 50° F during winter months in order to produce ice as per ice production specifications on Page 15.
11. Check water and drain connections for water leaks.
12. The ice size controls consist of a pressure control (opens on pressure rise) and a Solid State Time clock. These controls are factory set and should need no or very little adjustment.

STARTING UP ICE CUBER

1. Remove tape securing float valve inside sump trough area. See Fig. 3. Make sure wooden shipping wedge was removed from under the compressor when ice cuber was uncrated.

2. Turn on water, and observe that the float valve shuts off the water when the level is about 2 inches deep. Should float require adjustment merely bend float rod carefully until desired water level is achieved.

3. Turn the main toggle switch Fig. 2 to water pump position. The water pump will start pumping water to the water distributor tube located on top of the evaporator. See Fig. 3. Return water will flow into the sump trough located beneath the evaporator.

MANITOWOC FREEZE AND HARVEST CONTROL FOR AO100 SERIES MODELS AD & AR

The freeze and harvest cycles on the above mentioned ice cuber models are regulated by three very simple controls.

1. Low side pressure control. Fig. 2.
2. Solid state timer Fig. 2.
3. Suction line thermo-disc Fig. 4.

On starting a warm machine the suction pressure may be upwards of 75 PSIG, but as the compressor runs, the suction pressure and temperature within the suction line is lowered. When the suction line pressure reaches 7 lbs. in the regulator cube unit (9 lbs. in the dice cube unit) the low side pressure control electrically activates the solid state timer starting the time cycle. When the time cycle has elapsed the timer locks in its own lock-in relay putting ice cuber into the harvest cycle. When timer lock-in relay closes the water pump and air condenser fan motor on air cooled models stop and hot gas valve opens. The cuber will remain in the harvest cycle until the thermo-disc opens. The thermo-disc will open when suction line temperature reaches 52° F which is after ice has been released from the evaporator. When the thermo-disc opens this terminates the harvest cycle by allowing the timer lock-in relay to open closing the hot gas valve and starting the water pump and air condenser fan motor

on air cooled cubers. The ice cuber is now back into the next freeze cycle. As soon as suction line temperature reaches 40° F again the thermo-disc will close setting up timer for next harvest cycle.

If the dimple in the cubes is too pronounced you may adjust the solid state timer as shown in Fig. 10 increasing the freezing time. Likewise if the bridging between the cubes is too heavy you may adjust the timer as shown in Fig. 10 to shorten the freeze time.

HIGH PRESSURE CUT-OUT (FIG. 6)

The high pressure cut-out shuts off the entire ice cuber, should the head pressure exceed 275 PSIG. If cuber goes out on high head pressure the high pressure cut-out control has to be manually reset after the cause of the high head pressure has been corrected.

High pressure cut-out used on water cooled models only.

TOGGLE SWITCH (FIG. 2)

The main power "ON and OFF" toggle switch is double pole, double throw switch with "OFF" in the center position. With the toggle switch in the "water pump" position, only the water pump will operate. This is for checking the water inlet float level, pump operation, and for circulating cleaning solution.

With the toggle switch in the "ICE" position, the water pump, compressor and condenser fan (air cooled models), run for a normal ice making cycle.

LOW PRESSURE CUT-IN CONTROL (FIG. 2)

This control is a pressure control that opens on pressure rise. Upon decrease in suction pressure (10 lbs. ½ dice & dice cube, 9 lbs. regular cube) the pressure control closes, electrically activating the time cycle on the solid state timer.

A lower setting on the control will produce larger cubes; a higher setting smaller cubes. This control activates solid state timer, which then takes over balance of freezing cycle.

WATER PUMP FIG. 5

Recirculating pump used to pump supply water to water distributor tube above evaporator.

HOT GAS SOLENOID DEFROST VALVE FIG. 5

Hot gas solenoid is closed during the cuber freeze cycle. When time cycle on solid state timer has elapsed the hot gas solenoid valve is opened. The water pump and condenser fan motor on air cooled models will stop. Cuber is now in hot gas defrost cycle.

THERMO-DISC (FIG. 4)

Thermo-disc is designed to close at 40° F and cut-out at 52° F.

When thermo-disc closes at 40° F it sets up the timer for the harvest cycle. When thermo-disc opens at 52° it takes the timer out of the harvest cycle putting ice cuber back into the freezer cycle.

BIN CONTROL (FIG. 2)

To automatically shut machine off when ice level in storage bin reaches thermobulb. Fig. 3G. Automatically starts machine when ice level in bin falls below thermobulb location.

To properly adjust the bin control see Fig. 9.

SETTING TIMER

Should it be necessary to adjust the solid state timer for an accurate bridge thickness proceed as follows:

1. Remove lower front panel. Fig. 1.
2. Remove control box cover. Fig. 2.
3. Locate timer. Fig. 2.
4. To increase rotate dial clockwise. Fig. 10.
5. To decrease rotate dial counter clockwise. Fig. 10.

SOLID STATE TIMER (FIG. 2 & FIG. 10)

When suction line pressure has dropped low enough the low pressure control will close activating the time cycle of the solid state timer. The length of the time cycle is adjustable as shown in Fig. 10. When the time cycle has elapsed the timer will lock in its own lock-in relay, cycling the ice cuber into hot gas or harvest cycle. Simultaneously, the water pump (and condenser fan on air cooled models) are shut off.

The length of the harvest is controlled by the suction time thermo-disc. Fig. 4.

NOTE:

The model AO100 ice cuber was manufactured with several different style solid state timers. These timers are interchangeable with one another. Should it be necessary to have to replace one with the other the wiring would be the same. The only thing to make sure of is that the numbered wires are placed on the terminals with the corresponding numbers.

FRONT VIEW OF ICE CUBER IN POSITION

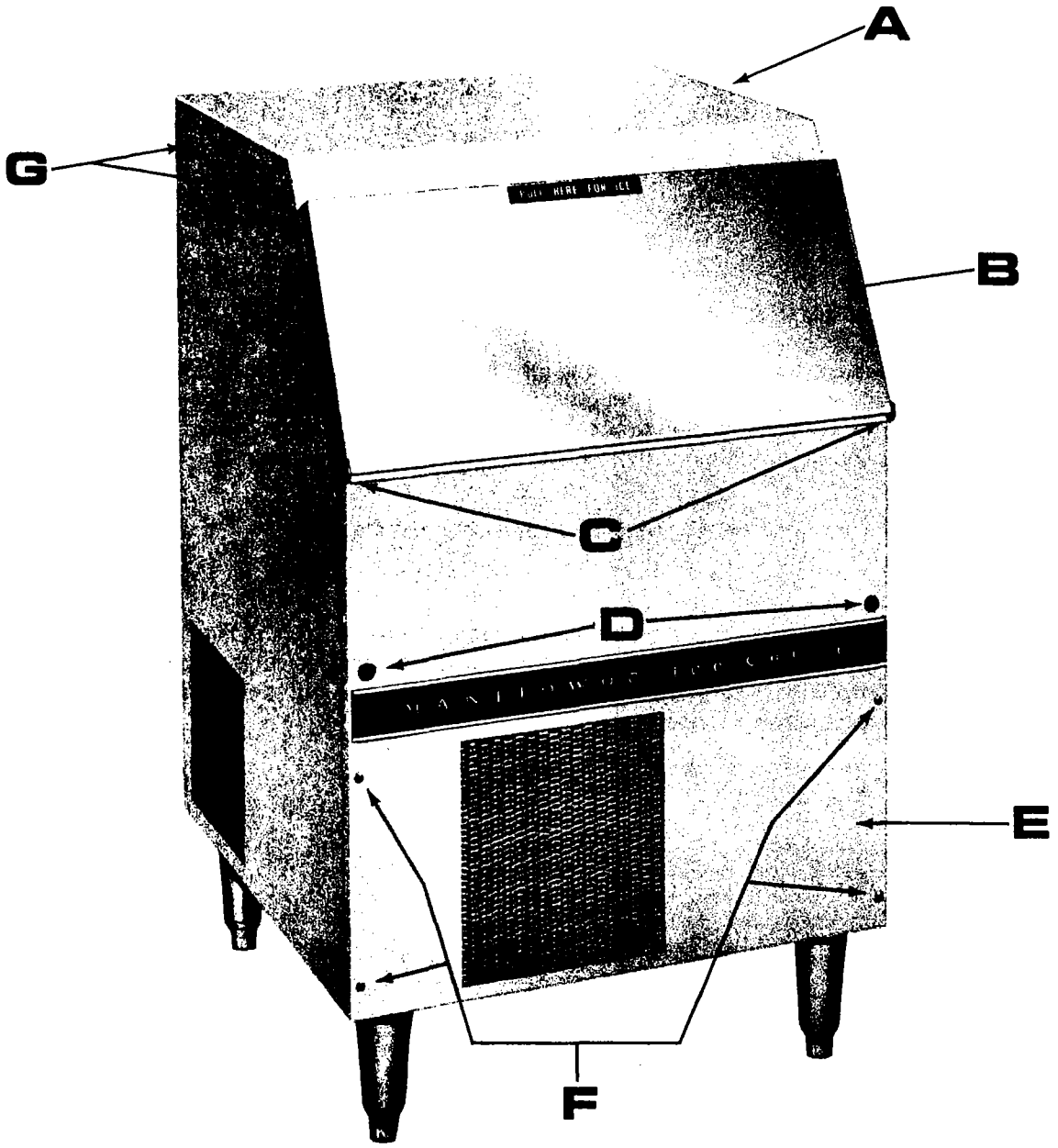

FIG. 1

A. Top cover.
B. Bin door.
C. Bin door right and left hand hinges.
D. Bin door bumpers.
E. Lower front compressor compartment panel.
F. Front panel mtg. machine screws.
G. 2 of the 4 top cover mtg. machine screws.

FRONT VIEW OF COMPRESSOR COMPARTMENT

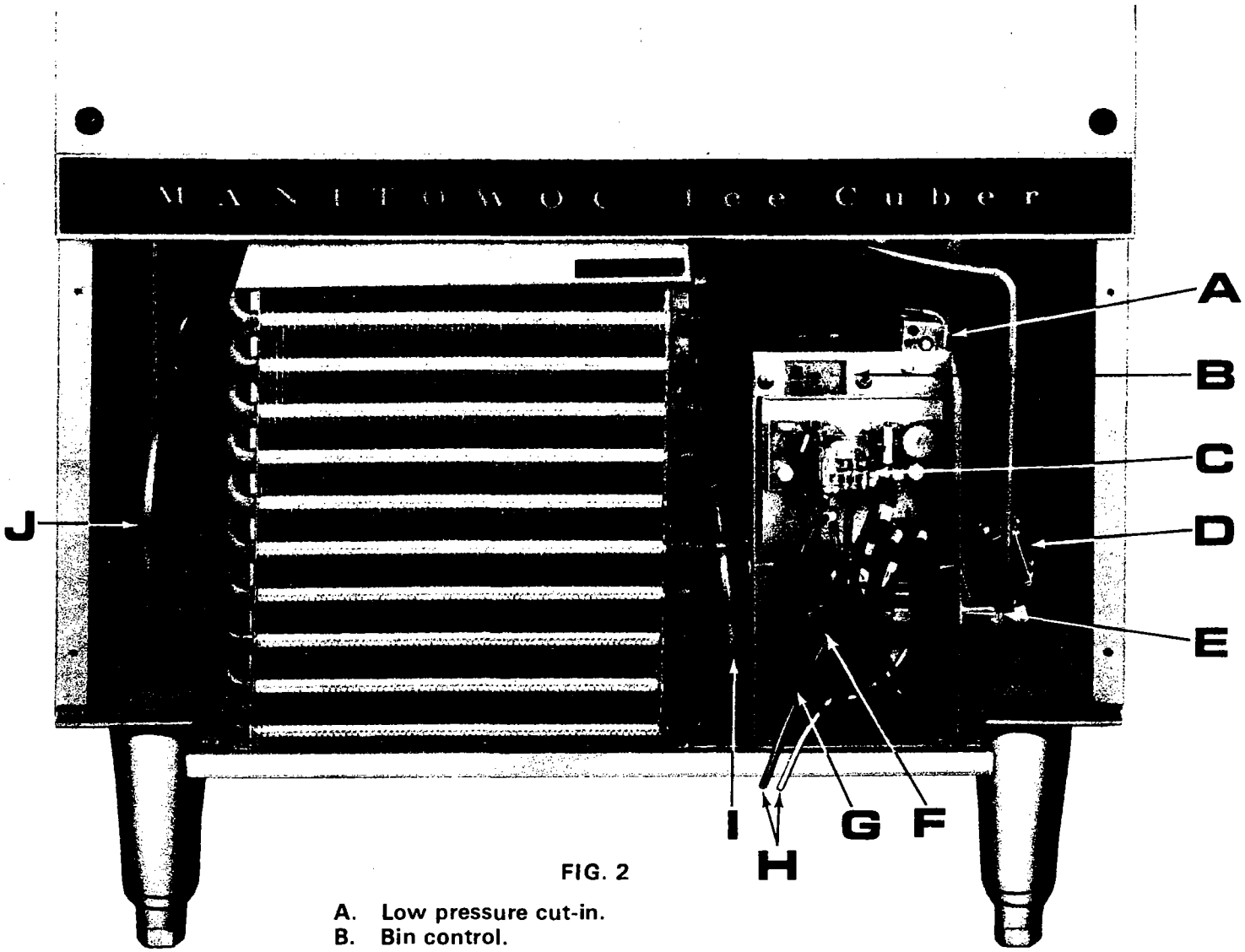

FIG. 2

A. Low pressure cut-in.
B. Bin control.
C. Solid state timer.
D. Hot gas solenoid valve.
E. Main toggle switch.
F. Ground wire screw (Green head).
G. Electrical control box electrical inlet.
H. Electrical wires as supplied in control box.
I. High side processing tube.
J. Low side processing tube.

TOP VIEW OF ICE CUBER WITH TOP COVER OFF

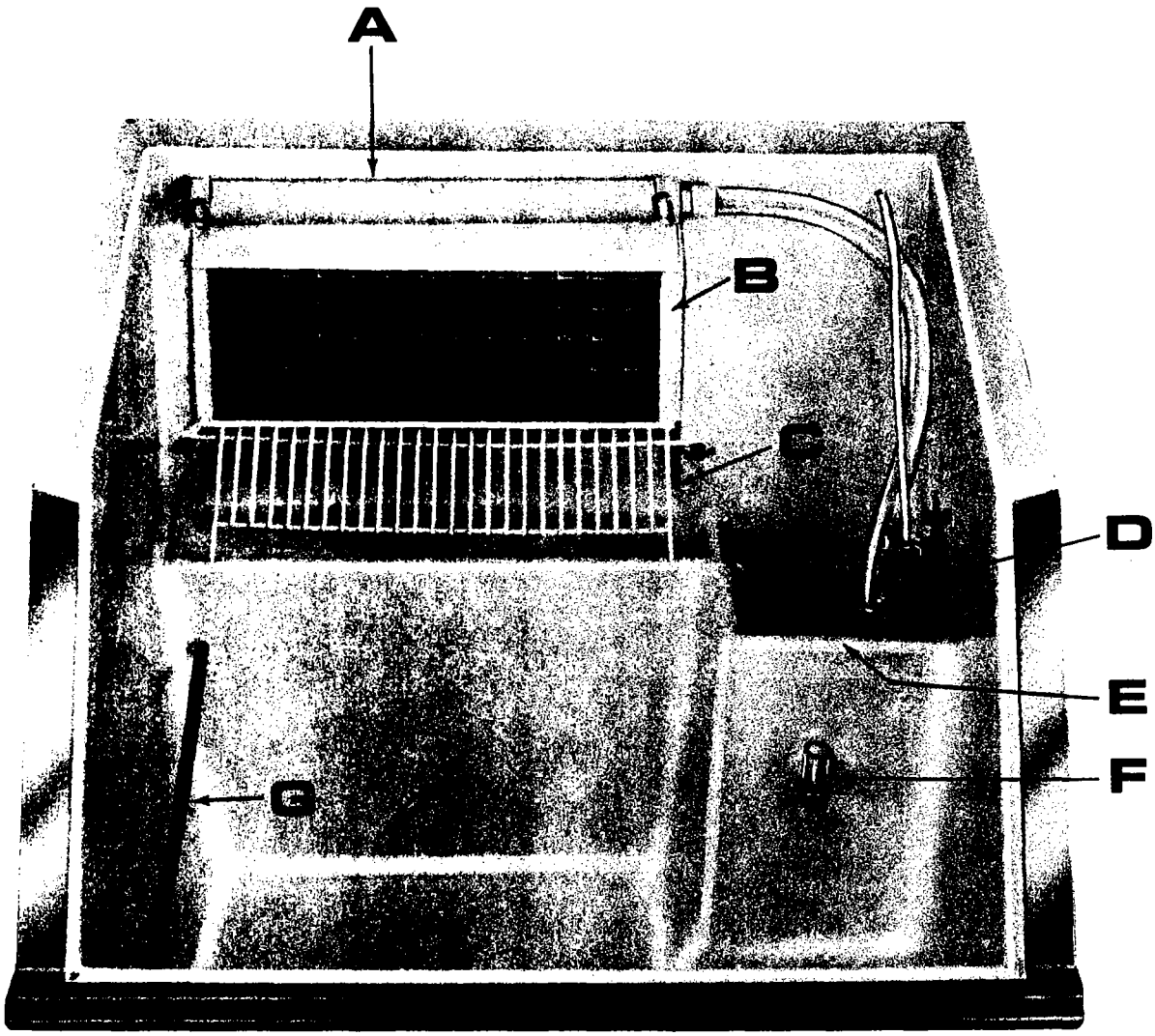

FIG. 3

A. Water distributor tube assy.
B. Evaporator assy.
C. Harvest rack.
D. Float valve assy.
E. Water pump intake baffle.
F. Sump overflow tube.
G. Bin control thermobulb.

REAR VIEW OF ICE CUBER WITH REAR PANEL OFF

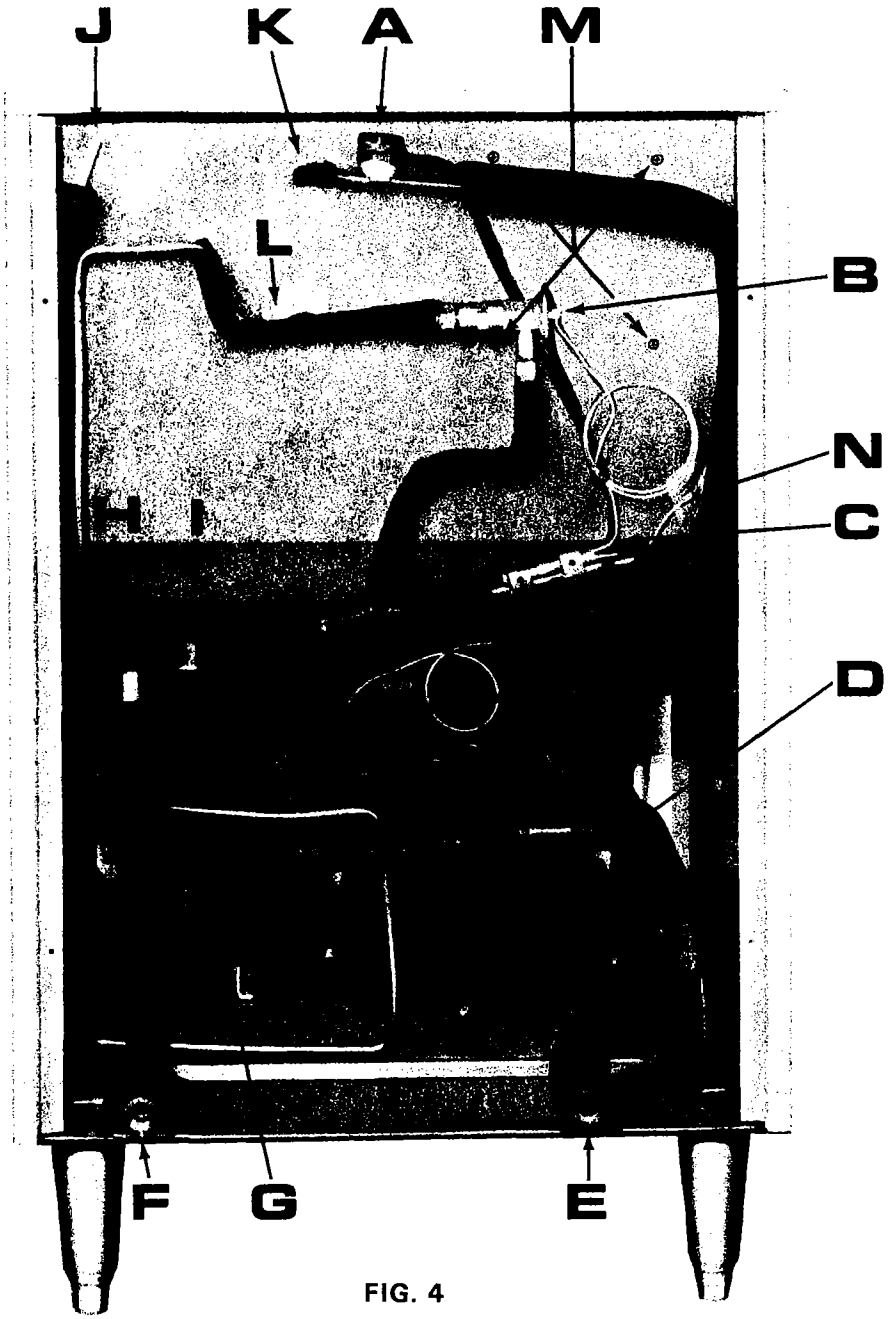

FIG. 4

A. Suction line thermo disc.
B. Expansion valve.
C. Expansion valve bulb & clamp.
D. Hermetically sealed compressor.
E. Bin water drain.
F. Ice making water inlet.
G. Water pump.
H. Water pump discharge tube into bin and to water distributor tube.
I. Sump drain leading to water pump inlet.
J. Water supply tube leading to float valve in sump trough.
K. Evaporator outlet refrigerant tube.
L. Evaporator inlet refrigerant tube.
M. Evaporator mounting screws.
N. Bin thermobulb inlet opening showing bin control capillary tube in place.

AIR COOLED COMPRESSOR ASSY.

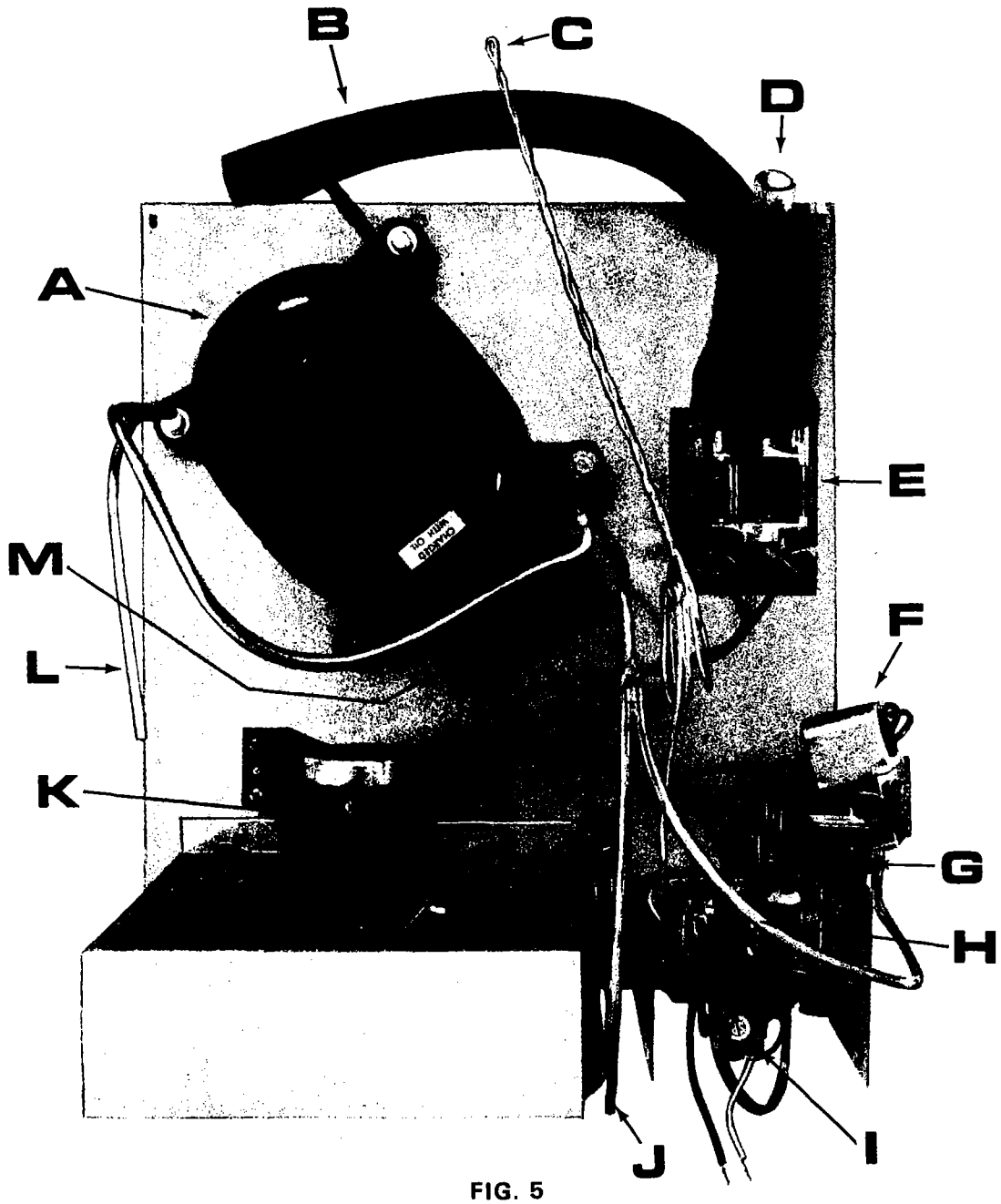

FIG. 5

A. Hermetically sealed compressor.
B. Water pump inlet tubing.
C. Bin control capillary tube.
D. Water pump discharge tubing.
E. Water pump.
F. Hot gas solenoid valve.
G. Low pressure cut-in control.
H. Bin control.
I. Solid state timer.
J. High side processing tube.
K. Fan motor.
L. Low side processing tube.
M. Compressor start capacitor & junction box assy.

WATER COOLED COMPRESSOR ASSY.

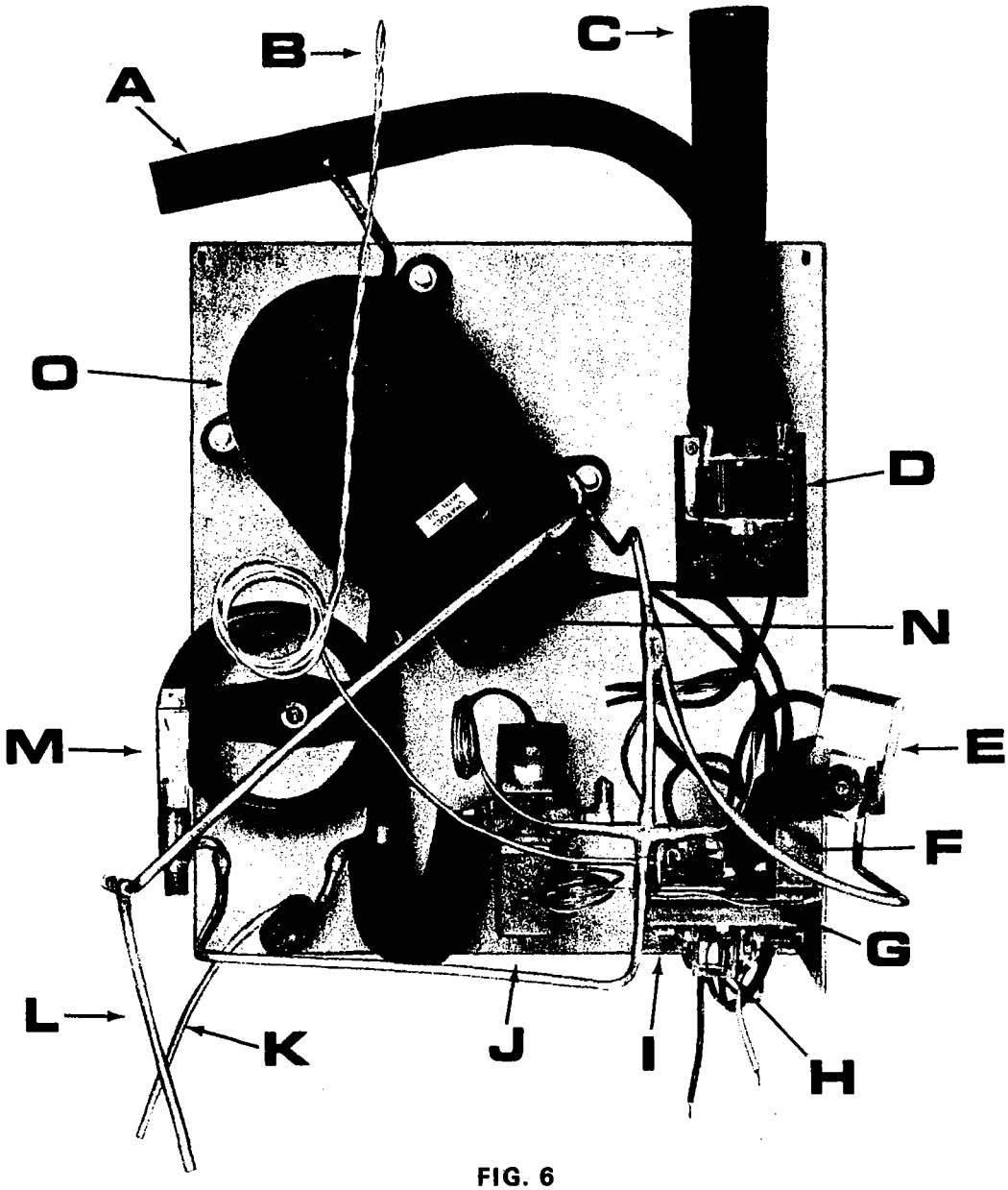

FIG. 6

A. Water pump inlet in tube.
B. Bin control capillary tube.
C. Water pump discharge tube.
D. Water pump.
E. Hot gas solenoid valve.
F. Low pressure cut-in.
G. Bin control.
H. Solid state timer.
I. High pressure cut-out reset button (used on water cooled cubers only)
J. Water regulating valve (For water condenser)
K. High side processing tube.
L. Low side processing tube.
M. Water condenser (Packless)
N. Compressor start capacitor & junction box assy.
O. Hermetically sealed compressor.

REAR VIEW OF ICE CUBER WITH REAR PANEL IN PLACE

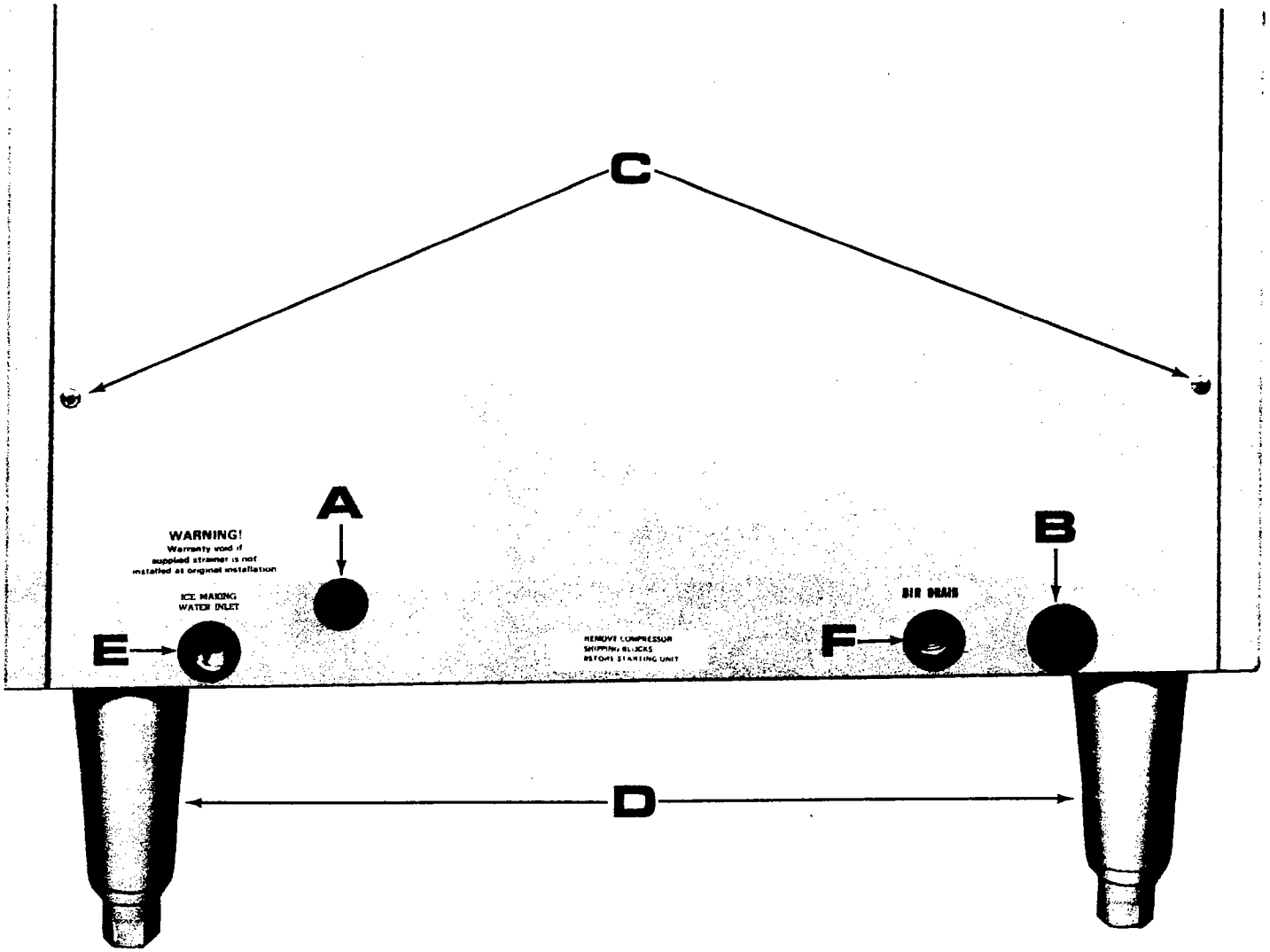

FIG. 7

A. Electrical opening.
B. This opening used for water condenser drain on water cooled models only.
C. 2 of the 4 rear panel mounting machine screws.
D. 6'' leveling legs.
E. Ice making water inlet.
F. Bin drain.

GENERAL SPECIFICATIONS

Manitowoc 100 Series Self-contained Ice Cubers install anywhere — ideally suited for installation under bars. Ice production stops when bin is filled and restarts when ice is removed, with use of bin thermostat. Dice Cube — Regular Cube . . . Air and Water cooled models.

STYLING

Smart and contemporary. Fits in beautifully with any decorating scheme or color. Standard exterior finish is baked enamel Sandtone. Bin door is stainless steel.

ICE — ICE PRODUCTION

The 100 Series Manitowoc Ice Cubers produce up to 100 pounds per day. (See Production Chart) Dice Cube Models — 7/8 inch cube, Regular Cube Model — 1-1/8 inch cube, or half dice 3/8 x 7/8 x 7/8 inches.

BINS

Polyurethane "foamed in place" insulation for maximum strength and ice retention. Bin liners constructed of Cycolac "TM". Molded design for fast, easy cleaning. Bin exterior is heavy steel construction with baked enamel finish. Full width lid for convenient ice removal. Bin capacity up to 40 lbs.

SANITATION

Protected against contamination by sealed, isolated and insulated ice making compartment. Automatic flush-away of sediment assures clean water for every cycle. Can be cleaned thoroughly in minutes by disassembling or by using approved liquid ice machine cleaner.

INSTALLATION AND SERVICE

Easy, fast, inexpensive. Removable service panels. All refrigeration and electrical components are readily accessible to save time, trouble and money.

WARRANTY

One full year warranty covers all parts. Four-year additional warranty on compressor at no extra cost.

ICE PRODUCTION — lbs. per 24 hours

Regular Cube — 1-1/8"					Dice Cube — 7/8"					Half Dice — 3/8" x 7/8" x 7/8"				
MODELS	Incoming Water Temp.	Room Temp.			MODELS	Incoming Water Temp.	Room Temp.			MODELS	Incoming Water Temp.	Room Temp.		
		70°	80°	90°			70°	80°	90°			70°	80°	90°
AR-0100A	50°	90	80	70	AD-0102A	50°	100	90	80	AY-0104A	50°	100	90	80
	70°	85	75	65		70°	95	85	75		70°	95	85	75
	90°	80	70	60		90°	90	80	70		90°	90	80	70
AR-0101W	50°	90	85	80	AD-0103W	50°	100	95	90	AY-0105W	50°	100	95	90
	70°	85	80	75		70°	95	90	85		70°	95	90	85
	90°	80	75	70		90°	90	85	80		90°	90	85	80

SPECIFICATIONS *

	Regular Cube — 1-1/8"		Dice Cube — 7/8"		Half Dice — 3/8" x 7/8" x 7/8"	
MODELS:	AR-0100A	AR-0101W	AD-0102A	AD-0103W	AY-0104A	AY-0105W
Height	32 ½"	32 ½"	32 ½"	32 ½"	32 ½"	32 ½"
Width	24-1/8"	24-1/8"	24-1/8"	24-1/8"	24-1/8"	24-1/8"
Depth	24"	24"	24"	24"	24"	24"
Approx. Shipping Weight	188 lbs.	188 lbs.	188 lbs.	188 lbs.	188 lb.	188 lb.
Electrical Characteristics Connect to 15 Amp Circuit	115V-60Cy Single Phase (AC)	115V-60Cy Single Phase (AC)	115V-60Cy Single Phase (AC)	115V-60Cy Single Phase (AC)	115V-60Cy Single Phase (AC)	115V-60Cy Single Phase (AC)
Compressor Size	¼ H.P.	¼ H.P.	¼ H.P.	¼ H.P.	¼ H.P.	¼ H.P.

* Subject to change without notice

Add 2" to depth for water and drain

LEGS

ADD TO HEIGHT OF CUBER
Adjustable legs No. 606 — Overall Height from 6" to 7¾"
No. 612 — Overall Height from 12" to 13¾"
Packed in Cuber

148 different combinations of Manitowoc Ice Cubers and Dispensers. Air or water cooled. Capacities from 165 to 2200 lbs. Available in standard Sandtone finish or stainless steel.

INSTALLATION DIMENSIONS

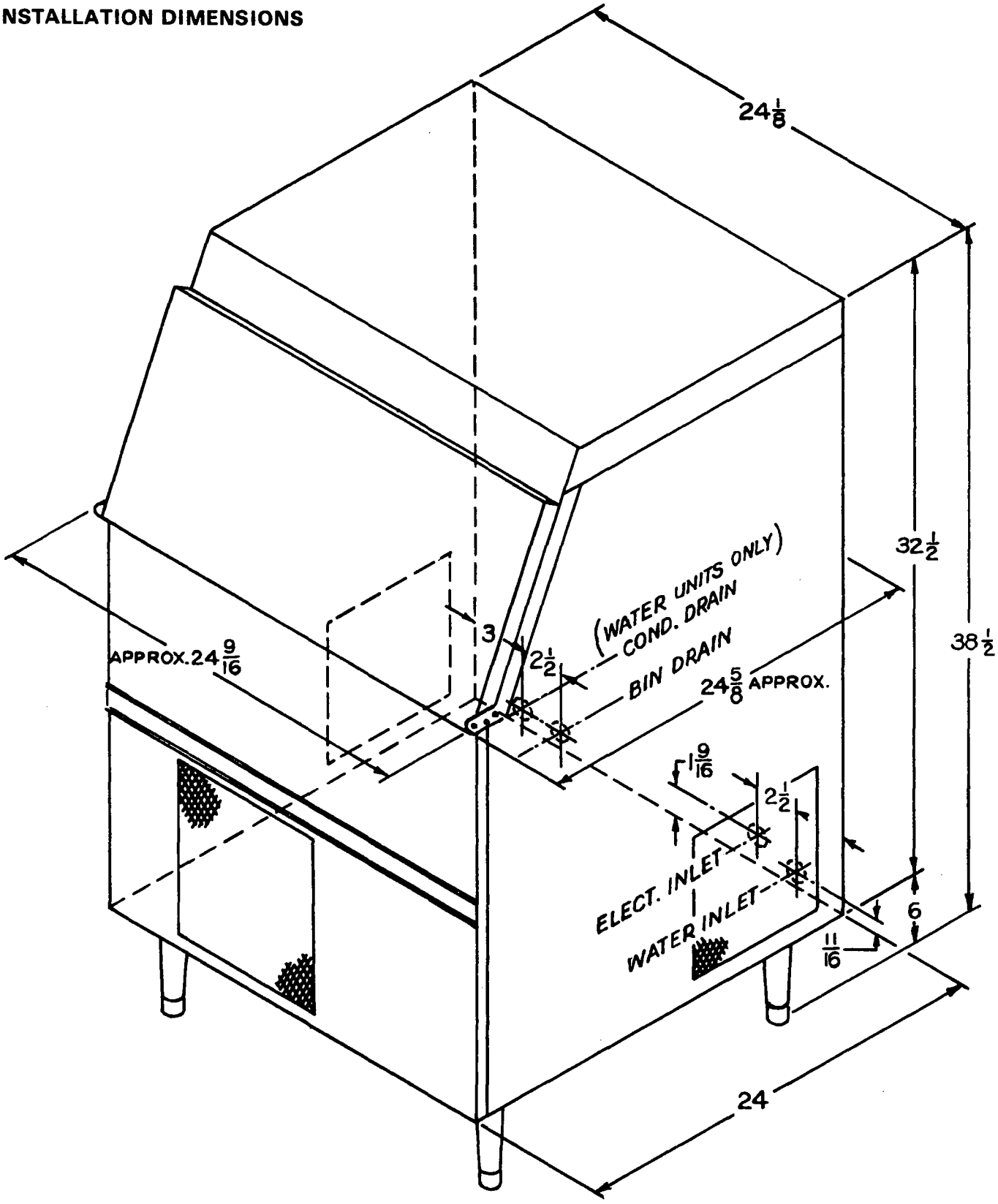

FIG. 8

A0100 SERIES CUBER

THERMOSTATIC BIN CONTROL – A0100

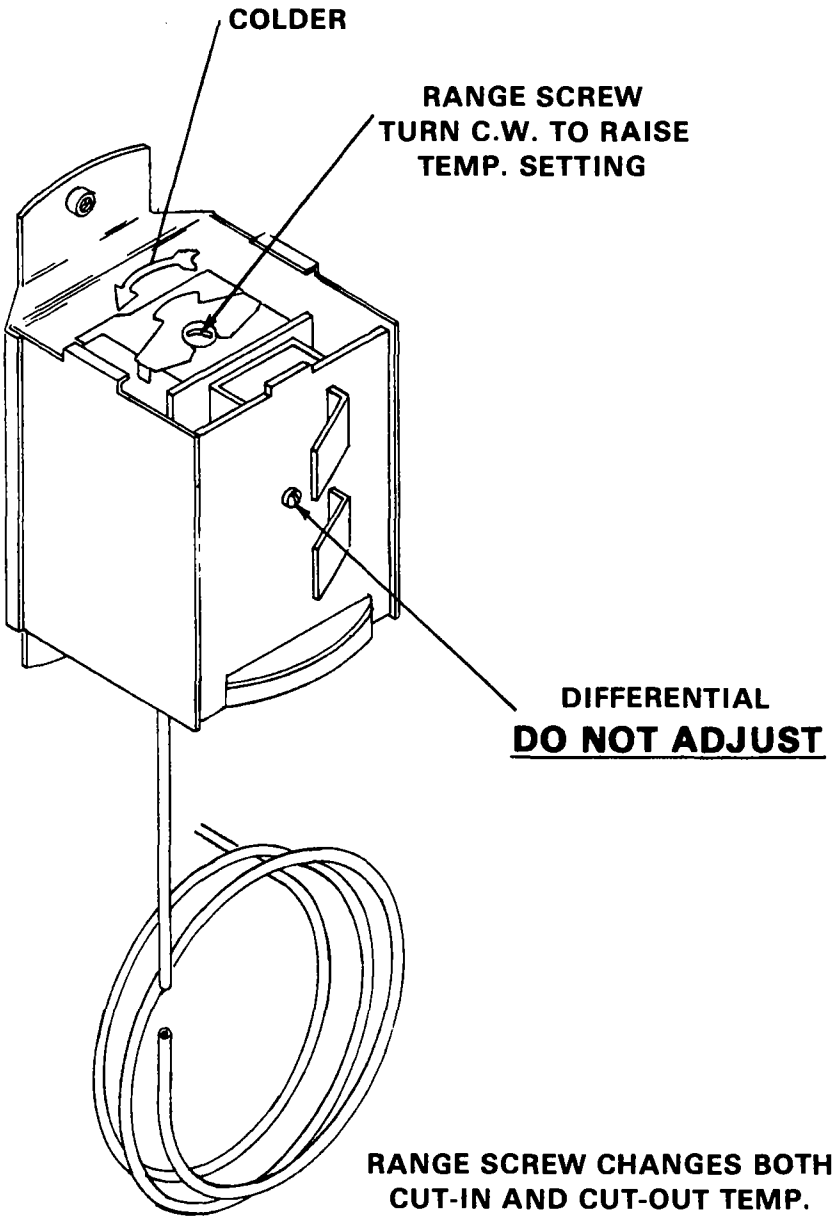

FIG. 9

IF CUBER DOES NOT SHUT OFF WHEN BIN IS FULL, REMOVE COVER FROM THERMOSTATIC BIN CONTROL. TURN RANGE SCREW CLOCKWISE TO RAISE TEMPERATURE UNTIL CORRECT SETTING IS FOUND FOR YOUR AREA.

Solid State Timer Adjustment

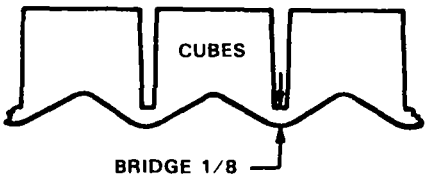

To change bridge thickness, an adjustment of the solid state timer is required. This timer is located inside the electrical control box.

CAUTION: Before removing the control box cover, the cuber's main power supply should be turned off to prevent any electrical shock or accidental wire shorting.

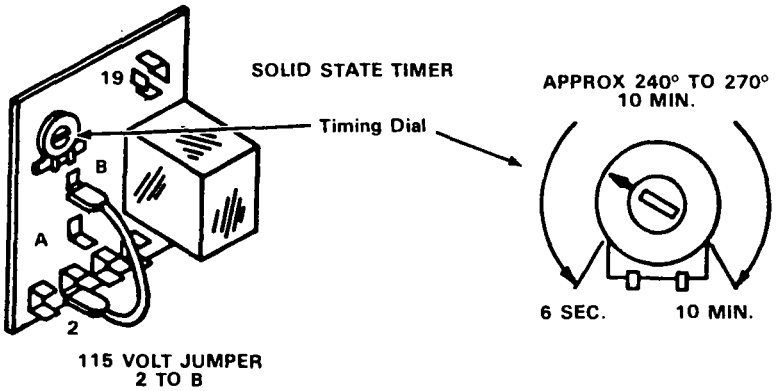

To adjust the solid state timer — (see above).

1. Remove control box cover — (see Page 8).
2. Locate the timer and the dial.
3. To increase bridge thickness, rotate dial clockwise.
4. To decrease bridge thickness, rotate dial counter-clockwise.

Adjustments should not be greater than 10° to 15° at one time. After each adjustment allow the cuber to produce two ice harvests and observe bridge thickness. Repeat this procedure as required.

FIG. 10

SERVICE ANALYSIS

COMPLAINT	CAUSE	CORRECTIVE MEASURES
Slow harvest	Contaminated or limed water system	Clean water system
	Low ambient (air cooled models)	Must be above 50° F
	Water valve set too low	Adjust water valve to 125 PSIG head pressure (Water cooled models)
	Leaking water valve (water cooled models)	Replace water valve
High head pressure	Air in system	Evacuate and recharge
	Defective water valve (water cooled models)	Replace water valve
	Defective fan (air cooled models)	Replace fan
	Water valve not properly adjusted (Water cooled models)	Adjust water valve
	Contaminated air cooled condenser	Clean condenser
	Defective expansion valve	Replace
High suction pressure	Contaminated condenser	Clean
	Defective fan	Replace fan
	Defective water valve (water cooled models)	Replace or adjust water valve
	Moisture in system	Replace drier, evacuate and recharge
Low suction pressure	Shortage of refrigerant	Locate leak and repair
	Moisture in system	Replace drier, evacuate system
	Ambient too low for operation	Must be above 50° F
Unit noisy	Tubing touching each other	Separate tubing so it does not touch
	Fan shroud touching fan blades	Adjust fan mounting brackets
	Loose fan blade	Tighten fan blade
Ice maker will not stop when full of ice	Bin control out of adjustment	Adjust bin control
	Defective bin control	Replace bin control
Time clock will not operate	Pressure control not closing	Replace control or properly adjust
	Low pressure not low enough	Replace expansion valve
	Timer defective	Replace timer
	Thermo disc is not closed	Check thermo disc
Small cube bridge	Pressure control not opening	Replace control
	Leak in refrigeration system	Locate leak, repair, evacuate and recharge.
Machine will not cycle into harvest	Defective time clock	Replace
	Defective thermo disc or thermo disc loose on suction line	Replace or tighten on suction line
	Bad hot gas valve	Replace valve
	Bad low pressure cut-in	Check & adjust or replace if necessary
	Low side pressure not getting low enough to actuate pressure control	Bad expansion valve

Unit will not run	Blown fuse	Replace fuse & check for cause of blown fuse.
	Switch in Off position	Turn switch to On position
	Inoperative main switch	Replace switch
	Out on high pressure cut-out (Water cooled models)	Repair cause of high head pressure & reset pressure control
Compressor cycles intermittently	Low voltage	Check circuit for overloading. Check voltage at the supply to the building. If low, contact the power company.
	Dirty condenser	Clean with vacuum cleaner air or stiff brush. (DO NOT USE WIRE BRUSH)
	Air circulation blocked	Allow sufficient air space all around unit.
	Inoperative condenser fan motor	Check to see if defective If defective, replace.
	Non-condensable gases in system	Purge the system
Irregular size cubes and some cloudy	Holes in water distributor tube plugged	Clean distributor tube.
	Shortage of water	Check water pump & water level in sump trough.
	Unit not level	Check and level.
	Water distributor tube not properly adjusted	Adjust
Large cube bridge	Low side control set too low	Raise setting on low side control.
Decreased ice capacity	Inefficient compressor	Replace
	Leaky hot gas valve	Replace
	High head pressure	Dirty condenser. Clean. Bad fan motor. Replace. Non-condensable gas in the system. Purge the system. Too hot a location with poor circulation: Relocate the unit, or provide for ventilation by cutting openings Overcharge of refrigerant Correct the charge.

SPECIFICATIONS:

60 CYCLE

CUBER MODEL	AR & AD 100 SERIES WATER COOLED	AR & AD 0100 SERIES AIR COOLED
Volts	115	115
Compressor Model	JFC1-0025-IAA201	JFC1-0025-IAA201
Compressor Voltage	115 V 60 Cy. 1 Ph.	115 V 60 Cy. 1 Ph.
Winding Resistance Common to Run	*	*
Winding Resistance Common to Start	*	*
Start Capacitor Rating	233-280 MFD, 110 volts	233-280 MFG, 110 volts
Fan Motor		115 Volts
Solenoid Valve Volts	115 Volts	115 Volts
Refrigerant Charge — R-12	8 oz.	10 oz.
Minimum Ampacity	15 Amps	15 Amps

		WATER COOLED			AIR COOLED		
Room Temperature		70	90	105	70	90	105
HEAD PRESSURE	Maximum	125	125	126	135	180	215
	Minimum	120	120	121	101	140	165
SUCTION PRESSURE	Maximum	20	21	22	18	22	23.5
	Minimum	4	4	5	7	8	8.5

* Compressor Model JFC1-0025-IAA201 comes equipped from Copeland with a General Electric or Emerson internal motor.

The motor manufacturer is identified on the compressor nameplate by a letter preceding the serial number such as E-63B14851, E-Emerson motor. G-General Electric. Because of this the winding resistance will vary.

	WATER COOLED	AIR COOLED
Winding Resistance common to run ± 7%		
Emerson	1.86	1.86
General Electric	1.71	1.71
Winding Resistance common to start ± 7%		
Emerson	8.58	8.58
General Electric	5.79	5.70

FIG. 11

A-0100 SERIES AIR AND WATER FAN ON AIR-COOLED ONLY SHOWN AT BEGINNING OF FREEZE CYCLE 115V 60CY OR 230V 50CY

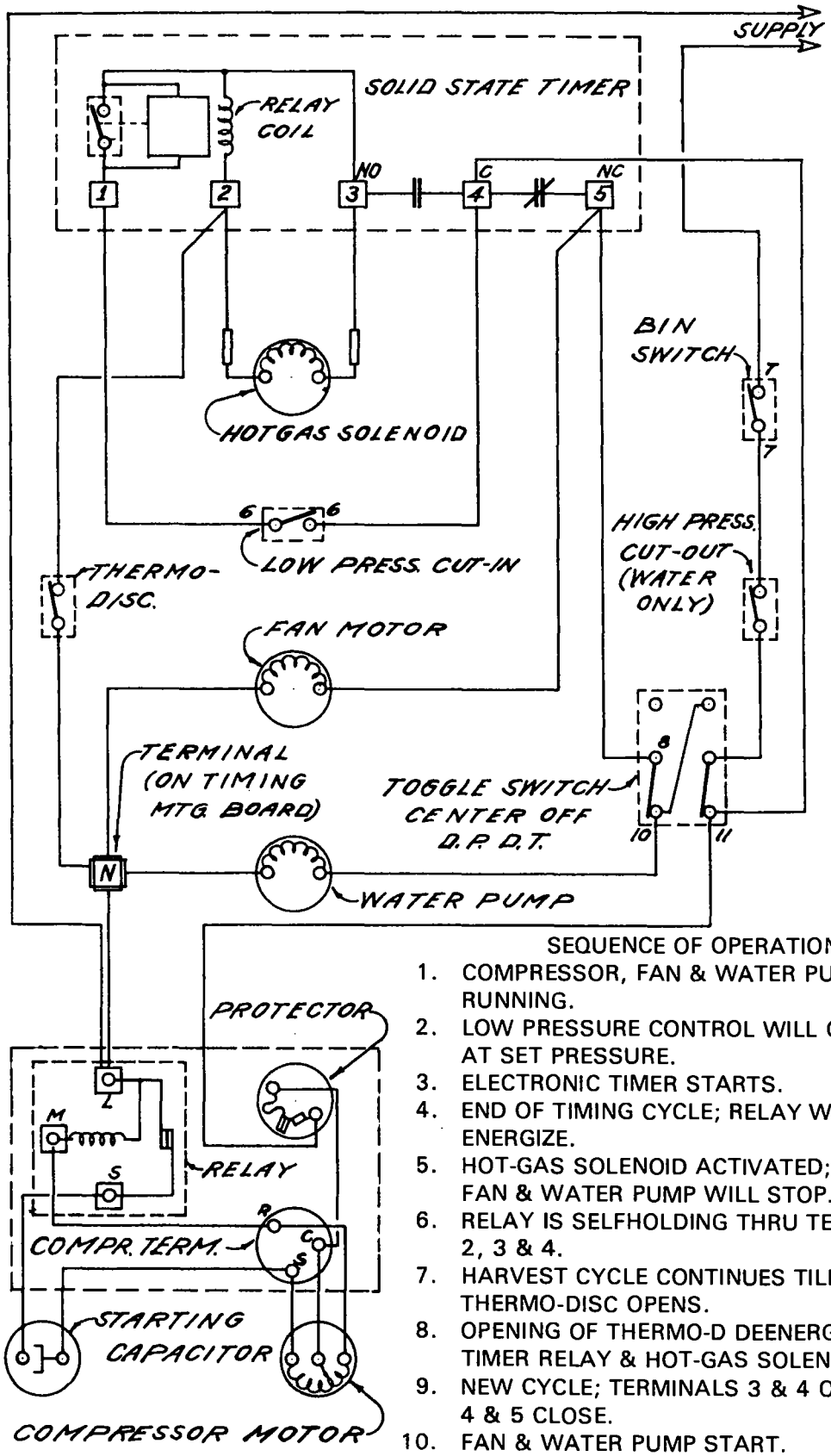

SEQUENCE OF OPERATION

1. COMPRESSOR, FAN & WATER PUMP RUNNING.
2. LOW PRESSURE CONTROL WILL CUT-IN AT SET PRESSURE.
3. ELECTRONIC TIMER STARTS.
4. END OF TIMING CYCLE; RELAY WILL ENERGIZE.
5. HOT-GAS SOLENOID ACTIVATED; COND. FAN & WATER PUMP WILL STOP.
6. RELAY IS SELFHOLDING THRU TERMINALS 2, 3 & 4.
7. HARVEST CYCLE CONTINUES TILL THERMO-DISC OPENS.
8. OPENING OF THERMO-D DEENERGIZES TIMER RELAY & HOT-GAS SOLENOID.
9. NEW CYCLE; TERMINALS 3 & 4 OPEN, 4 & 5 CLOSE.
10. FAN & WATER PUMP START.

CLEANING INSTRUCTIONS

IN PLACE CLEANING

To clean the ice cuber water system without removing the components proceed as follows. NOTE — this is only recommended in locations where impurity build-up is not heavy.

1. Shut off ice cuber.
2. Remove ice from bin.
3. Shut off water supply and remove water from water sump.
4. Pour one oz. of recommended ice machine cleaners into sump and turn supply water on. (See note below)
5. Place toggle switch to water pump position and circulate cleaner for about 15 minutes.
6. After cleaning shut machine off and remove cleaner. Flush water system thoroughly.
7. Clean ice storage bin with ice machine cleaner also.

DISASSEMBLING WATER SYSTEM FOR CLEANING

To clean parts by removing proceed as follows:

1. Shut machine off.
2. Remove glide assembly, sump/baffle.
3. Disassemble distributor tube. Fig. 3.
4. Remove and disassemble water pump as follows:

A. Clear water from sump.
B. Disconnect power.
C. Remove lower front panel.
D. Loosen hoses from bottom of bin (not pump).
E. Remove pump mtg. screws to base.
F. Pull pump forward; disconnect lead wires.
G. Remove four screws from pump housing.
H. Disassemble water-impeller by holding fan blade and rotate impeller counter clockwise.

(NOTE: Do not dismantle rubber seal.)

J. Clean impeller and housing.
K. Reassemble pump to unit in reverse order as per instruction.

NOTE:

Scrub all parts removed using a nylon scouring pad, brushes, and a cleaning solution such as LIME-A-WAY from Economics Laboratory, Inc., or Nickle Safe from Calgon. Rinse all parts with clear water.

It is recommended that the ice be removed from the storage bin before scrubbing the bin and evaporator assembly. Rinse with clear water. Check to see that overflow or drain hole in the bin is clear and that water drains through freely.

Reassemble unit. To sanitize unit, mix ONE TEASPOON OF SODIUM HYPOCHLORITE IN ONE GALLON OF WATER. Pour solution into sump, then turn toggle switch to the top to start water pump. Keep pouring solution into sump until system has enough to keep pump primed. After one minute, turn off pump and remove solution from water sump. Repeat with clear water before turning switch back to the ice making position. Make visual inspection for leaks and operation.

AIR CONDENSER

Clean air condenser with vacuum cleaner, air or stiff brush (Do not use wire brush).

SERVICE AND PARTS PROCEDURES

ORDERING PROCEDURE

Replacement parts for Manitowoc ice machine equipment should be ordered directly from your local Manitowoc Ice Machine distributor. Parts are stocked by the distributor in order to provide prompt and efficient service for ice machines sold in their areas.

Should you encounter difficulty in locating a Manitowoc distributor in your area, contact Manitowoc Service Parts Dept. for the name or names of distributors in your area.

When placing your order, be sure to do as follows:

1. Print name and address plainly.
2. If special routing is requested, please show the name of the carrier.
3. Indicate quantity desired, print catalogue part number plainly and print name as shown in the catalogue.
4. **Indicate model and serial number of the unit.** The complete serial number is needed.
5. If uncertain as to the proper part number, please give a complete discription or sketch of the part and the location of the part which is needed.
6. Check to see that all required information is contained in your order to facilitate prompt shipment. All replacement parts shipped from the factory on a f.o.b. Manitowoc basis. It is company policy to bill for all field replacement parts, according to terms as specified by our Credit Department.

Parts ordered will be honored by the factory and will be billed according to our parts list schedules.

Transportation companies are responsible for damage in transit as all shipments are tendered to them in good condition; and our responsibility ceases upon receipt of a signed bill of lading from the carrier. If the shipment arrives in a damaged condition or is short, the delivery carrier should be notified immediately.

RETURN OF DEFECTIVE PARTS

All defective parts returned to the factory, transportation prepaid, must be properly packaged to prevent further damage and tagged with a return material tag properly filled in. It is especially important that the cabinet serial number be secured and recorded on the tag, securing as much information as possible about the nature of the defect to prevent any delays in issuing credit. All parts should be returned as they are removed from the cabinet and not mutilated or tampered with. The return material tags are provided on a no-charge basis by the factory upon receipt of your request. Upon the receipt of these parts here at the factory, they will be inspected; and if they are found to be defective, in material and workmanship, under normal use and service, credit will be issued. Any part not properly packaged will be returned to the sender freight collect and no credit will be issued.

IMPORTANT: All warranty parts must be returned to the dealer from whom the replacement part was purchased. The dealer will return the part to the factory.

Our warranty and protection plan does not apply to cabinets that are not registered; therefore, it is necessary that, upon completion of the installation of the cabinet, the registration card be signed on the date of installation and mailed promptly to the factory Service Department in order for the cuber to be registered.

RETURN OF HERMETICALLY-SEALED UNITS

Extreme care should be used in servicing the hermetically-sealed mechanism. It is important that the trouble be correctly determined before the unit is changed. Be sure it is not the control, relay, or overload causing the trouble. The defect must be listed on the return material tag. Hermetically-sealed units must be returned with service valves closed and capped. All lines must be pinched and soldered shut.

RETURN OF COMPLETE MACHINES

Complete machines may not be shipped back to the factory for repairs without first securing prior permission from the factory. If an unauthorized missing shipment is received at the factory it will be refused by our warehouse and immediately returned to the sender. Upon receipt of your request to return a cabinet, if we feel that your request is legitimate, you will be sent an authorized return label authorizing you to return this cabinet to the factory freight prepaid.

When returning water cooled models, make sure all water lines are blown out before returning ice cuber to prevent lines from freezing during cold weather.

SERIAL NUMBER NOMENCLATURE

STARTED JAN., 1979

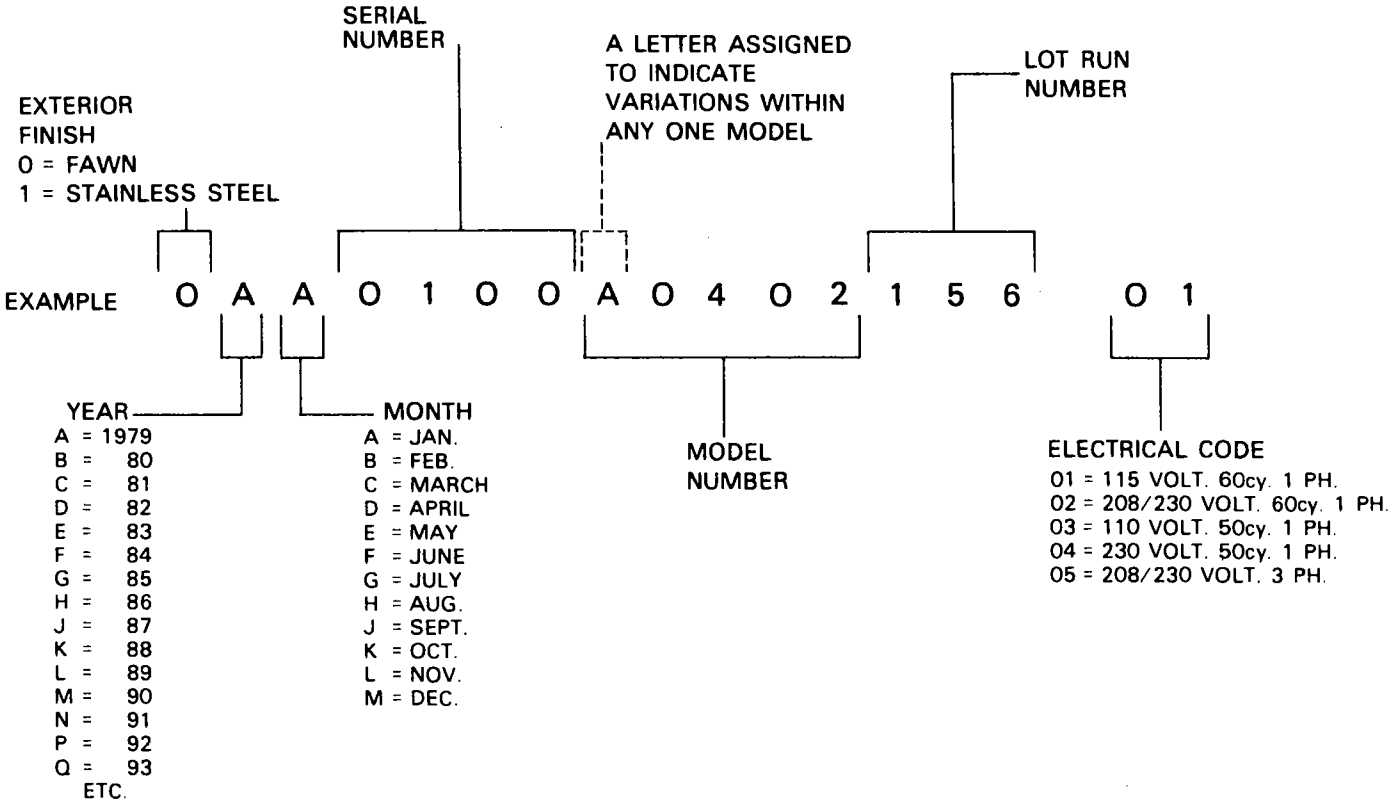

Ice Machine and Bin Warranty

From the date of original installation, we do hereby warrant each new Ice Machine and Bin to be free from defects in material and workmanship, under normal use and service, for a period of one year, and four additional years on the hermetic motor compressor in the Ice Machine.

Our obligation under this warranty is limited solely to correcting or replacing without charge at the factory in Manitowoc, Wisconsin any part or parts of this equipment which shall have been returned, transportation prepaid, and which our examination discloses to our satisfaction to be defective.

This warranty does not apply to any equipment that has been damaged by flood, fire, or suffered abuse, misuse, neglect or accident, or to any Ice Machine which has been altered so as to affect performance or reliability, except where such alteration has been accomplished with our prior written consent.

We further limit this warranty in that we shall not be held liable under this contract for any special, indirect, or consequential damages whatsoever resulting from any defect in material and workmanship which interferes with the normal use and service of such Ice Machine and Bin.

This warranty is a complete and exclusive statement of all terms of the agreement between the Manitowoc Equipment Works and the owner of the equipment, and all representations of the parties. This agreement shall not be varied, supplemented, qualified or interpreted by any prior course of dealing between the parties or by any usage of the trade.

Sales are made on the express understanding that there are no express or implied warranties other than the express warranty herein contained and that there are no implied warranties that the goods shall be merchantable or fit for a particular purpose other than the expressed one year and five year warranty set forth above.

To validate this warranty, the registration card must be signed on the date of installation and mailed promptly to the Manitowoc Equipment Works, Manitowoc, Wisconsin.

DEALER _____

_____

_____

INSTALLATION DATE _____

MANITOWOC EQUIPMENT WORKS
(A division of The Manitowoc Co., Inc.)
2110 South 26th St., Ph: 414-682-0161
Manitowoc, Wisconsin 54220

Form 80-0055-3
ALL