POWER DISTRIBUTION WIRING DIAGRAM

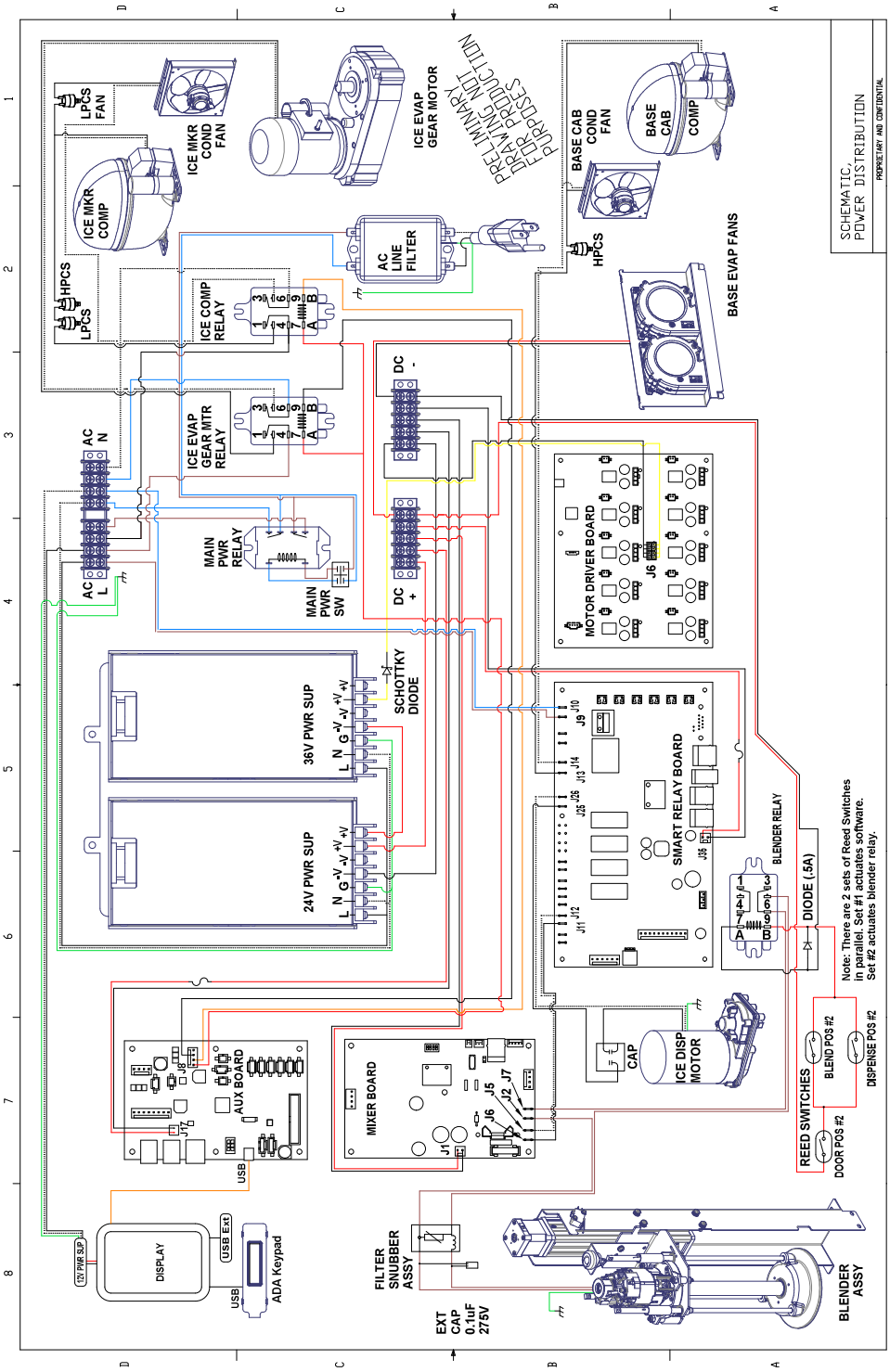
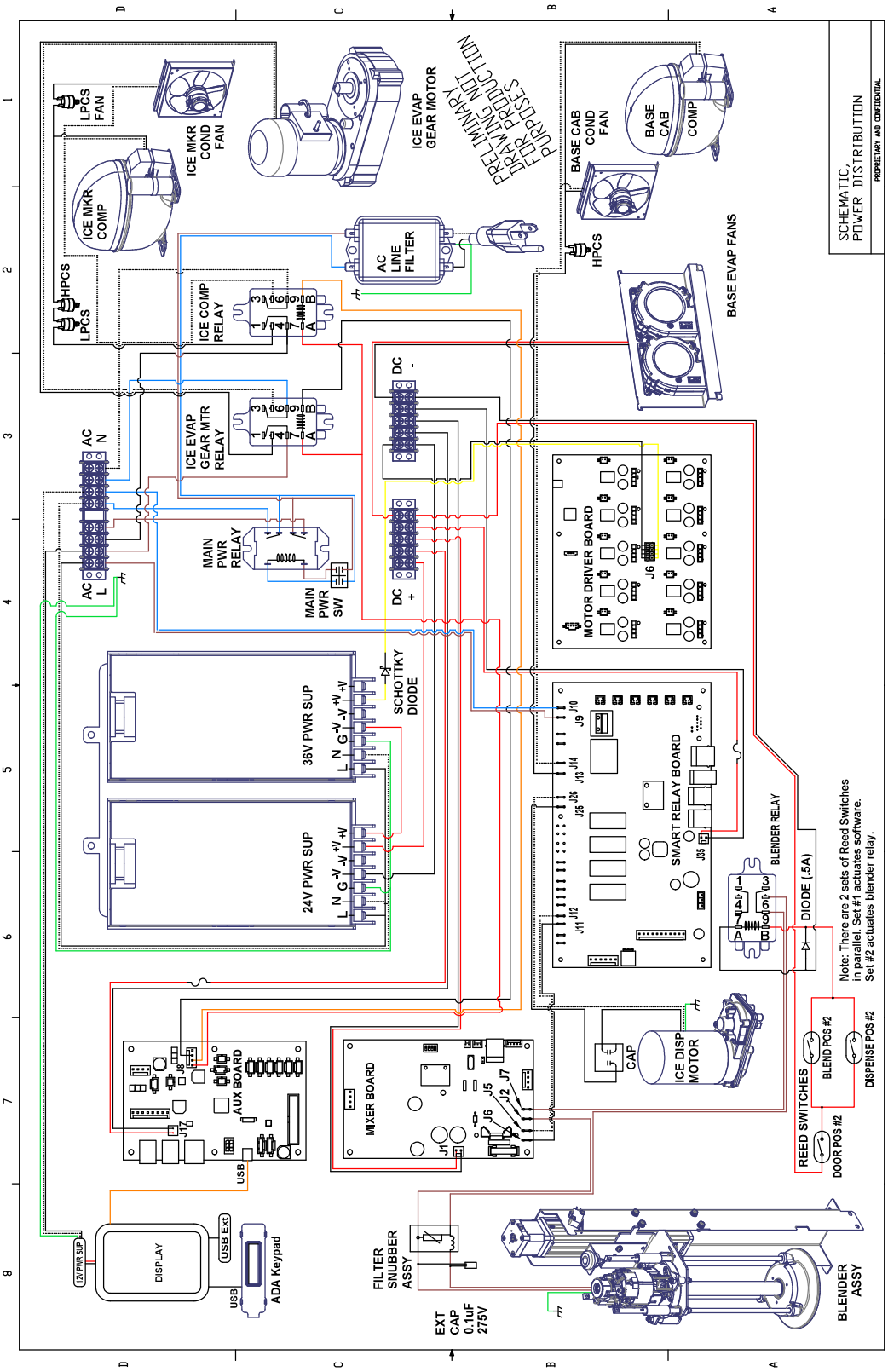
INTERCONNECT WIRING DIAGRAM