Middleby Marshall®

A MIDDLEBY COMPANY

PS536GS SERIES GAS FIRED:

SPL090205-PF-BD
September 9, 2005
Replaces PMD-15-006
Rev. B • V1 • 2/03

Parts Manual

with Wiring Diagrams for domestic and standard export ovens

Serial # Code
First 4 digits - order of production
Fifth digit - model specific
Sixth and Seventh digit - month of production
Eighth and Ninth digit - year of production

Starting Serial # 145740103 & after

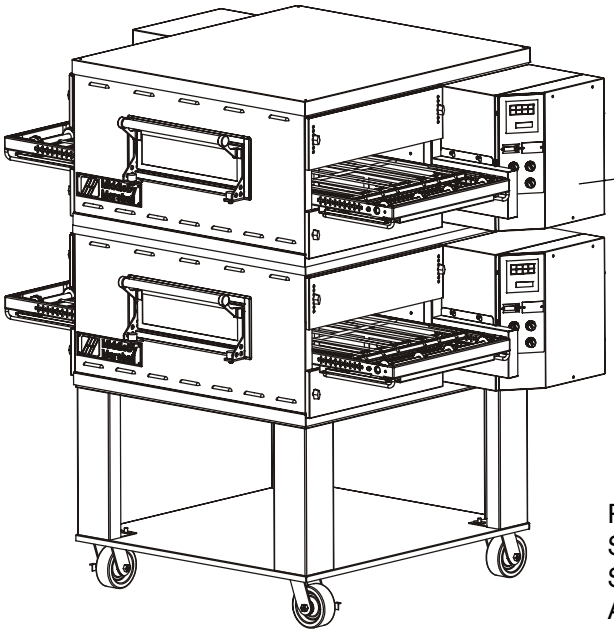

PS536GS-Double-Shown with "New Style" Front Window Assembly.

Table of Contents: Page 2

www.middleby.com
email: techsupport@middleby.com
1-847-741-3300 fax 1-847-741-4406

©2005 Middleby Marshall Inc.

Table of Contents

Spec Sheet 3
Key Parts 7
View of Installation Kit 8
Parts for Installation Kit 9
View of Panels, End Plugs and Window–Earlier Production 10
Parts for Panels, End Plugs and Window–Earlier Production ... 11
View of Panels, End Plugs and Window–Later Production 12
Parts for Panels, End Plugs and Window–Later Production 13
View of Right-hand Electrical Compartment 14
Parts for Right-hand Electrical Compartment 15
View of Left-hand Electrical & Gas Train Compartment 16
Parts for Left-hand Electrical & Gas Train Compartment 17
View of Rear Compartment and Blowers 18
Parts for Rear Compartment and Blowers 19
View of Single-Belt Conveyor 20
Parts for Single-Belt Conveyor 21
View of Split-Belt Conveyor 22
Parts for Split-Belt Conveyor 23
Standard Finger Placement and Part Numbers 24
Wiring Diagrams (electrical schematics)
208;240 volt 50/60 Hz, 1 Phase
ENG/GM/FR/SP 55553B 25
208;240 volt 50/60 Hz, 1 Phase
IT/GR/DN/DU 55551B 26

Middleby® Marshall
CONVEYORS OF EXCELLENCE

A/A File No.: _____

Item No.: _____

PS536GS

Direct Gas Fired Conveyor Oven

Principle

Middleby Marshall PS Series conveyor ovens bake both faster and at a lower temperature than other ovens. Patented vertical columns of hot air move heat aerodynamically instead of using high temperatures. The streams of hot air remove the boundary layers of cool heavy air which tend to insulate the product. This gives very rapid baking without burning. All Middleby ovens are designed to cook a multitude of products including pizza, seafood, bagels, ethnic foods and more.

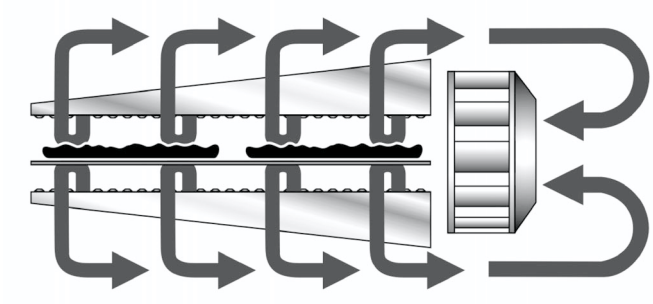

General Information

The PS536GS conveyor oven is ideally suited for Kiosk and express-style locations where smaller ovens are required.

Standard Features

- Impingement PLUS! low oven profile and dual air return
- EMS Energy Management System* reduces gas consumption and increases cooking efficiency
- 36”/914mm long cooking chamber
- 20”/508mm-wide, 60”/1524mm long conveyor belt
- Stackable up to three units high
- Patented “Jet Sweep” impingement process that delivers constant heat to the chamber
- Microprocessor-controlled bake time/conveyor speed
- Customer-specific adjustable jet fingers that allow control of heating in 8″/203mm zones
- Stainless steel front, sides, top and interior
- Enclosed front-loading window with cool handle
- Reversible conveyor direction
- Lower shelf single and double deck
- 3-30 minute bake time
- 8″ Exit tray- 60″ conveyor model
- Maximum operating temperature-550°F (288°C)
- Warmup time-25 minutes

Optional Features

- Split belt - two 9-1/2″/241mm belts with individually-adjustable speed settings
- High speed conveyor (1-10 minute bake time)
- 76″/1930mm-long conveyor

Conserves Energy

Middleby ovens provide very efficient heat transfer to product. Energy is conserved as air is recycled from heater to product, with minimum flue or vent loss.

Cleanability

PS536GS ovens are designed for easy cleaning. Removable parts include: crumb pans, end panels, air fingers, exit tray, and a removable conveyor belt assembly.

Easily Serviced

Control compartment is designed for quick and easy access.

Warranty

All PS536GS models have a one year parts and labor warranty. Oven start-up is included at no additional charge (USA only).

* *Patent pending*

Middleby® Marshall
A MIDDLEBY COMPANY
1400 Toastmaster Drive
Elgin, Illinois 60120 USA
(847) 741-3300 Fax: (847) 741-0015
www.middleby.com

Middleby® Marshall
CONVEYORS OF EXCELLENCE

PS536GS
Direct Gas Fired Conveyor Oven

Scale: Approx. 1/24 (1/2"/13mm = 1'/305mm)

NOTE: *Height dimensions are shown for standard leg extensions. Customer-specific leg extensions will affect these dimensions.*

NOTE: *All units are shown with casters. CE-approved ovens use 6"/152mm adjustable feet instead of casters.*

PS536GS-1

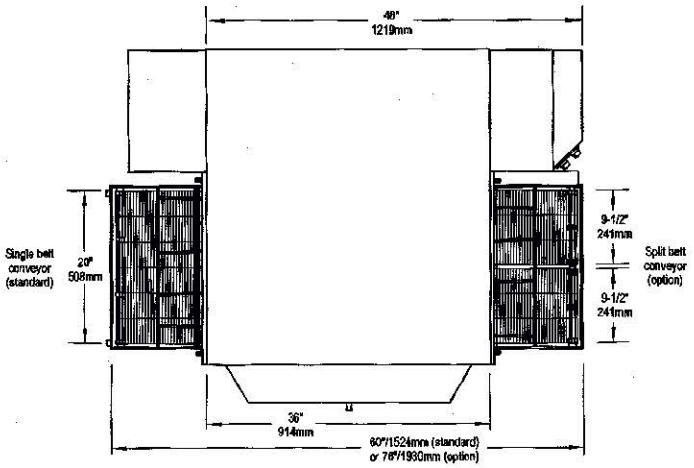

TOP VIEW

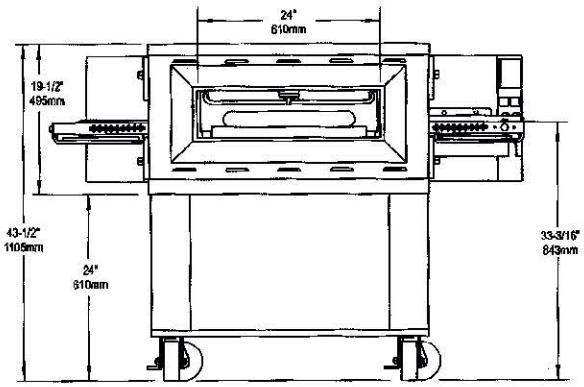

FRONT VIEW

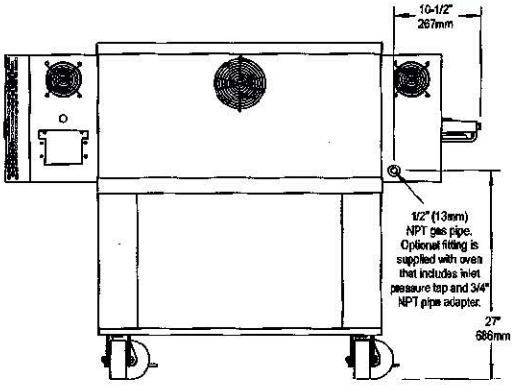

BACK VIEW

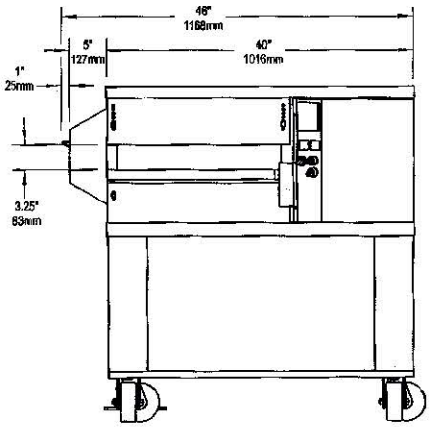

SIDE VIEW

Middleby® Marshall
CONVEYORS OF EXCELLENCE

PS536GS
Direct Gas Fired Conveyor Oven

Scale: Approx. 1/24 (1/2"/13mm = 1'/305mm)

NOTE: *Height dimensions are shown for standard leg extensions. Customer-specific leg extensions will affect these dimensions.*

NOTE: *All units are shown with casters. CE-approved ovens use 6"/152mm adjustable feet instead of casters.*

PS536GS-2

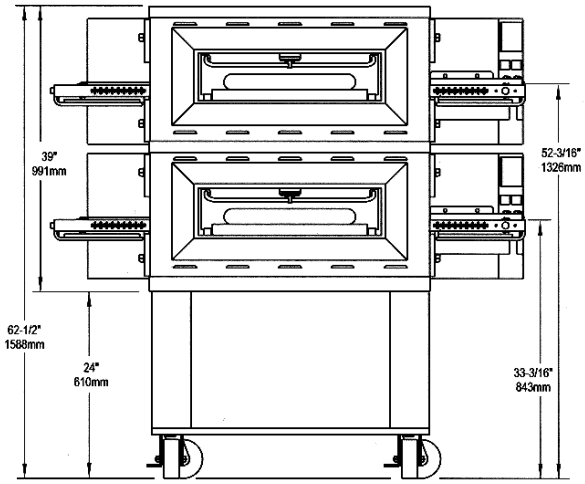

FRONT VIEW

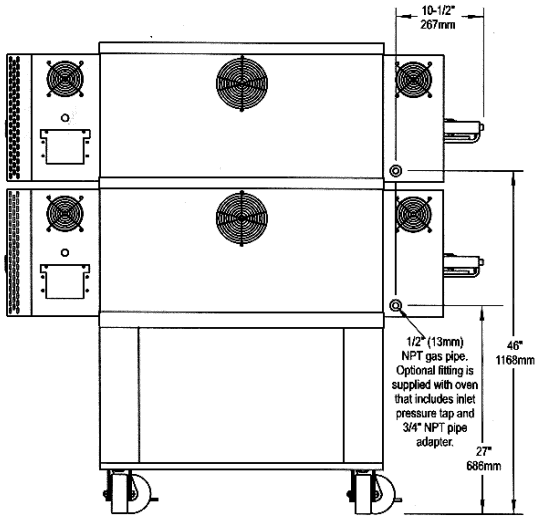

BACK VIEW

PS536GS-3

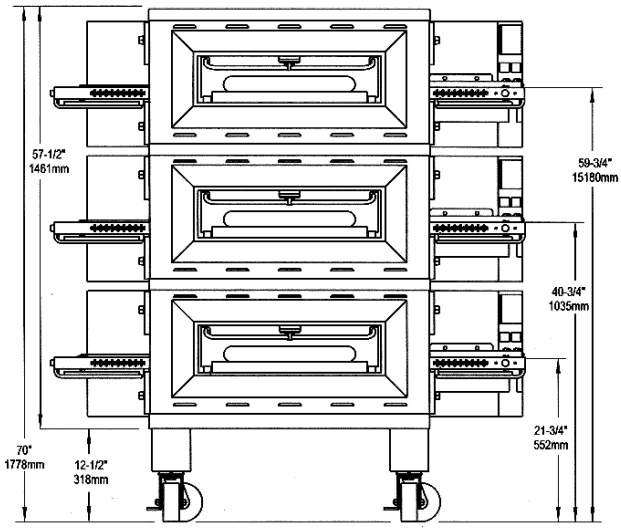

FRONT VIEW

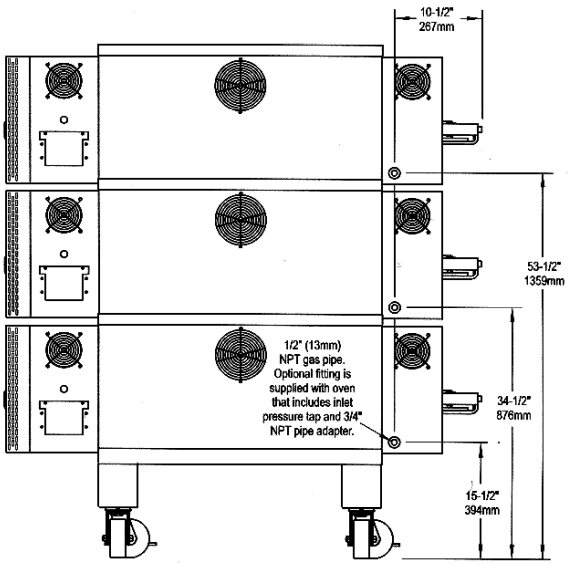

BACK VIEW

Middleby® Marshall
CONVEYORS OF EXCELLENCE

PS536GS
Direct Gas Fired Conveyor Oven

RECOMMENDED MINIMUM CLEARANCES

Rear of oven to wall	Control end of conveyor to wall	Non-control end of conveyor to wall
3" (76mm)	18" (457mm)	3" (76mm)

GENERAL INFORMATION

	Heating Zone	Baking Area	Belt Length	Belt Width	Overall Length (exit tray not installed)	Height	Depth	Maximum Operating Temp.	Bake Time Range	Ship Wt.	Ship Cube
PS536-1 with 17.5" (446mm) leg extensions	36" 914mm	5 sq. ft. 0.465m²	60" 1524mm OR 76" 1930mm	1 x 20" (508mm) OR 2 x 9-1/2" (241mm)	60" 1524mm OR 76" 1930mm	43-1/2" * 1105mm	43" 1092mm	550°F 288°C	2:40-29:50	658 lbs. 299kg	35.2 ft.³ 0.99m³
PS536-2 with 17.5" (446mm) leg extensions	72" 1828mm	10 sq. ft. 0.930m²	60" 1524mm OR 76" 1930mm	1 x 20" (508mm) OR 2 x 9-1/2" (241mm)	60" 1524mm OR 76" 1930mm	63" * 1600mm	43" 1092mm	550°F 288°C	2:40-29:50	1255 lbs. 570kg	70.4 ft.³ 1.97m³
PS536-3 with 6" (152mm) leg extensions	108" 2743mm	15 sq. ft. 1.395m²	60" 1524mm OR 76" 1930mm	1 x 20" (508mm) OR 2 x 9-1/2" (241mm)	60" 1524mm OR 76" 1930mm	71" * 1803mm	43" 1092mm	550°F 288°C	2:40-29:50	2449 lbs. 1112kg	105.6 ft.³ 2.96m³

* *Overall height is shown for standard leg extensions. Customer-specific leg extensions will affect the overall height of the oven.*

ELECTRICAL SPECIFICATIONS

Version	Voltage	Phase	Freq.	Current Draw *	Supply	Breakers
Domestic & std. export	208/240V	1	50/60 Hz	6A	2 pole, 3 wire (2 hot, 1 ground)	As per local codes

* *The current draw rating shown above is an average value for normal operation. The initial amperage draw on oven startup may exceed the listed value.*

GAS SUPPLY SPECIFICATIONS

Version	Gas Type	Supply (Inlet) Pressure	Regulated Pressure	Rated Heat Input
Domestic & std. export	Natural Gas	6-12" W.C. (14.9-29.9mbar)	4" W.C. (9.95mbar)	76,000 BTU (14.6 kW-hr.)
Domestic & std. export	Propane Gas	11-14" W.C. (27.4-34.9mbar)	10.5" W.C. (26.15mbar)	76,000 BTU (13.2 kW-hr.)

The required gas supply pressures of other locations are dependent on the local gas type and on all applicable local codes.

Minimum Gas Pipe Sizes:

- Natural Gas - 2" (51mm) main supply line. One 1/2" (12.7mm) NPT branch per oven cavity with individual full-flow shutoff valve.
- Propane Gas - 1-1/2" (38mm) main supply line. One 1/2" (12.7mm) NPT branch per oven cavity with individual full-flow shutoff valve.

ALL SPECIFICATIONS SUBJECT TO CHANGE WITHOUT NOTICE.

Middleby® Marshall
CONVEYORS OF EXCELLENCE

THE MIDDLEBY CORPORATION
THE BRAND BEHIND THE BRANDS

1400 Toastmaster Drive, Elgin, IL 60120-9272, USA • (847) 741-3300 • Fax: (847) 741-0015
www.middleby.com

Printed in U.S.A 1/03 Form 4506

KEY PARTS

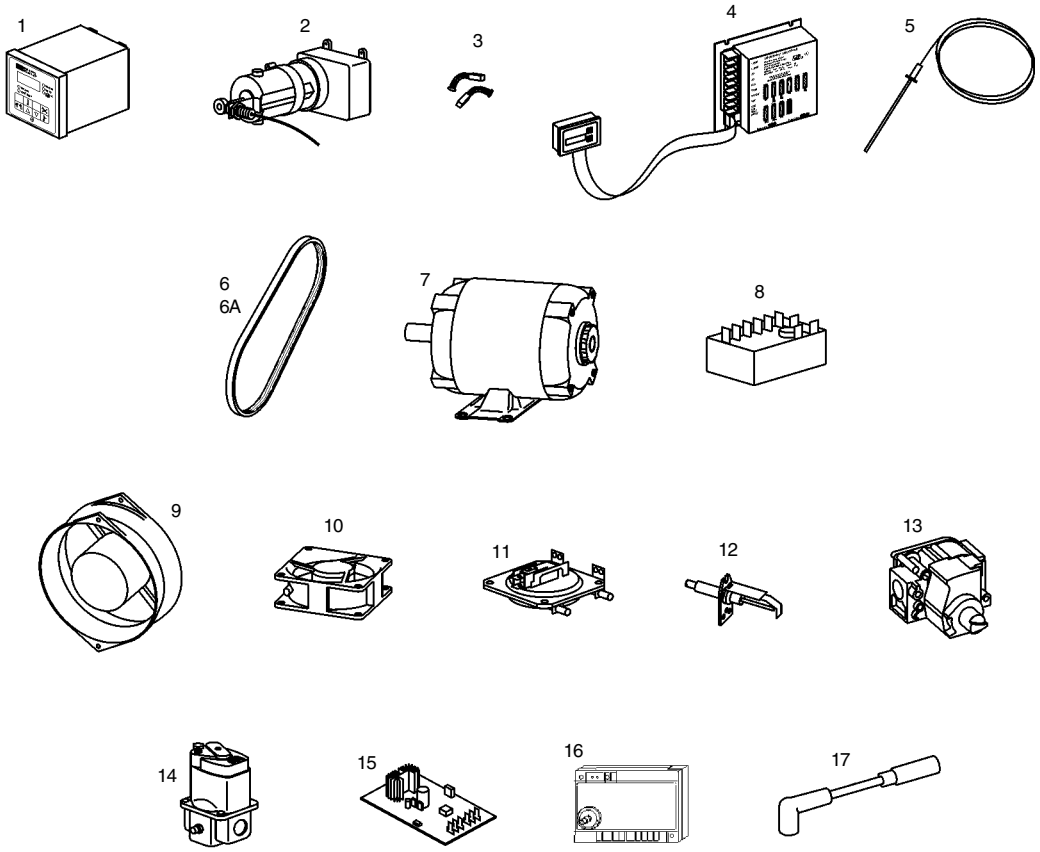

KEY PARTS

ITEM	QTY.	P/N	DESCRIPTION
1	1	47321	DIGITAL TEMPERATURE CONTROLLER
2	1	58390	CONVEYOR DRIVE MOTOR W/MAGNET
3	1	58484	KIT, 2-BRUSHES AND 2-CAPS
4	1	37337	KIT, CONVEYOR SPEED CONTROLER
5	1	33984	KIT, THERMOCOUPLE 6″
6	1	50517	BELT, BLOWER, STANDARD RPM
6A	1	51428	BELT, BLOWER, LOWER RPM
7	1	44687	MOTOR, BLOWER, 208/230V, 1/2HP
8	1	33983	HIGH LIMIT CONTROL MODULE, 240V
9	1	36451	COOLING FAN (BACKWALL)
10	1	97525	COOLING FAN (CONTROL COMPARTMENT)
11	1	54953	AIR SWITCH (REPLACES 37498)
12	1	48455	IGNITOR
13	1	52291	COMBINATION GAS CONTROL VALVE (SAFETY REGULATOR)
14	1	41647	MODULATING GAS VALVE, M420, 1/2″
15	1	31651	AMPLIFIER BOARD
16	1	50239	IGNITION MODULE
17	1	50240	IGNITION CABLE, 25″

View of INSTALLATION KIT

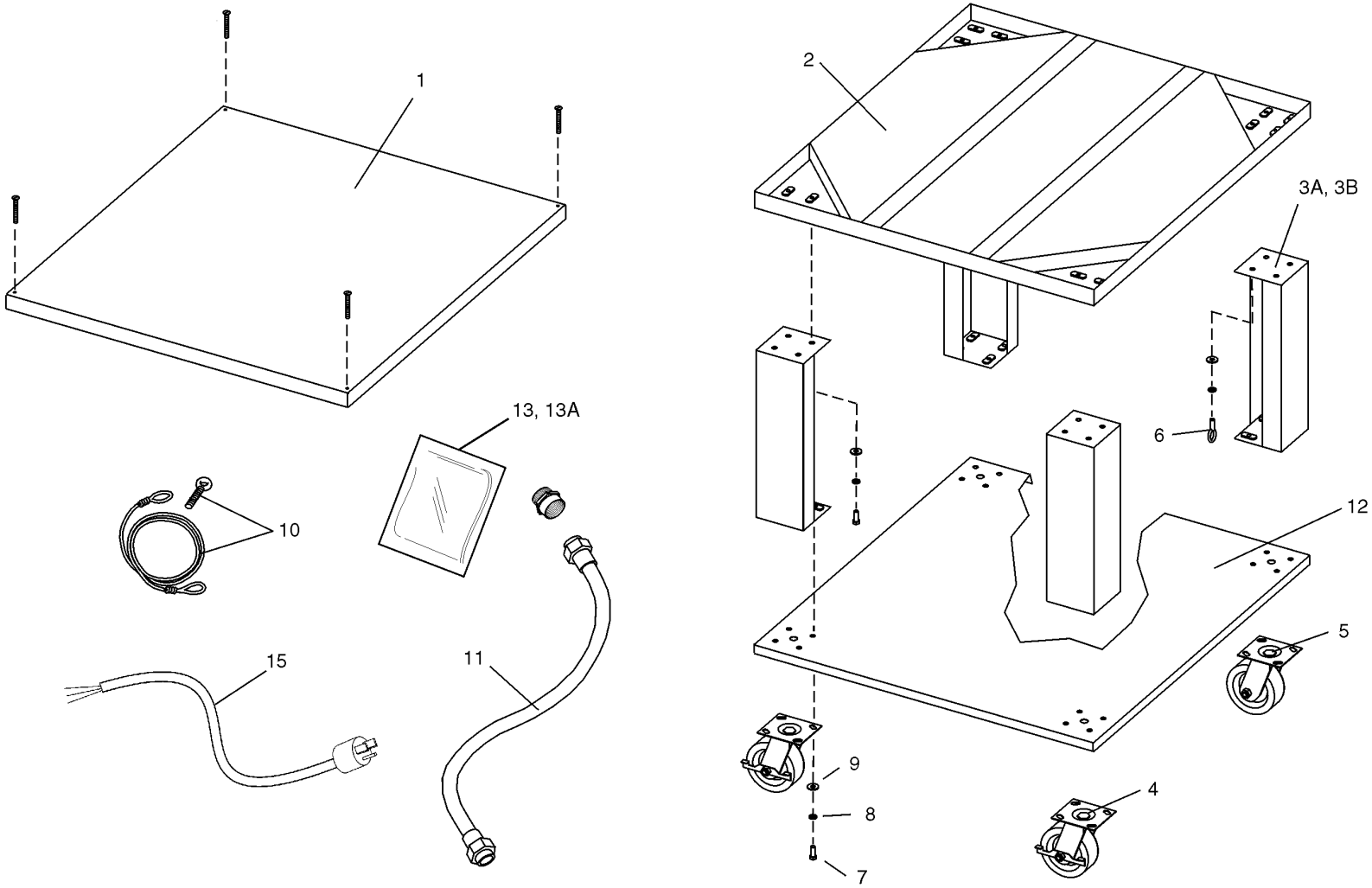

Parts for INSTALLATION KIT

ITEM	QTY. SINGLE OVEN	QTY. DOUBLE OVEN	QTY. TRIPLE OVEN	P/N	DESCRIPTION
1	1	1	1	48605	TOP PANEL
2	1	1	1	51977	BASE PAD, W/INSULATION
3A	4	4	--	42890	17-1/2" (445mm) LEG EXTENSION, FOR SINGLE AND DOUBLE OVENS
3B	--	--	4	44799	6" (152mm) LEG EXTENSION, FOR TRIPLE OVENS
4	2	2	2	22290-0009	CASTER, WITH FLAT PLATE AND BRAKE
5	2	2	2	22290-0010	CASTER, WITH FLAT PLATE (NO BRAKE)
6	1	1	1	21392-0004	EYEBOLT, 3/4"
7	31	31	31	220373	HEX BOLT, 3/8"-16 x 1"
8	32	32	32	21416-0001	FLAT WASHER, 3/8"
9	32	32	32	21422-0001	LOCKWASHER, 3/8"
10	1	1	1	22450-0228	RESTRAINT CABLE ASSEMBLY
11	1	2	3	22361-0001	GAS HOSE, *3/4″ to 1/2″ Gas hose reducer included with gas hose.*
12	1	1	--	46393	LOWER SHELF - (LIP DOWN POSITION)
13	1	2	3	50276	KIT, LP - (NATURAL GAS TO LP)
13A	1	2	3	50793	KIT, NATURAL GAS - (LP TO NATURAL GAS)
14	1	2	3	M2841	FITTING, PRESSURE TAP (NOT SHOWN)
15	1	2	3	49975	TWIST LOCK PLUG (6-20P) - WITH 6 FOOT CORD

View of PANELS, END PLUGS and WINDOW–Earlier Production (Front Window Change Used Before March, 2004)

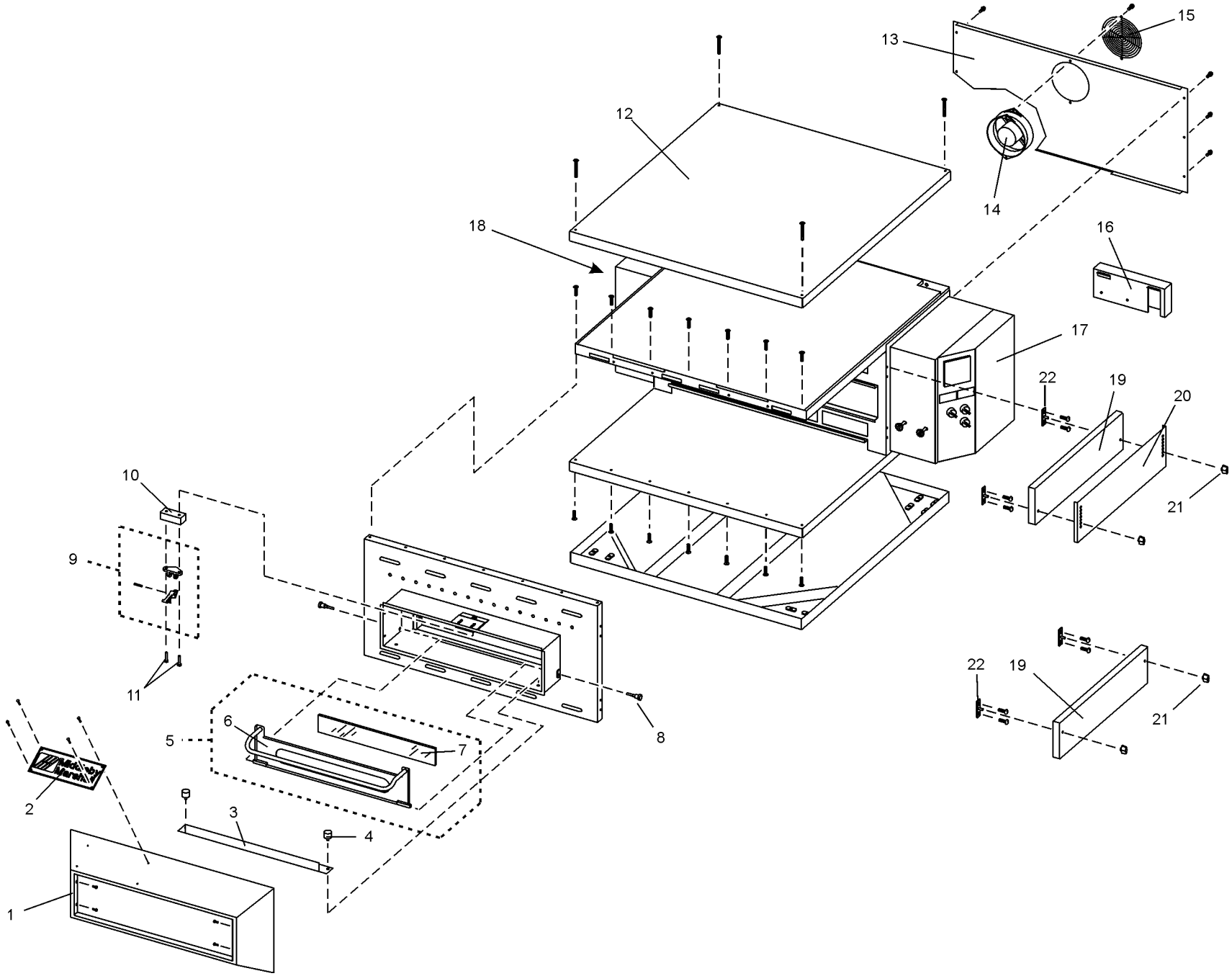

PANELS, END PLUGS and WINDOW–Earlier Production (Front Window Change Used Before March, 2004)

ITEM	QTY.	P/N	DESCRIPTION
1	1	50172	WINDOW SHROUD
2	1	22500-0021	NAMEPLATE, "MIDDLEBY MARSHALL"
3	1	48437	HEAT GUARD PLATE
4	2	30927	BUMPER
5	1	48512	ASSEMBLY, WINDOW (INC. ITEMS 6-7)
6	1	47611	WINDOW FRAME WITH HANDLE
7	1	47837	WINDOW GLASS, PRE-CUT, 2.59″ X 18″
8	2	34121-0003	PIVOT SCREW
9	1	49920	WINDOW LATCH ASSEMBLY
10	1	49921	SPACER BLOCK
11	2	18A1S19	SCREW, HEX HD 1/4"-20 X 1"
12	1	48605	TOP PANEL
13	1	47633	BACK WALL
14	1	36451	COOLING FAN
15	1	31497	FINGER GUARD, COOLING FAN
16	1	*See pp. 20-23*	CHAIN COVER, UPPER
17	1	49938	DOOR, CONTROL COMPARTMENT-FOR OVENS WITH RIGHT-SIDE CONTROLS
18	1	48687	DOOR, MACHINERY COMPARTMENT-FOR LEFT-SIDE
19a	2	43252	END PLUG, TOP
19b	2	43252	END PLUG, BOTTOM
20	2	42771	SLIDE, OUTER SIDE
21	8	36452	WING NUT, PLASTIC
22	8	45449	BRACKET, END PLUG MOUNTING

PANELS, END PLUGS WITHOUT WINDOW–Earlier Production

ITEM	QTY.	P/N	DESCRIPTION
2	1	22500-0021	NAMEPLATE, "MIDDLEBY MARSHALL"
11	2	18A1S19	SCREW, HEX HD 1/4"-20 X 1"
12	1	48605	TOP PANEL
13	1	47633	BACK WALL
14	1	36451	COOLING FAN
15	1	31497	FINGER GUARD, COOLING FAN
16	1	*See pp. 20-23*	CHAIN COVER, UPPER
17a	1	49938	DOOR, CONTROL COMPARTMENT-FOR OVENS WITH RIGHT-SIDE CONTROLS
17b	1	*Not available*	DOOR, CONTROL COMPARTMENT-FOR OVENS WITH LEFT-SIDE CONTROLS
18a	1	48687	DOOR, MACHINERY COMPARTMENT-FOR OVENS WITH RIGHT-SIDE CONTROLS
18b	1	*Not available*	DOOR, MACHINERY COMPARTMENT-FOR OVENS WITH LEFT-SIDE CONTROLS
19a	2	43252	END PLUG, TOP
19b	2	43252	END PLUG, BOTTOM
20	2	42771	SLIDE, OUTER SIDE
21	8	36452	WING NUT, PLASTIC
22	8	45449	BRACKET, END PLUG MOUNTING

View of PANELS, END PLUGS and WINDOW–Later Production (Front Window Change Used After March, 2004)

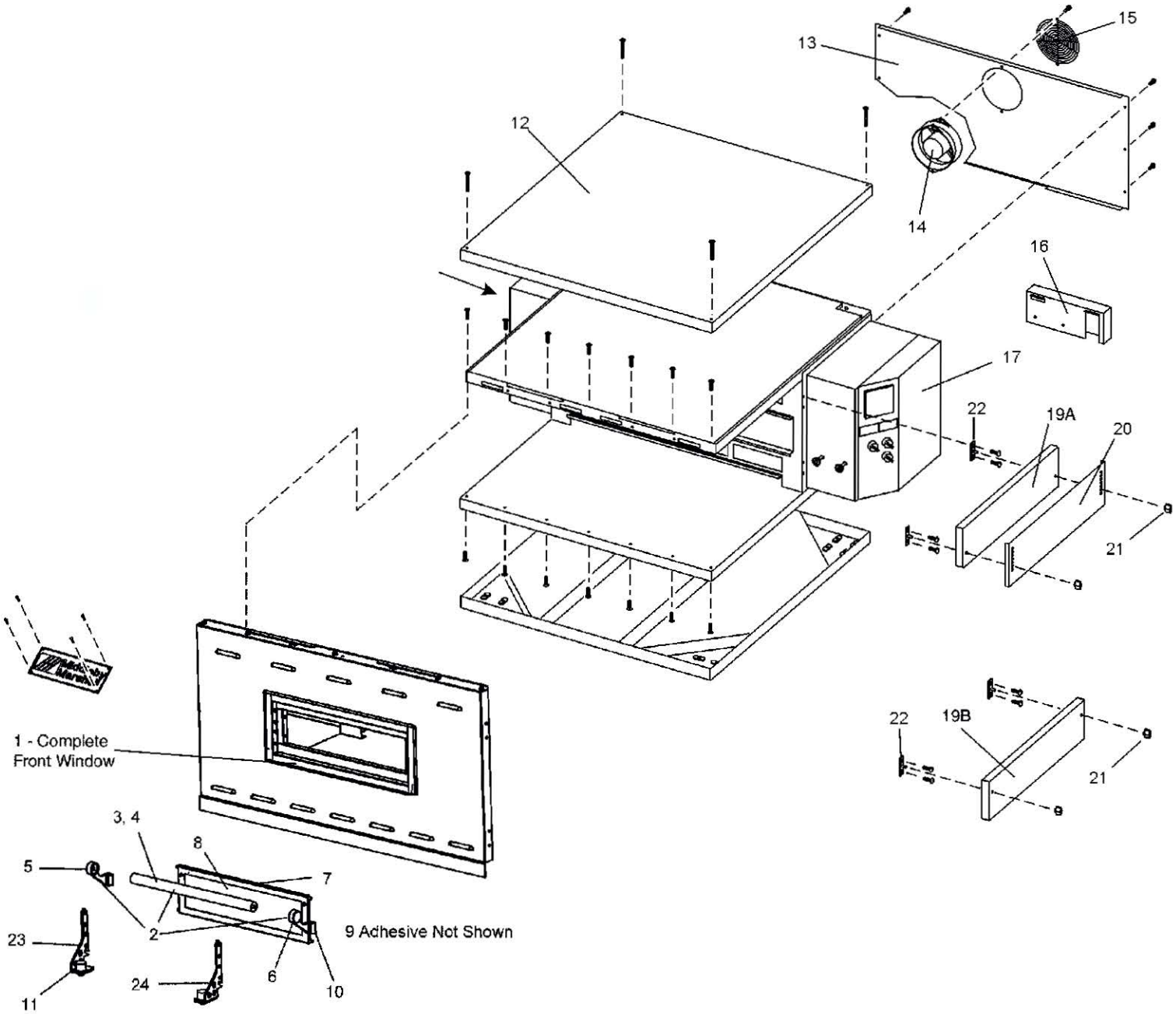

PANELS, END PLUGS and WINDOW–Later Production (Front Window Change Used After March, 2004)

ITEM	QTY.	P/N	DESCRIPTION
1	1	51054	ASSEMBLY ,WINDOW, w/HANDLE, ITEMS 1-10
2	1	51081	ASSEMBLY, HANDLE, ITEMS 3-6
3	1	M10092	HANDLE, OUTER
4	1	M10127	HANDLE, INNER THREADED
5	1	M1115	HANDLE, BRACKET (LEFT)
6	1	M1116	HANDLE, BRACKET (RIGHT)
7	1	51087	FRAME AND WINDOW, ITEMS 8-9
8	1	M10198	GLASS, 4.1″ X 15.150″
9	1	M1965	ADHESIVE (NOT SHOWN)
10	2	M1118	SCREW–ATTACHES HANDLE
11	2	30927	BUMPER
12	1	48605	TOP PANEL

ITEM	QTY.	P/N	DESCRIPTION
13	1	47633	BACK WALL
14	1	36451	COOLING FAN
15	1	31497	FINGER GUARD, COOLING FAN
16	1	*See pp. 20-23*	CHAIN COVER, UPPER
17	1	49938	DOOR, CONTROL COMPARTMENT-FOR OVENS WITH RIGHT-SIDE CONTROLS
19A	2	50161	END PLUG, TOP
19B	2	48622	END PLUG, BOTTOM
20	2	42771	SLIDE, OUTER SIDE
21	8	36452	WING NUT, PLASTIC
22	6	48640	BRACKET, END PLUG MOUNTING
23	1	51210	BRACKET, WINDOW HINGE (LEFT)
24	1	51211	BRACKET, WINDOW HINGE (RIGHT)

View of Right-hand Electrical Compartment

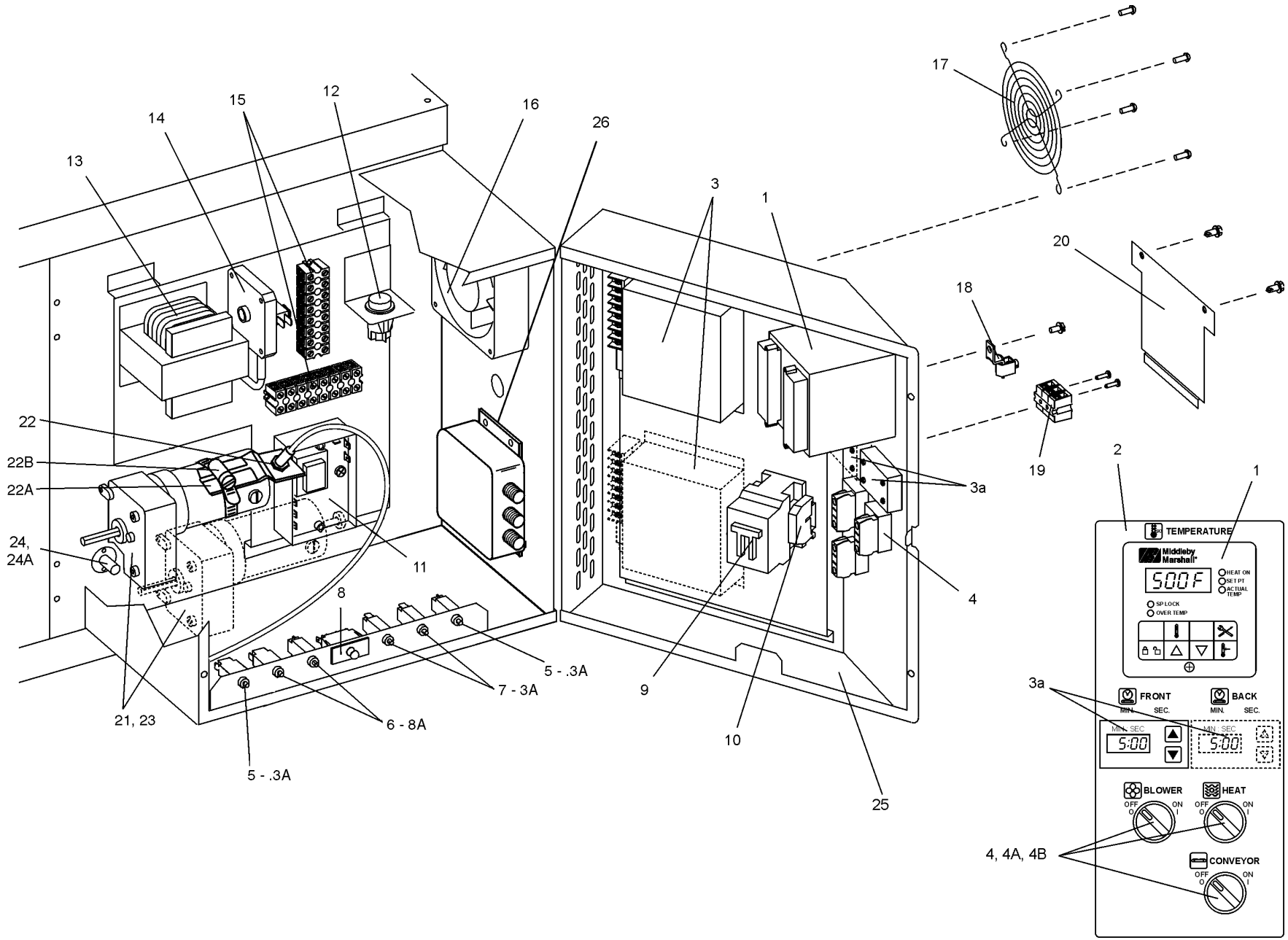

Parts for Right-hand Electrical Compartment

ITEM	QTY. SINGLE BELT	QTY. SPLIT BELT	P/N	DESCRIPTION
1	1	1	47321	DIGITAL TEMPERATURE CONTROLLER
2	1	1	48511	DECAL, CONTROL PANEL
3	1	2	37337	KIT, CONVEYOR SPEED CONTROLLER WITH DIGITAL DISPLAY (INC. ITEM 3A)
3A	1	2	37503	DIGITAL DISPLAY ONLY
4	3	3	46521	KIT, SELECTOR SWITCH WITH KNOB AND CONTACT BLOCK
4A	3	3	44697	CONTACT BLOCK
4B	3	3	44696	SELECTOR SWITCH
5	1	2	48635	CIRCUIT BREAKER, 0.3A (DRIVE MOTORS)
6	2	2	46831	CIRCUIT BREAKER, 8A (BLOWER MOTORS)
7	2	2	45036	CIRCUIT BREAKER, 3A (CONTROL CIRCUIT)
8	1	1	28021-0047	SAFETY SWITCH
9	1	1	28041-0011	CONTACTOR
10	2	2	33363	END STOP, CONTACTOR
11	1	1	33983	HIGH LIMIT CONTROL MODULE, 240V
12	1	1	35145	RESET SWITCH, HIGH LIMIT
13	1	1	31504	TRANSFORMER, 230V PRI : 120V SEC, 200VA
14	1	1	54953	AIR SWITCH (REPLACES 37498)
15	2	2	31047	TERMINAL BLOCK, 8-POLE USED ON EARLIER VERSION)

ITEM	QTY. SINGLE BELT	QTY. SPLIT BELT	P/N	DESCRIPTION
16	1	1	97525	COOLING FAN, 230V
17	1	1	27470-0004	FINGER GUARD, COOLING FAN
18	1	1	F716A8701	GROUND LUG
19	1	1	44390	TERMINAL BLOCK, 3-POLE
20	1	1	49977	COVER PLATE, TERMINAL BLOCK ACCESS
21	1	2	51067	ASSEMBLY-MOTOR, CONVEYOR DRIVE WITH SENSOR
22	1	2	22450-0249	SENSOR PICKUP
22A	1	2	22450-0248	BRACKET-PICKUP SENSOR
22B	1	2	220416	CLAMP-SECURES BRACKET
23	1	2	58390	MOTOR, CONVEYOR DRIVE WITH 2-POLE MAGNET
23A	1	2	39002	MAGNET 2-POLE
23B	1	2	310-0017	ADHESIVE
23C	1	2	300-2757	CONVEYOR DRIVE MOTOR-ONLY
23D	1	2	58484	KIT, 2 BRUSHES & 2 CAPS
23E	2	4	30153	BRUSH, SOLD INDIVIDUALLY, QTY 2 REQUIRED
24	1	1	33984	KIT, THERMOCOUPLE
24A	1	1	33812-1	THERMOCOUPLE
25	1	1	49938	DOOR, CONTROL COMPARTMENT, FOR RIGHT-SIDE
26	1	1	33813	RFI FILTER

View of Left-hand Electrical and Gas Train Compartment

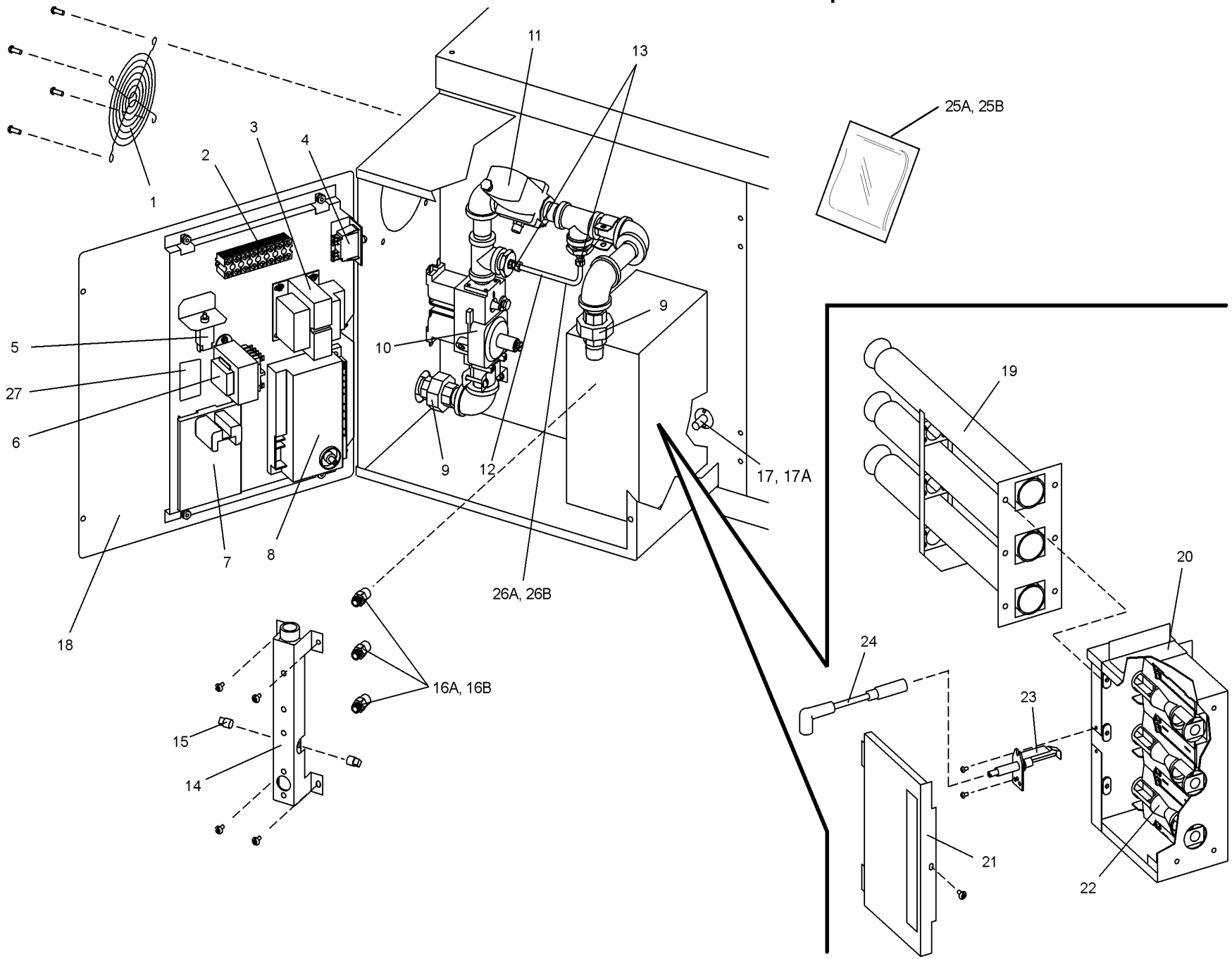

Parts for Left-hand Electrical and Gas Train Compartment

ITEM	QTY.	P/N	DESCRIPTION
1	1	27470-0004	FAN GUARD *NOTE: The oven does NOT have a cooling fan in this location. The opening provides passive cooling only.*
2	1	31047	TERMINAL BLOCK, 8-POLE-EARLIER VERSIONS
3	1	32108	TRANSFORMER, 240V PRI : 24V SEC, 65VA
4	1	28021-0047	SAFETY SWITCH
5	1	45644	CIRCUIT BREAKER, 1A
6	1	41872	TRANSFORMER, 240V PRI : 24V SEC, 25VA
7	1	31651	AMPLIFIER BOARD
8	1	50239	IGNITION MODULE-24VAC
9	2	23051-0003	UNION, 1/2" PIPE
10	1	52291	COMBINATION GAS CONTROL VALVE (SAFETY REGULATOR)
11	1	41647	MODULATING GAS VALVE, M420, 1/2"
12	A/R	48740	TUBE, ALUMINUM, 1/4" (6.35mm) O.D. (BULK)
13	2	44888	COMPRESSION FITTING, 1/4" TUBE
14	1	49940	MANIFOLD
15	2	30002	TAP PLUG
16A	3	44984	ORIFICE, MAIN, NATURAL GAS 0.0935" (2.3749mm, #42 DRILL)
16B	3	47320	ORIFICE, MAIN, PROPANE 0.0595" (1.5113mm, #54 DRILL)

ITEM	QTY.	P/N	DESCRIPTION
17	1	33984	KIT, THERMOCOUPLE
17A	1	33812-1	THERMOCOUPLE
18	1	48687	DOOR, MACHINERY COMPARTMENT-FOR LEFT-SIDE
19	1	48489	ASSEMBLY, BURNER TUBES
20	1	49955	HOUSING, INSHOT BURNERS
21	1	47654	COVER PLATE, INSHOT BURNER HOUSING
22	3	44983	BURNER, INSHOT
23	1	48455	IGNITOR
24	1	50240	IGNITION CABLE, 25" (635mm)
25A	1	50276	KIT, LP (INCLUDES ITEMS 16B & 26B)
25B	1	50793	KIT, NAT GAS (INCLUDES ITEMS 16A & 26A)
NOT SHOWN:			
26A	1	49951	ORIFICE, BYPASS, NATURAL GAS 0.0810" (2.0574mm, #46 DRILL)
26B	1	49948	ORIFICE, BYPASS, PROPANE 0.0520" (1.3208mm, #55 DRILL)
27	1	50794	IGNITION RELAY

View of Rear Compartment and Blowers

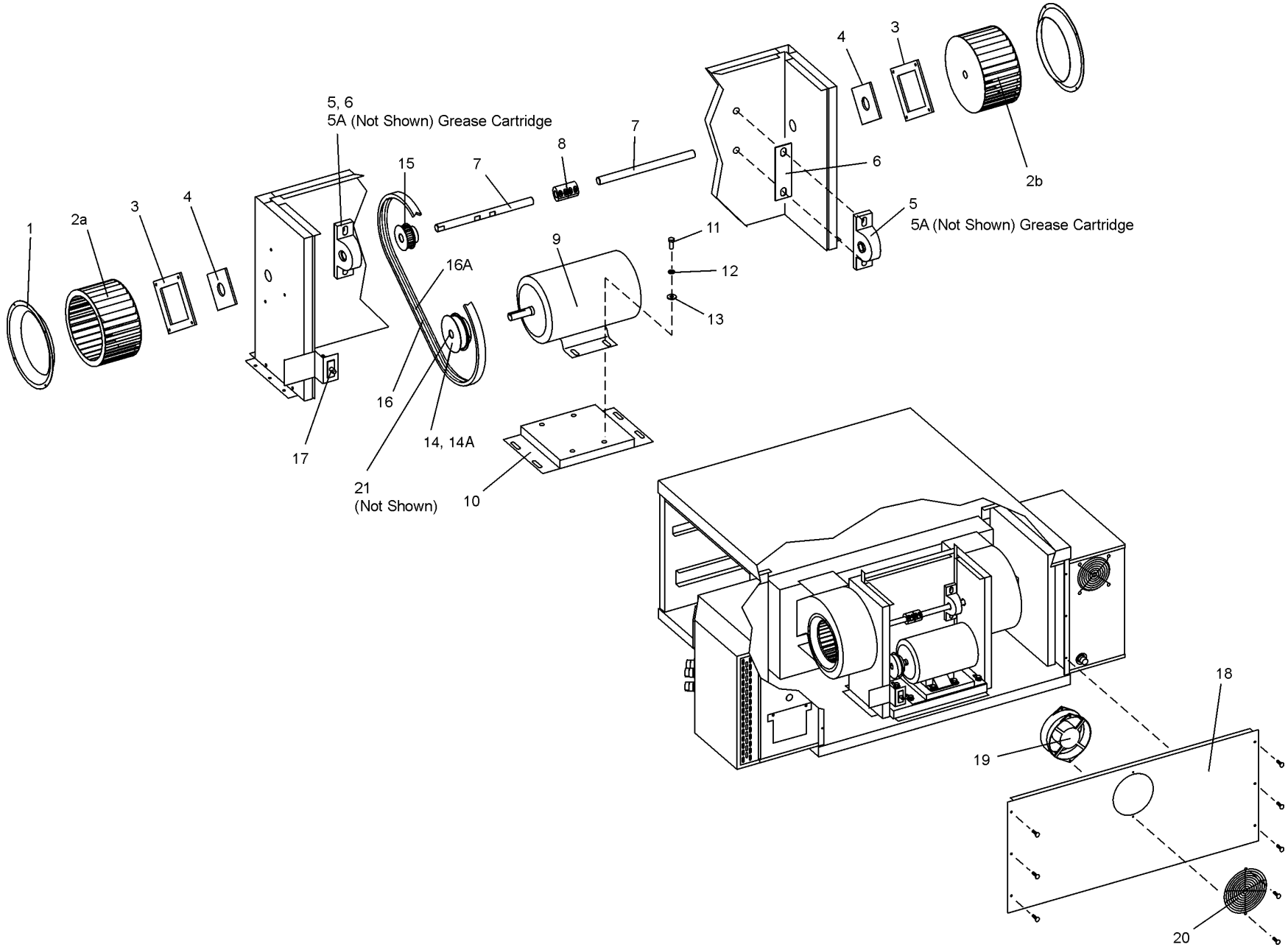

Parts for Rear Compartment and Blowers

ITEM	QTY.	P/N	DESCRIPTION
1	2	42951	INLET RING
2a	1	42752	BLOWER WHEEL, RIGHT (VIEWED FROM REAR OF OVEN-LEFT HAND)
2b	1	42753	BLOWER WHEEL, LEFT (VIEWED FROM REAR OF OVEN-RIGHT HAND)
3	2	42999	RETAINER, PTFE SEAL
4	2	35121-0045	PTFE SEAL
5	2	22072-0025	BEARING, 5/8" BORE WITH STANDARD GREASE
5A	--	17110-0015	GREASE, MM STANDARD CARTRIDGE
6	2	50160	SHIM, BEARING
7	2	50151	BLOWER SHAFT
8	1	44748	COUPLING, BLOWER SHAFT
9	1	44687	MOTOR, BLOWER, 208/230V, 1/2HP
10	1	44688	PLATE, MOTOR MOUNTING

ITEM	QTY.	P/N	DESCRIPTION
11	4	A3896	SCREW, HEX CAP HEAD 5/16"-18 X 7/8"
12	4	B301A8847	FLAT WASHER, 5/16"
13	4	A3682	LOCK WASHER, 5/16"
14	1	50260	PULLEY-MOTOR (STANDARD RPM) 2.487" DIA.
14A	1	50224*	PULLEY-MOTOR (LOWER RPM) 1.80" DIA.
15	1	50224*	PULLEY, BLOWER SHAFT 1.80" DIA.
16	1	50517*	BELT, (50/60Hz) (STANDARD RPM)
16A	1	51428*	BELT (LOWER RPM)
17	1	28021-0061	SAFETY SWITCH
18	1	47633	BACK WALL
19	1	36451	COOLING FAN
20	1	31497	FINGER GUARD, COOLING FAN
21	1	50259*	BUSHING (STANDARD RPM)-SPLIT TAPER

* SEE BELOW

RPM	RPM KIT P/N	OVEN MODEL	HERTZ	MOTOR PULLEY W/SPLIT BUSHING	MTR PULLEY P/N SPLIT BUSH P/N	BLWR SHAFT PULLEY DESCRIPTION	BLWR SHAFT PULLEY	BELT SIZE DESCRIPTION	BELT P/N	RPM OF FAN
STD	50256	PS536GS	60 50	POLY G BUSHING	50260 50259	POLY V	50224	POLY V	50517	2400 1950
LOWER	51427	PS536GS	60	POLY V	50224	POLY V	50224	POLY V	51428	1725

View of Single-Belt Conveyor - Standard Speed (3-30 Minutes), High Speed (1-10 minutes)

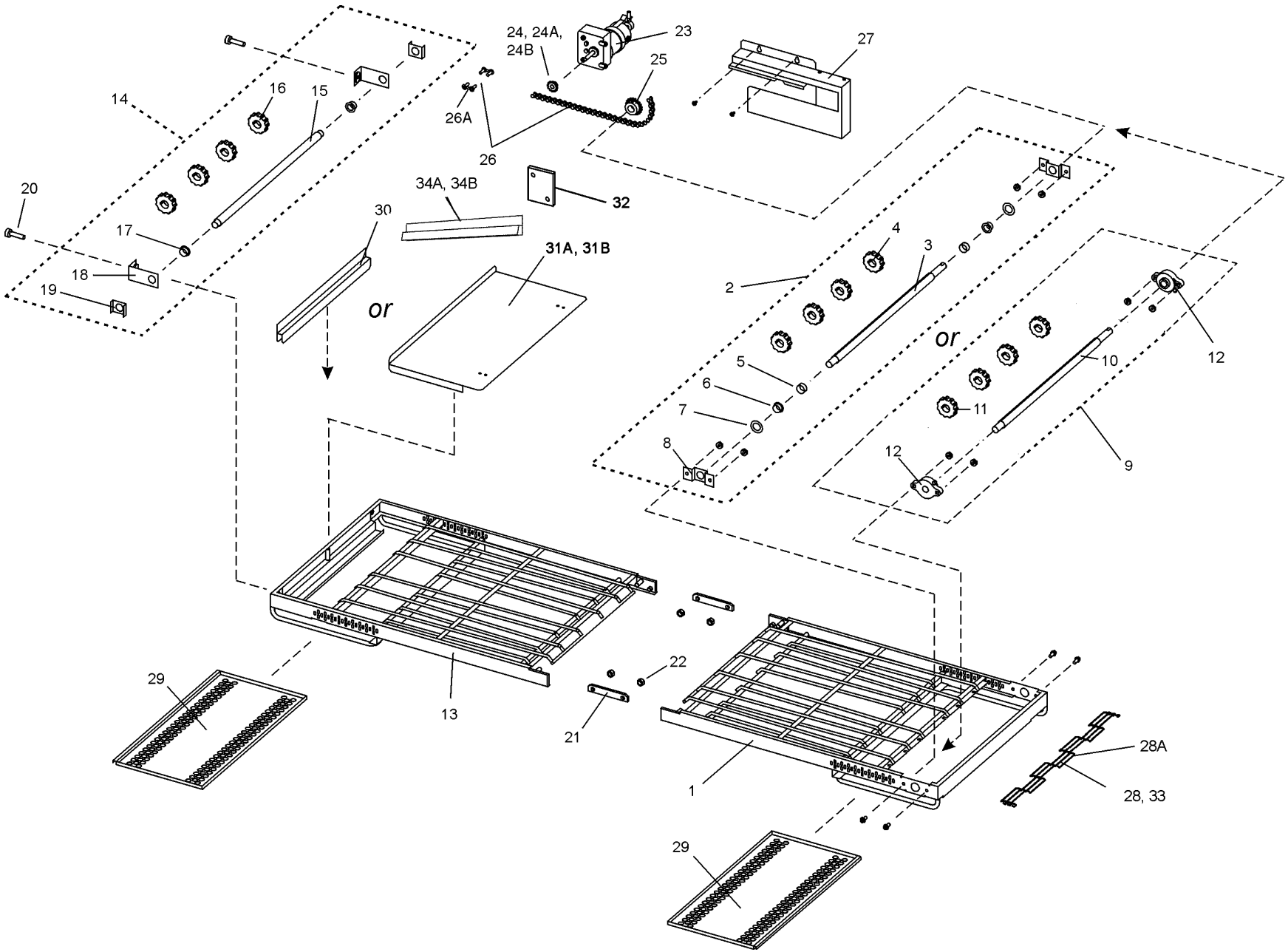

Parts for Single-Belt Conveyor - Standard Speed (3-30 Minutes), High Speed (1-10 minutes)

ITEM	QTY.	P/N - 60" CONVEYOR	P/N - 76" CONVEYOR	DESCRIPTION
1	1	48847	48790	FRAME, DRIVE SIDE
2	1	< - - - - 48797	- - - - >	ASSEMBLY, STANDARD DRIVE SHAFT (INC. ITEMS 3-8)
3	1	< - - - - 48781	- - - - >	DRIVE SHAFT
4	4	< - - - - 22229-0003	- - - - >	SPROCKET, CONV. BELT
5	2	< - - - - 43275	- - - - >	SPACER
6	2	< - - - - 22034-0003	- - - - >	BUSHING, BRONZE 5/8" I.D.
7	2	< - - - - 35000-1080	- - - - >	SPACER, NYLON
8	2	< - - - - 49972	- - - - >	BRACKET, DRIVE SUPPORT
9	1	< - - - - 48782	- - - - >	ASSEMBLY, HIGH SPEED DRIVE SHAFT (INC. ITEMS 10-11)
10	1	< - - - - 48781	- - - - >	DRIVE SHAFT
11	4	< - - - - 22229-0003	- - - - >	SPROCKET, CONV. BELT
12	2	< - - - - 45377	- - - - >	FLANGE BEARING (HIGH SPEED ONLY)
13	1	48746	48795	FRAME, IDLER SIDE
14	1	48780	48780	ASSEMBLY, IDLER SHAFT (INC. ITEMS 15-19)
15	1	< - - - - 48779	- - - - >	IDLER SHAFT
16	4	< - - - - 22229-0003	- - - - >	SPROCKET, CONV. BELT
17	2	< - - - - 22034-0003	- - - - >	BUSHING, BRONZE 5/8" I.D.
18	2	37000-0413	37000-0413	BRACKET, IDLER ADJUSTMT.
19	2	< - - - - 54947	- - - - >	BRACKET, IDLER SUPPORT
20	2	35000-1008	35000-1008	SCREW, IDLER ADJUSTMENT
21	2	< - - - - 50792	- - - - >	PIVOT PLATE
22	4	< - - - - 21176-0002	- - - - >	LOCKNUT, HEX 3/8"-16 SS

ITEM	QTY.	P/N - 60" CONVEYOR	P/N - 76" CONVEYOR	DESCRIPTION
23		SEE PAGES 14 & 15		ASSEMBLY, CONVEYOR MOTOR AND PICKUP (INC. ITEM 23a)
23A		SEE PAGES 14 & 15		PICKUP
24	1	< - - - - 34128	- - - - >	SPROCKET, CONVEYOR DRIVE MOTOR, 20T (STANDARD SPEED) .317 BORE
24A	1	< - - - - 38215	- - - - >	SPROCKET, 22T (HIGH SPEED) .314 BORE
24B	1	< - - - - 34129	- - - - >	SPROCKET, 12T .314 BORE (EARLY MODELS)
25	1	< - - - - 22159-0003	- - - - >	SPROCKET, SHAFT DRIVE SHAFT, 20T 5/8 BORE
26	1	50050	50052	ASSEMBLY, DRIVE CHAIN (INC. ITEM 26a)
26A	1	< - - - - 3101212	- - - - >	MASTER LINK, DRIVE CHAIN
27	1	48851	50029	ASSEMBLY, CHAIN COVER-FOR OVENS WITH RIGHT-SIDE CONTROLS
28	1	50057	50059	BELT, CONVEYOR, 18"/457mm, STANDARD
28A	A/R	< - - - - 8500236	- - - - >	12" SECTION OF BELT
29	2	48707	48708	CRUMB PAN W/HOLES, ENTRANCE & EXIT
30	1	50044	50044	END STOP
31A	1	50040	50040	EXIT TRAY, 8"/203mm
31B	1	50023	50023	EXIT TRAY, 20"/508mm
32	1	50235	50235	PLATE MOTOR COVER ASSY
33	1	58391	58391	KIT, MASTER LINK
34A	1	30830	30830	SIDE STOP, LEFT
34B	1	30796	30796	SIDE STOP, RIGHT (NOT SHOWN)

Page 20
line.

View of Split Belt Conveyor - Standard Speed (3-30 Minutes), High Speed (1-10 minutes)

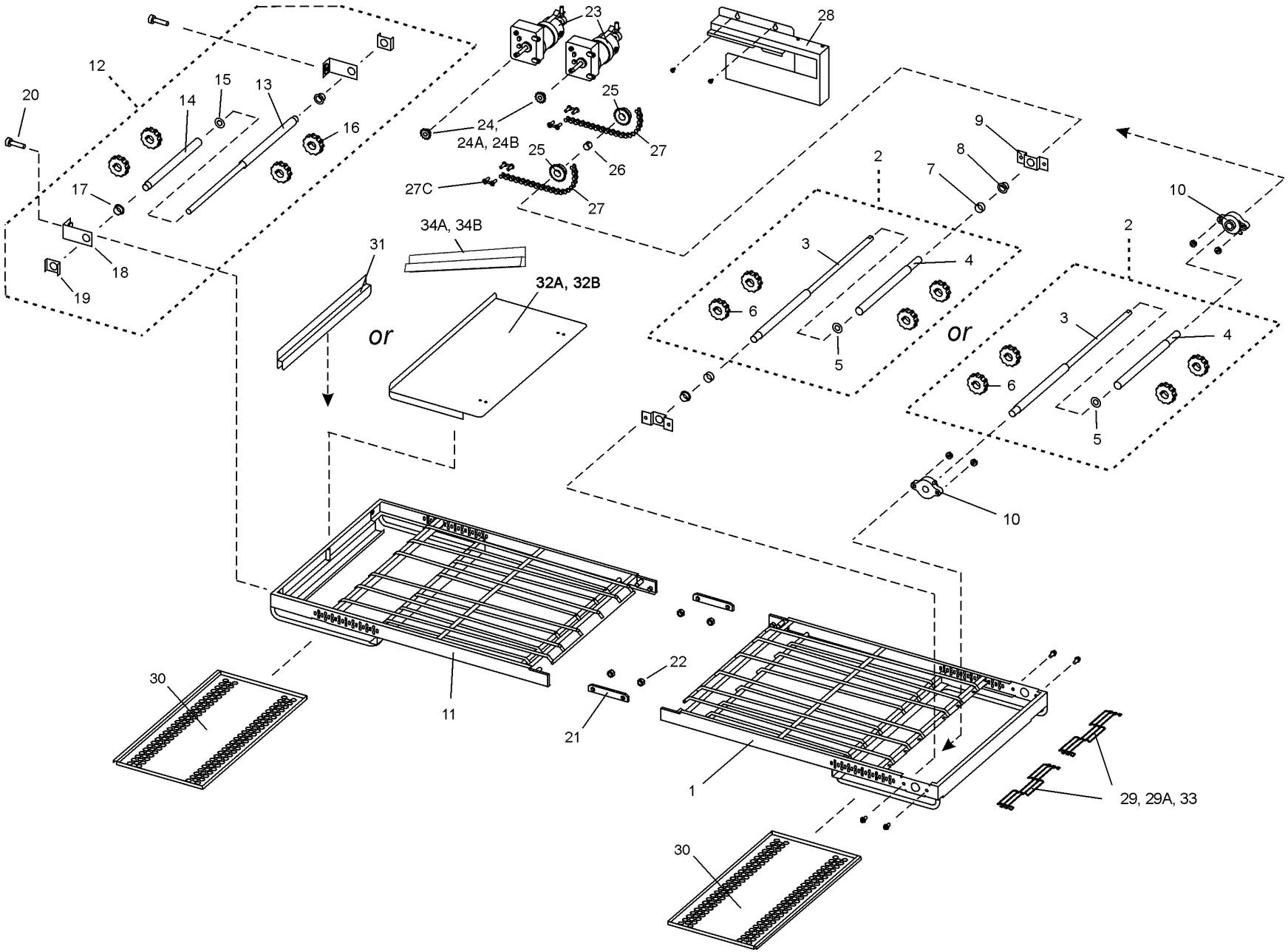

Parts for Split Belt Conveyor - Standard Speed (3-30 Minutes), High Speed (1-10 minutes)

ITEM	QTY.	P/N - 60" CONVEYOR	P/N - 76" CONVEYOR	DESCRIPTION
1	1	48847	48790	FRAME, DRIVE SIDE
2	1	< - - - - 48759	- - - - >	ASSEMBLY, SPLIT DRIVE SHAFT, STANDARD AND HIGH SPEED (INC. ITEMS 3-6)
3	1	< - - - - 49969	- - - - >	SPLIT DRIVE SHAFT - MAIN
4	1	< - - - - 48837	- - - - >	SPLIT DRIVE SHAFT - SLEEVE
5	1	< - - - - 21415-0001	- - - - >	FLAT WASHER, BRONZE
6	4	< - - - - 22229-0003	- - - - >	SPROCKET, CONV. BELT
7	2	< - - - - 43275	- - - - >	SPACER (STANDARD SPEED ONLY)
8	2	< - - - - 22034-0003	- - - - >	BUSHING, BRONZE 5/8" I.D. (STANDARD ONLY)
9	2	< - - - - 49972	- - - - >	BRACKET, DRIVE SUPPORT (STANDARD ONLY)
10	2	< - - - - 45377	- - - - >	FLANGE BEARING (HIGH SPEED ONLY)
11	1	48746	48795	FRAME, IDLER SIDE
12	1	< - - - - 48769	- - - - >	ASSEMBLY, SPLIT IDLER SHAFT (INC. ITEMS 13-19)
13	1	< - - - - 49968	- - - - >	SPLIT IDLER SHAFT - MAIN
14	1	< - - - - 48778	- - - - >	SPLIT IDLER SHAFT - SLEEVE
15	1	< - - - - 21415-0001	- - - - >	FLAT WASHER, BRONZE
16	4	< - - - - 22229-0003	- - - - >	SPROCKET, CONV. BELT
17	2	< - - - - 22034-0003	- - - - >	BUSHING, BRONZE 5/8" I.D.
18	2	< - - - - 37000-0413	- - - - >	BRACKET, IDLER ADJUSTMT.
19	2	< - - - - 54947	- - - - >	BRACKET, IDLER SUPPORT
20	2	< - - - - 35000-1008	- - - - >	SCREW, IDLER ADJUSTMENT
21	2	< - - - - 50792	- - - - >	PIVOT PLATE
22	4	< - - - - 21176-0002	- - - - >	LOCKNUT, HEX 3/8"-16 SS
23		SEE PAGES 14 & 15		ASSEMBLY, CONVEYOR MOTOR AND PICKUP (INC. ITEM 23a)

ITEM	QTY.	P/N - 60" CONVEYOR	P/N - 76" CONVEYOR	DESCRIPTION
23A	1	SEE PAGES 14 & 15		PICKUP
24	2	< - - - - 34128	- - - - >	SPROCKET, CONVEYOR DRIVE MOTOR, 20T (STANDARD SPEED) .317 BORE
24A	2	< - - - - 38215	- - - - >	SPROCKET, 22T (HIGH SPEED) .314 BORE
24B	2	< - - - - 34129	- - - - >	SPROCKET, 12T (.314 BORE (EARLY MODELS)
25	2	< - - - - 22159-0003	- - - - >	SPROCKET, CONVEYOR DRIVE SHAFT, 20T (STANDARD AND HIGH SPEED)
26	1	< - - - - 35900-0023	- - - - >	BUSHING, DRIVE SPROCKET
27A	1	50050	50053	ASSEMBLY, DRIVE CHAIN, REAR BELT (LONG - INC. ITEM 27c) 20"
27B	1	50051	50052	ASSEMBLY, DRIVE CHAIN, FRONT BELT (SHORT - INC. ITEM 27C) 12"
27C	2	< - - - - 3101212	- - - - >	MASTER LINK, DRIVE CHAIN
28	1	48851	50029	ASSEMBLY, CHAIN COVER
29	2	50056	50058	BELT, CONVEYOR, 9"/229mm, STANDARD
29A	A/R	< - - - - 37022	- - - - >	12" SECTION OF BELT
30	2	48707	48708	CRUMB PAN, W/HOLES, ENTRANCE & EXIT
31	1	50044	50044	END STOP
32A	1	50040	50040	EXIT TRAY, 8"/203mm
32B	1	50023	50023	EXIT TRAY, 20"/508mm
33	1	< - - - - 37020	- - - - >	KIT, MASTER LINK
34A	1	30830	30830	SIDE STOP, LEFT
34B	1	30796	30796	SIDE STOP, RIGHT (NOT SHOWN)

PS536

Standard Air finger configuration
NOTE: Left-to-Right configuration is shown.
For Right-to-Left conveyors, “mirror” the placement of the fingers.

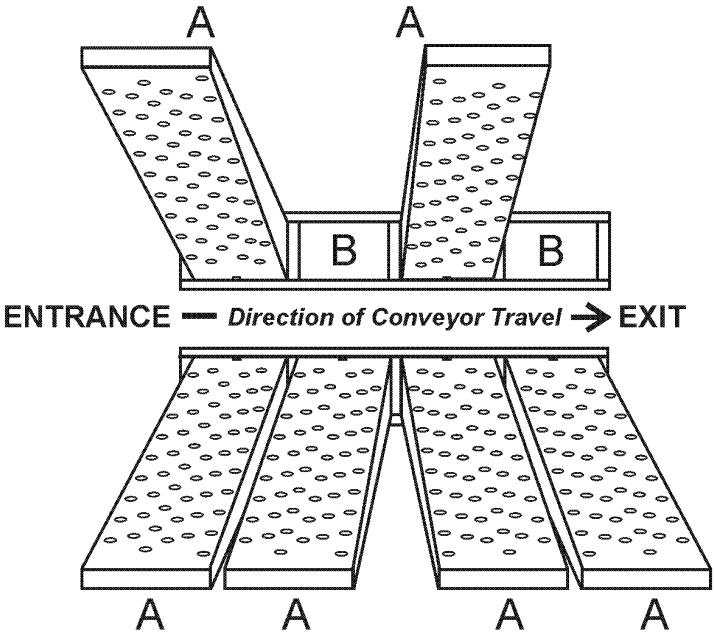

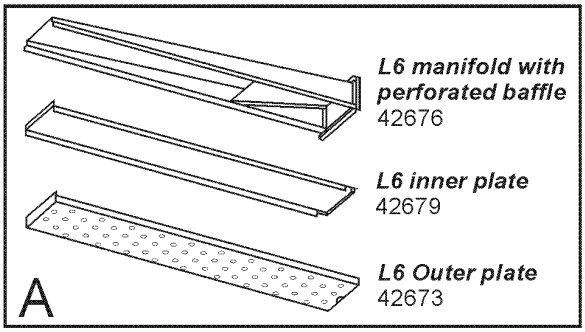

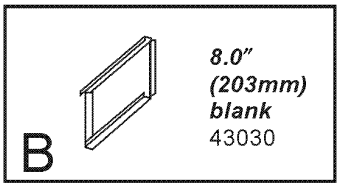

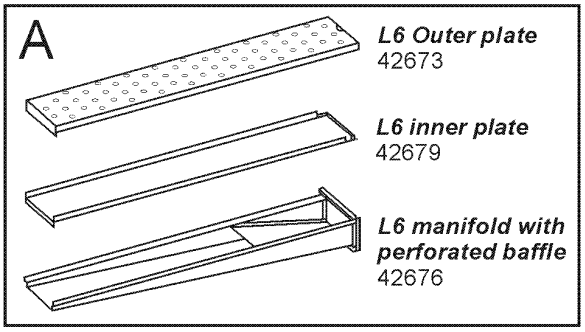

Finger Arrangement P/N 45476 Rev. B, 3/8/01

Wiring Diagrams (electrical schematics)

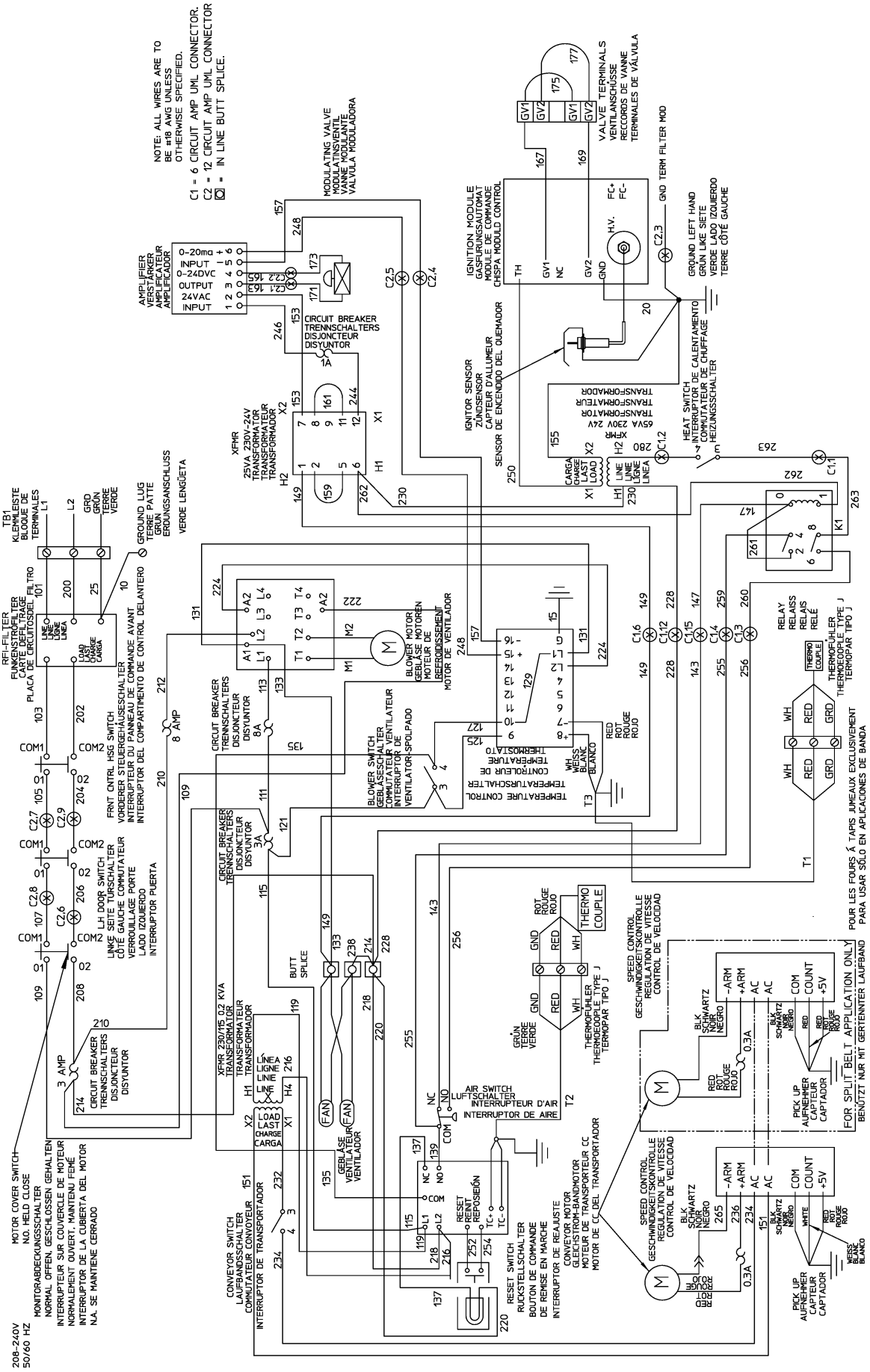

55553B

208;240 volt 50/60 Hz, 1 Phase ENG/GM/FR/SP

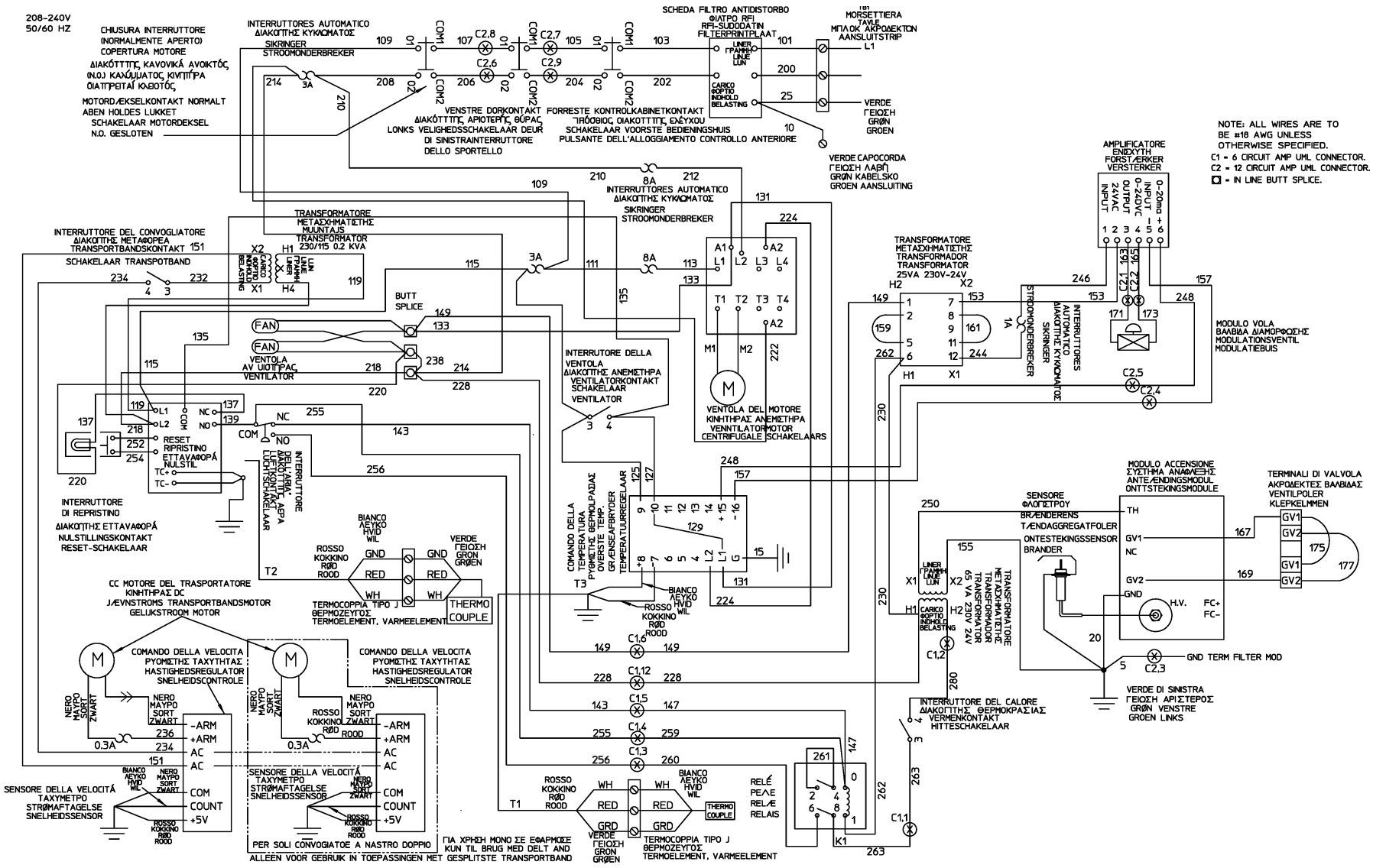

208;240 volt 50/60 Hz, 1 Phase IT/GR/DN/DU

55551B

NOTES