MITSUBISHI ELECTRIC

SPLIT-TYPE AIR CONDITIONERS

Changes for the Better

Revision : A
● MU-A12WA-1 has been added.

Please void OB449.

OUTDOOR UNIT

SERVICE MANUAL

HFC utilized
R410A

No. OB449
REVISED EDITION-A

Wireless type
Models

MU-A09WA
MU-A12WA
MU-A12WA-1

Indoor unit service manual
MS-A•WA Series (OB448)

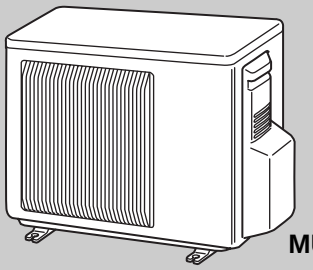

MU-A09WA

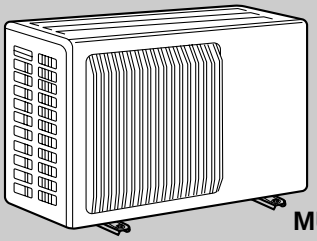

MU-A12WA

CONTENTS

1. TECHNICAL CHANGES ····· 2
2. PART NAMES AND FUNCTIONS ····· 5
3. SPECIFICATION ····· 6
4. OUTLINES AND DIMENSIONS ····· 8
5. WIRING DIAGRAM ····· 9
6. REFRIGERANT SYSTEM DIAGRAM ····· 10
7. DATA ····· 12
8. TROUBLESHOOTING ····· 16
9. DISASSEMBLY INSTRUCTIONS ····· 17
10. PARTS LIST ····· 22
    10-1. PARTS LIST ····· 22
    10-2. RoHS PARTS LIST ····· 24

NOTE:
This service manual describes technical data of the outdoor units.
RoHS compliant products have <G> mark on the spec name plate.
For servicing of RoHS compliant products, refer to the RoHS PARTS LIST (RoHS compliant).

Mr.SLIM™

Revision : A
• MU-A12WA-1 has been added.

1 TECHNICAL CHANGES

MU09TW → MU-A09WA
MU12TN → MU-A12WA

1.Outdoor unit model has been changed.
2.Refrigerant has been changed. (R22 → R410A)
3.Compressor has been changed.

MUA12WA → MU-A12WA-1

1.WIRING DIAGRAM has been changed.

INFORMATION FOR THE AIR CONDITIONER WITH R410A REFRIGERANT

- This room air conditioner adopts HFC refrigerant (R410A) which never destroys the ozone layer.
- Pay particular attention to the following points, though the basic installation procedure is same as that for R22 air conditioners.

① As R410A has working pressure approximate 1.6 times as high as that of R22, some special tools and piping parts/materials are required. Refer to the table below.
② Take sufficient care not to allow water and other contaminations to enter the R410A refrigerant during storage and installation, since it is more susceptible to contaminations than R22.
③ For refrigerant piping, use clean, pressure-proof parts/materials specifically designed for R410A. (Refer to 2. Refrigerant piping.)
④ Composition change may occur in R410A since it is a mixed refrigerant. When charging, charge liquid refrigerant to prevent composition change.

		New refrigerant	Previous refrigerant
Refrigerant	Refrigerant	R410A	R22
	Composition (Ratio)	HFC-32: HFC-125 (50%:50%)	R22 (100%)
	Refrigerant handling	Pseudo-azeotropic refrigerant	Single refrigerant
	Chlorine	Not included	Included
	Safety group (ASHRAE)	A1/A1	A1
	Molecular weight	72.6	86.5
	Boiling point (°F)	-60.5	-41.4
	Steam pressure [77°F](PSIG)	225.82	136.34
	Saturated steam density [77°F](lb/ft^3)	3.995	2.772
	Combustibility	Non combustible	Non combustible
	ODP ※1	0	0.055
	GWP ※2	1730	1700
	Refrigerant charge method	From liquid phase in cylinder	Gas phase
	Additional charge on leakage	Possible	Possible
Refrigeration oil	Kind	Incompatible oil	Compatible oil
	Color	Non	Light yellow
	Smell	Non	Non

※1 :Ozone Destruction Parameter : based on CFC-11
※2 :Global Warmth Parameter : based on CO_2

	New Specification	Current Specification
Compressor	The incompatible refrigeration oil easily separates from refrigerant and is in the upper layer inside the suction muffler. Raising position of the oil back hole enables to back the refrigeration oil of the upper layer to flow back to the compressor. 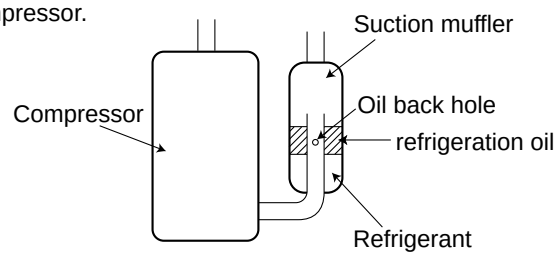	Since refrigerant and refrigeration oil are compatible each, refrigeration oil goes back to the compressor through the lower position oil back hole. 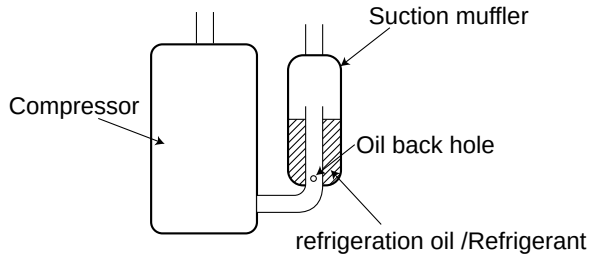

Conversion chart of refrigerant temperature and pressure

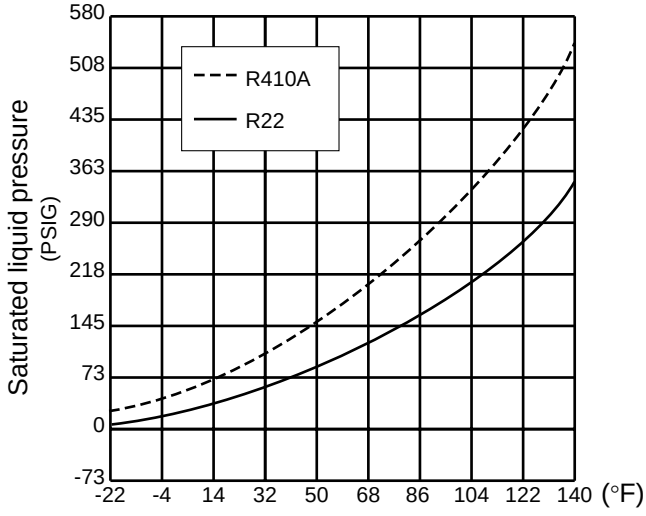

1.Tools dedicated for the air conditioner with R410A refrigerant

The following tools are required for R410A refrigerant. Some R22 tools can be substituted for R410A tools.

R410A tools	Can R22 tools be used?	Description
Gauge manifold	No	R410A has high pressures beyond the measurement range of existing gauges.
Charge hose	No	Hose material have been changed to improve the pressure resistance.
Gas leak detector	No	Dedicated for HFC refrigerant.
Torque wrench	Yes	1/4in. and 3/8in.
	No	1/2in. and 5/8in.
Flare tool	Yes	Clamp bar hole has been enlarged to reinforce the spring strength in the tool.
Flare gauge	New	Provided for flaring work (to be used with R22 flare tool).
Vacuum pump adapter	New	Provided to prevent the back flow of oil. This adapter enables you to use vacuum pumps.
Electronic scale for refrigerant charging	New	It is difficult to measure R410A with a charging cylinder because the refrigerant bubbles due to high pressure and high-speed vaporization

No : Not Substitutable for R410A Yes : Substitutable for R410A

2.Refrigerant piping

① Specifications

Use the copper or copper-alloy seamless pipes for refrigerant that meet the following specifications.

Outside diameter(in)	Wall thickness (in)	Insulation material
1/4	0.0315	Heat resisting foam plastic Specific gravity 0.045 Thickness 0.315 in
3/8	0.0315	
1/2	0.0315	
5/8	0.0394	

② Flaring work and flare nut

Flaring work for R410A pipe differs from that for R22 pipe.

For details of flaring work, refer to Installation manual “FLARING WORK”.

Pipe diameter	Dimension of flare nut mm(in.)	
inch	R410A	R22
1/4	17 (11/16)	17 (11/16)
3/8	22 (7/8)	22 (7/8)
1/2	26 (1-1/32)	24 (15/16)
5/8	29 (1-5/32)	27 (1-1/16)

3.Refrigerant oil

Apply the special refrigeration oil (accessories: packed with indoor unit) to the flare and the union seat surfaces.

4.Air purge

- Do not discharge the refrigerant into the atmosphere.
  Take care not to discharge refrigerant into the atmosphere during installation, reinstallation, or repairs to the refrigerant circuit.
- Use the vacuum pump for air purging for the purpose of environmental protection.

5.Additional charge

For additional charging, charge the refrigerant from liquid phase of the gas cylinder.
If the refrigerant is charged from the gas phase, composition change may occur in the refrigerant inside the cylinder and the outdoor unit. In this case, ability of the refrigeration cycle decreases or normal operation can be impossible. However, charging the liquid refrigerant all at once may cause the compressor to be locked. Thus, charge the refrigerant slowly.

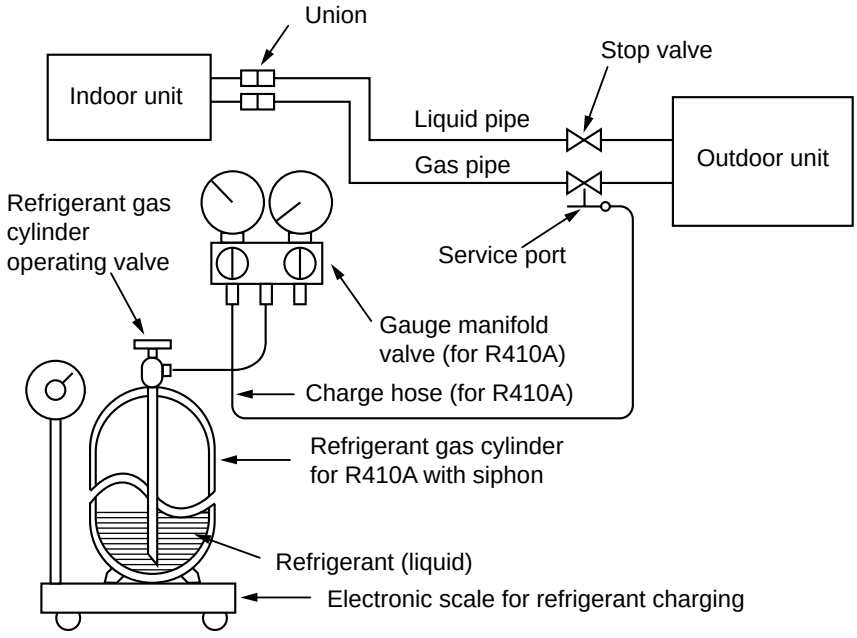

2 PART NAMES AND FUNCTIONS

MU-A09WA

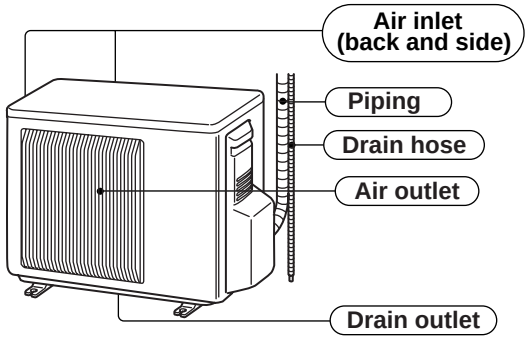

MU-A12WA

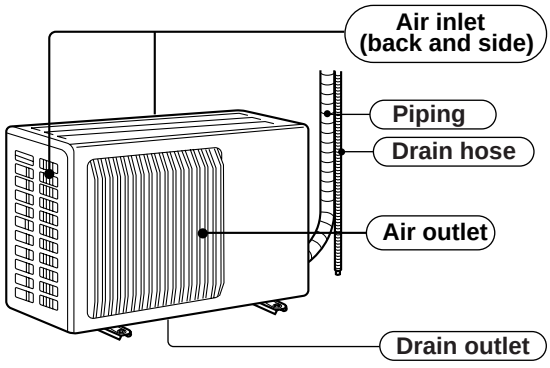

3 SPECIFICATION

Item		Model	MS-A09WA	MS-A12WA
Capacity Rated(Minimum~Maximum)	Cooling ※1	Btu/h	9,500	12,000
Power consumption Rated(Minimum~Maximum)	Cooling ※1	W	870	1,070
EER ※1 [SEER] ※2	Cooling		10.9 [13.0]	11.2 [13.0]
OUTDOOR UNIT MODEL			**MU-A09WA**	**MU-A12WA**
External finish			Munsell 3Y 7.8/1.1	
Power supply		V, phase, Hz	115, 1, 60	
Max. fuse size (time delay)		A	15	20
Min. circuit ampacity		A	14	16
Fan motor		F.L.A	0.63	0.926
Compressor	Model		RN092WHDHT	RN110WHDHT
	Winding resistance (at 68˚F) Ω		C-R 0.81 C-S 1.49	C-R 0.66 C-S 1.23
		R.L.A	9.30	10.82
		L.R.A	47	56
Refrigerant control			Capillary tube	
Sound level		dB(A)	47	52
Dimensions	W	in.	31-1/2	33-7/16
	D	in.	11-1/4	11-7/16
	H	in.	21-5/8	23-13/16
Weight		lb.	78	96
REMOTE CONTROLLER			Wireless type	
REFRIGERANT PIPING			Not supplied	
Refrigerant pipe size (Min. wall thickness)	Liquid	in.	1/4 (0.0315)	
	Gas	in.	3/8 (0.0315)	1/2 (0.0315)
Connection method	Indoor		Flared	
	Outdoor		Flared	
Between the indoor & outdoor units	Height difference	ft.	35	
	Piping length	ft.	65	
Refrigerant charge (R410A)			2lb.5oz.	3lb. 1oz.
Refrigerating oil (Model)		cc	350 (NE022)	

NOTE : Test conditions are based on ARI 210/240.
※1 : Rating conditions(cooling) — Indoor : 80˚FDB, 67˚FWB, Outdoor : 95˚FDB, (75˚FWB)

※2

(Unit : [˚F])

	Mode	Test	Indoor air condition		Outdoor air condition	
			Dry bulb	Wet bulb	Dry bulb	Wet bulb
ARI	SEER (Cooling)	"A" Cooling Steady State at rated compressor Speed	80	67	95	(75)
		"B-2" Cooling Steady State at rated compressor Speed	80	67	82	(65)
		"B-1" Cooling Steady State at minimum compressor Speed	80	67	82	(65)
		Low ambient Cooling Steady State at minimum compressor Speed	80	67	67	(53.5)
		Intermediate Cooling Steady State At Intermediate compressor Speed	80	67	87	(69)

Operating Range

		Indoor intake air temperature	Outdoor intake air temperature
Cooling	Maximum	95˚FDB, 71˚FWB	115˚FDB
	Minimum	67˚FDB, 57˚FWB	67˚FDB

4 OUTLINES AND DIMENSIONS

MU-A09WA

Unit : inch

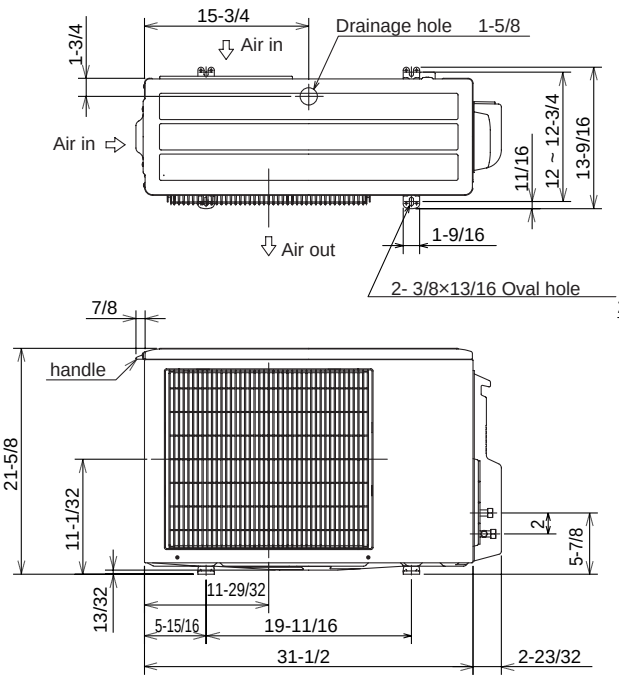

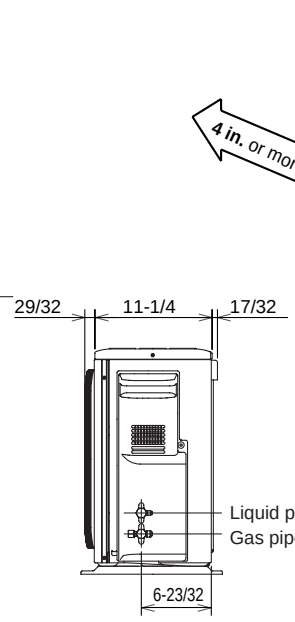

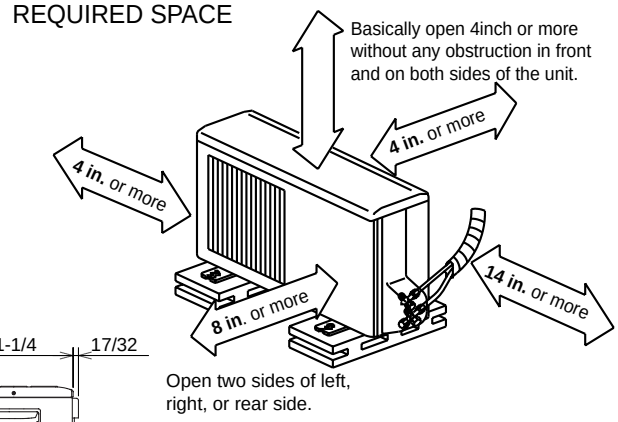

MU-A12WA

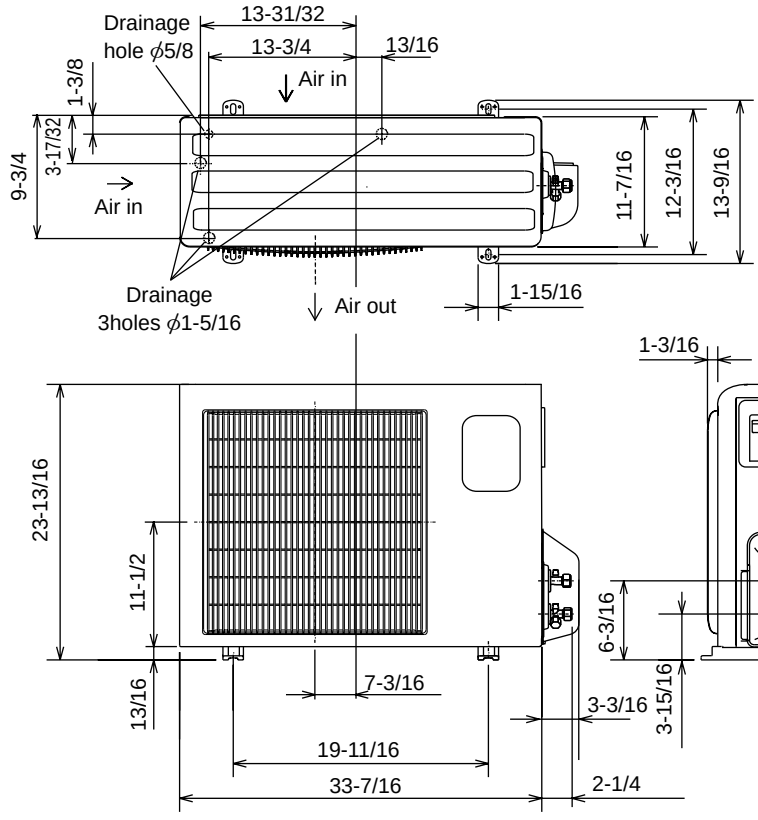

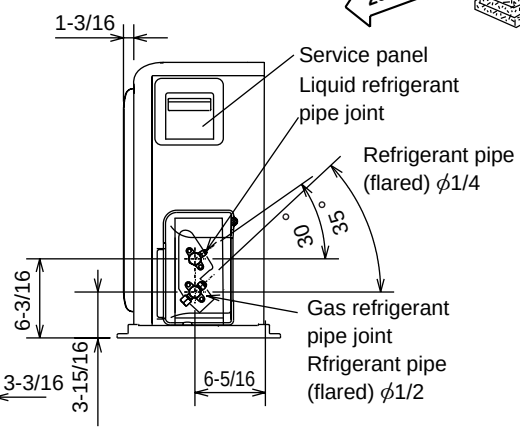

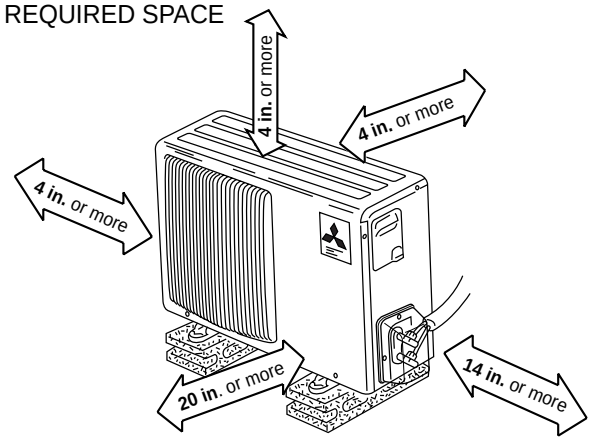

5 WIRING DIAGRAM

MU-A09WA

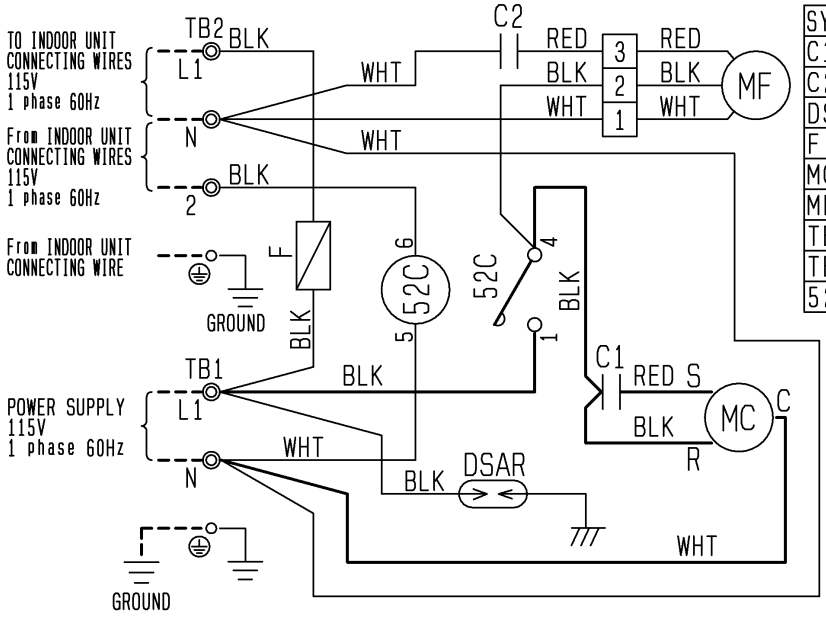

SYMBOL	NAME
C1	COMPRESSOR CAPACITOR
C2	FAN MOTOR CAPACITOR
DSAR	SURGE ABSORBER
F	FUSE
MC	COMPRESSOR(INNER PROTECTOR)
MF	FAN MOTOR(INNER PROTECTOR)
TB1	TERMINAL BLOCK
TB2	TERMINAL BLOCK
52C	COMPRESSOR CONTACTOR

NOTES
1. About the indoor side electric wiring refer to the indoor unit electric wiring diagram for servicing.
2. Use copper conductors only(for field wiring).
3. Symbols below indicate.
◎:Terminal block □□□:Connector

MU-A12WA

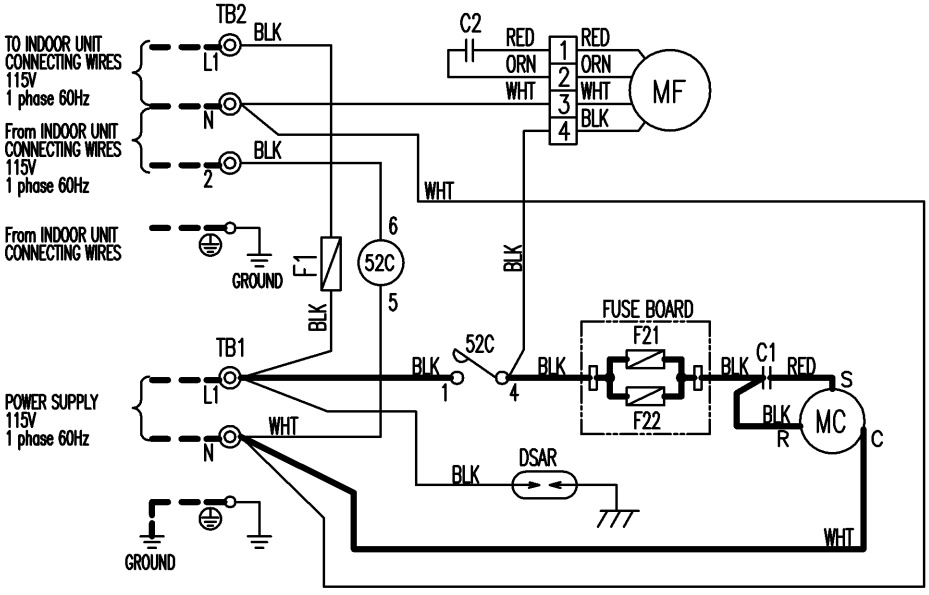

SYMBOL	NAME
C1	COMPRESSOR CAPACITOR
C2	FAN MOTOR CAPACITOR
DSAR	SURGE ABSORBER
F1	FUSE (AC250V, 3.15A)
F21, F22	FUSE (AC250V, 20A)
MC	COMPRESSOR (INNER PROTECTOR)
MF	FAN MOTOR (INNER PROTECTOR)
TB1	TERMINAL BLOCK
TB2	TERMINAL BLOCK
52C	COMPRESSOR CONTACTOR

NOTES: 1.About the indoor side electric wiring refer to the indoor unit electric wiring diagram for servicing.
2.Use copper conductors only (For field wiring).
3.Symbols below indicate.
◎:Terminal block □□□□:Connector

MU-A12WA-1

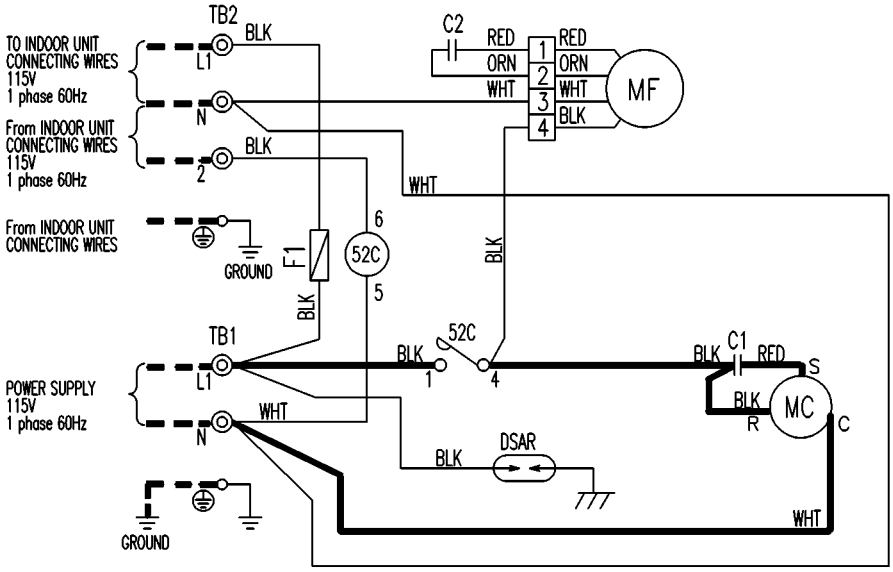

SYMBOL	NAME
C1	COMPRESSOR CAPACITOR
C2	FAN MOTOR CAPACITOR
DSAR	SURGE ABSORBER
F1	FUSE (AC250V, 3.15A)
MC	COMPRESSOR (INNER PROTECTOR)
MF	FAN MOTOR (INNER PROTECTOR)
TB1	TERMINAL BLOCK
TB2	TERMINAL BLOCK
52C	COMPRESSOR CONTACTOR

NOTES: 1.About the indoor side electric wiring refer to the indoor unit electric wiring diagram for servicing.
2.Use copper conductors only (For field wiring).
3.Symbols below indicate.
◎:Terminal block ▭▭▭ :Connector

6 REFRIGERANT SYSTEM DIAGRAM

MU-A09WA

Unit : inch (mm)

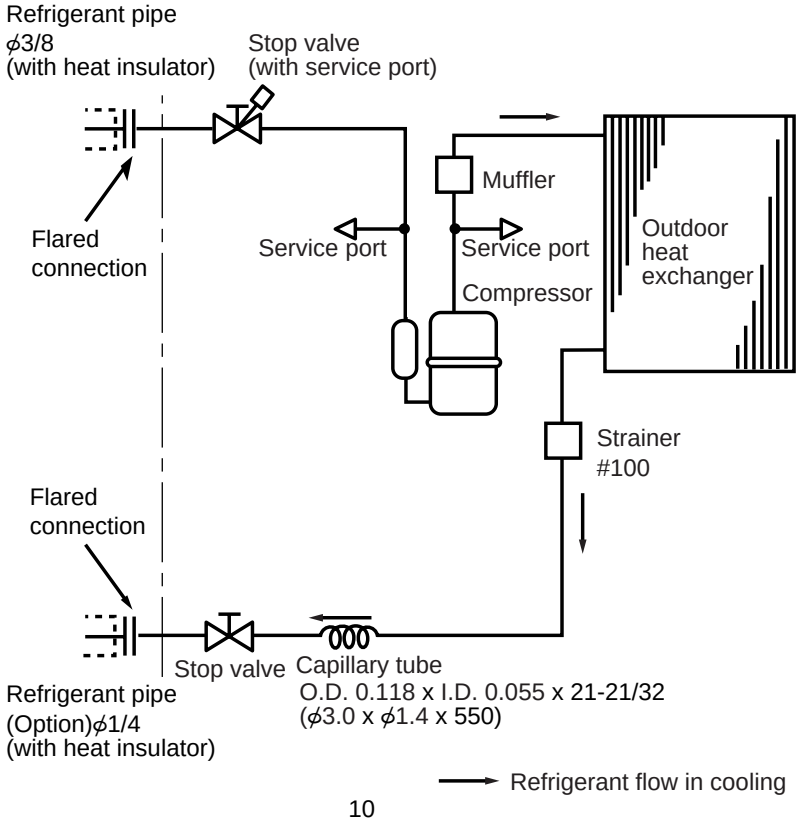

MU-A12WA

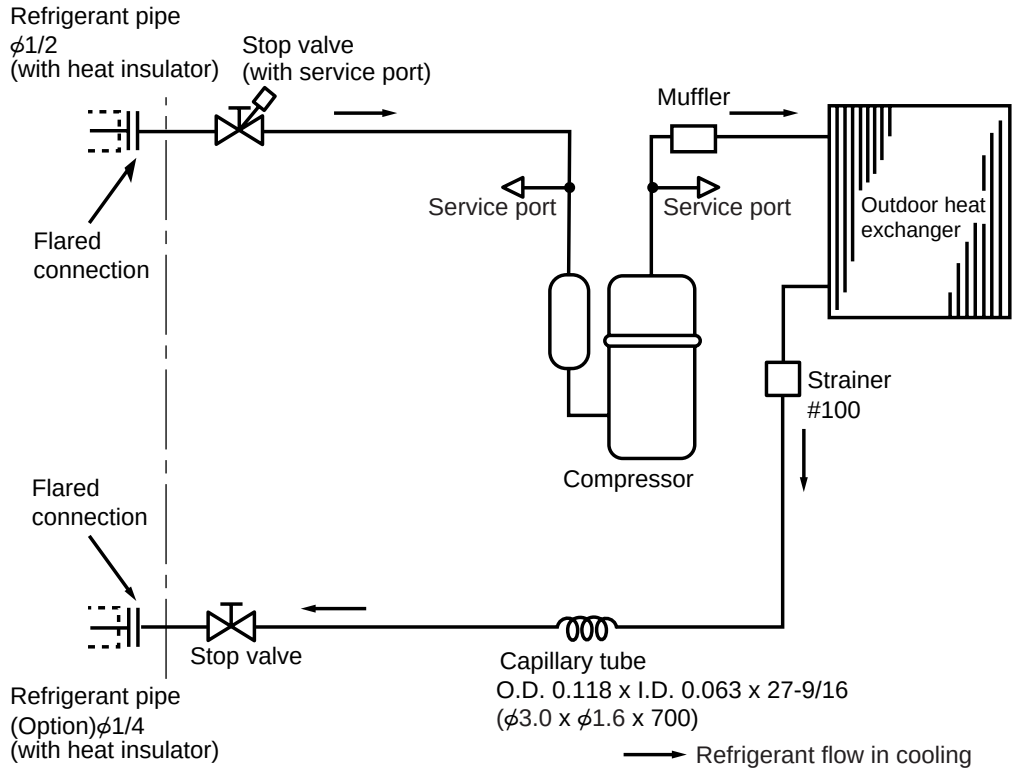

MAX. REFRIGERANT PIPING LENGTH & MAX. HEIGHT DIFFERENCE

Model	Refrigerant piping : ft		Piping size : in.			
			Gas		Liquid	
	Additional piping Max. length A	Additional piping Max. length B	Outside diameter	Minimum Wall thickness	Outside diameter	Minimum Wall thickness
MU-A09WA	65	35	ϕ 3/8	0.0315	ϕ 1/4	0.0315
MU-A12WA			ϕ 1/2			

MAX. HEIGHT DIFFERENCE

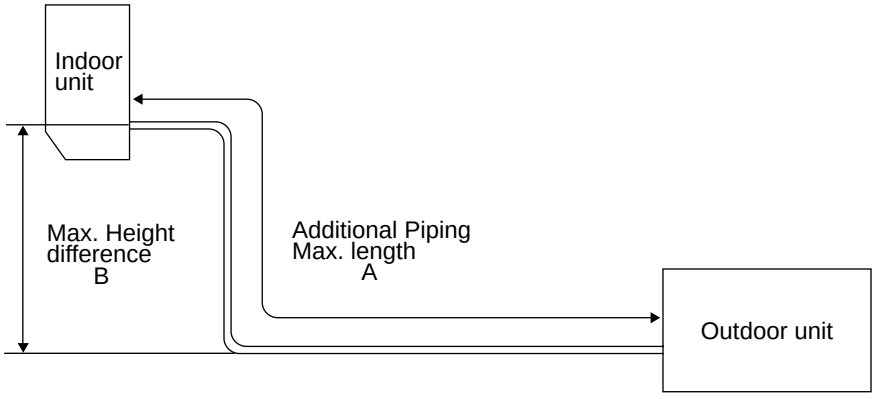

ADDITIONAL REFRIGERANT CHARGE(R410 : oz.)

Model	**Outdoor unit precharged**	**Refrigerant piping length (one way)**								
		25ft	**30ft**	**35ft**	**40ft**	**45ft**	**50ft**	**55ft**	**60ft**	**65ft**
MU-A09WA	**2lb. 5oz.**	**0**	**1.08**	**2.16**	**3.24**	**4.32**	**5.40**	**6.48**	**7.56**	**8.64**
MU-A12WA	**3lb. 1oz.**									

NOTE : Calculation : Xoz.=1.08/5oz./ft X (Refrigerant piping length (ft)-25)

7 DATA

MS-A09WA MS-A12WA

7-1. PERFORMANCE DATA

1) COOLING CAPACITY

Model	Indoor air IWB (˚F)	Outdoor intake air DB temperature (˚F)														
		75			85			95			105			115		
		TC	SHC	TPC	TC	SHC	TPC	TC	SHC	TPC	TC	SHC	TPC	TC	SHC	TPC
MS-A09WA	71	11.6	6.4	0.77	10.9	5.9	0.85	10.2	5.6	0.91	9.5	5.2	0.96	8.7	4.8	1.00
	67	11.0	7.5	0.73	10.3	7.0	0.80	9.5	6.5	0.87	8.8	6.0	0.92	8.1	5.5	0.97
	63	10.4	8.4	0.70	9.6	7.8	0.77	8.9	7.3	0.83	8.1	6.6	0.89	7.4	6.0	0.92
MS-A12WA	71	14.7	8.3	0.95	13.7	7.8	1.04	12.9	7.3	1.12	12.0	6.8	1.18	11.0	6.3	1.23
	67	13.9	9.7	0.90	13.0	9.1	0.99	12.0	8.4	1.07	11.2	7.8	1.13	10.3	7.2	1.19
	63	13.1	10.9	0.86	12.1	10.1	0.95	11.3	9.4	1.02	10.3	8.6	1.09	9.4	7.8	1.13

Notes 1. IWB : Intake air wet-bulb temperature.
TC : Total Capacity (x10^3 Btu/h), SHC : Sensible Heat Capacity (x10^3 Btu/h)
TPC : Total Power Consumption (kW)
2. SHC is based on 80˚F of indoor intake air DB temperature.

2) COOLING CAPACITY CORRECTIONS

Model	Refrigerant piping length (one way)		
	25ft (std)	40ft	65ft
MS-A09WA MS-A12WA	1.0	0.954	0.878

7-2. PERFORMANCE CURVE

NOTE : A point on the curve shows the reference point.

MS-A09WA

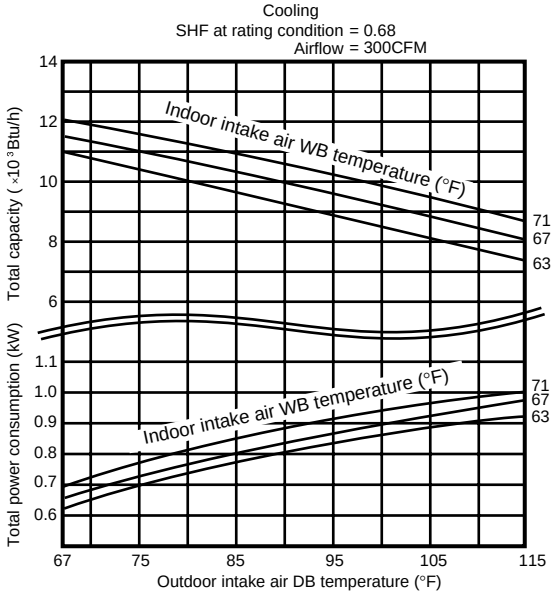

MS-A12WA

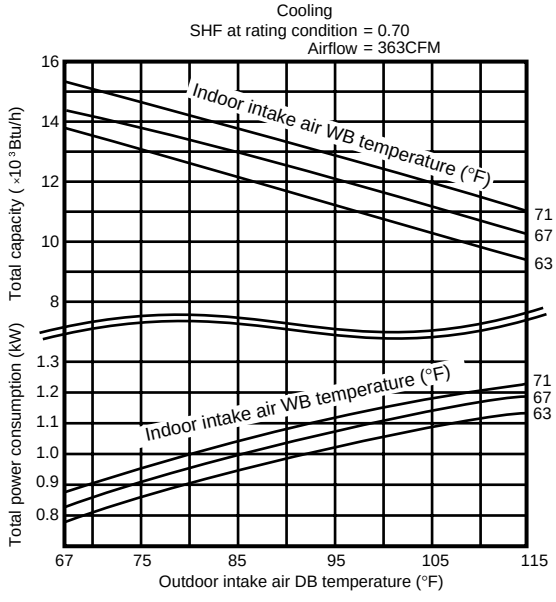

7-3. Condensing pressure

Data is based on the condition of indoor humidity 50%.
Air flow should be set at High.
A point on the curve shows the reference point.

MU-A09WA

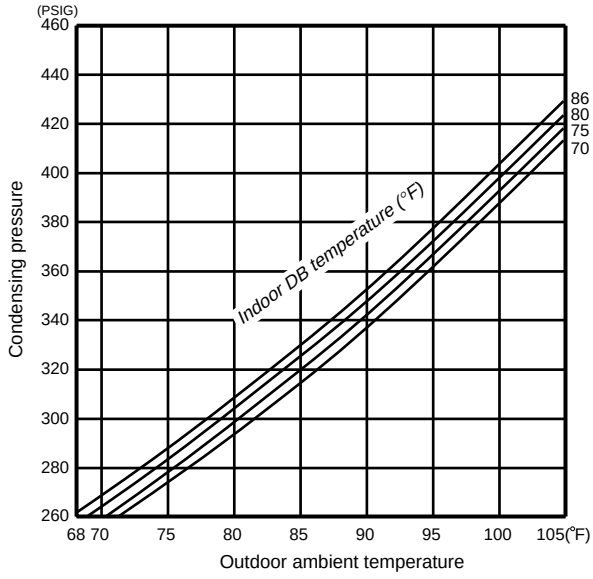

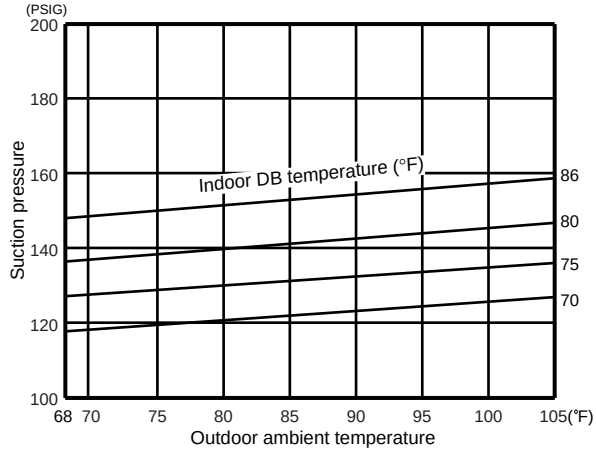

MU-A12WA

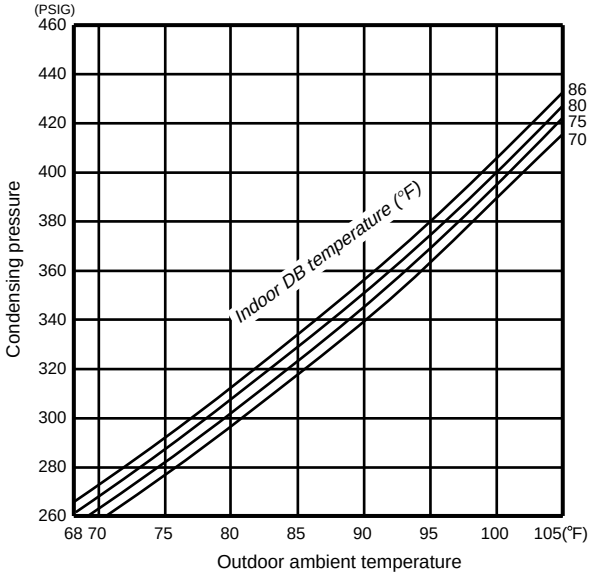

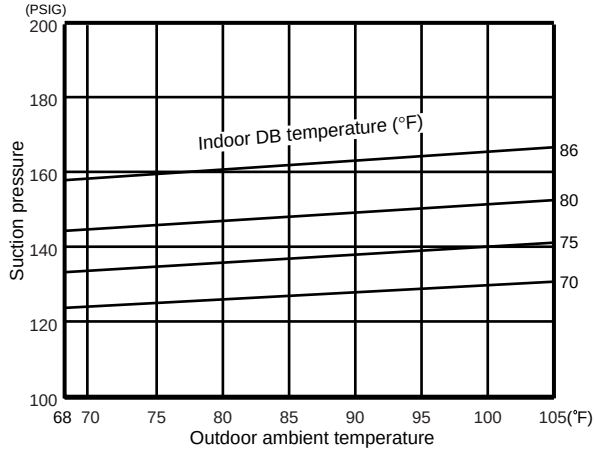

7-4. STANDARD OPERATION DATA

Model				MS-A09WA	MS-A12WA
Item			Unit	Cooling	Cooling
Total	Capacity		Btu / h	9500	12000
	SHF		—	0.68	0.70
	Input		kW	0.87	1.07
Electrical circuit	INDOOR UNIT MODEL			MS-A09WA	MS-A12WA
	Power supply (V, phase, Hz)			115, 1, 60	115, 1, 60
	Input		kW	0.019	0.035
	Fan motor current		A	0.27	0.51
	OUTDOOR UNIT MODEL			MU-A09WA	MU-A12WA
	Power supply (V, phase, Hz)			115, 1, 60	115, 1, 60
	Input		kW	0.851	1.035
	Comp. current		A	6.74	7.96
	Fan motor current		A	0.63	0.93
Refrigerant circuit	Condensing pressure		PSIG	372	375
	Suction pressure		PSIG	144	150
	Discharge temperature		˚F	154	149
	Condensing temperature		˚F	110	111
	Suction temperature		˚F	48	50
	Comp. shell bottom temp		˚F	146	139
	Ref. pipe length		ft.	25	25
	Refrigerant charge (R22)		—	2lb. 5oz.	3lb. 1oz.
Indoor unit	Intake air temperature	DB	˚F	80	80
		WB	˚F	67	67
	Discharge air temperature	DB	˚F	57	59
		WB	˚F	56	58
	Fan speed (High)		rpm	1160	1220
	Airflow (High)		CFM	300 (Wet)	363 (Wet)
Outdoor unit	Intake air temperature	DB	˚F	95	95
		WB	˚F	—	—
	Fan speed		rpm	830	830
	Airflow		CFM	1083	1327

7-5. OPERATING RANGE

(1) POWER SUPPLY

	Rating	Guaranteed Voltage
Outdoor unit	115V 60Hz 1ϕ	Min. 103V 115V Max. 127V

(2) OPERATION

Function	Intake air temperature / Condition	Indoor		Outdoor	
		DB (˚F)	WB (˚F)	DB (˚F)	WB (˚F)
Cooling	Standard temperature	80	67	95	—
	Maximum temperature	95	71	115	—
	Minimum temperature	67	57	67	—
	Maximum humidity	78%		—	

8 TROUBLESHOOTING

MU-A09WA MU-A12WA

8-1. Cautions on troubleshooting

1. Before troubleshooting, check the following:

1) Check the power supply voltage.
2) Check the indoor/outdoor connecting wire for mis-wiring.

2. Take care the following during servicing.

1).Before servicing the air conditioner, be sure to turn OFF the main unit first with the remote controller, and then after confirming the horizontal vane is closed, turn OFF the breaker and / or disconnect the power plug.

2) Be sure to turn OFF the power supply before removing the front panel, the cabinet, the top panel and the electronic control P.C. board.

3) When removing the electronic control P.C. board, hold the edge of the board with care NOT to apply stress on the components.

4) When connecting or disconnecting the connectors, hold the housing of the connector. DO NOT pull the lead wires.

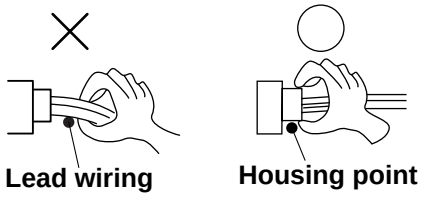

8-2. Instruction of trouble shooting

If indoor unit and outdoor unit doesn't operate, please check of outdoor unit fuse F.

8-3.Trouble criterion of main parts

MU-A09WA
MU-A12WA

<table>
<tr><th>Part name</th><th>Check method and criterion</th><th>Figure</th></tr>
<tr><td>Compressor (MC)

INNER PROTECTOR
MU-A09WA
302 ± 9°F OPEN
194 ±18°F CLOSE
MU-A12WA
338 ± 9°F OPEN
194 ±18°F CLOSE
MU-A12WA-1
311± 9°F OPEN
194 ±18°F CLOSE</td><td>Measure the resistance between the terminals with a tester.
(Coil wiring temperature 14°F ~ 104°F)
<table>
<tr><th rowspan="2">Color of the lead wire</th><th colspan="2">Normal</th></tr>
<tr><th>MU-A09WA</th><th>MU-A12WA</th></tr>
<tr><td>C-R</td><td>0.71~0.87Ω</td><td>0.58~0.71Ω</td></tr>
<tr><td>C-S</td><td>1.31~1.61Ω</td><td>1.09~1.33Ω</td></tr>
</table></td><td> 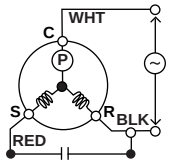
</td></tr>
<tr><td>Outdoor fan motor (MF)

INNER PROTECTOR
MU-A09WA
248 ± 9°F OPEN

INNER PROTECTOR
MU-A12WA
248 ± 9°F OPEN</td><td>Measure the resistance between the terminals with a tester.
(Coil wiring temperature 14°F ~ 104°F)
<table>
<tr><th rowspan="2">Color of the lead wire</th><th colspan="2">Normal</th></tr>
<tr><th>MU-A09WA</th><th>MU-A12WA</th></tr>
<tr><td>WHT-BLK</td><td>51~63Ω</td><td>27~33Ω</td></tr>
<tr><td>BLK-RED</td><td>62~76Ω</td><td>34~41Ω</td></tr>
</table></td><td> 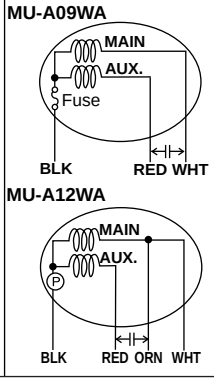
</td></tr>
</table>

Ⓟ:INNER PROTECTOR

9 DISASSEMBLY INSTRUCTIONS

<"Terminal with locking mechanism" Detaching points>

The terminal which has the locking mechanism can be detached as shown below.
There are two types (Refer to (1) and (2)) of the terminal with locking mechanism.
The terminal without locking mechanism can be detached by pulling it out.
Check the shape of the terminal before detaching.

(1) Slide the sleeve and check if there is a locking lever or not.

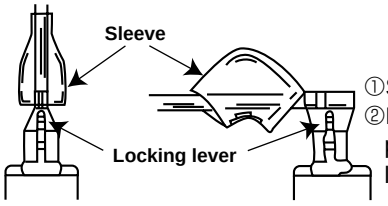

①Slide the sleeve.
②Pull the terminal while pushing the locking lever.

(2) The terminal with this connector has the locking mechanism.

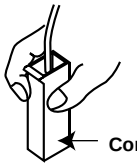

①Hold the sleeve, and pull out the terminal slowly.

9-1. MU-A09WA

OPERATING PROCEDURE	PHOTOS
1. Removing the cabinet. (1) Remove the screw fixing the service panel. (2) Pull down the service panel and remove it. (3) Remove the conduit cover. (4) Disconnect the power supply wire and indoor/outdoor connecting wire. (5) Remove the screws fixing the top panel. (6) Remove the top panel. (7) Remove the screws fixing the cabinet. (8) Remove the cabinet. (9) Remove the screws fixing the back panel. (10) Remove the back panel. **Photo 2** 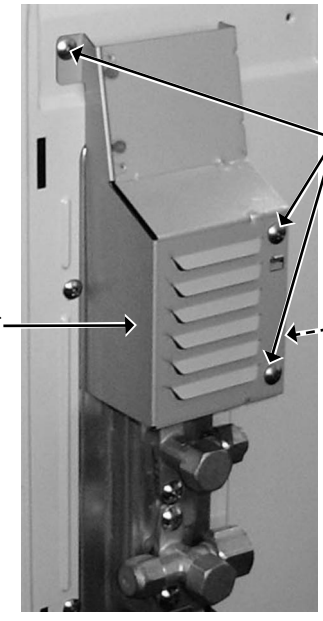 	**Photo 1** 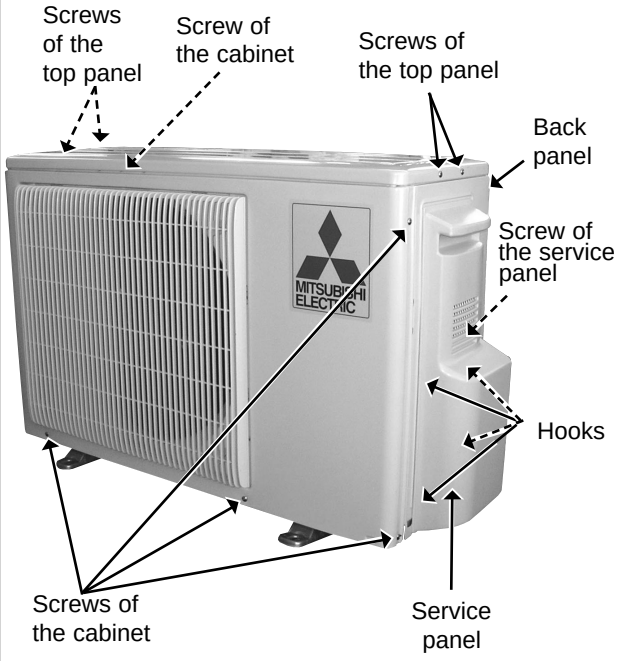

OPERATING PROCEDURE	PHOTOS
2. Removing the electrical parts (1) Remove the service panel and the cabinet.(Refer to 1.) (2) Remove the following parts. •Compressor capacitor (C1) •Outdoor fan capacitor (C2) •Terminal block (TB1,TB2) •Surge absorber (DSAR) •Compressor contactor (52C)	**Photo 3** 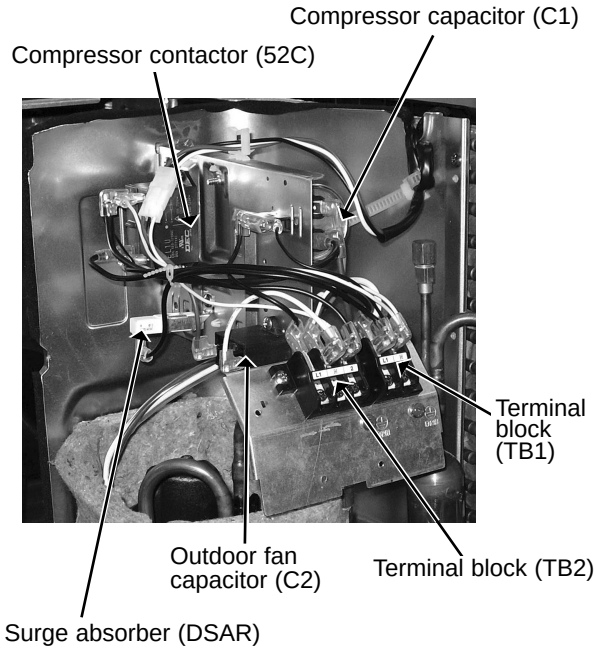
3. Removing the propeller and the outdoor fan motor (1) Remove the cabinet. (Refer to 1.) (2) Remove the propeller nut and the propeller. **NOTE :** Loose the propeller in the rotating direction for removal. When attaching the propeller, align the mark on the propeller and the motor shaft cut section. Set the propeller in position by using the cut on the shaft and the mark on the propeller. (3) Remove the lead clamps and outdoor fan motor lead wires. (4) Remove the screws fixing the outdoor fan motor. (5) Remove the outdoor fan motor.	**Photo 4** 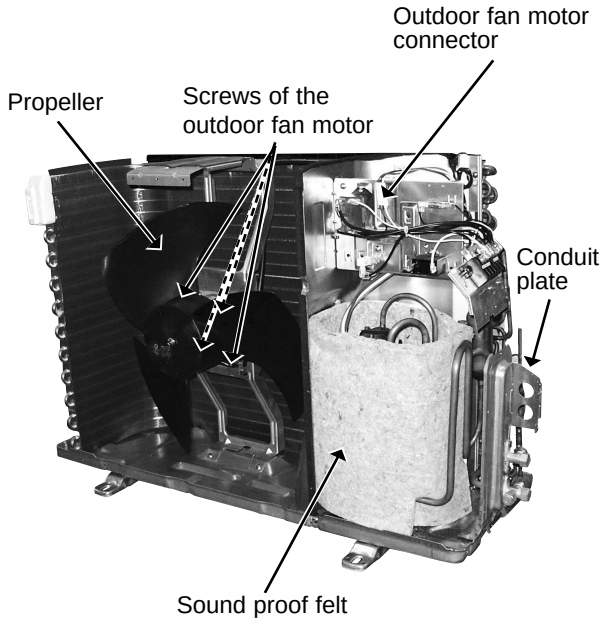

OPERATING PROCEDURE	PHOTOS
4. Removing the compressor (1) Remove the cabinet. (Refer to 1.) (2) Remove the relay panel. (3) Remove the soundproof felt. (4) Remove the terminal cover on compressor. (5) Disconnect lead wires from the glass terminal of the compressor. (6) Recover gas from the refrigerant circuit. **NOTE** ● Recover gas from the pipes until the pressure gauge shows 0 PSIG. (7) Disconnect the welded part of the suction pipe and discharge pipe. (8) Remove the nuts fixing the compressor. (9) Remove the compressor.	**Photo 5** 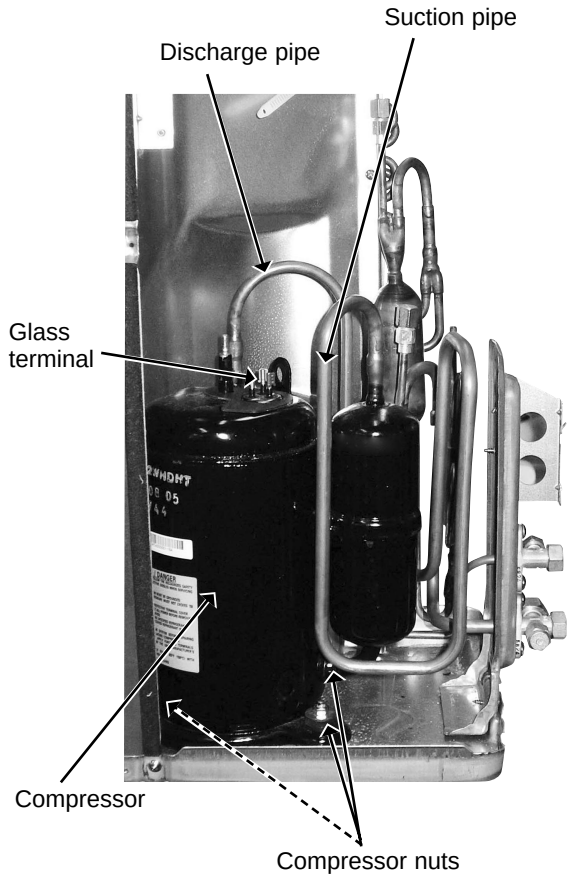

9-2. MU-A12WA

OPERATING PROCEDURE	PHOTOS
1. Removing the cabinet (1) Remove the screws of the cabinet. (2) Hold the bottom of the cabinet on the both side to remove the cabinet. (3) Remove the the cabinet.	**Photo 1** 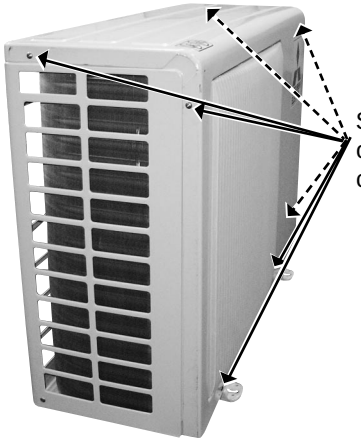 **Photo 2** 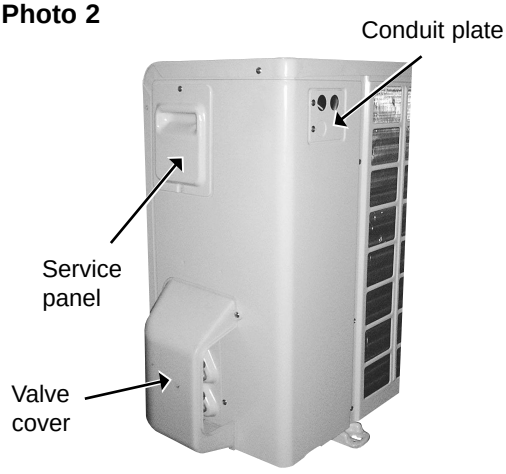
2. Removing the electrical parts (1) Remove the service panel and the cabinet. (Refer to 1.) (2) Remove the following parts. •Compressor capacitor (C1) •Outdoor fan capacitor (C2) •Terminal block (TB)	**Photo 3** 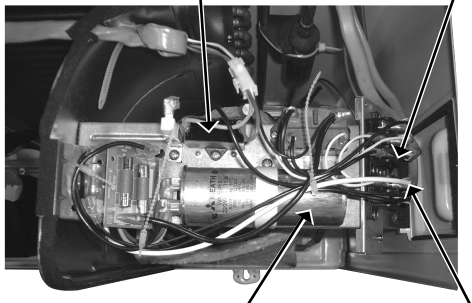

OPERATING PROCEDURE	PHOTOS
3. Removing propeller and the outdoor fan motor (1) Remove the cabinet. (Refer to 1) (2) Remove the propeller nut and remove the propeller. **NOTE :** Loose the propeller in the rotating direction for removal. When attaching the propeller, align the mark on the propeller and the motor shaft cut section. Set the propeller in position by using the cut on the shaft and the mark on the propeller. (3) Disconnect the connector and remove the lead clamps and outdoor fan motor lead wires. (4) Remove the screws fixing the outdoor fan motor. (5) Remove the outdoor fan motor.	**Photo 4** 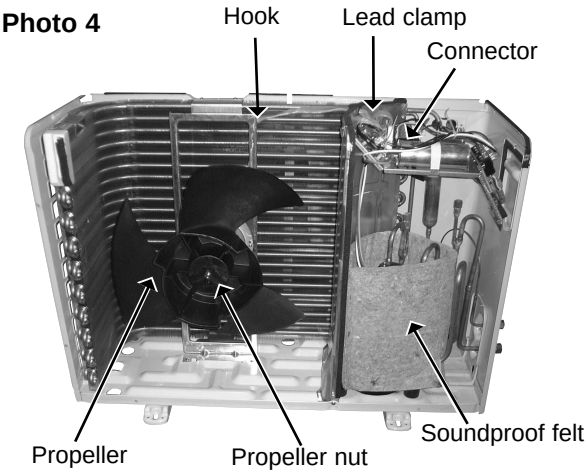
4. Removing the compressor (1) Remove the cabinet. (Refer to 1) (2) Remove the relay panel. (3) Remove the soundproof felt. (4) Remove the terminal cover. (5) Pull out the lead wires from the glass terminal of the compressor. (6) Recover gas from the refrigerant circuit. (7) Disconnect the welded part of the suction pipe and discharge pipe. (8) Remove the nuts fixing the compressor and the compressor. **NOTE** ● Before using a burner, reclaim gas from the pipes until the pressure gauge shows 0 PSIG. ● Use the burner under the condition that gas can be recovered even when the inner pressure rises by heat.	**Photo 5** 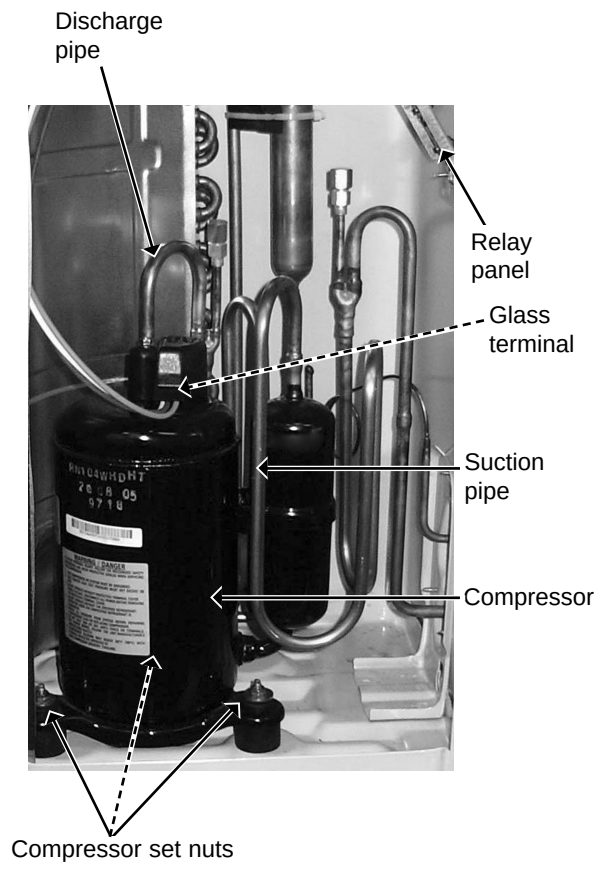

10 PARTS LIST

10-1. PARTS LIST (non-RoHS compliant)
MU-A09WA

1. OUTDOOR UNIT
STRUCTURAL PARTS, ELECTRICAL PARTS AND FUNCTIONAL PARTS

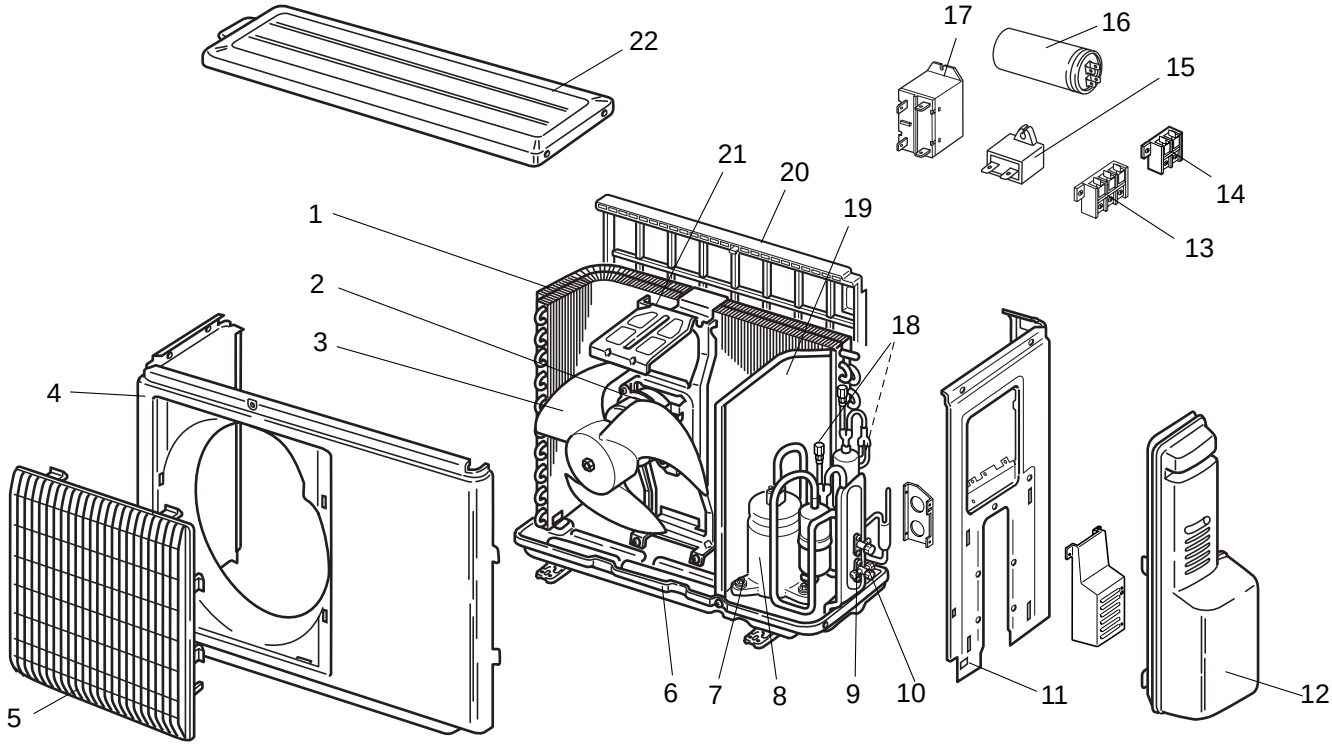

Part number that is circled is not shown in the illustration.

No.	Part No.	Part name	Symbol in Wiring Diagram	Q'ty/unit MU-A09WA	Remarks
1	E02 A49 630	OUTDOOR HEAT EXCHANGER		1	
2	E02 A49 301	OUTDOOR FAN MOTOR	MF	1	RA6W26-□□
3	E02 665 501	PROPELLER		1	
4	E02 903 232	CABINET		1	
5	E02 927 521	GRILLE(OUT)		1	
6	E02 905 290	BASE		1	
7	E02 075 506	COMPRESSOR RUBBER SET		3	3RUBBERS/SET
8	E02 A49 900	COMPRESSOR	MC	1	RN092WHDHT
9	E02 A49 661	STOP VALVE(GAS)		1	ϕ3/8
10	E02 A49 662	STOP VALVE(LIQUID)		1	ϕ1/4
11	E02 A54 233	BACK PANEL		1	
12	E02 A49 245	SERVICE PANEL		1	
13	E02 A50 374	TERMINAL BLOCK	TB1	1	3P
14	E02 A49 374	TERMINAL BLOCK	TB2	1	2P
15	E02 A49 350	OUTDOOR FAN CAPACITOR	C2	1	7.0μF/250VAC
16	E02 545 353	COMPRESSOR CAPACITOR	C1	1	70μF/220VAC
17	E02 A49 340	COMPRESSOR CONTACTOR	52C	1	
18	E02 A49 641	SERVICE PORT		2	1PCE/SET
19	E02 900 293	SEPARATOR		1	
20	E02 929 523	CONDENSER NET		1	
21	E02 900 515	MOTOR SUPPORT		1	
22	E02 927 297	TOP PANEL		1	
23	E02 441 936	CAPILLARY TUBE		1	O.D. 0.118 x I.D. 0.055x21-21/32
24	E02 282 383	SURGE ABSORBER	DSAR	1	

MU-A12WA
2. OUTDOOR UNIT
STRUCTURAL PARTS, ELECTRICAL PARTS AND FUNCTIONAL PARTS

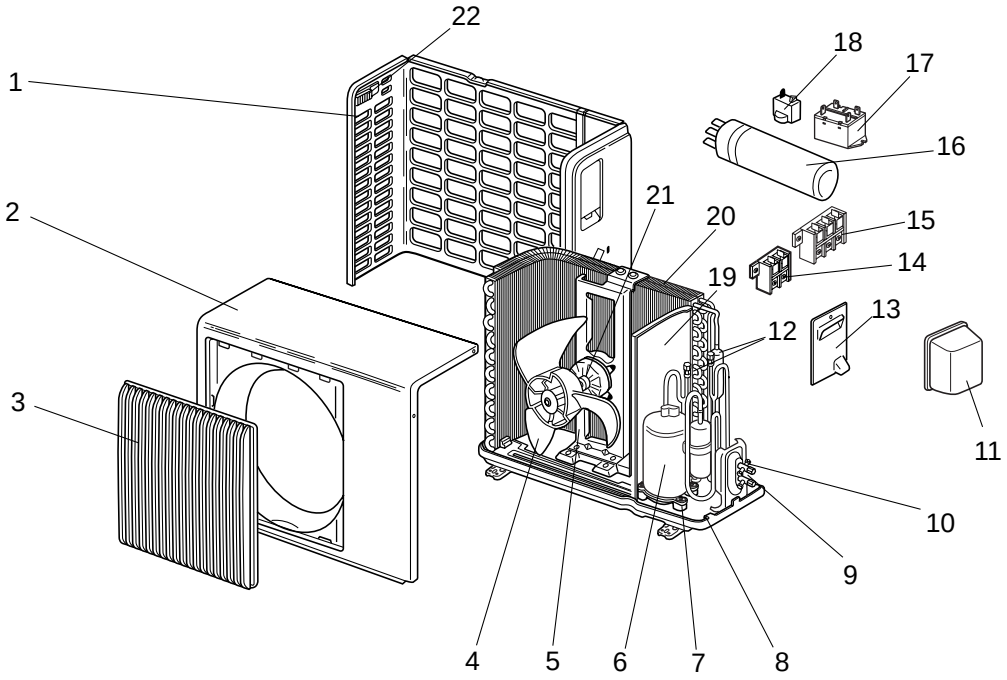

Part number that is circled is not shown in the illustration.

No.	Part No.	Part name	Symbol in Wiring Diagram	Q'ty/unit MU-A12WA	Remarks
1	E02 A50 233	BACK PANEL		1	
2	E02 817 232	CABINET		1	
3	E02 817 521	GRILLE		1	
4	E02 141 501	PROPELLER		1	
5	E02 139 515	MOTOR SUPPORT		1	
6	E02 A50 900	COMPRESSOR	MC	1	RN110WHDHT
7	E02 075 506	COMPRESSOR RUBBER SET		3	3RUBBERS/SET
8	E02 A27 290	BASE		1	
9	E02 A50 661	STOP VALVE(GAS)		1	ϕ1/2
10	E02 A50 662	STOP VALVE(LIQUID)		1	ϕ1/4
11	E02 819 650	VALVE COVER		1	
12	E02 A49 641	SERVICE PORT		2	1PCE / SET
13	E02 A50 245	SERVICE PANEL		1	
14	E02 A49 374	TERMINAL BLOCK	TB2	1	2P
15	E02 A50 374	TERMINAL BLOCK	TB1	1	3P
16	E02 A50 353	COMPRESSOR CAPACITOR	C1	1	75μF/220V AC
17	E02 A49 340	COMPRESSOR CONTACTOR	52C	1	
18	E02 A50 350	OUTDOOR FAN CAPACITOR	C2	1	9.5μF/250V AC
19	E02 A50 293	SEPARATOR		1	
20	E02 A50 630	OUTDOOR HEAT EXCHANGER		1	
21	E02 A50 301	OUTDOOR FAN MOTOR	MF	1	RA6W50-□□
22	E02 817 009	HANDLE		1	
23	E02 134 936	CAPILLARY TUBE		1	O.D. 0.118 X I.D. 0.063 X 27-9/16
24	E02 890 383	SURGE ABSORBER		1	

10-2. RoHS PARTS LIST (RoHS compliant)
MU-A09WA

1. OUTDOOR UNIT
STRUCTURAL PARTS, ELECTRICAL PARTS AND FUNCTIONAL PARTS

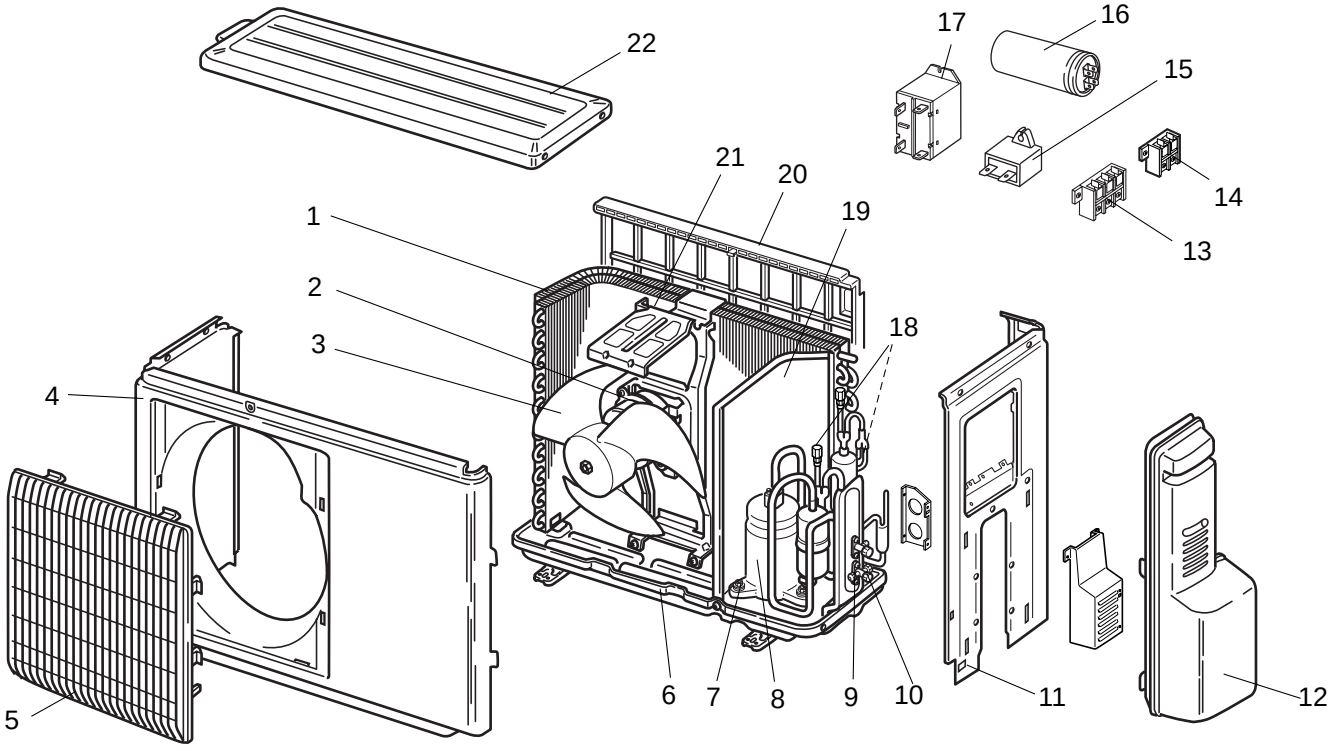

Part number that is circled is not shown in the illustration.

No.	RoHS	Part No.	Part name	Symbol in Wiring Diagram	Q'ty/unit MU-A09WA	Remarks
1	G	E12 A49 630	OUTDOOR HEAT EXCHANGER		1	
2	G	E12 A49 301	OUTDOOR FAN MOTOR	MF	1	RA6W26-□□
3	G	E12 665 501	PROPELLER		1	
4	G	E12 903 232	CABINET		1	
5	G	E12 927 521	GRILLE(OUT)		1	
6	G	E12 905 290	BASE		1	
7	G	E12 075 506	COMPRESSOR RUBBER SET		3	3RUBBERS/SET
8	G	E12 A49 900	COMPRESSOR	MC	1	RN092WHDHT
9	G	E12 A49 661	STOP VALVE(GAS)		1	ϕ3/8
10	G	E12 A49 662	STOP VALVE(LIQUID)		1	ϕ1/4
11	G	E12 A54 233	BACK PANEL		1	
12	G	E12 A49 245	SERVICE PANEL		1	
13	G	E12 A50 374	TERMINAL BLOCK	TB1	1	3P
14	G	E12 A49 374	TERMINAL BLOCK	TB2	1	2P
15	G	E12 A49 350	OUTDOOR FAN CAPACITOR	C2	1	7.0μF/250VAC
16	G	E12 545 353	COMPRESSOR CAPACITOR	C1	1	70μF/220VAC
17	G	E12 A49 340	COMPRESSOR CONTACTOR	52C	1	
18	G	E12 A49 641	SERVICE PORT		2	1PCE/SET
19	G	E12 900 293	SEPARATOR		1	
20	G	E12 929 523	CONDENSER NET		1	
21	G	E12 900 515	MOTOR SUPPORT		1	
22	G	E12 927 297	TOP PANEL		1	
23	G	E12 441 936	CAPILLARY TUBE		1	O.D. 0.118 x I.D. 0.055x21-21/32
24	G	E12 282 383	SURGE ABSORBER	DSAR	1	

MU-A12WA
2. OUTDOOR UNIT
STRUCTURAL PARTS, ELECTRICAL PARTS AND FUNCTIONAL PARTS

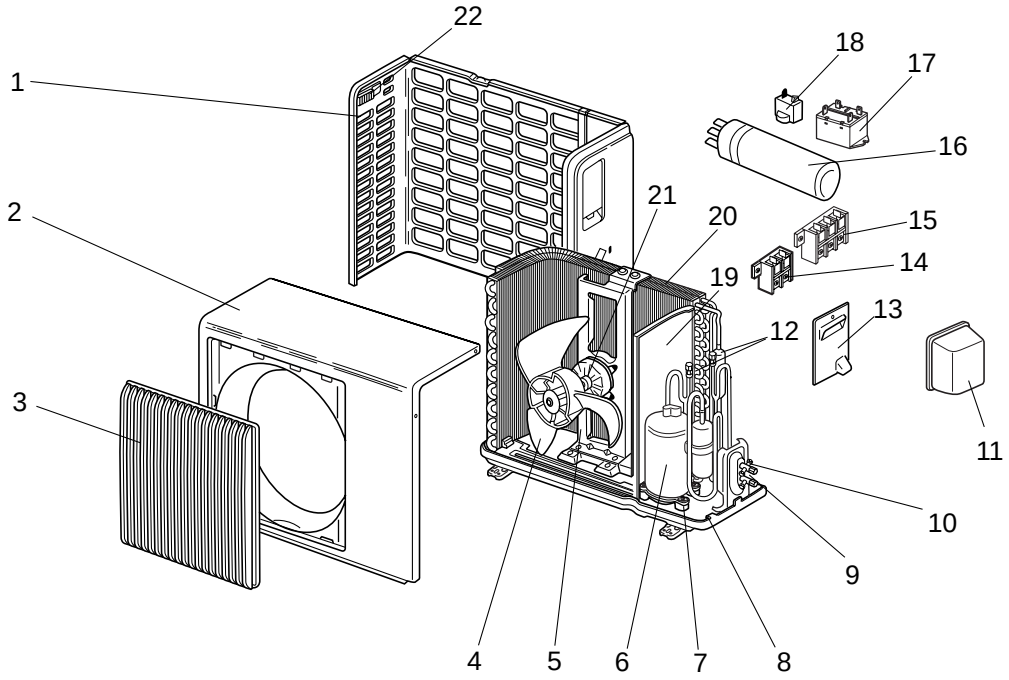

Part number that is circled is not shown in the illustration.

No.	RoHS	Part No.	Part name	Symbol in Wiring Diagram	Q'ty/unit		Remarks
					MU-A12WA	MU-A12WA-1	
1	G	E12 A50 233	BACK PANEL		1	1	
2	G	E12 817 232	CABINET		1	1	
3	G	E12 817 521	GRILLE		1	1	
4	G	E12 141 501	PROPELLER		1	1	
5	G	E12 139 515	MOTOR SUPPORT		1	1	
6	G	E12 A50 900	COMPRESSOR	MC	1	1	RN110WHDHT
7	G	E12 075 506	COMPRESSOR RUBBER SET		3	3	3RUBBERS/SET
8	G	E12 A27 290	BASE		1	1	
9	G	E12 A50 661	STOP VALVE(GAS)		1	1	ϕ1/2
10	G	E12 A50 662	STOP VALVE(LIQUID)		1	1	ϕ1/4
11	G	E12 819 650	VALVE COVER		1	1	
12	G	E12 A49 641	SERVICE PORT		2	2	1PCE / SET
13	G	E12 A50 245	SERVICE PANEL		1	1	
14	G	E12 A49 374	TERMINAL BLOCK	TB2	1	1	2P
15	G	E12 A50 374	TERMINAL BLOCK	TB1	1	1	3P
16	G	E12 A50 353	COMPRESSOR CAPACITOR	C1	1	1	75μF/220V AC
17	G	E12 A49 340	COMPRESSOR CONTACTOR	52C	1	1	
18	G	E12 A50 350	OUTDOOR FAN CAPACITOR	C2	1	1	9.5μF/250V AC
19	G	E12 A50 293	SEPARATOR		1	1	
20	G	E12 A50 630	OUTDOOR HEAT EXCHANGER		1	1	
21	G	E12 A50 301	OUTDOOR FAN MOTOR	MF	1	1	RA6W50-□□
22	G	E12 817 009	HANDLE		1	1	
23	G	E12 134 936	CAPILLARY TUBE		1	1	O.D. 0.118 X I.D. 0.063 X27-9/26
24	G	E12 890 383	SURGE ABSORBER		1	1	

Mr.SLIM™

MITSUBISHI ELECTRIC CORPORATION
HEAD OFFICE: TOKYO BLDG., 2-7-3, MARUNOUCHI, CHIYODA-KU, TOKYO 100-8310, JAPAN

© Copyright 2006 MITSUBISHI ELECTRIC ENGINEERING CO.,LTD.
Distributed in May 2006. No.OB449 REVISED EDITION-A 7
Distributed in Mar. 2006. No.OB449 7
Made in Japan

New publication, effective May 2006
Specifications subject to change without notice.