MITSUBISHI ELECTRIC

SPLIT-TYPE AIR CONDITIONERS

Revision K:
- MXZ-2C20/3C24/3C30/4C36/5C42NA4 - U1 and MXZ-2C20/3C24/3C30NAHZ4 - U1 have been added.

OBB702 REVISED EDITION-J is void.

OUTDOOR UNIT

HFC utilized R410A

No. OBB702
REVISED EDITION-K

PARTS CATALOG

Models

MXZ-2C20NA2 - U1, U4
MXZ-2C20NA3 - U1
MXZ-2C20NA4 - U1
MXZ-3C24NA
MXZ-3C24NA2 - U1
MXZ-3C24NA3 - U1
MXZ-3C24NA4 - U1
MXZ-3C30NA
MXZ-3C30NA2 - U1
MXZ-3C30NA3 - U1
MXZ-3C30NA4 - U1
MXZ-4C36NA
MXZ-4C36NA2 - U1
MXZ-4C36NA3 - U1
MXZ-4C36NA4 - U1
MXZ-5C42NA
MXZ-5C42NA2 - U1
MXZ-5C42NA3 - U1
MXZ-5C42NA4 - U1
MXZ-2C20NAHZ
MXZ-2C20NAHZ2 - U1
MXZ-2C20NAHZ3 - U1
MXZ-2C20NAHZ4 - U1
MXZ-3C24NAHZ
MXZ-3C24NAHZ2 - U1
MXZ-3C24NAHZ3 - U1
MXZ-3C24NAHZ4 - U1
MXZ-3C30NAHZ
MXZ-3C30NAHZ2 - U1
MXZ-3C30NAHZ3 - U1
MXZ-3C30NAHZ4 - U1

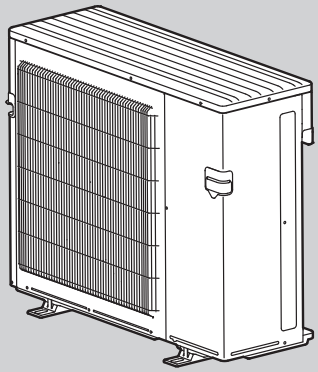

MXZ-3C24NA **MXZ-3C30NA** **MXZ-4C36NA**
MXZ-3C24NA2 **MXZ-3C30NA2** **MXZ-4C36NA2**
MXZ-3C24NA3 **MXZ-3C30NA3** **MXZ-4C36NA3**
MXZ-3C24NA4 **MXZ-3C30NA4** **MXZ-4C36NA4**

CONTENTS

1. SERVICE PARTS LIST ····· 2
2. OPTIONAL PARTS ····· 58

SERVICE MANUAL (OBH702)

Revision A:
• MXZ-3C24NA, MXZ-3C30NA and MXZ-4C36NA have been added.

Revision B:
• The part number of the ice guard for MXZ-5C42NA has been corrected.

Revision C:
• MXZ-3C24/3C30/4C36/5C42NA2-U1 and MXZ-2C20/3C24/3C30NAHZ2-U1 have been added.

Revision D:
• MXZ-2C20NA2-U1 has been added.

Revision E:
• Some descriptions have been modified.

Revision F:
• MXZ-2C20NA2-U4 has been added.
• Some descriptions have been modified.

Revision G:
• MXZ-2C20/3C24/3C30/4C36/5C42NA3-U1 and MXZ-2C20/3C24/3C30NAHZ3-U1 have been added.

Revision H:
• COMP FELT (TOP & BODY) for MXZ-3C24/3C30/4C36NA and MXZ-3C24/3C30/4C36NA2-U1 have been added.

Revision J:
• Part numbers of OUTDOOR CONTROL P.C. BOARD and THERMISTOR SET for MXZ-2C20/3C24/3C30NAHZ3-U1 and MXZ-5C42NA3-U1 have been changed.

Revision M:
• MXZ-2C20/3C24/3C30/4C36/5C42NA4-U1 and MXZ-2C20/3C24/3C30NAHZ4-U1 have been added.

1 SERVICE PARTS LIST

MXZ-2C20NA2 MXZ-2C20NA3

1-1. OUTDOOR UNIT STRUCTURAL PARTS AND FUNCTIONAL PARTS

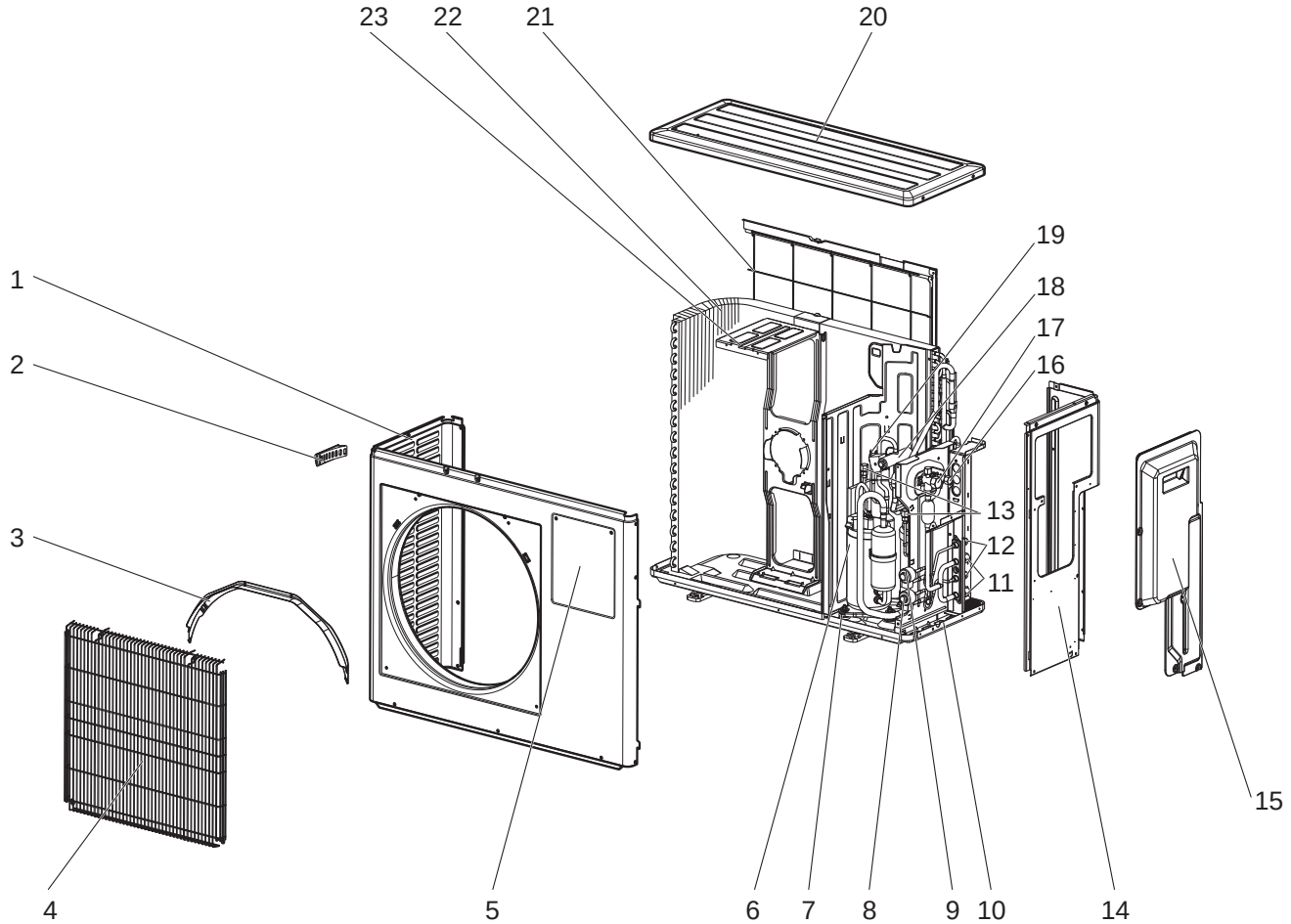

1-1. OUTDOOR UNIT STRUCTURAL PARTS AND FUNCTIONAL PARTS

1. The part quantity below indicates the required number of pieces per unit.
2. The circled No. indicates that the part is not shown in the figure.

No.	Part No.	Part Name	MXZ-2C20NA2-U1	MXZ-2C20NA2-U4	MXZ-2C20NA3-U1	Symbol in Wiring Diagram	Remarks
1	E22 T07 232	CABINET	1	1			
1	E22 06T 232	CABINET			1		
2	E22 817 009	HANDLE	1	1	1		
3	E22 J69 531	ICE GUARD	1	1	1		
4	E22 J69 521	GRILLE	1	1	1		
5	E22 T07 246	SUB PANEL	1	1	1		
6	E22 01B 900	COMPRESSOR	1	1	1	MC	SNB140FQUH2T
7	E22 C34 506	COMPRESSOR RUBBER SET	3	3	3		3 RUBBERS SET
8	E22 851 640	EXPANSION VALVE	1	1	1		A room
8	E22 R51 493	EXPANSION VALVE COIL	1	1	1	LEV A	A room, Connector: WHITE
9	E22 851 640	EXPANSION VALVE	1	1	1		B room
9	E22 R52 493	EXPANSION VALVE COIL	1	1	1	LEV B	B room, Connector: RED
10	E22 T07 290	BASE	1	1	1		
11	E22 D36 666	UNION(GAS)(ø9.52)	2	2	2		ø3/8
12	E22 D36 667	UNION(LIQUID)(ø6.35)	2	2	2		ø1/4
13	E22 E79 641	SERVICE PORT	2	2	2		
14	E22 R51 233	BACK PANEL	1	1	1		
15	E22 R51 245	SERVICE PANEL	1	1	1		
16	E22 D36 662	STOP VALVE (LIQUID) (ø9.52)	1	1	1		ø3/8
17	E22 C88 661	STOP VALVE (GAS) (ø15.88)	1	1	1		ø5/8
18	E22 A56 961	4-WAY VALVE	1	1	1		
19	E22 W66 646	HIGH PRESSURE SWITCH	1	1	1	HPS	4.41 MPa (45.0 kg/cm^2)
20	E22 819 297	TOP PANEL	1	1			
20	E22 06T 297	TOP PANEL			1		
21	E22 J69 523	REAR GUARD	1	1	1		
22	E22 01B 630	OUTDOOR HEAT EXCHANGER	1	1	1		
23	E22 J69 515	MOTOR SUPPORT	1	1	1		
㉔	E22 938 937	CAPILLARY TUBE (ø3.6 × ø2.4 × 500)	8	8			O.D.0.14 x I.D.0.09 x 19.68
㉕	E22 939 936	CAPILLARY TUBE (ø4.0 × ø2.8 × 100)	2	2	2		O.D.0.16 x I.D.0.11 x 3.94
㉖	E22 C18 959	POWER RECEIVER	1	1	1		
㉗	E22 853 640	EXPANSION VALVE	1	1	1		R
㉗	E22 T07 493	EXPANSION VALVE COIL	1	1	1	LEV R	Connector: BLUE

MXZ-2C20NA2 MXZ-2C20NA3
1-2. OUTDOOR UNIT FUNCTIONAL PARTS AND ELECTRICAL PARTS

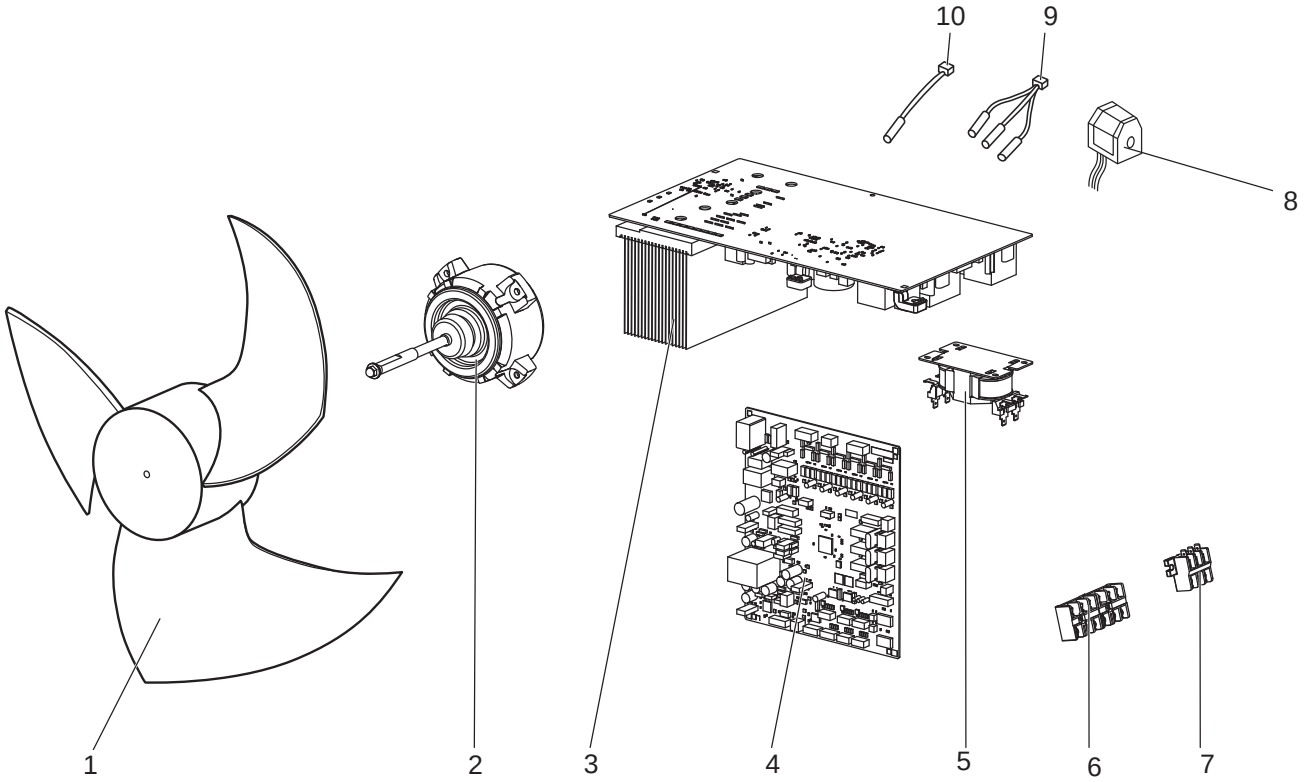

1-2. OUTDOOR UNIT FUNCTIONAL PARTS AND ELECTRICAL PARTS

1. The part quantity below indicates the required number of pieces per unit.

No.	Part No.	Part Name	MXZ-2C20NA2-U1	MXZ-2C20NA2-U4	MXZ-2C20NA3-U1	Symbol in Wiring Diagram	Remarks
1	E22 851 501	PROPELLER FAN	1	1	1		
2	E22 01B 301	OUTDOOR FAN MOTOR	1			MF	
2	E22 96R 301	OUTDOOR FAN MOTOR		1	1	MF	
3	E22 01B 440	POWER BOARD	1	1			Includes heat sink and RT64
3	E22 06T 440	POWER BOARD			1		Includes heat sink and RT64
4	E22 10J 450	OUTDOOR CONTROL P.C. BOARD	1				
4	E22 96R 450	OUTDOOR CONTROL P.C. BOARD		1			
4	E22 06T 450	OUTDOOR CONTROL P.C. BOARD			1		
5	E22 R51 337	REACTOR	1	1	1	L	
6	E22 C92 375	TERMINAL BLOCK	2	2	2	TB2~3	Indoor unit connecting
7	E22 01B 374	TERMINAL BLOCK	1	1	1	TB1	
8	E22 01B 490	R.V. COIL	1	1	1	21S4	
9	E22 T07 308	THERMISTOR SET	1	1		RT61, RT62, RT68	DEFROST, DISCHARGE, OUTDOOR HEAT EXCHANGER
9	E22 01L 308	THERMISTOR SET			1	RT61, RT62, RT68	DEFROST, DISCHARGE, OUTDOOR HEAT EXCHANGER
10	E22 T07 309	AMBIENT TEMPERATURE THERMISTOR	1	1	1	RT65	

MXZ-2C20NA4
1-3. OUTDOOR UNIT STRUCTURAL PARTS AND FUNCTIONAL PARTS

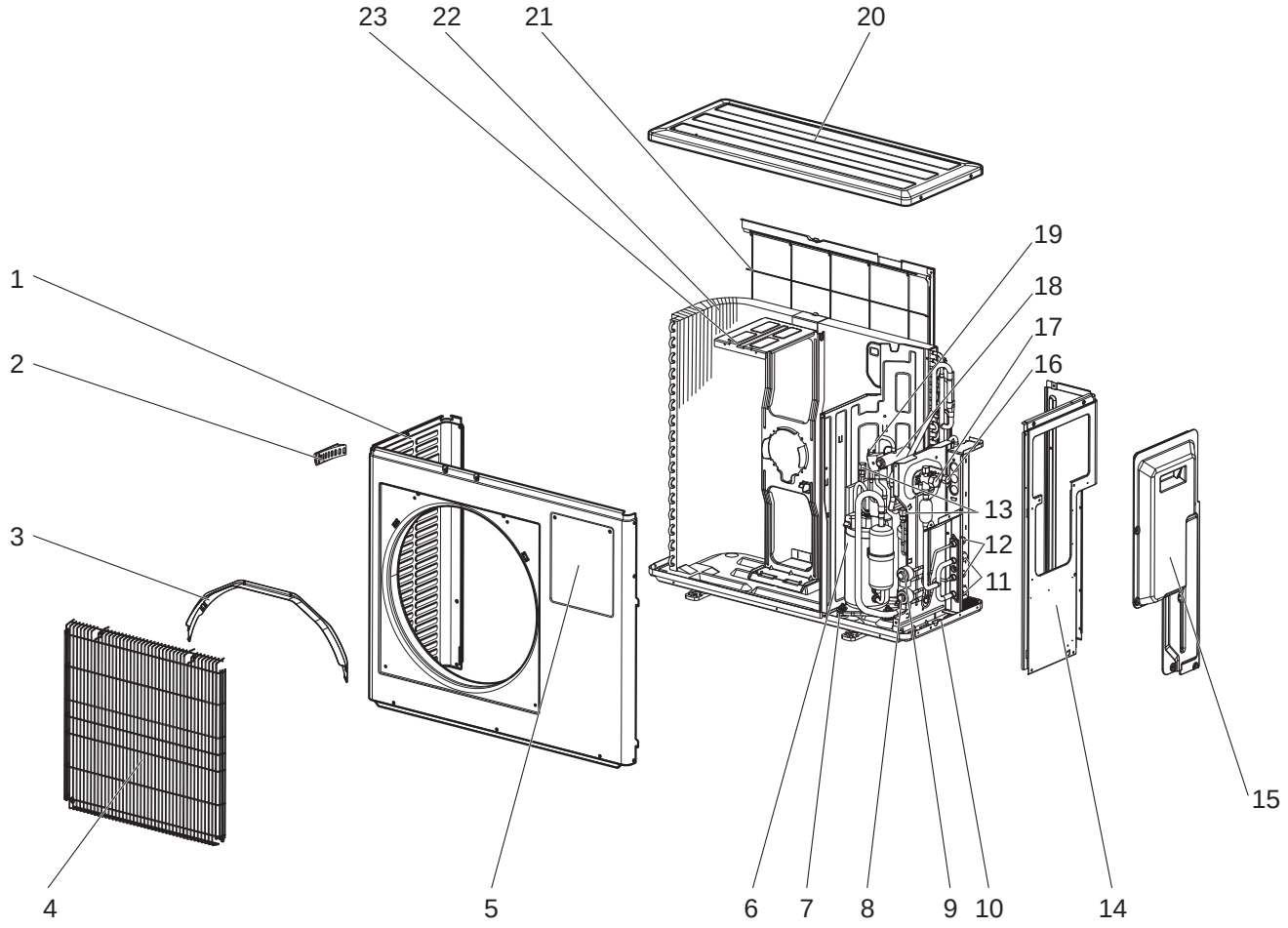

1-3. OUTDOOR UNIT STRUCTURAL PARTS AND FUNCTIONAL PARTS

1. The part quantity below indicates the required number of pieces per unit.
2. The circled No. indicates that the part is not shown in the figure.

No.	Part No.	Part Name	MXZ-2C20NA4-U1	Symbol in Wiring Diagram	Remarks
1	E22 06T 232	CABINET	1		
2	E22 817 009	HANDLE	1		
3	E22 J69 531	ICE GUARD	1		
4	E22 J69 521	GRILLE	1		
5	E22 T07 246	SUB PANEL	1		
6	E22 06T 900	COMPRESSOR	1	MC	SNB140FQUH2T
7	E22 C34 506	COMPRESSOR RUBBER SET	3		3 RUBBERS SET
8	E22 71W 640	EXPANSION VALVE	1		A room
8	E22 92C 493	EXPANSION VALVE COIL	1	LEV A	A room, Connector: WHITE
9	E22 71W 640	EXPANSION VALVE	1		B room
9	E22 93C 493	EXPANSION VALVE COIL	1	LEV B	B room, Connector: RED
10	E22 T07 290	BASE	1		
11	E22 D36 666	UNION(GAS)(ø9.52)	2		ø3/8
12	E22 D37 667	UNION(LIQUID)(ø6.35)	2		ø1/4
13	E22 E79 641	SERVICE PORT	2		
14	E22 R51 233	BACK PANEL	1		
15	E22 R51 245	SERVICE PANEL	1		
16	E22 71W 662	STOP VALVE (LIQUID) (ø9.52)	1		ø3/8
17	E22 C88 661	STOP VALVE (GAS) (ø15.88)	1		ø5/8
18	E22 A56 961	4-WAY VALVE	1		
19	E22 71W 646	HIGH PRESSURE SWITCH	1	HPS	4.41 MPa (45.0 kg/cm^2)
20	E22 06T 297	TOP PANEL	1		
21	E22 J69 523	REAR GUARD	1		
22	E22 71W 630	OUTDOOR HEAT EXCHANGER	1		
23	E22 J69 515	MOTOR SUPPORT	1		
24	E22 71W 936	CAPILLARY TUBE (ø4.0 × ø2.8 × 100)	2		O.D.0.16 x I.D.0.11 x 3.94
25	E22 C18 959	POWER RECEIVER	1		
26	E22 853 640	EXPANSION VALVE	1		R
26	E22 T07 493	EXPANSION VALVE COIL	1	LEV R	Connector: BLUE

MXZ-2C20NA4
1-4. OUTDOOR UNIT FUNCTIONAL PARTS AND ELECTRICAL PARTS

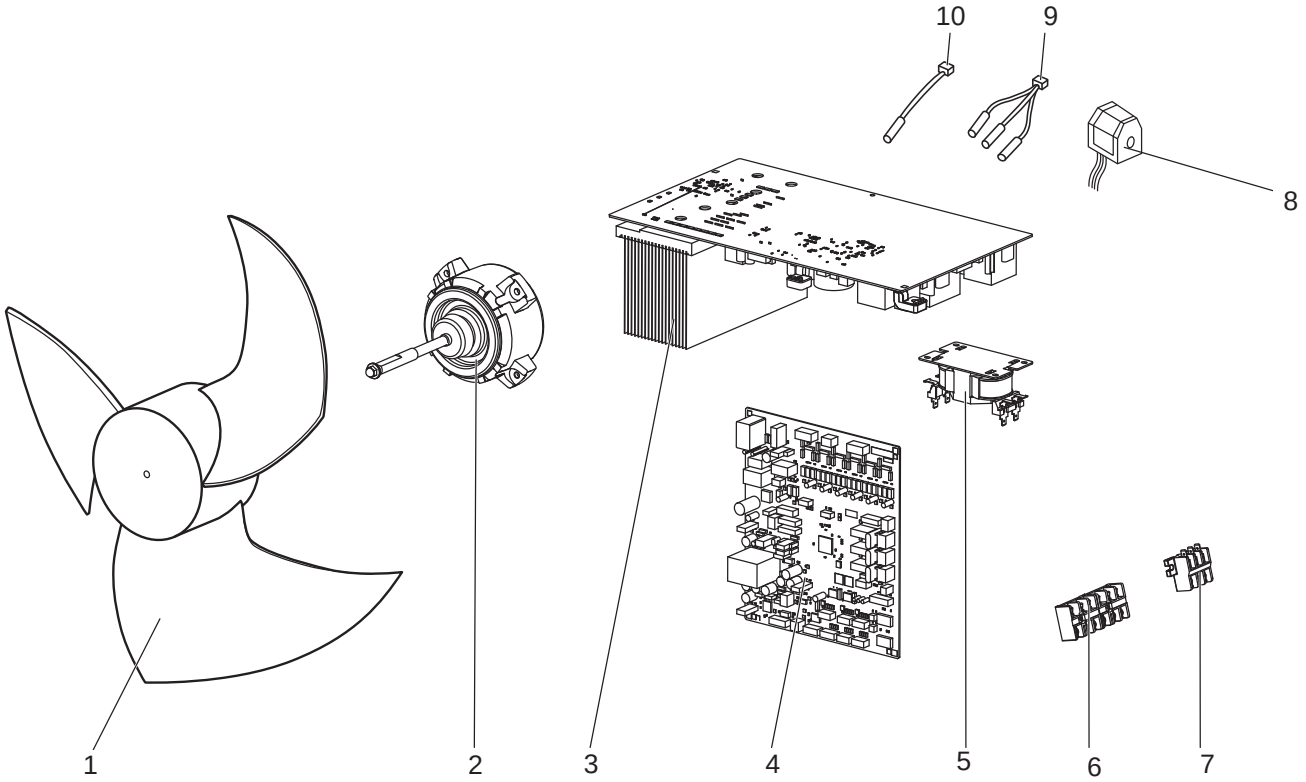

1-4. OUTDOOR UNIT FUNCTIONAL PARTS AND ELECTRICAL PARTS

1. The part quantity below indicates the required number of pieces per unit.

No.	Part No.	Part Name	MXZ-2C20NA4-U1	Symbol in Wiring Diagram	Remarks
1	E22 851 501	PROPELLER FAN	1		
2	E22 01B 301	OUTDOOR FAN MOTOR	1	MF	
3	E22 71W 440	POWER BOARD	1		Includes heat sink and RT64
4	E22 71W 450	OUTDOOR CONTROL P.C. BOARD	1		
5	E22 R51 337	REACTOR	1	L	
6	E22 C92 375	TERMINAL BLOCK	2	TB2~3	Indoor unit connecting
7	E22 01B 374	TERMINAL BLOCK	1	TB1	
8	E22 01B 490	R.V. COIL	1	21S4	
9	E22 01L 308	THERMISTOR SET	1	RT61, RT62, RT68	DEFROST, DISCHARGE OUTDOOR HEAT EXCHANGER
10	E22 07T 309	AMBIENT TEMPERATURE THERMISTOR	1	RT65	

MXZ-3C24NA MXZ-3C30NA MXZ-4C36NA
MXZ-3C24NA2 MXZ-3C30NA2 MXZ-4C36NA2

1-5. OUTDOOR UNIT STRUCTURAL PARTS AND FUNCTIONAL PARTS

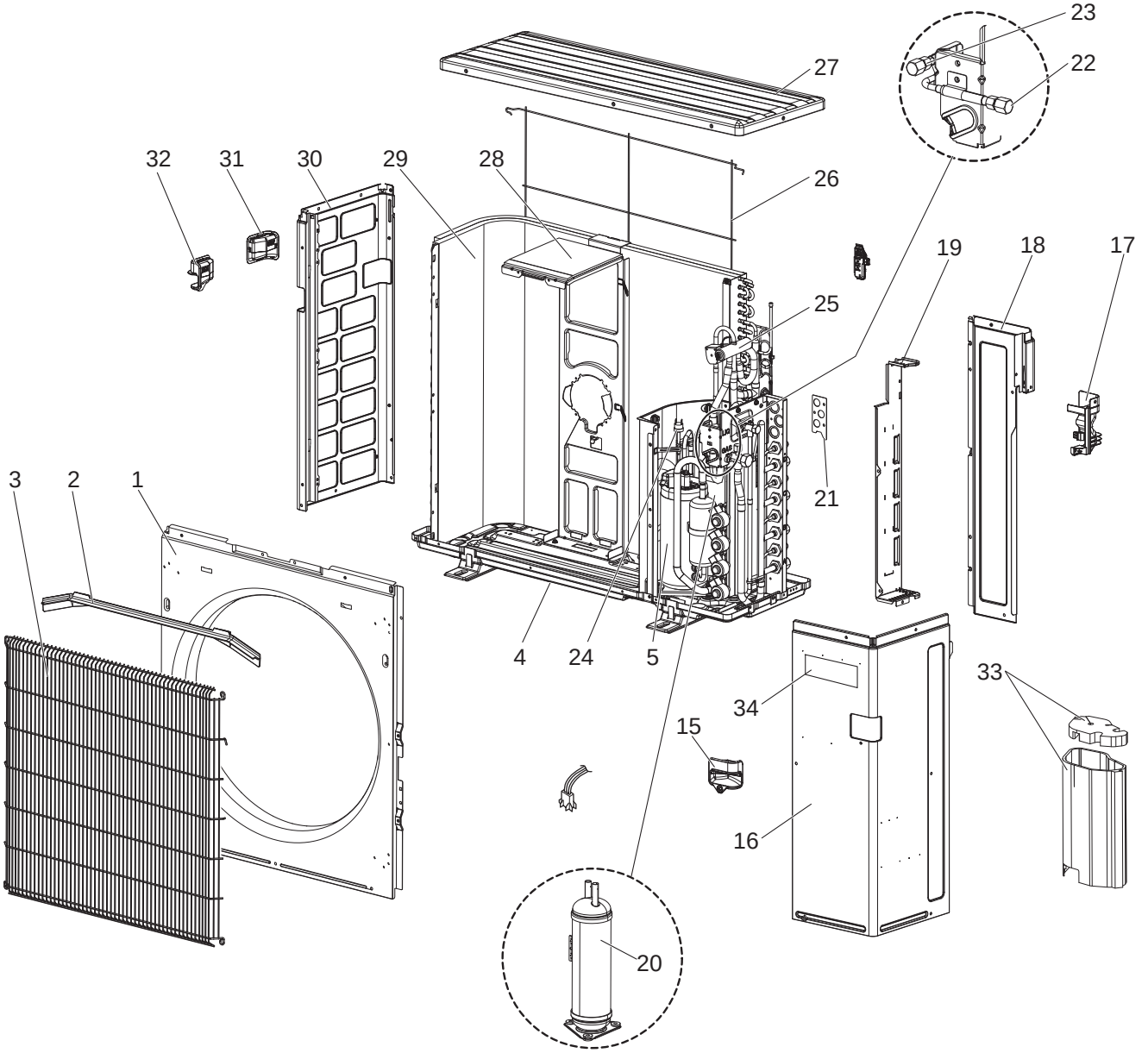

MXZ-4C36NA MXZ-4C36NA2

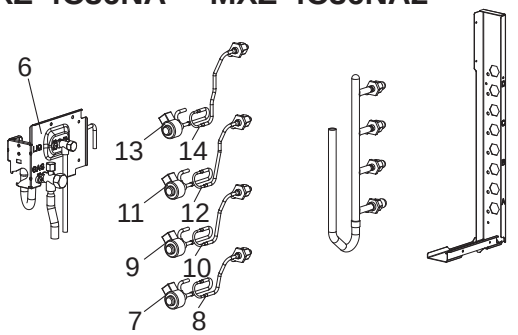

MXZ-3C24NA MXZ-3C30NA
MXZ-3C24NA2 MXZ-3C30NA2

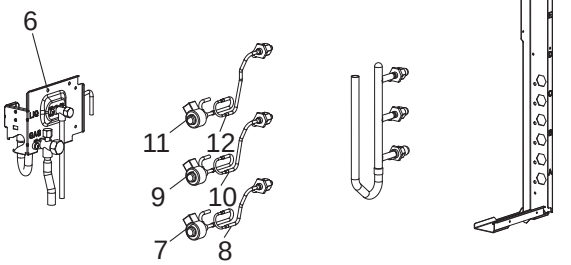

1-5. OUTDOOR UNIT STRUCTURAL PARTS AND FUNCTIONAL PARTS

1. The part quantity below indicates the required number of pieces per unit.
2. The circled No. indicates that the part is not shown in the figure.

No.	Part No.	Part Name	MXZ-3C24NA	MXZ-3C24NA2-U1	MXZ-3C30NA	MXZ-3C30NA2-U1	MXZ-4C36NA	MXZ-4C36NA2-U1	Symbol in Wiring Diagram	Remarks
1	T7W E21 668	FRONT PANEL	1		1		1			
1	T7W E22 668	FRONT PANEL		1		1		1		
2	R01 E02 631	ICE GUARD	1	1	1	1	1	1		
3	R01 E73 691	WIRE GRILLE	1	1	1	1	1	1		
4	T7W E24 686	BASE ASSEMBLY	1		1		1			
4	T7W E25 686	BASE ASSEMBLY		1		1		1		
5	T97 419 607	COMPRESSOR	1	1	1	1	1	1	MC	SNB220FQGMC Includes rubber mounts
6	T7W E06 410	STOP VALVE ASSY	1	1	1	1	1	1		Includes both valves
7	T7W E78 242	LEV COIL	1	1	1	1	1	1	LEV A	A room, Connector: WHITE
8	T7W E56 401	EXPANSION VALVE ASSY	1	1	1	1	1	1	LEV A	A room, Includes union and capillary tube
9	T7W E79 242	LEV COIL	1	1	1	1	1	1	LEV B	B room, Connector: RED
10	T7W E57 401	EXPANSION VALVE ASSY	1	1	1	1	1	1	LEV B	B room, Includes union and capillary tube
11	T7W E80 242	LEV COIL	1	1	1	1	1	1	LEV C	C room Connector: BLUE
12	T7W E58 401	EXPANSION VALVE ASSY	1	1	1	1	1	1	LEV C	C room, Includes union and capillary tube
13	T7W E81 242	LEV COIL					1	1	LEV D	D room, Connector: YELLOW
14	T7W E59 401	EXPANSION VALVE ASSY					1	1	LEV D	D room, Includes union and capillary tube
15	T7W A02 655	HANDLE (R FRONT)	1	1	1	1	1	1		
16	T7W E23 667	SERVICE PANEL	1	1	1	1	1	1		
17	T7W A03 655	HANDLE (R REAR)	1	1	1	1	1	1		
18	T7W E11 682	REAR PANEL	1	1	1	1	1	1		
19	T7W E38 661	BACK PILLAR	1	1	1	1	1	1		
20	T7W E26 440	ACCUMULATOR	1		1		1			
20	T7W E27 440	ACCUMULATOR		1		1		1		
21	T7W E07 617	CONDUIT PLATE SET	1	1	1	1	1	1		
22	R01 E13 413	SERVICE PORT	1	1	1	1	1	1		
23	R01 E12 413	SERVICE PORT	1	1	1	1	1	1		
24	T7W E11 208	HIGH PRESSURE SWITCH	1		1		1		HPS	4.8 MPa (48.9 kg/cm^2)
24	T7W E13 208	HIGH PRESSURE SWITCH		1		1		1	HPS	4.41 MPa (45.0 kg/cm^2)
25	T7W E06 403	4-WAY VALVE	1	1	1	1	1	1		
26	T7W E06 698	REAR GUARD	1	1	1	1	1	1		
27	T7W E14 641	TOP PANEL	1	1	1	1	1	1		
28	T7W E17 130	MOTOR SUPPORT	1	1	1	1	1	1		
29	T7W E75 408	OUTDOOR HEAT EXCHANGER	1	1	1	1	1	1		Includes capillary tubes and distributor
30	T7W E11 662	SIDE PANEL (L)	1	1	1	1	1	1		
31	T7W A01 655	HANDLE (REAR)	1	1	1	1	1	1		
32	T7W A00 655	HANDLE (FRONT)	1	1	1	1	1	1		
33	T7W TB0 602	COMP FELT (TOP & BODY)	1	1	1	1	1	1		
34	T7W A01 005	BRAND LABEL	1	1	1	1	1	1		
35	T7W A00 508	DAMPER SET	1	1	1	1	1	1		2 PCS SET 95 x 250 T2 (mm)

MXZ-3C24NA MXZ-3C30NA MXZ-4C36NA
MXZ-3C24NA2 MXZ-3C30NA2 MXZ-4C36NA2

1-6. OUTDOOR UNIT FUNCTIONAL PARTS AND ELECTRICAL PARTS

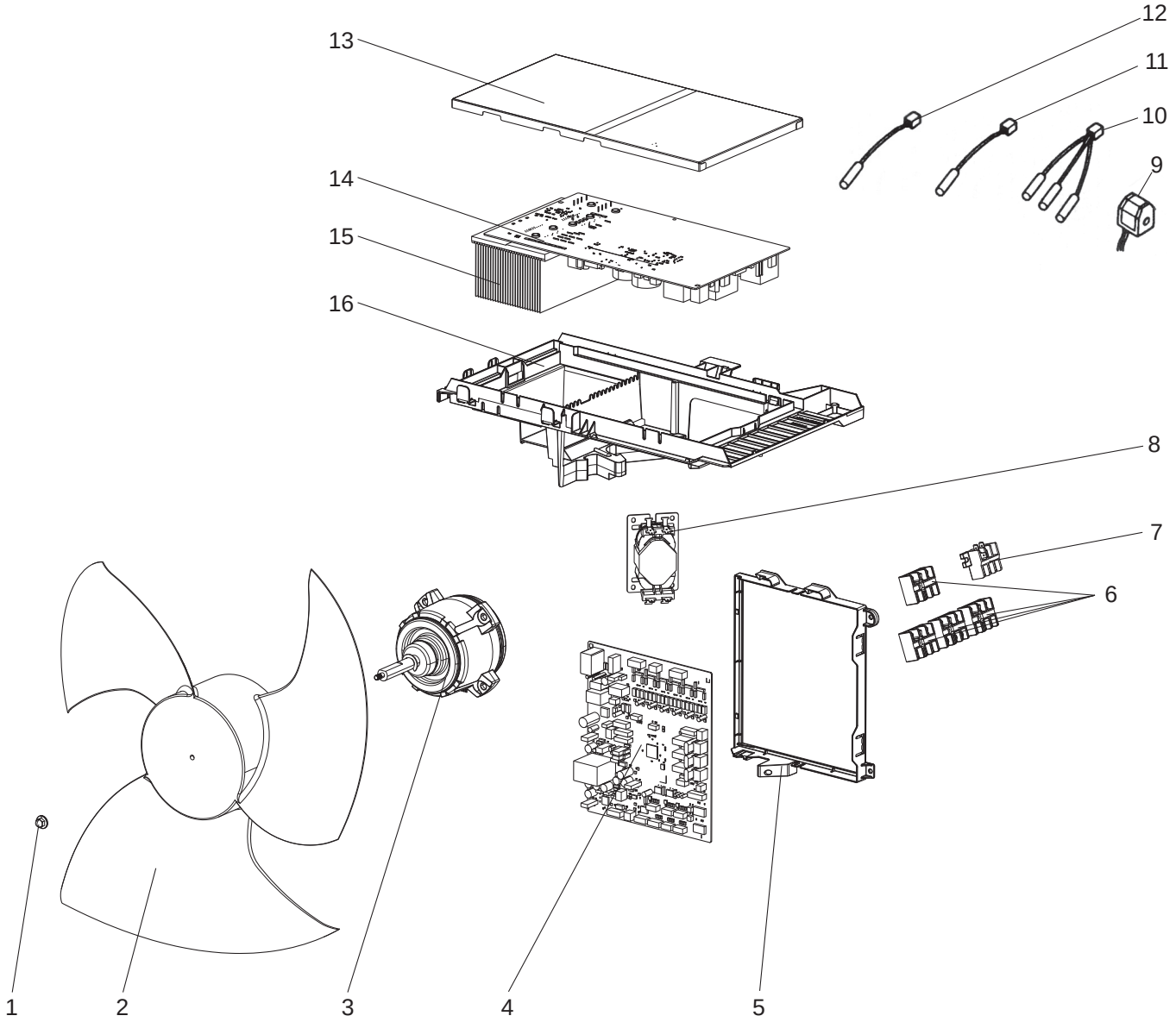

1-6. OUTDOOR UNIT FUNCTIONAL PARTS AND ELECTRICAL PARTS

1. The part quantity below indicates the required number of pieces per unit.
2. The circled No. indicates that the part is not shown in the figure.

No.	Part No.	Part Name	MXZ-3C24NA	MXZ-3C24NA2-U1	MXZ-3C30NA	MXZ-3C30NA2-U1	MXZ-4C36NA	MXZ-4C36NA2-U1	Symbol in Wiring Diagram	Remarks
1	R01 E09 097	PROPELLER FAN NUT	1	1	1	1	1	1		
2	T7W A00 115	PROPELLER FAN	1	1	1	1	1	1		
3	T7W A13 221	OUTDOOR FAN MOTOR	1	1	1	1	1	1	MF	
4	T7W GB1 315	OUTDOOR CONTROL P.C. BOARD	1							
4	T7W GY0 315	OUTDOOR CONTROL P.C. BOARD		1						
4	T7W GC0 315	OUTDOOR CONTROL P.C. BOARD			1					
4	T7W GZ0 315	OUTDOOR CONTROL P.C. BOARD				1				
4	T7W GD1 315	OUTDOOR CONTROL P.C. BOARD					1			
4	T7W H00 315	OUTDOOR CONTROL P.C. BOARD						1		
5	T7W A02 327	CB HOLDER	1	1	1	1	1	1		
6	T7W E13 716	TERMINAL BLOCK	3	3	3	3	4	4	TB2, 3, 4, (5)	Indoor unit connecting 3P (S1,S2,S3)
7	T7W E63 716	TERMINAL BLOCK	1	1	1	1	1	1	TB1	Power supply 3P (L1,L2,GR)
8	T7W E25 259	REACTOR	1	1	1	1	1	1	L	
9	T7W E83 242	R.V. COIL	1	1	1	1	1	1	21S4	
10	T7W E71 202	THERMISTOR	1	1	1	1	1	1	RT61, RT62, RT68	DEFROST, DISCHARGE, OUTDOOR HEAT EXCHANGER
11	T7W E72 202	THERMISTOR	1	1	1	1	1	1	RT65	AMBIENT
12	R01 E99 202	THERMISTOR	1	1	1	1	1	1	RT64	FIN (HEAT SINK)
13	T7W A00 325	PB COVER	1	1	1	1	1	1		
14	T7W AE0 323	OUTDOOR POWER P.C. BOARD	1		1		1			
14	T7W AW0 323	OUTDOOR POWER P.C. BOARD		1		1		1		
15	T7W A03 371	HEAT SINK	1	1	1	1	1	1		
16	T7W A00 327	PB HOLDER	1	1	1	1	1	1		
⑰	T7W A00 510	COMPRESSOR LEAD ASSY SET	1	1	1	1	1	1		

MXZ-3C24NA3 MXZ-3C30NA3 MXZ-4C36NA3
1-7. OUTDOOR UNIT STRUCTURAL PARTS AND FUNCTIONAL PARTS

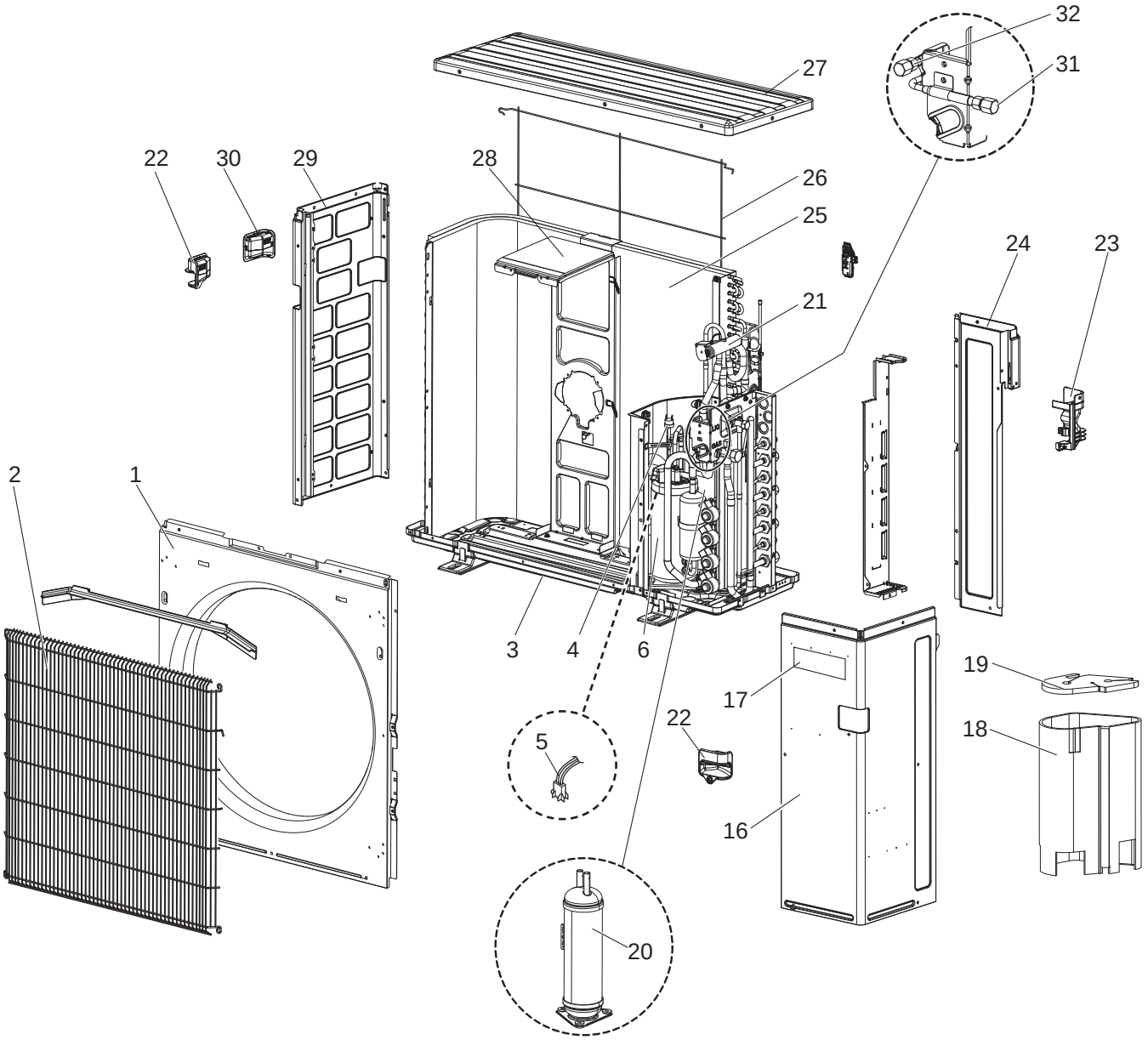

MXZ-4C36NA3

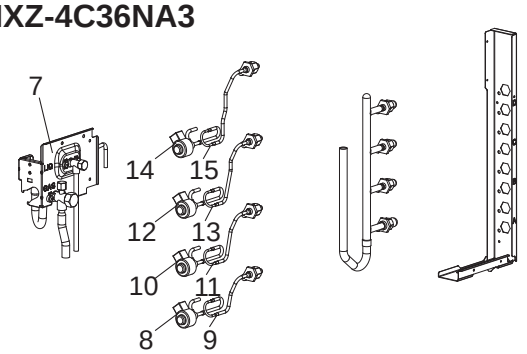

MXZ-3C24NA3 MXZ-3C30NA3

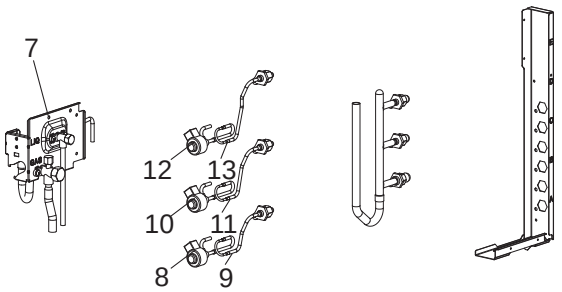

1-7. OUTDOOR UNIT STRUCTURAL PARTS AND FUNCTIONAL PARTS

1. The part quantity below indicates the required number of pieces per unit.
2. The circled No. indicates that the part is not shown in the figure.

No.	Part No.	Part Name	MXZ-3C24NA3-U1	MXZ-3C30NA3-U1	MXZ-4C36NA3-U1	Symbol in Wiring Diagram	Remarks
1	R01 E29 668	FRONT PANEL	1	1	1		
2	R01 E73 691	WIRE GRILLE	1	1	1		
3	T7W E25 686	BASE ASSY	1	1	1		
4	T7W E15 208	H.P.SWITCH UL4.14MPA	1	1	1	HPS	
5	T7W C02 510	LEAD ASSY COMP	1	1	1		
6	T97 419 607	COMPRESSOR	1	1	1	MC	SNB220FQGMC Includes RUBBER MOUNTS
7	T7W E06 410	STOP VALVE ASSY	1	1	1		
8	T7W E73 242	COIL(LEV)/XAP-5P WH	1	1	1	LEV A	A room
9	T7W E56 401	LEV-UNION ASSY-A	1	1	1	LEV A	A room
10	R01 H38 242	COIL(LEV)/XAP-5P RED	1	1	1	LEV B	B room
11	T7W E57 401	LEV-UNION ASSY-B	1	1	1	LEV B	B room
12	T7W E80 242	COIL(LEV)/XAP-5P BLU	1	1	1	LEV C	C room
13	T7W E58 401	LEV-UNION ASSY-C	1	1	1	LEV C	C room
14	T7W E81 242	COIL(LEV)/XAP-5P YEL			1	LEV D	D room
15	T7W E59 401	LEV-UNION ASSY-D			1	LEV D	D room
16	T7W E29 667	SERVICE PANEL	1	1	1		
17	T7W A01 005	BRAND LABEL	1	1	1		
18	T7W B06 602	COMP FELT-SVB22/BODY	1	1	1		
19	T7W T16 602	COMP FELT-T/SNB	1	1	1		
20	T7W E27 440	ACCUMULATOR	1	1	1		
21	R01 E45 403	4WAY VALVE	1	1	1	21S4	
22	R01 E07 655	HANDLE(FRONT)	2	2	2		
23	T7W A03 655	HANDLE(R_REAR)	1	1	1		
24	R01 E24 682	REAR PANEL	1	1	1		
25	T7W F07 408	HEAT EXCHANGER	1	1	1		
26	T7W E06 698	REAR GUARD	1	1	1		
27	T7W E14 641	TOP PANEL	1	1	1		
28	R01 S00 130	MOTOR SUPPORT	1	1	1		
29	T7W E11 662	SIDE PANEL(L)	1	1	1		
30	R01 E08 655	HANDLE(L_REAR)	1	1	1		
31	R01 E13 413	CHARGE PLUG/ST	1	1	1		
32	R01 E12 413	CHARGE PLUG/LB90	1	1	1		
33	T7W A00 508	DAMPER SET	1	1	1		2PCS

MXZ-3C24NA3 MXZ-3C30NA3 MXZ-4C36NA3
1-8. OUTDOOR UNIT FUNCTIONAL PARTS AND ELECTRICAL PARTS

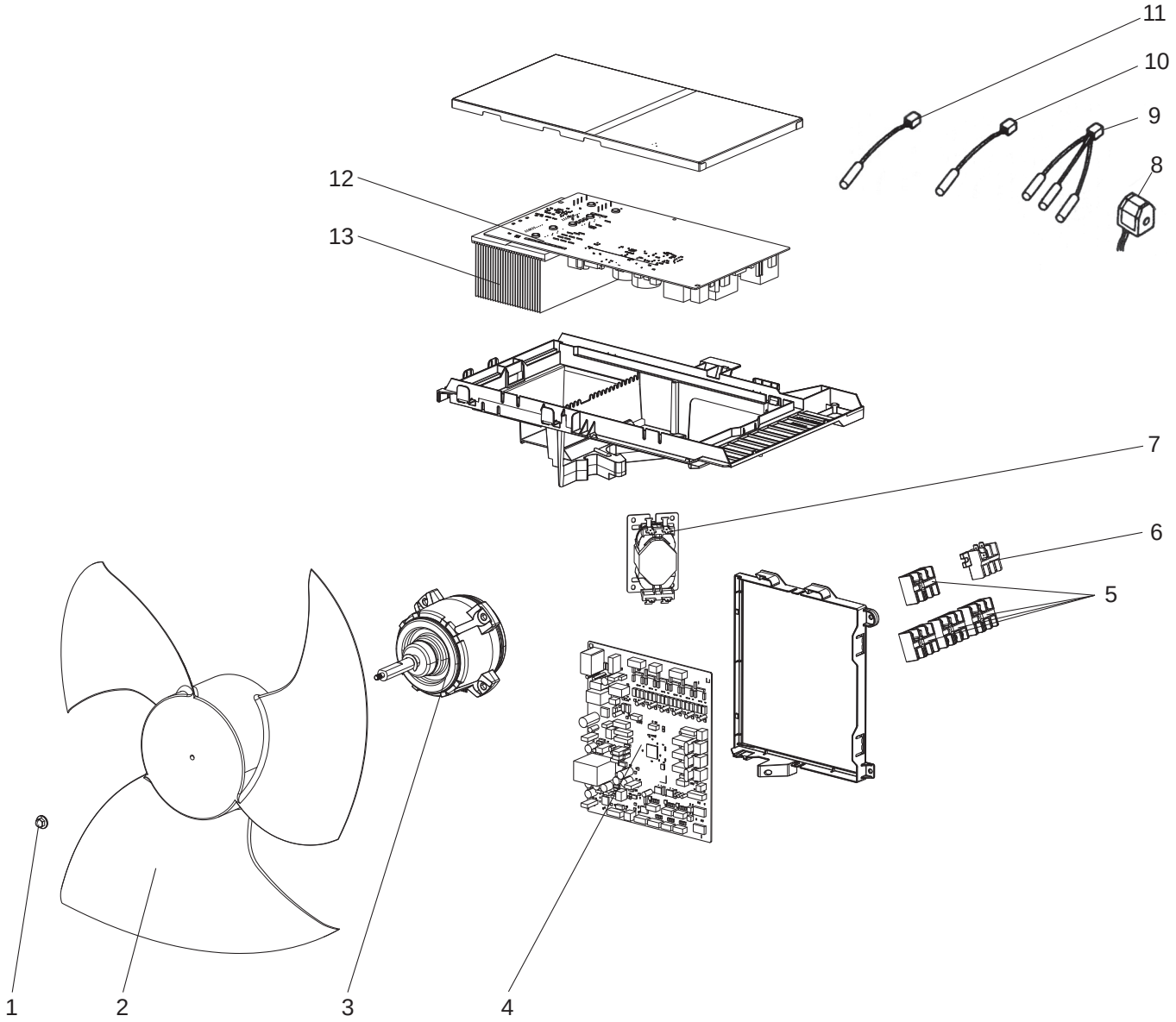

1-8. OUTDOOR UNIT FUNCTIONAL PARTS AND ELECTRICAL PARTS

1. The part quantity below indicates the required number of pieces per unit.

No.	Part No.	Part Name	MXZ-3C24NA3-U1	MXZ-3C30NA3-U1	MXZ-4C36NA3-U1	Symbol in Wiring Diagram	Remarks
1	R01 E09 097	NUT M6	1	1	1		
2	T7W A00 115	PROPELLER FAN	1	1	1		
3	T7W A13 221	FAN MOTOR	1	1	1	MF	
4	T7W M18 315	CONTROLLER BOARD	1				
4	T7W M19 315	CONTROLLER BOARD		1			
4	T7W M20 315	CONTROLLER BOARD			1		
5	T7W E13 716	T.B./S1.S2.S3	3	3	4	TB2-5	INDOOR UNIT CONNECTING
6	T7W E63 716	T.B./L1.L2.GR	1	1	1	TB1	POWER SUPPLY
7	T7W E25 259	REACTOR	1	1	1	L	
8	T7W E83 242	SOLENOID COIL(21S4)	1	1	1	21S4	Includes SCREW
9	R01 M32 202	THERMISTOR DDH	1	1	1	RT61, RT62, RT68	DEFROST, DISCHARGE, HEAT EXCHANGER
10	T7W E72 202	THERMISTOR	1	1	1	RT65	AMBIENT
11	R01 E99 202	THERMISTOR(HS)	1	1	1	RT64	FIN(HEAT SINK)
12	T7W M07 323	POWER BOARD	1	1	1		Includes SILICON
13	T7W A03 371	HEAT SINK	1	1	1		Includes SCREWS

MXZ-3C24NA4 MXZ-3C30NA4 MXZ-4C36NA4
1-9. OUTDOOR UNIT STRUCTURAL PARTS AND FUNCTIONAL PARTS

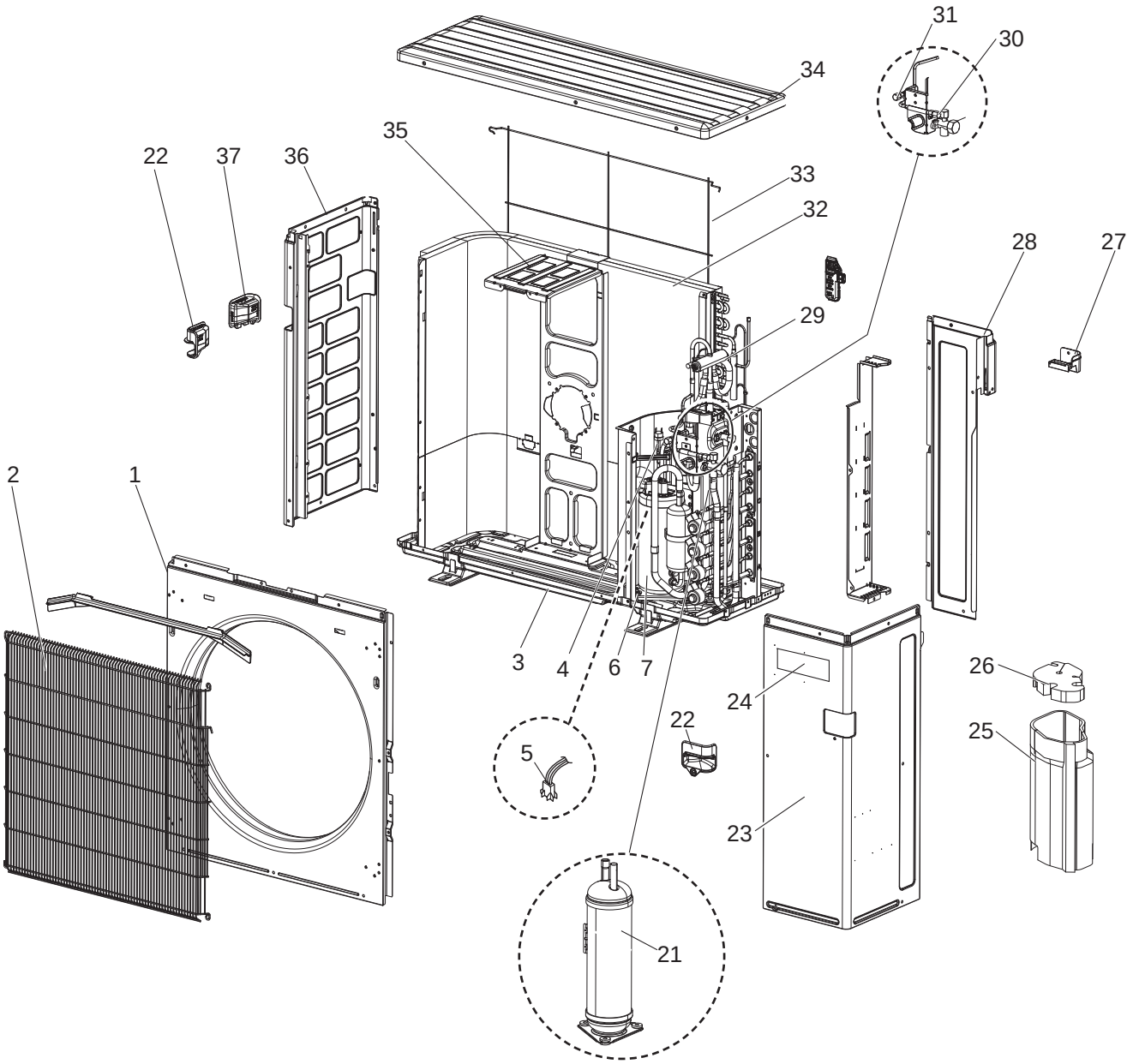

MXZ-4C36NA4

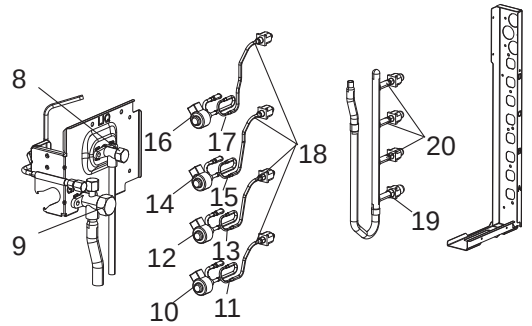

MXZ-3C24NA4 MXZ-3C30NA4

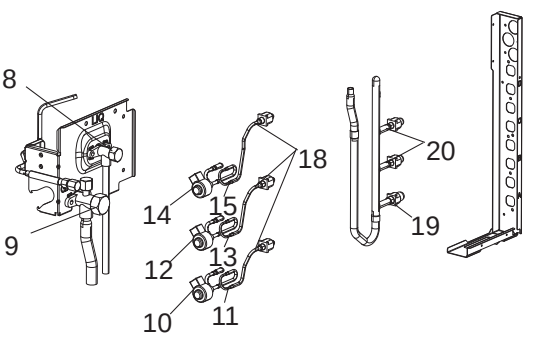

1-9. OUTDOOR UNIT STRUCTURAL PARTS AND FUNCTIONAL PARTS

1. The part quantity below indicates the required number of pieces per unit.
2. The circled No. indicates that the part is not shown in the figure.

No.	Part No.	Part Name	MXZ-3C24NA4-U1	MXZ-3C30NA4-U1	MXZ-4C36NA4-U1	Symbol in Wiring Diagram	Remarks
1	U01 A05 010	FRONT PANEL	1	1	1		
2	U01 A04 521	WIRE GRILLE	1	1	1		
3	U01 A05 290	BASE ASSY	1	1	1		
4	U01 A02 541	H.P.SWITCH UL4.14MPA	1	1	1	HPS	
5	U01 A04 392	LEAD ASSY COMP	1	1	1		
6	U01 A01 506	COMPRESSOR RUBBER MOUNT	3	3	3		3 pcs/set
7	U01 A11 900	COMPRESSOR	1	1	1	MC	SNB220FCGMC Includes RUBBER MOUNTS
8	U01 A05 661	STOP VALVE (LIQ) '3/8	1	1	1		for liquid
9	U01 A06 661	STOP VALVE (GAS) '5/8	1	1	1		for gas
10	U01 A03 493	EXPANSION VALVE COIL	1	1	1	LEV A	A room
11	U01 A03 401	EXPANSION VALVE	1	1	1		for LEV A
12	U01 A04 493	EXPANSION VALVE COIL	1	1	1	LEV B	B room
13	U01 A03 401	EXPANSION VALVE	1	1	1		for LEV B
14	U01 A05 493	EXPANSION VALVE COIL	1	1	1	LEV C	C room
15	U01 A03 401	EXPANSION VALVE	1	1	1		for LEV C
16	U01 A06 493	EXPANSION VALVE COIL			1	LEV D	D room
17	U01 A03 401	EXPANSION VALVE			1		for LEV D
18	U01 A05 662	UNION (LIQ) '1/4	3	3	4		
19	U01 A07 661	UNION (GAS) '1/2	1	1	1		
20	U01 A08 661	UNION (GAS) '3/8	2	2	3		
21	U01 001 281	ACCUMULATOR	1	1	1		
22	U01 001 819	HANDLE(F)	2	2	2		
23	U01 A09 000	SERVICE PANEL	1	1	1		
24	U01 M01 987	BRAND LABEL (MITSUBI)	1	1	1		
25	U01 002 280	COMP FELT (BODY)	1	1	1		
26	U01 001 280	COMP FELT (TOP)	1	1	1		
27	U01 002 819	HANDLE(R_REAR)	1	1	1		
28	U01 A10 000	REAR PANEL	1	1	1		
29	U01 A04 401	4-WAY VALVE	1	1	1	21S4	
30	U01 001 821	CHARGE PLUG	1	1	1		High pressure side
31	U01 A01 641	CHARGE PLUG	1	1	1		Low pressure side
32	U01 A07 630	OUTDOOR HEAT EXCHANGER	1	1	1		Includes insulation (10 x 42 x 42)
33	U01 001 823	REAR GUARD	1	1	1		
34	U01 A11 000	TOP PANEL	1	1	1		Includes notice sticker
35	U01 A02 045	MOTOR SUPPORT	1	1	1		Includes insulation (5 x 188 x 210)
36	U01 A12 000	SIDE PANEL(L)	1	1	1		
37	U01 003 819	HANDLE(L_REAR)	1	1	1		
38	U01 001 294	DAMPER	2	2	2		2PCS/SET
39	U01 A09 936	CAPILLARY TUBE (ø4.0 x ø2.8 x 100)	3	3	4		O.D. 0.16 x I.D. 0.11 x 3.94

MXZ-3C24NA4 MXZ-3C30NA4 MXZ-4C36NA4
1-10. OUTDOOR UNIT FUNCTIONAL PARTS AND ELECTRICAL PARTS

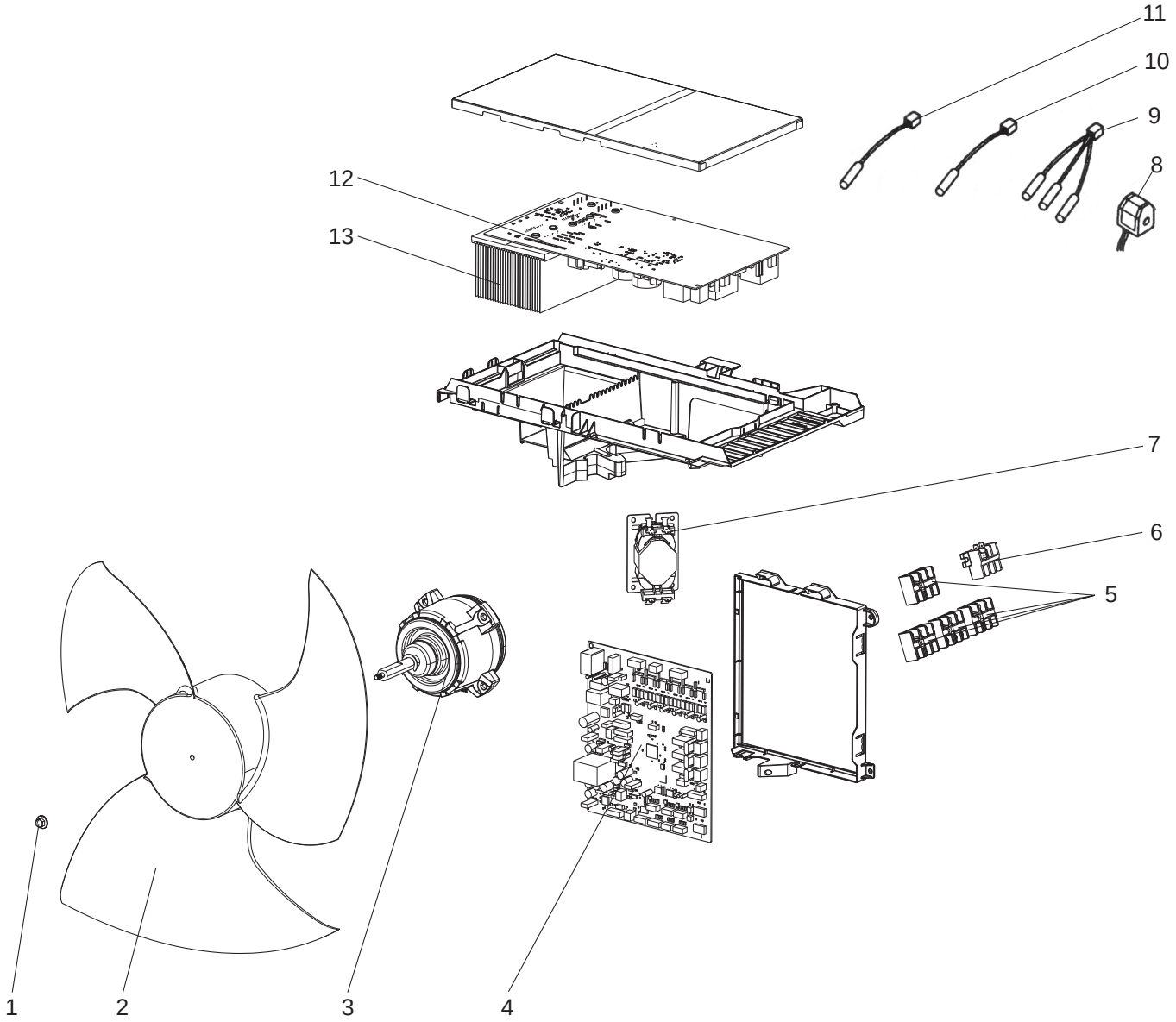

1-10. OUTDOOR UNIT FUNCTIONAL PARTS AND ELECTRICAL PARTS

1. The part quantity below indicates the required number of pieces per unit.

No.	Part No.	Part Name	MXZ-3C24NA4-U1	MXZ-3C30NA4-U1	MXZ-4C36NA4-U1	Symbol in Wiring Diagram	Remarks
1	U01 001 822	NUT M6	1	1	1		
2	U01 A03 501	PROPELLER FAN	1	1	1		
3	U01 A04 300	FAN MOTOR	1	1	1	MF	
4	U01 A70 451	OUTDOOR CONTROL P.C. BOARD	1				
4	U01 A71 451	OUTDOOR CONTROL P.C. BOARD		1			
4	U01 A72 451	OUTDOOR CONTROL P.C. BOARD			1		
5	U01 A07 374	TERMINAL BLOCK / S1.S2.S3	3	3	4	TB2, 3, 4, (5)	INDOOR UNIT CONNECTING
6	U01 A06 374	TERMINAL BLOCK / L1.L2.GR	1	1	1	TB1	POWER SUPPLY
7	U01 A06 337	REACTOR	1	1	1	L	
8	U01 A04 490	SOLENOID COIL(21S4)	1	1	1	21S4	Includes SCREW
9	U01 001 200	THERMISTOR DDH	1	1	1	RT61, RT62, RT68	DEFROST, DISCHARGE, HEAT EXCHANGER
10	U01 002 200	THERMISTOR AMB	1	1	1	RT65	AMBIENT Includes PLASTIC HOLDER
11	U01 003 200	THERMISTOR HS	1	1	1	RT64	FIN(HEAT SINK)
12	U01 A73 451	OUTDOOR POWER P.C. BOARD	1	1	1		Includes SILICON
13	U01 A09 620	HEAT SINK	1	1	1		Includes SCREWS (x 6)

MXZ-5C42NA
1-11. OUTDOOR UNIT STRUCTURAL PARTS AND FUNCTIONAL PARTS

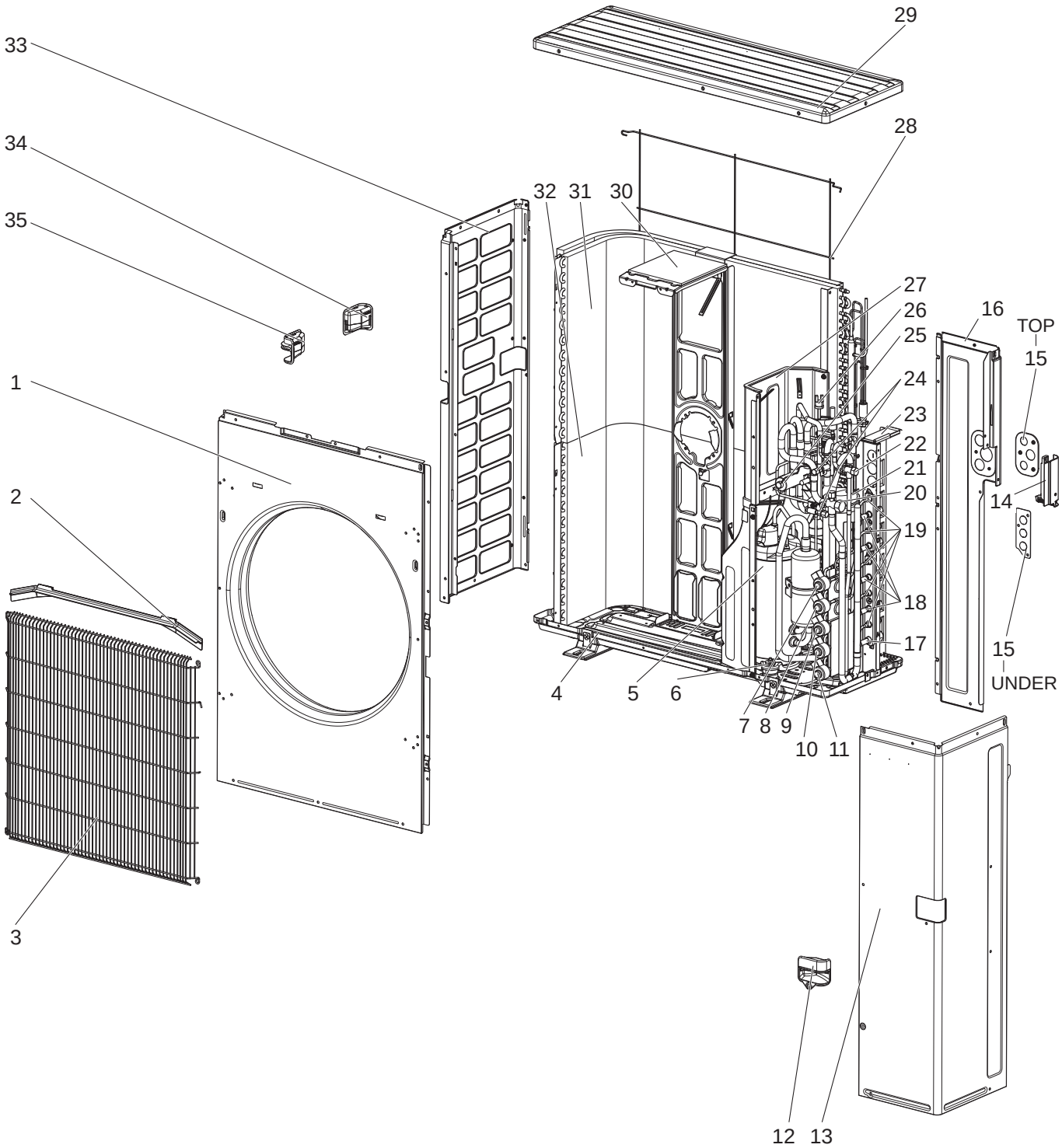

1-11. OUTDOOR UNIT STRUCTURAL PARTS AND FUNCTIONAL PARTS

1. The part quantity below indicates the required number of pieces per unit.
2. The circled No. indicates that the part is not shown in the figure.

No.	Part No.	Part Name	MXZ-5C42NA	Symbol in Wiring Diagram	Remarks
1	E22 N99 232	FRONT PANEL	1		
2	E27 A15 531	ICE GUARD	1		
3	E27 942 521	GRILLE	1		
4	E22 N99 290	BASE ASSEMBLY	1		
5	E22 N99 900	COMPRESSOR	1	MC	MNB33FBTMC-L
6	E22 267 506	COMPRESSOR RUBBER SET	3		3 RUBBERS SET
7	E22 N99 640	EXPANSION VALVE	1		E room
7	E22 P64 493	LEV COIL	1	LEV E	E room
8	E22 N99 640	EXPANSION VALVE	1		D room
8	E22 P63 493	LEV COIL	1	LEV D	D room
9	E22 N99 640	EXPANSION VALVE	1		C room
9	E22 P02 493	LEV COIL	1	LEV C	C room
10	E22 N99 640	EXPANSION VALVE	1		B room
10	E22 P01 493	LEV COIL	1	LEV B	B room
11	E22 N99 640	EXPANSION VALVE	1		A room
11	E22 N99 493	LEV COIL	1	LEV A	A room
12	E22 P01 009	HANDLE	1		
13	E22 N99 245	SERVICE PANEL	1		Without LABEL
14	E22 N99 009	HANDLE (BACK)	1		
15	E22 N99 978	CONDUIT PLATE (TOP)	1		
15	E22 P01 978	CONDUIT PLATE (UNDER)	1		
16	E22 N99 233	BACK PANEL	1		
17	E22 D37 666	UNION (GAS) (ø12.7)	1		ø1/2, A room
18	E22 D36 666	UNION (GAS) (ø9.52)	4		ø3/8, B, C, D, E room
19	E22 D36 667	UNION (LIQUID) (ø6.35)	5		ø1/4, A, B, C, D, E room
20	E22 N99 661	STOP VALVE (GAS) (ø15.88)	1		ø5/8
21	E22 N99 932	ACCUMULATOR	1		
22	E22 N99 662	STOP VALVE (LIQUID) (ø9.52)	1		ø3/8
23	E22 P64 814	BACK PILLAR	1		
24	E22 N99 641	SERVICE PORT	2		
25	E22 N99 961	4-WAY VALVE	1		
26	E22 853 646	HIGH PRESSURE SWITCH	1	HPS	4.8 MPa (48.9 kg/cm^2)
27	E22 N99 293	SEPARATOR	1		
28	E22 N99 523	REAR GUARD	1		
29	E22 N99 297	TOP PANEL	1		
30	E22 P64 515	MOTOR SUPPORT	1		
31	E22 N99 630	OUTDOOR HEAT EXCHANGER (TOP)	1		Includes capillary tubes
32	E22 P01 630	OUTDOOR HEAT EXCHANGER (UNDER)	1		Includes capillary tubes
33	E22 N99 086	SIDE PANEL-L	1		
34	E27 943 009	HANDLE (REAR)	1		
35	E27 942 009	HANDLE (FRONT)	1		
36	E22 N99 492	2-WAY SOLENOID VALVE	1		
37	E22 N99 936	CAPILLARY TUBE (ø4.0 x ø3.0 x 200)	2		O.D. 0.16 x I.D. 0.12 x 7.88
38	E22 939 936	CAPILLARY TUBE (ø4.0 x ø2.8 x 100)	5		O.D. 0.16 x I.D. 0.11 x 3.94
39	E22 820 936	CAPILLARY TUBE (ø2.5 x ø0.6 x 1000)	1		O.D. 0.10 x I.D. 0.02 x 39.37

MXZ-5C42NA
1-12. OUTDOOR UNIT FUNCTIONAL PARTS AND ELECTRICAL PARTS

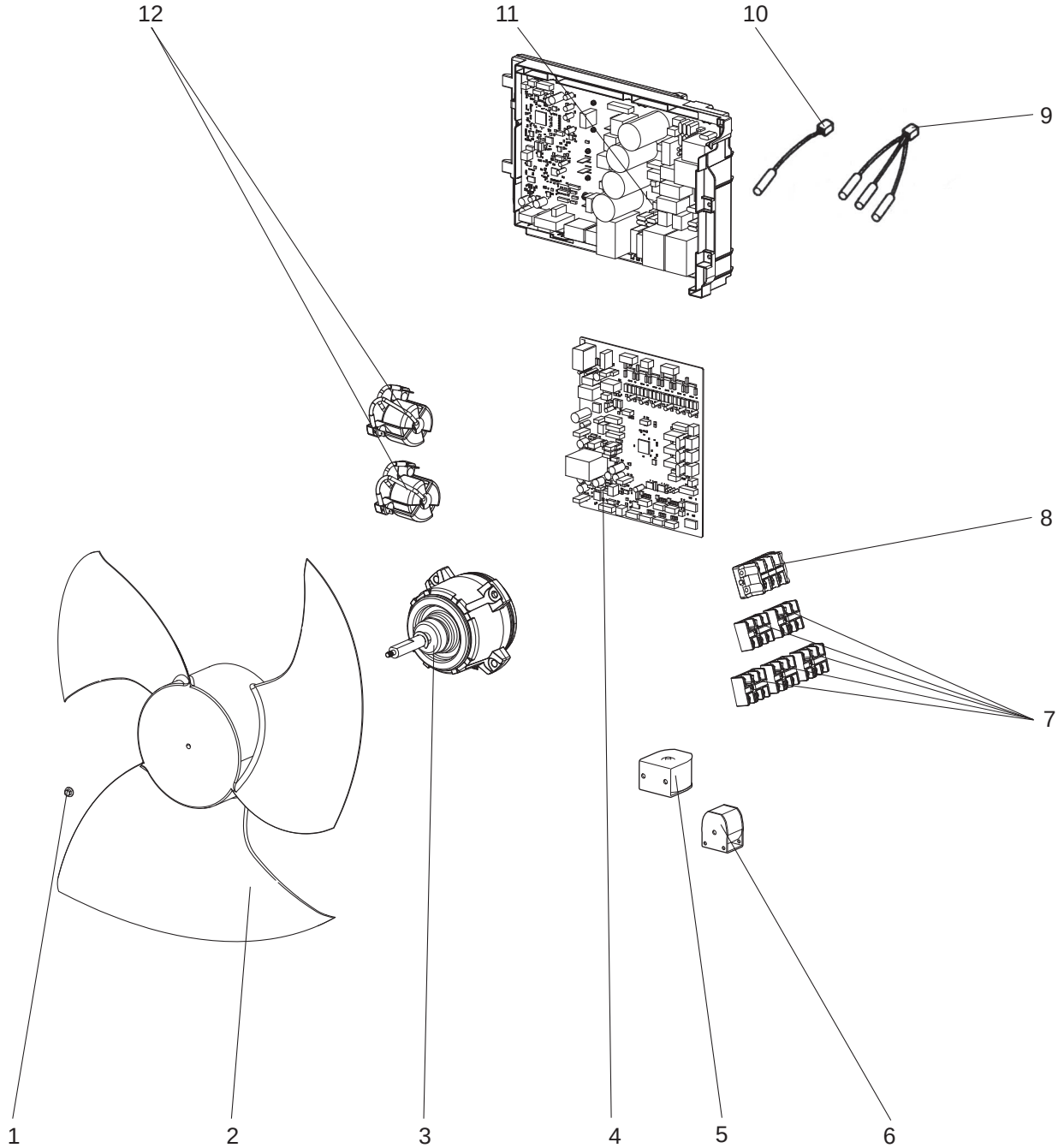

1-12. OUTDOOR UNIT FUNCTIONAL PARTS AND ELECTRICAL PARTS

1. The part quantity below indicates the required number of pieces per unit.

No.	Part No.	Part Name	MXZ-5C42NA	Symbol in Wiring Diagram	Remarks
1	E27 A15 508	PROPELLER FAN NUT	1		
2	E22 N99 501	PROPELLER FAN	1		
3	E22 R55 301	OUTDOOR FAN MOTOR	1	MF	
4	E22 92H 450	OUTDOOR CONTROL P.C. BOARD	1		
5	E22 P01 490	2-WAY VALVE SOLENOID COIL	1	21S2	
6	E22 N99 490	R.V. COIL	1	21S4	
7	E22 C92 375	TERMINAL BLOCK	5	TB2, 3, 4, 5, 6	Indoor unit connecting
8	E22 N99 374	TERMINAL BLOCK	1	TB1	Power supply
9	E22 N99 308	THERMISTOR SET	1	RT61, RT62, RT68	DEFROST, DISCHARGE, OUTDOOR HEAT EXCHANGER
10	E22 N99 309	AMBIENT TEMPERATURE THERMISTOR	1	RT65	
11	E22 N99 440	OUTDOOR POWER P.C. BOARD	1		Includes heat sink and RT64
12	E22 N99 337	REACTOR	2	L1, L2	

MXZ-5C42NA2 MXZ-5C42NA3
1-13. OUTDOOR UNIT STRUCTURAL PARTS AND FUNCTIONAL PARTS

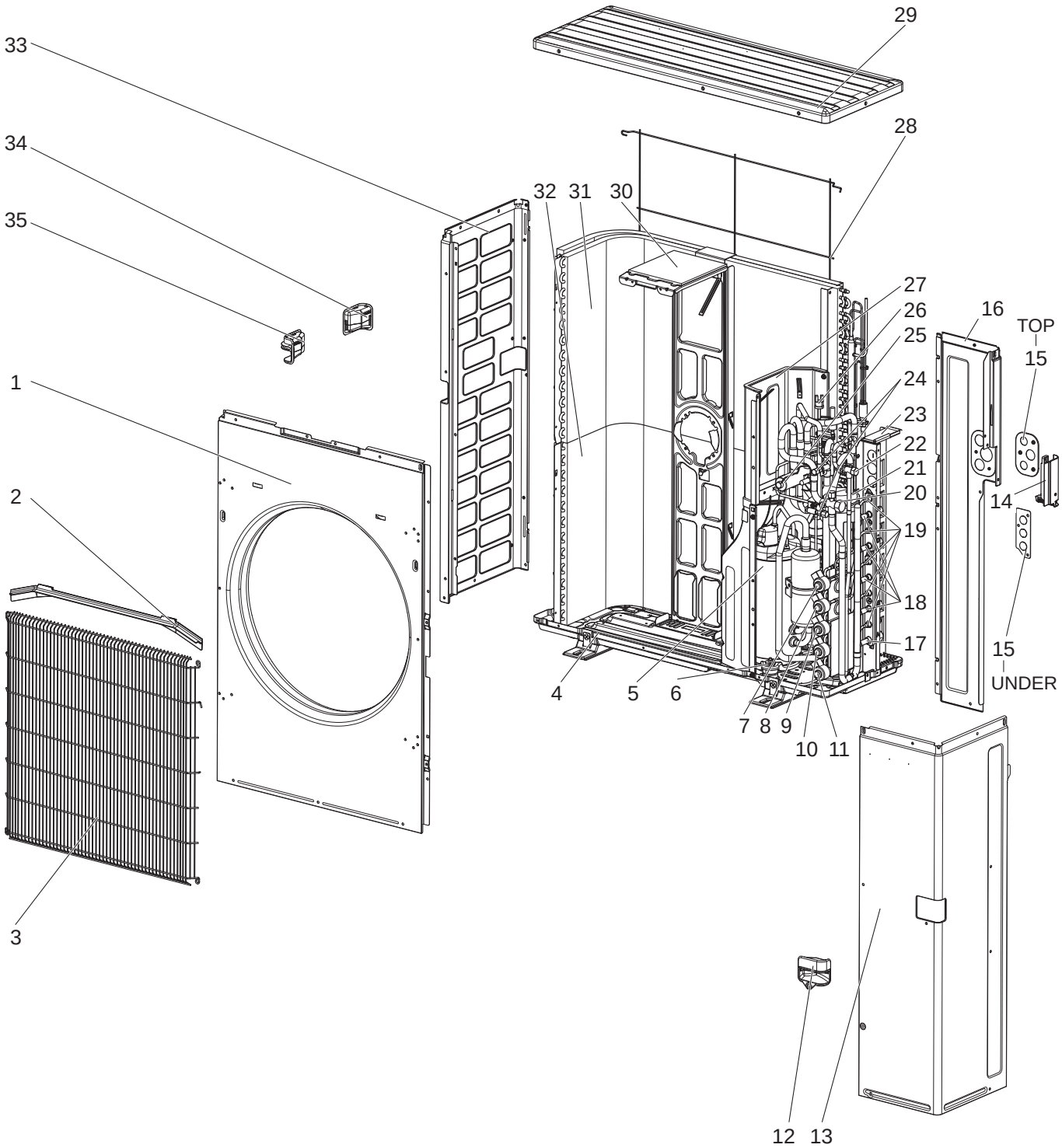

1-13. OUTDOOR UNIT STRUCTURAL PARTS AND FUNCTIONAL PARTS

1. The part quantity below indicates the required number of pieces per unit.
2. The circled No. indicates that the part is not shown in the figure.

No.	Part No.	Part Name	MXZ-5C42NA2-U1	MXZ-5C42NA3-U1	Symbol in Wiring Diagram	Remarks
1	E22 N99 232	FRONT PANEL	1	1		
2	E27 A15 531	ICE GUARD	1	1		
3	E27 942 521	GRILLE	1	1		
4	E22 N99 290	BASE ASSEMBLY	1	1		
5	E22 N99 900	COMPRESSOR	1	1	MC	MNB33FBTMC-L
6	E22 267 506	COMPRESSOR RUBBER SET	3	3		3 RUBBERS SET
7	E22 N99 640	EXPANSION VALVE	1	1		E room
7	E22 P64 493	LEV COIL	1	1	LEV E	E room, Connector: BLACK
8	E22 N99 640	EXPANSION VALVE	1	1		D room
8	E22 P63 493	LEV COIL	1	1	LEV D	D room, Connector: YELLOW
9	E22 N99 640	EXPANSION VALVE	1	1		C room
9	E22 P02 493	LEV COIL	1	1	LEV C	C room, Connector: BLUE
10	E22 N99 640	EXPANSION VALVE	1	1		B room
10	E22 P01 493	LEV COIL	1	1	LEV B	B room, Connector: RED
11	E22 N99 640	EXPANSION VALVE	1	1		A room
11	E22 N99 493	LEV COIL	1	1	LEV A	A room, Connector: WHITE
12	E22 P01 009	HANDLE	1	1		
13	E22 N99 245	SERVICE PANEL	1			Without LABEL
13	E22 09T 245	SERVICE PANEL		1		Without LABEL
14	E22 N99 009	HANDLE (BACK)	1	1		
15	E22 N99 978	CONDUIT PLATE (TOP)	1	1		
15	E22 P01 978	CONDUIT PLATE (UNDER)	1	1		
16	E22 N99 233	BACK PANEL	1	1		
17	E22 D37 666	UNION (GAS) (ø12.7)	1	1		ø1/2, A room
18	E22 D36 666	UNION (GAS) (ø9.52)	4	4		ø3/8, B, C, D, E room
19	E22 D36 667	UNION (LIQUID) (ø6.35)	5	5		ø1/4, A, B, C, D, E room
20	E22 N99 661	STOP VALVE (GAS) (ø15.88)	1	1		ø5/8
21	E22 N99 932	ACCUMULATOR	1	1		
22	E22 N99 662	STOP VALVE (LIQUID) (ø9.52)	1	1		ø3/8
23	E22 P64 814	BACK PILLAR	1	1		
24	E22 N99 641	SERVICE PORT	2	2		
25	E22 N99 961	4-WAY VALVE	1			
25	E22 24R 961	4-WAY VALVE		1		
26	E22 W66 646	HIGH PRESSURE SWITCH	1	1	HPS	4.41 MPa (45.0 kg/cm^2)
27	E22 N99 293	SEPARATOR	1	1		
28	E22 N99 523	REAR GUARD	1	1		
29	E22 N99 297	TOP PANEL	1			
29	E22 09T 297	TOP PANEL		1		
30	E22 P64 515	MOTOR SUPPORT	1	1		
31	E22 N99 630	OUTDOOR HEAT EXCHANGER (TOP)	1	1		Includes capillary tubes
32	E22 P01 630	OUTDOOR HEAT EXCHANGER (UNDER)	1	1		Includes capillary tubes
33	E22 N99 086	SIDE PANEL-L	1	1		
34	E27 943 009	HANDLE (REAR)	1	1		
35	E27 942 009	HANDLE (FRONT)	1	1		
36	E22 N99 492	2-WAY SOLENOID VALVE	1	1		
37	E22 N99 936	CAPILLARY TUBE (ø4.0 x ø3.0 x 200)	2			O.D. 0.16 x I.D. 0.12 x 7.88
38	E22 939 936	CAPILLARY TUBE (ø4.0 x ø2.8 x 100)	5	5		O.D. 0.16 x I.D. 0.11 x 3.94
39	E22 820 936	CAPILLARY TUBE (ø2.5 x ø0.6 x 1000)	1	1		O.D. 0.10 x I.D. 0.02 x 39.37

MXZ-5C42NA2 MXZ-5C42NA3
1-14. OUTDOOR UNIT FUNCTIONAL PARTS AND ELECTRICAL PARTS

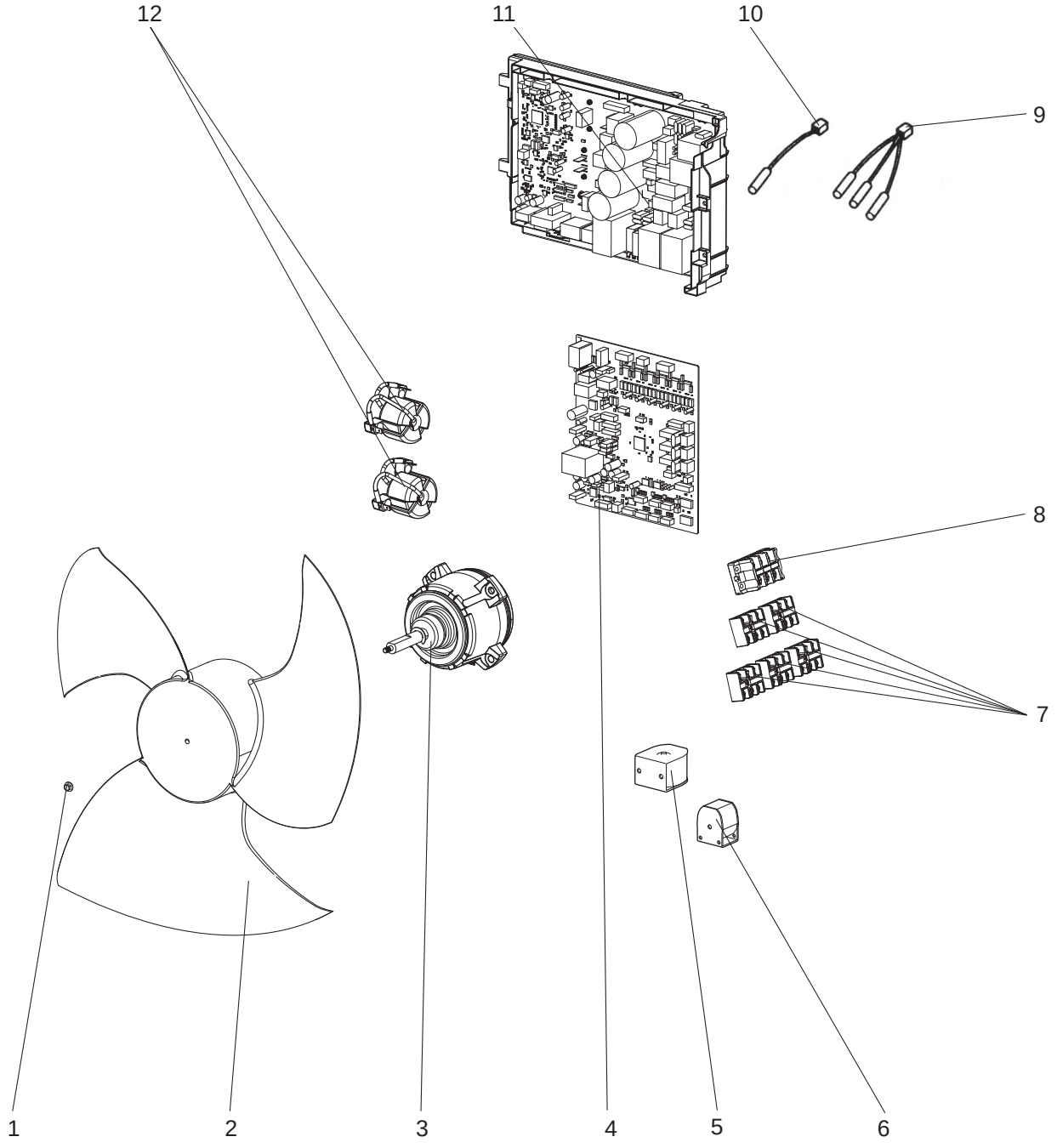

1-14. OUTDOOR UNIT FUNCTIONAL PARTS AND ELECTRICAL PARTS

1. The part quantity below indicates the required number of pieces per unit.

No.	Part No.	Part Name	MXZ-5C42NA2-U1	MXZ-5C42NA3-U1	Symbol in Wiring Diagram	Remarks
1	E27 A15 508	PROPELLER FAN NUT	1	1		
2	E22 N99 501	PROPELLER FAN	1	1		
3	E22 W69 301	OUTDOOR FAN MOTOR	1	1	MF	
4	E22 02F 450	OUTDOOR CONTROL P.C. BOARD	1			
4	E22 13X 450	OUTDOOR CONTROL P.C. BOARD		1		
5	E22 P01 490	2-WAY VALVE SOLENOID COIL	1	1	21S2	
6	E22 N99 490	R.V. COIL	1	1	21S4	
7	E22 C92 375	TERMINAL BLOCK	5	5	TB2, 3, 4, 5, 6	Indoor unit connecting
8	E22 N99 374	TERMINAL BLOCK	1	1	TB1	Power supply
9	E22 N99 308	THERMISTOR SET	1		RT61, RT62, RT68	DEFROST, DISCHARGE, OUTDOOR HEAT EXCHANGER
9	E27 Y96 308	THERMISTOR SET		1	RT61, RT62, RT68	DEFROST, DISCHARGE, OUTDOOR HEAT EXCHANGER
10	E22 N99 309	AMBIENT TEMPERATURE THERMISTOR	1	1	RT65	
11	E22 R55 440	OUTDOOR POWER P.C. BOARD	1			Includes heat sink and RT64
11	E22 18B 440	OUTDOOR POWER P.C. BOARD		1		Includes heat sink and RT64
12	E22 N99 337	REACTOR	2		L1, L2	
12	E22 96E 337	REACTOR		2	L1, L2	

MXZ-5C42NA4
1-15. OUTDOOR UNIT STRUCTURAL PARTS AND FUNCTIONAL PARTS

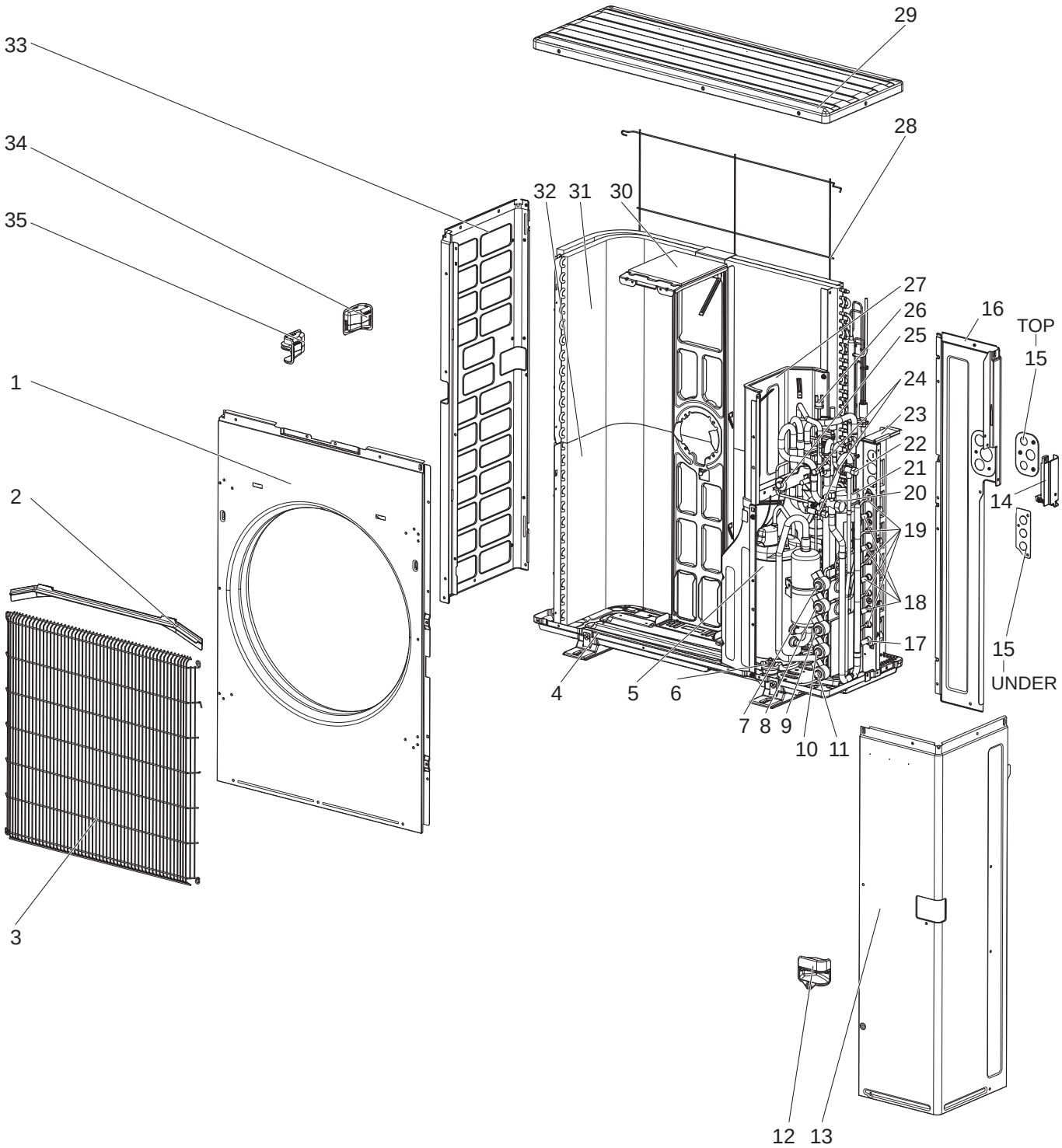

1-15. OUTDOOR UNIT STRUCTURAL PARTS AND FUNCTIONAL PARTS

1. The part quantity below indicates the required number of pieces per unit.
2. The circled No. indicates that the part is not shown in the figure.

No.	Part No.	Part Name	MXZ-5C42NA4-U1	Symbol in Wiring Diagram	Remarks
1	E22 N99 232	FRONT PANEL	1		
2	E27 A15 531	ICE GUARD	1		
3	E27 942 521	GRILLE	1		
4	E22 N99 290	BASE ASSEMBLY	1		
5	E22 N99 900	COMPRESSOR	1	MC	MNB33FBTMC-L
6	E22 267 506	COMPRESSOR RUBBER SET	3		3 RUBBERS SET
7	E22 71W 640	EXPANSION VALVE	1		E room
7	E27 09A 493	LEV COIL	1	LEV E	E room, Connector: BLACK
8	E22 71W 640	EXPANSION VALVE	1		D room
8	E27 Y99 493	LEV COIL	1	LEV D	D room, Connector: YELLOW
9	E22 71W 640	EXPANSION VALVE	1		C room
9	E27 Y98 493	LEV COIL	1	LEV C	C room, Connector: BLUE
10	E22 71W 640	EXPANSION VALVE	1		B room
10	E27 Y97 493	LEV COIL	1	LEV B	B room, Connector: RED
11	E22 71W 640	EXPANSION VALVE	1		A room
11	E27 Y96 493	LEV COIL	1	LEV A	A room, Connector: WHITE
12	E22 P01 009	HANDLE	1		
13	E22 09T 245	SERVICE PANEL	1		Without LABEL
14	E22 N99 009	HANDLE (BACK)	1		
15	E22 N99 978	CONDUIT PLATE (TOP)	1		
15	E22 P01 978	CONDUIT PLATE (UNDER)	1		
16	E22 N99 233	BACK PANEL	1		Includes CONDUIT PLATE (TOP)
17	E22 D37 666	UNION (GAS) (ø12.7)	1		ø1/2, A room
18	E22 D36 666	UNION (GAS) (ø9.52)	4		ø3/8, B, C, D, E room
19	E22 D36 667	UNION (LIQUID) (ø6.35)	5		ø1/4, A, B, C, D, E room
20	E22 N99 661	STOP VALVE (GAS) (ø15.88)	1		ø5/8
21	E22 N99 932	ACCUMULATOR	1		
22	E22 73W 662	STOP VALVE (LIQUID) (ø9.52)	1		ø3/8
23	E22 P64 814	BACK PILLAR	1		
24	E22 N99 641	SERVICE PORT	2		
25	E22 24R 961	4-WAY VALVE	1		
26	E22 71W 646	HIGH PRESSURE SWITCH	1	HPS	4.14 MPa (42.2 kg/cm^2)
27	E22 N99 293	SEPARATOR	1		
28	E22 N99 523	REAR GUARD	1		
29	E22 09T 297	TOP PANEL	1		
30	E22 P64 515	MOTOR SUPPORT	1		
31	E22 73W 630	OUTDOOR HEAT EXCHANGER (TOP)	1		Includes capillary tubes
32	E22 74W 630	OUTDOOR HEAT EXCHANGER (UNDER)	1		Includes capillary tubes
33	E22 N99 086	SIDE PANEL (L)	1		
34	E27 943 009	HANDLE (REAR)	1		
35	E27 942 009	HANDLE (FRONT)	1		
36	E22 N99 492	2-WAY SOLENOID VALVE	1		
37	E22 73W 936	CAPILLARY TUBE (ø4.0 x ø2.8 x 100)	5		O.D. 0.16 x I.D. 0.11 x 3.94
38	E22 13H 936	CAPILLARY TUBE (ø2.5 x ø0.6 x 1000)	1		O.D. 0.10 x I.D. 0.02 x 39.37

MXZ-5C42NA4
1-16. OUTDOOR UNIT FUNCTIONAL PARTS AND ELECTRICAL PARTS

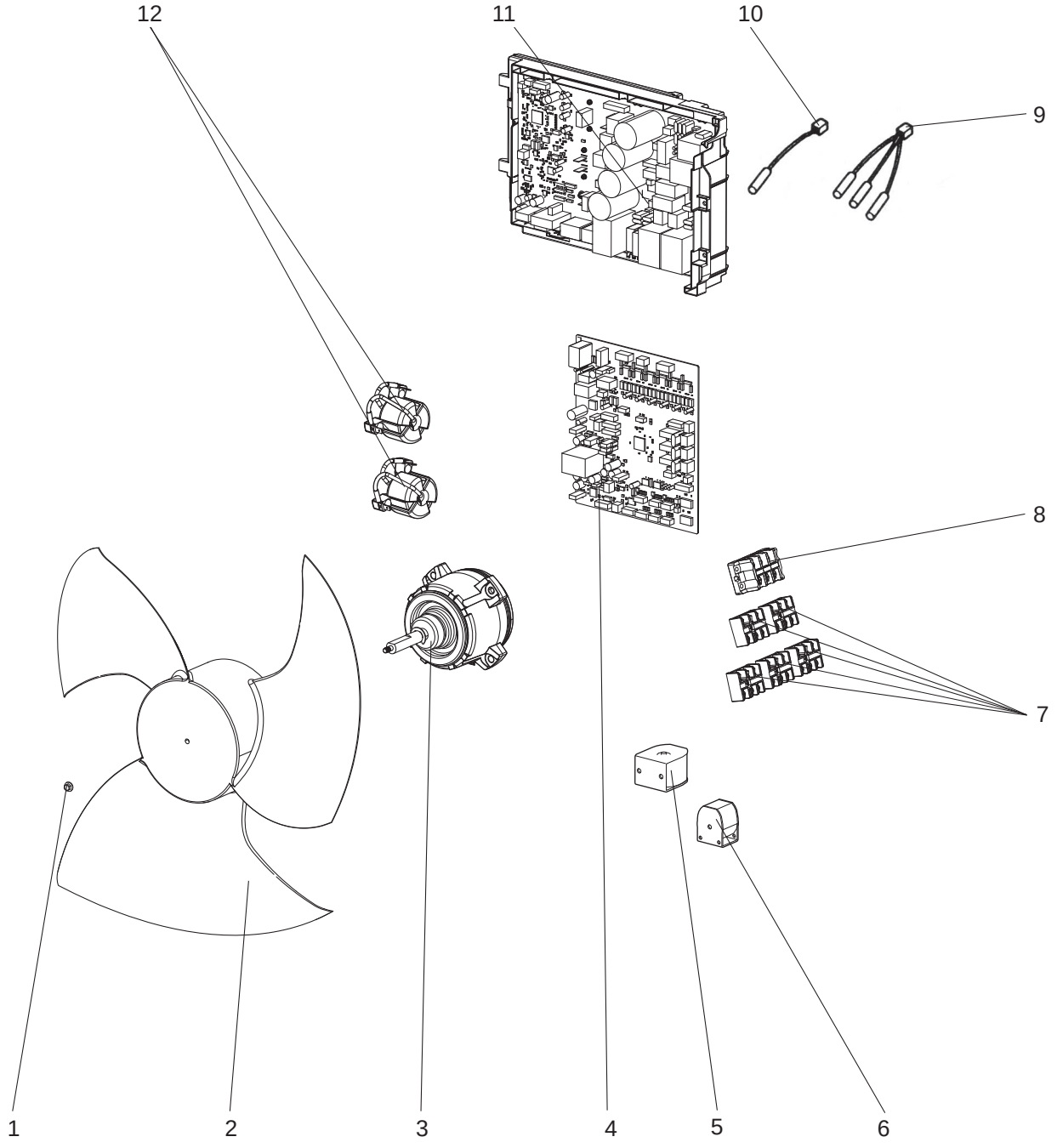

1-16. OUTDOOR UNIT FUNCTIONAL PARTS AND ELECTRICAL PARTS

1. The part quantity below indicates the required number of pieces per unit.

No.	Part No.	Part Name	MXZ-5C42NA4-U1	Symbol in Wiring Diagram	Remarks
1	E27 A15 508	PROPELLER FAN NUT	1		
2	E22 N99 501	PROPELLER FAN	1		
3	E22 W69 301	OUTDOOR FAN MOTOR	1	MF	
4	E22 76W 450	OUTDOOR CONTROL P.C. BOARD	1		
5	E22 P01 490	2-WAY VALVE SOLENOID COIL	1	21S2	
6	E22 N99 490	R.V. COIL	1	21S4	
7	E22 C92 375	TERMINAL BLOCK	5	TB2, 3, 4, 5, 6	Indoor unit connecting
8	E22 73W 374	TERMINAL BLOCK	1	TB1	Power supply
9	E27 Y96 308	THERMISTOR SET	1	RT61, RT62, RT68	DEFROST, DISCHARGE, OUTDOOR HEAT EXCHANGER
10	E22 N99 309	AMBIENT TEMPERATURE THERMISTOR	1	RT65	
11	E22 73W 440	OUTDOOR POWER P.C. BOARD	1		Includes heat sink and RT64
12	E22 96E 337	REACTOR	2	L1, L2	

MXZ-2C20NAHZ
1-17. OUTDOOR UNIT STRUCTURAL PARTS AND FUNCTIONAL PARTS

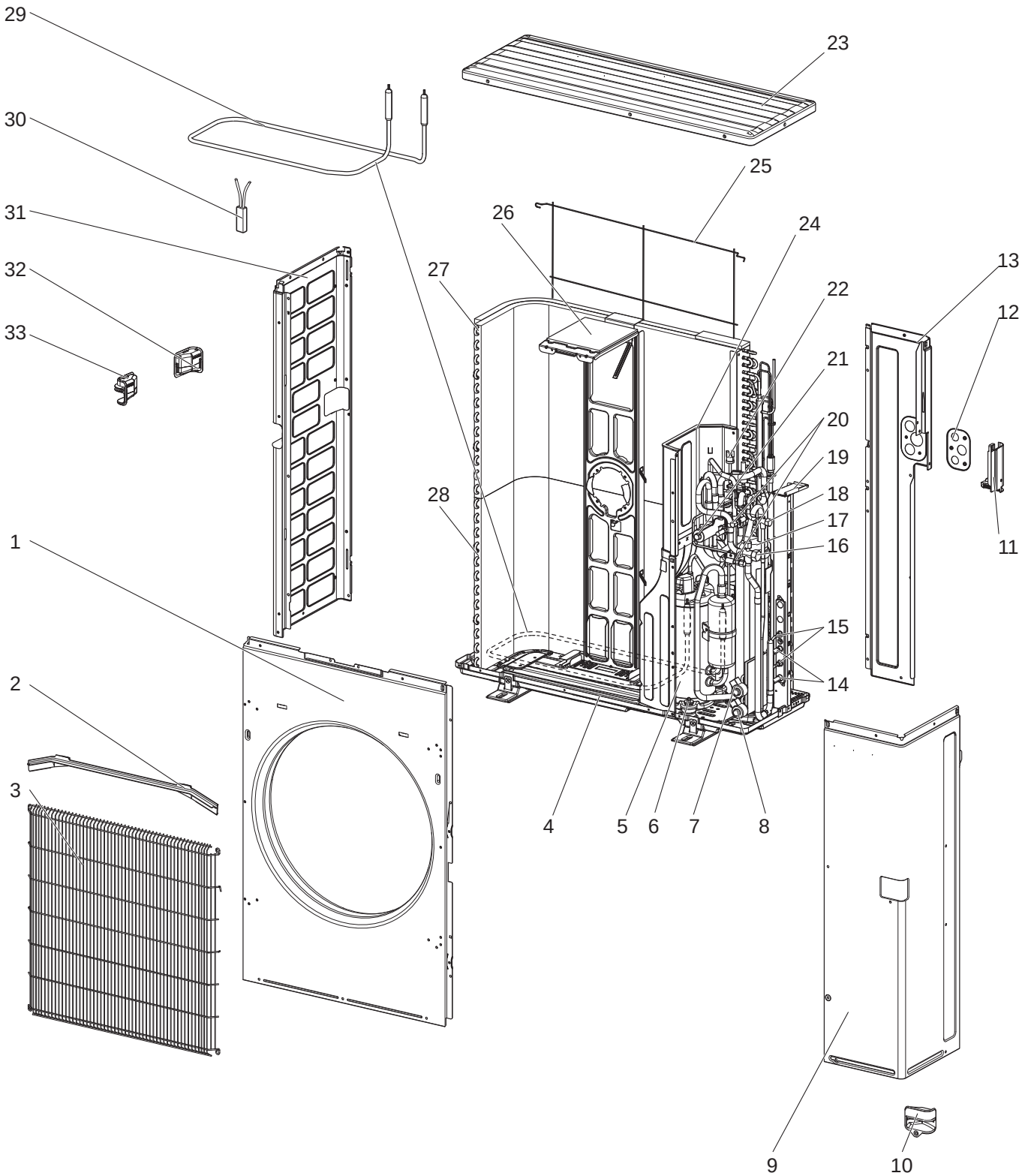

1-17. OUTDOOR UNIT STRUCTURAL PARTS AND FUNCTIONAL PARTS

1. The part quantity below indicates the required number of pieces per unit.
2. The circled No. indicates that the part is not shown in the figure.

No.	Part No.	Part Name	MXZ-2C20NAHZ	Symbol in Wiring Diagram	Remarks
1	E22 N99 232	FRONT PANEL	1		
2	E27 A15 531	ICE GUARD	1		
3	E27 942 521	GRILLE	1		
4	E22 N99 290	BASE ASSEMBLY	1		
5	E22 N99 900	COMPRESSOR	1	MC	MNB33FBTMC-L
6	E22 267 506	COMPRESSOR RUBBER SET	3		3 RUBBERS SET
7	E22 N99 640	EXPANSION VALVE	1		B room
7	E22 P01 493	LEV COIL	1	LEV B	B room
8	E22 N99 640	EXPANSION VALVE	1		A room
8	E22 N99 493	LEV COIL	1	LEV A	A room
9	E22 N99 245	SERVICE PANEL	1		
10	E22 P01 009	HANDLE	1		
11	E22 N99 009	HANDLE (BACK)	1		
12	E22 N99 978	CONDUIT PLATE	1		
13	E22 N99 233	BACK PANEL	1		
14	E22 D36 666	UNION (GAS) (ø9.52)	2		ø3/8, A, B room
15	E22 D36 667	UNION (LIQUID) (ø6.35)	2		ø1/4, A, B room
16	E22 N99 661	STOP VALVE (GAS) (ø15.88)	1		ø5/8
17	E22 N99 932	ACCUMULATOR	1		
18	E22 N99 662	STOP VALVE (LIQUID) (ø9.52)	1		ø3/8
19	E22 N99 814	BACK PILLAR	1		
20	E22 N99 641	SERVICE PORT	2		
21	E22 N99 961	4-WAY VALVE	1		
22	E22 853 646	HIGH PRESSURE SWITCH	1	HPS	4.8 MPa (48.9 kg/cm^2)
23	E22 N99 297	TOP PANEL	1		
24	E22 N99 293	SEPARATOR	1		
25	E22 N99 523	REAR GUARD	1		
26	E22 N99 515	MOTOR SUPPORT	1		
27	E22 N99 630	OUTDOOR HEAT EXCHANGER (TOP)	1		Includes capillary tubes
28	E22 P01 630	OUTDOOR HEAT EXCHANGER (UNDER)	1		Includes capillary tubes
29	E22 N99 526	DEFROST HEATER	1	H	
30	E22 N99 381	HEATER PROTECTOR	1	26H	
31	E22 N99 086	SIDE PANEL (L)	1		
32	E27 943 009	HANDLE (REAR)	1		
33	E27 942 009	HANDLE (FRONT)	1		
34	E22 N99 492	2-WAY SOLENOID VALVE	1		
35	E22 939 936	CAPILLARY TUBE (ø4.0 x ø2.8 x 100)	2		O.D. 0.16 x I.D. 0.11 x 3.94
36	E22 820 936	CAPILLARY TUBE (ø2.5 x ø0.6 x 1000)	1		O.D. 0.10 x I.D. 0.02 x 39.37

MXZ-2C20NAHZ
1-18. OUTDOOR UNIT FUNCTIONAL PARTS AND ELECTRICAL PARTS

1-18. OUTDOOR UNIT FUNCTIONAL PARTS AND ELECTRICAL PARTS

1. The part quantity below indicates the required number of pieces per unit.

No.	Part No.	Part Name	MXZ-2C20NAHZ	Symbol in Wiring Diagram	Remarks
1	E27 A15 508	PROPELLER FAN NUT	1		
2	E22 N99 501	PROPELLER FAN	1		
3	E22 R55 301	OUTDOOR FAN MOTOR	1	MF	
4	E22 89H 450	OUTDOOR CONTROL P.C. BOARD	1		
5	E22 P01 490	2-WAY VALVE SOLENOID COIL	1	21S2	
6	E22 N99 490	R.V. COIL	1	21S4	
7	E22 C92 375	TERMINAL BLOCK	2	TB2, 3	Indoor unit connecting
8	E22 N99 374	TERMINAL BLOCK	1	TB1	Power supply
9	E22 N99 308	THERMISTOR SET	1	RT61, RT62, RT68	DEFROST, DISCHARGE, OUTDOOR HEAT EXCHANGER
10	E22 N99 309	AMBIENT TEMPERATURE THERMISTOR	1	RT65	
11	E22 N99 440	OUTDOOR POWER P.C. BOARD	1		Includes heat sink and RT64
12	E22 N99 337	REACTOR	2	L1, L2	

MXZ-2C20NAHZ2 MXZ-2C20NAHZ3
1-19. OUTDOOR UNIT STRUCTURAL PARTS AND FUNCTIONAL PARTS

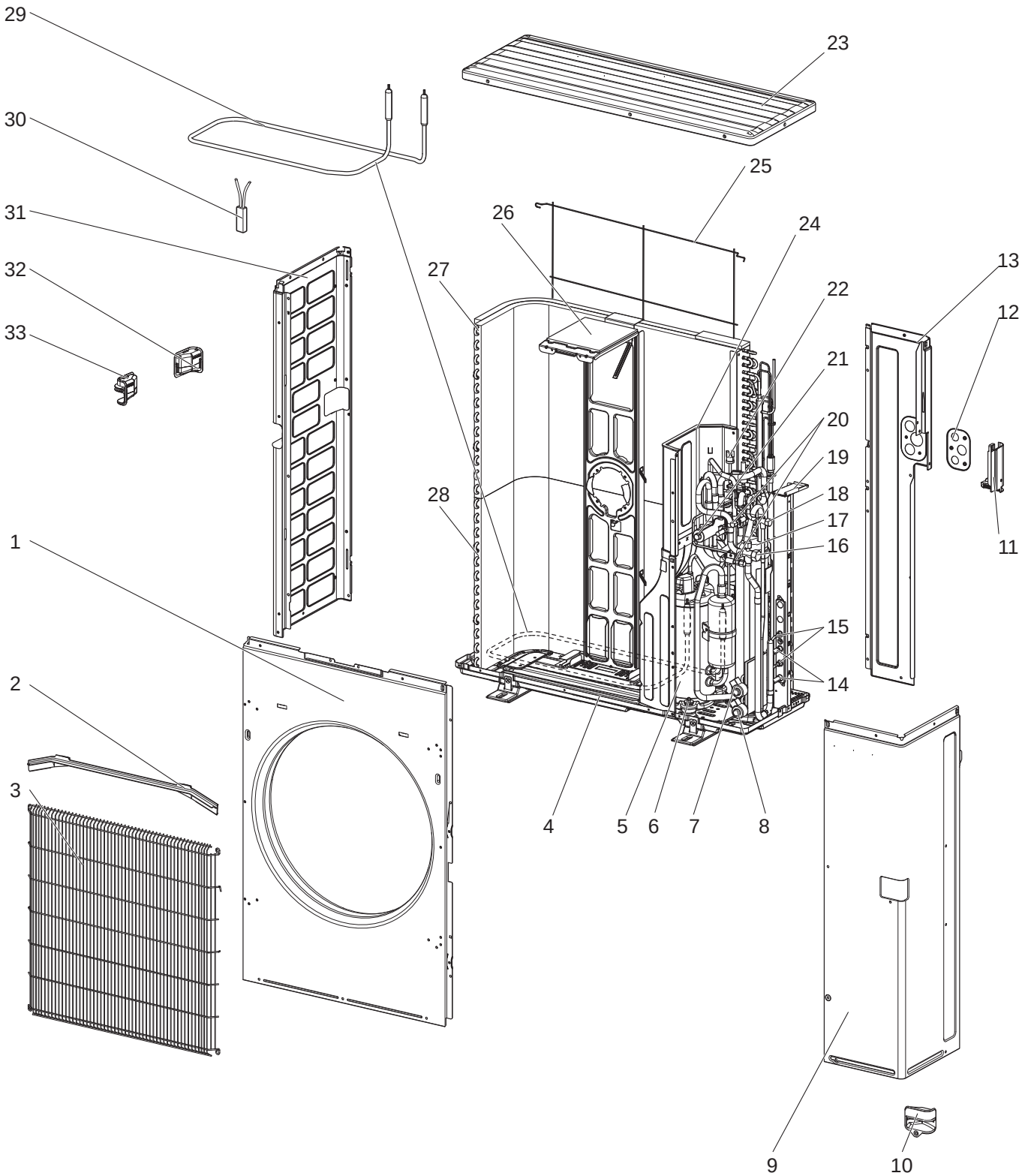

1-19. OUTDOOR UNIT STRUCTURAL PARTS AND FUNCTIONAL PARTS

1. The part quantity below indicates the required number of pieces per unit.
2. The circled No. indicates that the part is not shown in the figure.

No.	Part No.	Part Name	MXZ-2C20NAHZ2-U1	MXZ-2C20NAHZ3-U1	Symbol in Wiring Diagram	Remarks
1	E22 N99 232	FRONT PANEL	1	1		
2	E27 A15 531	ICE GUARD	1	1		
3	E27 942 521	GRILLE	1	1		
4	E22 N99 290	BASE ASSEMBLY	1	1		
5	E22 N99 900	COMPRESSOR	1	1	MC	MNB33FBTMC-L
6	E22 267 506	COMPRESSOR RUBBER SET	3	3		3 RUBBERS SET
7	E22 N99 640	EXPANSION VALVE	1	1		B room
7	E22 P01 493	LEV COIL	1	1	LEV B	B room, Connector: RED
8	E22 N99 640	EXPANSION VALVE	1	1		A room
8	E22 N99 493	LEV COIL	1	1	LEV A	A room, Connector: WHITE
9	E22 N99 245	SERVICE PANEL	1			
9	E22 09T 245	SERVICE PANEL		1		
10	E22 P01 009	HANDLE	1	1		
11	E22 N99 009	HANDLE (BACK)	1	1		
12	E22 N99 978	CONDUIT PLATE	1	1		
13	E22 N99 233	BACK PANEL	1	1		
14	E22 D36 666	UNION (GAS) (ø9.52)	2	2		ø3/8, A, B room
15	E22 D36 667	UNION (LIQUID) (ø6.35)	2	2		ø1/4, A, B room
16	E22 N99 661	STOP VALVE (GAS) (ø15.88)	1	1		ø5/8
17	E22 N99 932	ACCUMULATOR	1	1		
18	E22 N99 662	STOP VALVE (LIQUID) (ø9.52)	1	1		ø3/8
19	E22 N99 814	BACK PILLAR	1	1		
20	E22 N99 641	SERVICE PORT	2	2		
21	E22 N99 961	4-WAY VALVE	1			
21	E22 24R 961	4-WAY VALVE		1		
22	E22 W66 646	HIGH PRESSURE SWITCH	1	1	HPS	4.41 MPa (45.0 kg/cm^2)
23	E22 N99 297	TOP PANEL	1			
23	E22 09T 297	TOP PANEL		1		
24	E22 N99 293	SEPARATOR	1	1		
25	E22 N99 523	REAR GUARD	1	1		
26	E22 N99 515	MOTOR SUPPORT	1	1		
27	E22 N99 630	OUTDOOR HEAT EXCHANGER (TOP)	1	1		Includes capillary tubes
28	E22 P01 630	OUTDOOR HEAT EXCHANGER (UNDER)	1	1		Includes capillary tubes
29	E22 N99 526	DEFROST HEATER	1		H	BH70N837H01
29	E22 96E 526	DEFROST HEATER		1	H	BH70N837H02
30	E22 N99 381	HEATER PROTECTOR	1	1	26H	
31	E22 N99 086	SIDE PANEL (L)	1	1		
32	E27 943 009	HANDLE (REAR)	1	1		
33	E27 942 009	HANDLE (FRONT)	1	1		
34	E22 N99 492	2-WAY SOLENOID VALVE	1	1		
35	E22 939 936	CAPILLARY TUBE (ø4.0 x ø2.8 x 100)	2	2		O.D. 0.16 x I.D. 0.11 x 3.94
36	E22 820 936	CAPILLARY TUBE (ø2.5 x ø0.6 x 1000)	1	1		O.D. 0.10 x I.D. 0.02 x 39.37

MXZ-2C20NAHZ2 MXZ-2C20NAHZ3
1-20. OUTDOOR UNIT FUNCTIONAL PARTS AND ELECTRICAL PARTS

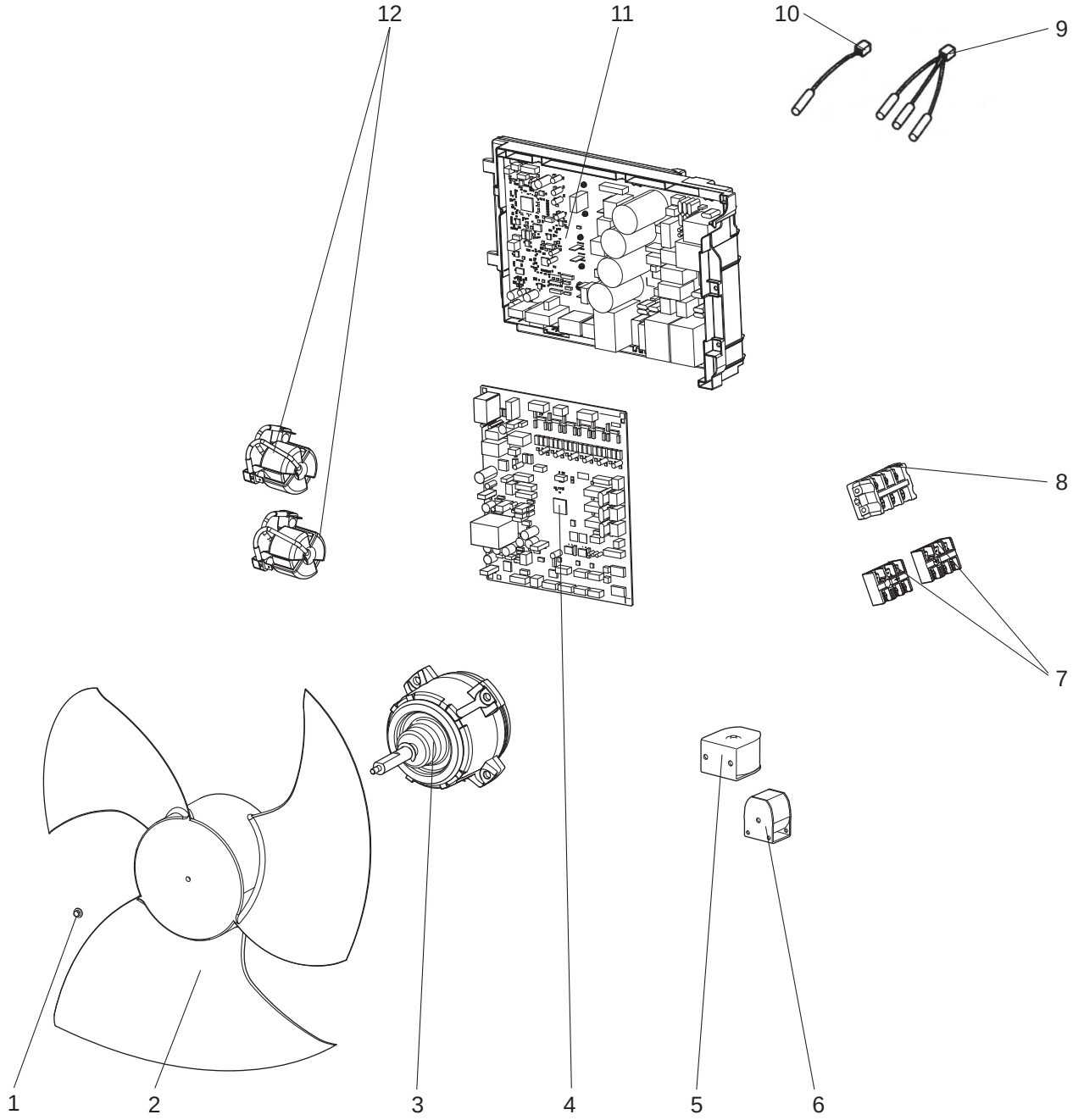

1-20. OUTDOOR UNIT FUNCTIONAL PARTS AND ELECTRICAL PARTS

1. The part quantity below indicates the required number of pieces per unit.

No.	Part No.	Part Name	MXZ-2C20NAHZ2-U1	MXZ-2C20NAHZ3-U1	Symbol in Wiring Diagram	Remarks
1	E27 A15 508	PROPELLER FAN NUT	1	1		
2	E22 N99 501	PROPELLER FAN	1	1		
3	E22 W69 301	OUTDOOR FAN MOTOR	1	1	MF	
4	E22 96E 450	OUTDOOR CONTROL P.C. BOARD	1			
4	E22 10X 450	OUTDOOR CONTROL P.C. BOARD		1		
5	E22 P01 490	2-WAY VALVE SOLENOID COIL	1	1	21S2	
6	E22 N99 490	R.V. COIL	1	1	21S4	
7	E22 C92 375	TERMINAL BLOCK	2	2	TB2, 3	Indoor unit connecting
8	E22 N99 374	TERMINAL BLOCK	1	1	TB1	Power supply
9	E22 N99 308	THERMISTOR SET	1		RT61, RT62, RT68	DEFROST, DISCHARGE, OUTDOOR HEAT EXCHANGER
9	E27 Y96 308	THERMISTOR SET		1	RT61, RT62, RT68	DEFROST, DISCHARGE, OUTDOOR HEAT EXCHANGER
10	E22 N99 309	AMBIENT TEMPERATURE THERMISTOR	1	1	RT65	
11	E22 R55 440	OUTDOOR POWER P.C. BOARD	1			Includes heat sink and RT64
11	E22 18B 440	OUTDOOR POWER P.C. BOARD		1		Includes heat sink and RT64
12	E22 N99 337	REACTOR	2		L1, L2	
12	E22 96E 337	REACTOR		2	L1, L2	

MXZ-2C20NAHZ4
1-21. OUTDOOR UNIT STRUCTURAL PARTS AND FUNCTIONAL PARTS

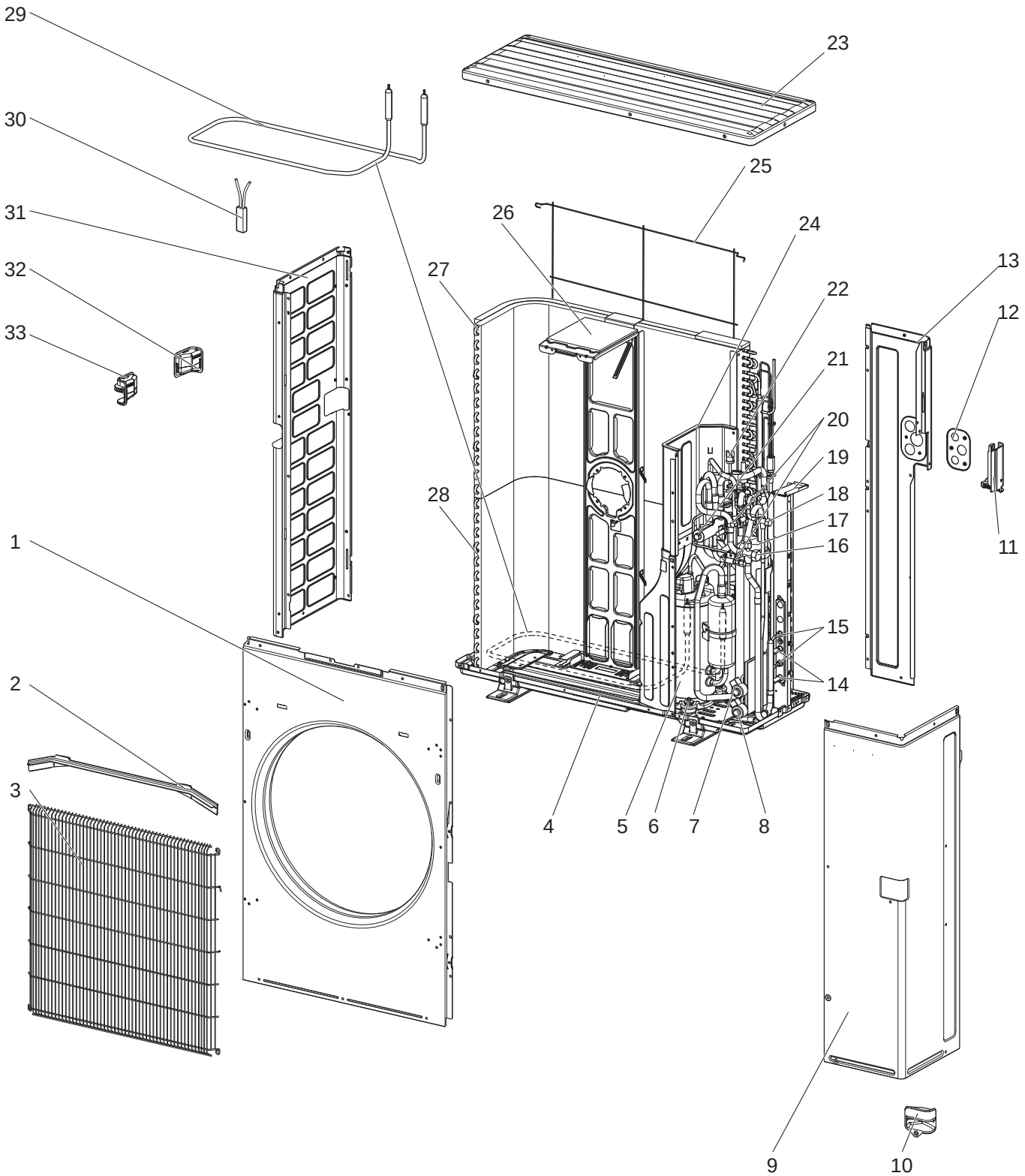

1-21. OUTDOOR UNIT STRUCTURAL PARTS AND FUNCTIONAL PARTS

1. The part quantity below indicates the required number of pieces per unit.
2. The circled No. indicates that the part is not shown in the figure.

No.	Part No.	Part Name	MXZ-2C20NAHZ4-U1	Symbol in Wiring Diagram	Remarks
1	E22 N99 232	FRONT PANEL	1		
2	E27 A15 531	ICE GUARD	1		
3	E27 942 521	GRILLE	1		
4	E22 N99 290	BASE ASSEMBLY	1		
5	E22 N99 900	COMPRESSOR	1	MC	MNB33FBTMC-L
6	E22 267 506	COMPRESSOR RUBBER SET	3		3 RUBBERS SET
7	E22 71W 640	EXPANSION VALVE	1		B room
7	E27 Y97 493	LEV COIL	1	LEV B	B room, Connector: RED
8	E22 71W 640	EXPANSION VALVE	1		A room
8	E27 Y96 493	LEV COIL	1	LEV A	A room, Connector: WHITE
9	E22 09T 245	SERVICE PANEL	1		
10	E22 P01 009	HANDLE	1		
11	E22 N99 009	HANDLE (BACK)	1		
12	E22 N99 978	CONDUIT PLATE	1		
13	E22 N99 233	BACK PANEL	1		Includes CONDUIT PLATE
14	E22 D36 666	UNION (GAS) (ø9.52)	2		ø3/8, A, B room
15	E22 D36 667	UNION (LIQUID) (ø6.35)	2		ø1/4, A, B room
16	E22 N99 661	STOP VALVE (GAS) (ø15.88)	1		ø5/8
17	E22 N99 932	ACCUMULATOR	1		
18	E22 73W 662	STOP VALVE (LIQUID) (ø9.52)	1		ø3/8
19	E22 N99 814	BACK PILLAR	1		
20	E22 N99 641	SERVICE PORT	2		
21	E22 24R 961	4-WAY VALVE	1		
22	E22 71W 646	HIGH PRESSURE SWITCH	1	HPS	4.14 MPa (42.2 kg/cm^2)
23	E22 09T 297	TOP PANEL	1		
24	E22 N99 293	SEPARATOR	1		
25	E22 N99 523	REAR GUARD	1		
26	E22 N99 515	MOTOR SUPPORT	1		
27	E22 73W 630	OUTDOOR HEAT EXCHANGER (TOP)	1		Includes capillary tubes
28	E22 74W 630	OUTDOOR HEAT EXCHANGER (UNDER)	1		Includes capillary tubes
29	E22 96E 526	DEFROST HEATER	1	H	BH70N837H02
30	E22 N99 381	HEATER PROTECTOR	1	26H	
31	E22 N99 086	SIDE PANEL (L)	1		
32	E27 943 009	HANDLE (REAR)	1		
33	E27 942 009	HANDLE (FRONT)	1		
34	E22 N99 492	2-WAY SOLENOID VALVE	1		
35	E22 73W 936	CAPILLARY TUBE (ø4.0 x ø2.8 x 100)	2		O.D. 0.16 x I.D. 0.11 x 3.94
36	E22 13H 936	CAPILLARY TUBE (ø2.5 x ø0.6 x 1000)	1		O.D. 0.10 x I.D. 0.02 x 39.37

MXZ-2C20NAHZ4
1-22. OUTDOOR UNIT FUNCTIONAL PARTS AND ELECTRICAL PARTS

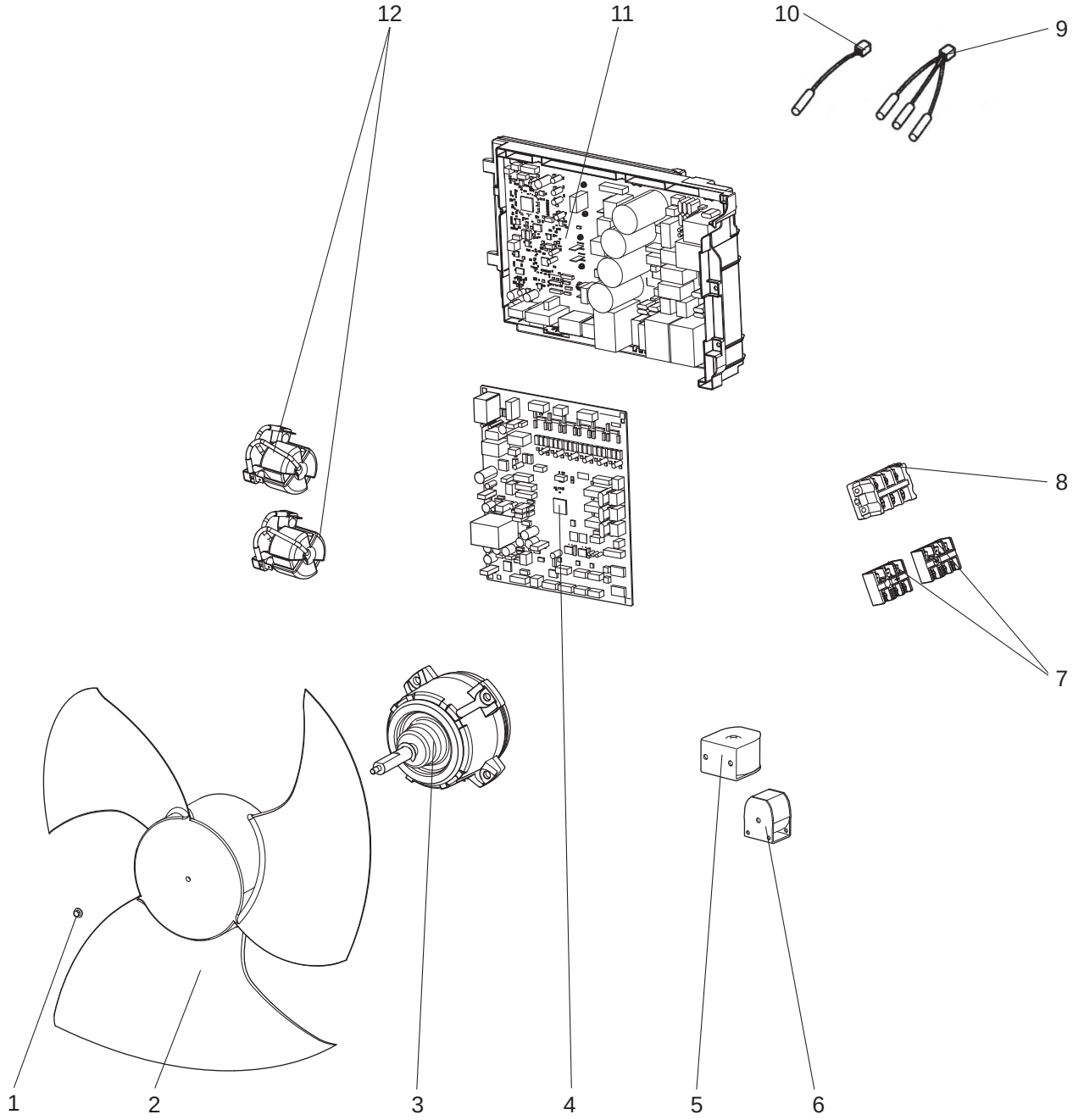

1-22. OUTDOOR UNIT FUNCTIONAL PARTS AND ELECTRICAL PARTS

1. The part quantity below indicates the required number of pieces per unit.

No.	Part No.	Part Name	MXZ-2C20NAHZ4-U1	Symbol in Wiring Diagram	Remarks
1	E27 A15 508	PROPELLER FAN NUT	1		
2	E22 N99 501	PROPELLER FAN	1		
3	E22 W69 301	OUTDOOR FAN MOTOR	1	MF	
4	E22 73W 450	OUTDOOR CONTROL P.C. BOARD	1		
5	E22 P01 490	2-WAY VALVE SOLENOID COIL	1	21S2	
6	E22 N99 490	R.V. COIL	1	21S4	
7	E22 C92 375	TERMINAL BLOCK	2	TB2, 3	Indoor unit connecting
8	E22 73W 374	TERMINAL BLOCK	1	TB1	Power supply
9	E27 Y96 308	THERMISTOR SET	1	RT61, RT62, RT68	DEFROST, DISCHARGE, OUTDOOR HEAT EXCHANGER
10	E22 N99 309	AMBIENT TEMPERATURE THERMISTOR	1	RT65	
11	E22 73W 440	OUTDOOR POWER P.C. BOARD	1		Includes heat sink and RT64
12	E22 96E 337	REACTOR	2	L1, L2	

MXZ-3C24NAHZ MXZ-3C30NAHZ
1-23. OUTDOOR UNIT STRUCTURAL PARTS AND FUNCTIONAL PARTS

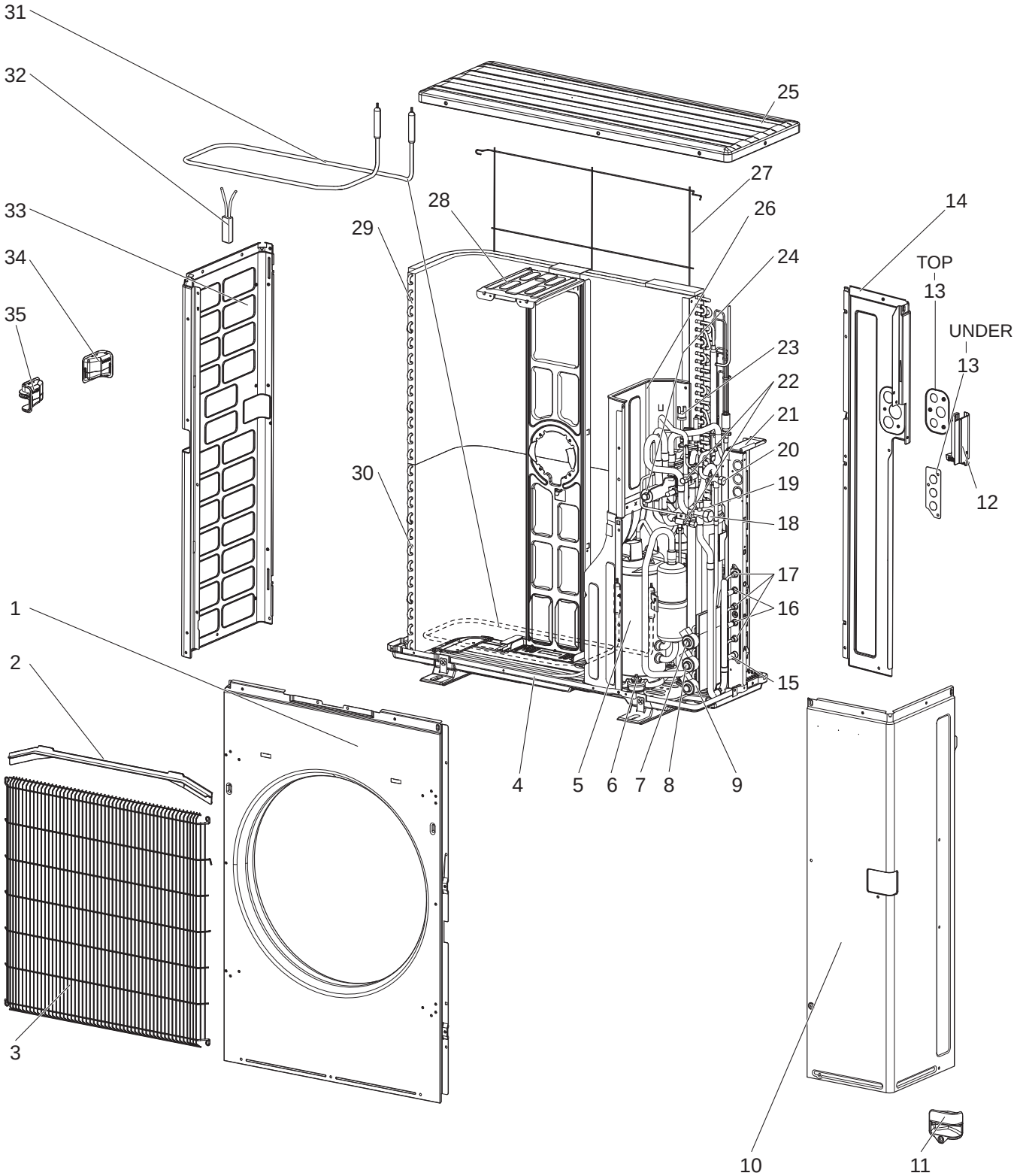

1-23. OUTDOOR UNIT STRUCTURAL PARTS AND FUNCTIONAL PARTS

1. The part quantity below indicates the required number of pieces per unit.
2. The circled No. indicates that the part is not shown in the figure.

No.	Part No.	Part Name	MXZ-3C24NAHZ	MXZ-3C30NAHZ	Symbol in Wiring Diagram	Remarks
1	E22 N99 232	FRONT PANEL	1	1		
2	E27 A15 531	ICE GUARD	1	1		
3	E27 942 521	GRILLE	1	1		
4	E22 N99 290	BASE ASSEMBLY	1	1		
5	E22 N99 900	COMPRESSOR	1	1	MC	MNB33FBTMC-L
6	E22 267 506	COMPRESSOR RUBBER SET	3	3		3 RUBBERS SET
7	E22 N99 640	EXPANSION VALVE	1	1		C room
7	E22 P02 493	LEV COIL	1	1	LEV C	C room
8	E22 N99 640	EXPANSION VALVE	1	1		B room
8	E22 P01 493	LEV COIL	1	1	LEV B	B room
9	E22 N99 640	EXPANSION VALVE	1	1		A room
9	E22 N99 493	LEV COIL	1	1	LEV A	A room
10	E22 N99 245	SERVICE PANEL	1	1		Without LABEL
11	E22 P01 009	HANDLE	1	1		
12	E22 N99 009	HANDLE (BACK)	1	1		
13	E22 N99 978	CONDUIT PLATE (TOP)	1	1		
13	E22 P01 978	CONDUIT PLATE (UNDER)	1	1		
14	E22 N99 233	BACK PANEL (OUT)	1	1		
15	E22 D37 666	UNION (GAS) (ø12.7)	1	1		ø1/2, A room
16	E22 D36 666	UNION (GAS) (ø9.52)	2	2		ø3/8, B, C room
17	E22 D36 667	UNION (LIQUID) (ø6.35)	3	3		ø1/4, A, B, C room
18	E22 N99 661	STOP VALVE (GAS) (ø15.88)	1	1		ø5/8
19	E22 N99 932	ACCUMULATOR	1	1		
20	E22 N99 662	STOP VALVE (LIQUID) (ø9.52)	1	1		ø3/8
21	E22 P01 814	BACK PILLAR	1	1		
22	E22 N99 641	SERVICE PORT	2	2		
23	E22 853 646	HIGH PRESSURE SWITCH	1	1	HPS	4.8 MPa (48.9 kg/cm^2)
24	E22 N99 961	4-WAY VALVE	1	1		
25	E22 N99 297	TOP PANEL	1	1		Without LABEL
26	E22 N99 293	SEPARATOR	1	1		
27	E22 N99 523	REAR GUARD	1	1		
28	E22 N99 515	MOTOR SUPPORT	1	1		
29	E22 N99 630	OUTDOOR HEAT EXCHANGER (TOP)	1	1		Includes capillary tubes
30	E22 P01 630	OUTDOOR HEAT EXCHANGER (UNDER)	1	1		Includes capillary tubes
31	E22 N99 526	DEFROST HEATER	1	1	H	
32	E22 N99 381	HEATER PROTECTOR	1	1	26H	
33	E22 N99 086	SIDE PANEL (L)	1	1		
34	E27 943 009	HANDLE (REAR)	1	1		
35	E27 942 009	HANDLE (FRONT)	1	1		
36	E22 N99 492	2-WAY SOLENOID VALVE	1	1		
37	E22 939 936	CAPILLARY TUBE (ø4.0 x ø2.8 x 100)	3	3		O.D. 0.16 x I.D. 0.11 x 3.94
38	E22 820 936	CAPILLARY TUBE (ø2.5 x ø0.6 x 1000)	1	1		O.D. 0.10 x I.D. 0.02 x 39.37

MXZ-3C24NAHZ MXZ-3C30NAHZ
1-24. OUTDOOR UNIT FUNCTIONAL PARTS AND ELECTRICAL PARTS

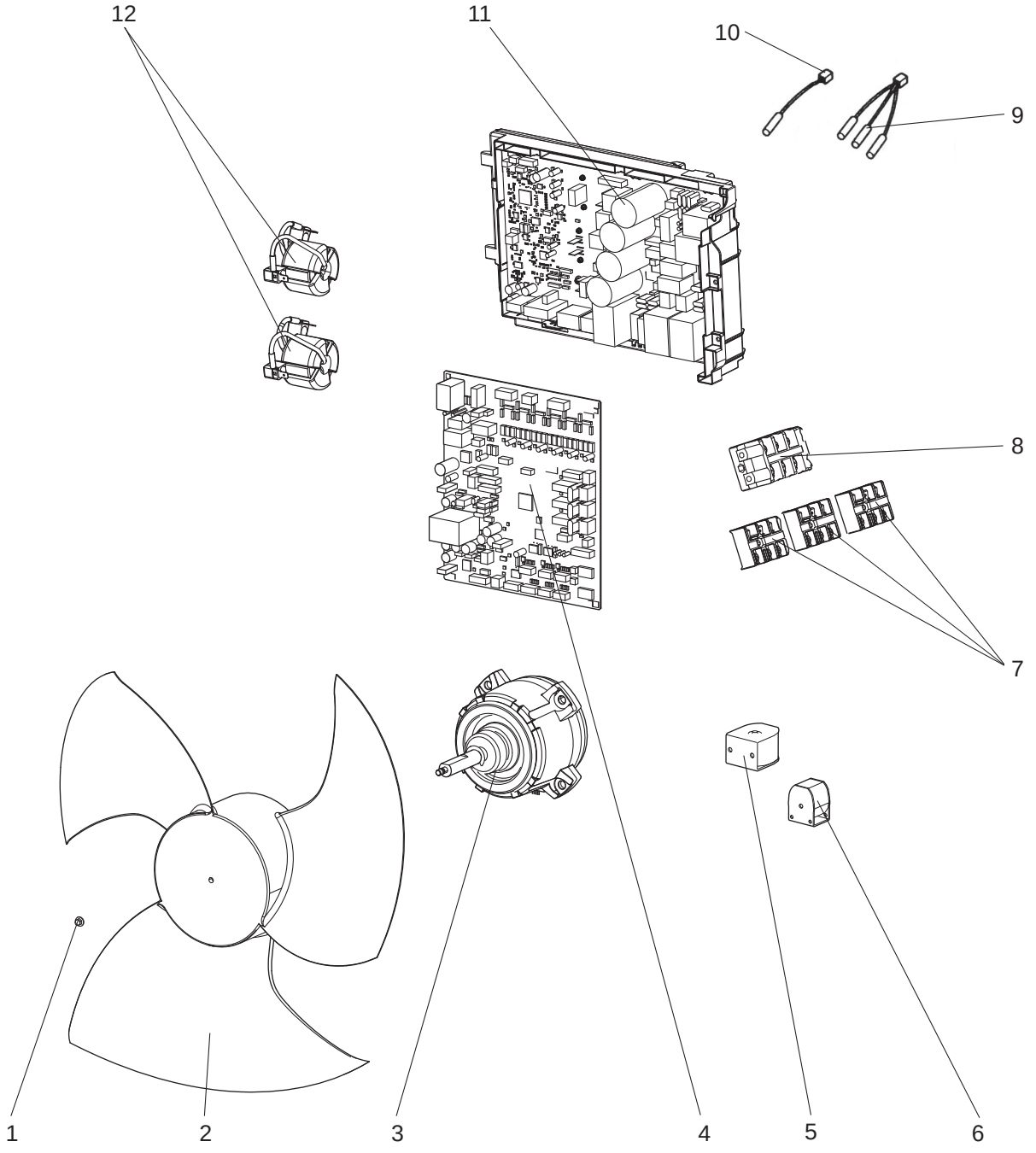

1-24. OUTDOOR UNIT FUNCTIONAL PARTS AND ELECTRICAL PARTS

1. The part quantity below indicates the required number of pieces per unit.

No.	Part No.	Part Name	MXZ-3C24NAHZ	MXZ-3C30NAHZ	Symbol in Wiring Diagram	Remarks
1	E27 A15 508	PROPELLER FAN NUT	1	1		
2	E22 N99 501	PROPELLER FAN	1	1		
3	E22 R55 301	OUTDOOR FAN MOTOR	1	1	MF	
4	E22 90H 450	OUTDOOR CONTROL P.C. BOARD	1			
4	E22 91H 450	OUTDOOR CONTROL P.C. BOARD		1		
5	E22 P01 490	2-WAY VALVE SOLENOID COIL	1	1	21S2	
6	E22 N99 490	R.V. COIL	1	1	21S4	
7	E22 C92 375	TERMINAL BLOCK	3	3	TB2, 3, 4	Indoor unit connecting
8	E22 N99 374	TERMINAL BLOCK	1	1	TB1	Power supply
9	E22 N99 308	THERMISTOR SET	1	1	RT61, RT62, RT68	DEFROST, DISCHARGE, OUTDOOR HEAT EXCHANGER
10	E22 N99 309	AMBIENT TEMPERATURE THERMISTOR	1	1	RT65	
11	E22 N99 440	OUTDOOR POWER P.C. BOARD	1	1		Includes heat sink and RT64
12	E22 N99 337	REACTOR	2	2	L1, L2	

MXZ-3C24NAHZ2 MXZ-3C30NAHZ2
MXZ-3C24NAHZ3 MXZ-3C30NAHZ3
1-25. OUTDOOR UNIT STRUCTURAL PARTS AND FUNCTIONAL PARTS

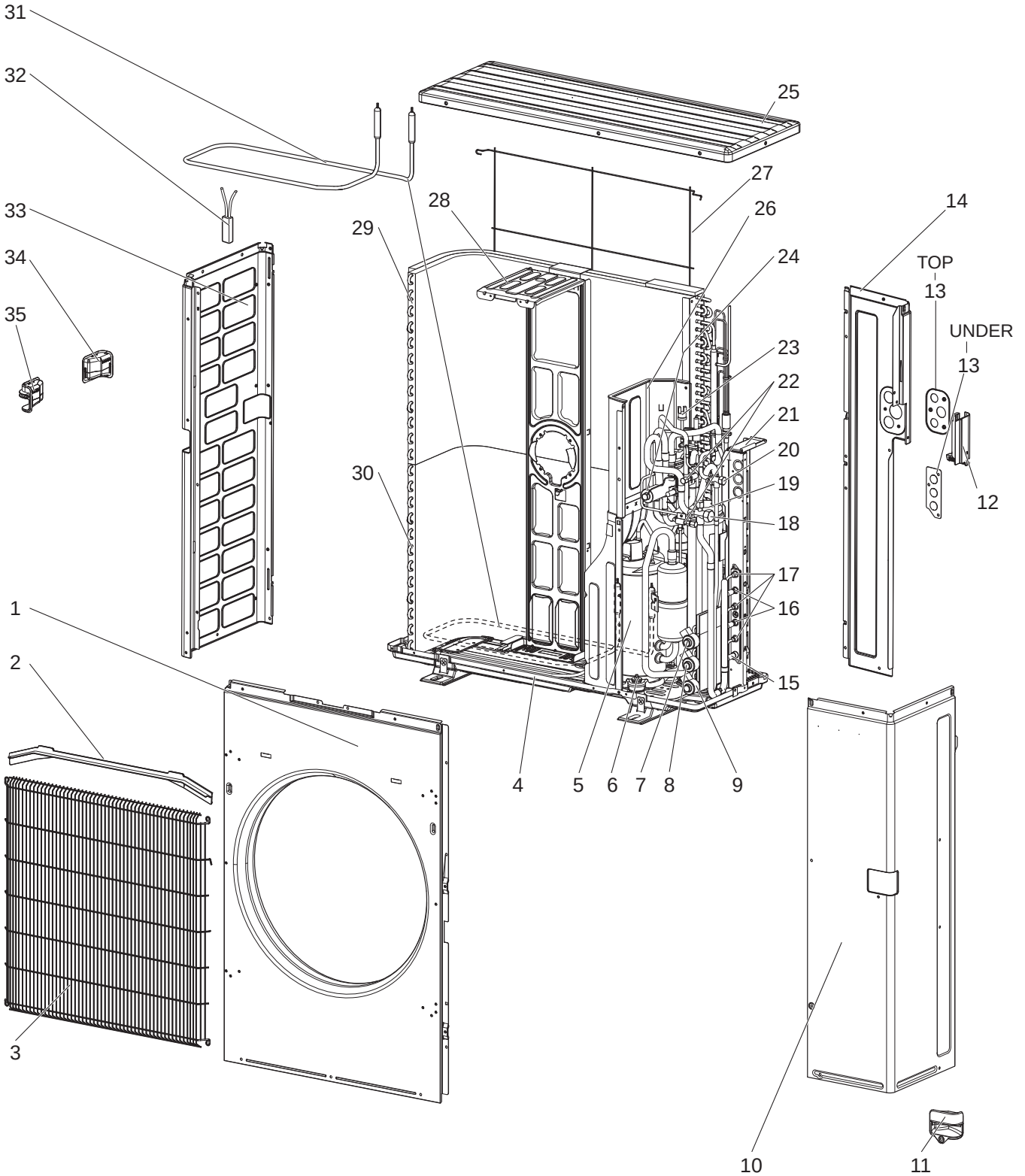

1-25. OUTDOOR UNIT STRUCTURAL PARTS AND FUNCTIONAL PARTS

1. The part quantity below indicates the required number of pieces per unit.
2. The circled No. indicates that the part is not shown in the figure.

No.	Part No.	Part Name	MXZ-3C24NAHZ2-U1	MXZ-3C24NAHZ3-U1	MXZ-3C30NAHZ2-U1	MXZ-3C30NAHZ3-U1	Symbol in Wiring Diagram	Remarks
1	E22 N99 232	FRONT PANEL	1	1	1	1		
2	E27 A15 531	ICE GUARD	1	1	1	1		
3	E27 942 521	GRILLE	1	1	1	1		
4	E22 N99 290	BASE ASSEMBLY	1	1	1	1		
5	E22 N99 900	COMPRESSOR	1	1	1	1	MC	MNB33FBTMC-L
6	E22 267 506	COMPRESSOR RUBBER SET	3	3	3	3		3 RUBBERS SET
7	E22 N99 640	EXPANSION VALVE	1	1	1	1		C room
7	E22 P02 493	LEV COIL	1	1	1	1	LEV C	C room, Connector: BLUE
8	E22 N99 640	EXPANSION VALVE	1	1	1	1		B room
8	E22 P01 493	LEV COIL	1	1	1	1	LEV B	B room, Connector: RED
9	E22 N99 640	EXPANSION VALVE	1	1	1	1		A room
9	E22 N99 493	LEV COIL	1	1	1	1	LEV A	A room, Connector: WHITE
10	E22 N99 245	SERVICE PANEL	1		1			Without LABEL
10	E22 09T 245	SERVICE PANEL		1		1		Without LABEL
11	E22 P01 009	HANDLE	1	1	1	1		
12	E22 N99 009	HANDLE (BACK)	1	1	1	1		
13	E22 N99 978	CONDUIT PLATE (TOP)	1	1	1	1		
13	E22 P01 978	CONDUIT PLATE (UNDER)	1	1	1	1		
14	E22 N99 233	BACK PANEL	1	1	1	1		
15	E22 D37 666	UNION (GAS) (ø12.7)	1	1	1	1		ø1/2, A room
16	E22 D36 666	UNION (GAS) (ø9.52)	2	2	2	2		ø3/8, B, C room
17	E22 D36 667	UNION (LIQUID) (ø6.35)	3	3	3	3		ø1/4, A, B, C room
18	E22 N99 661	STOP VALVE (GAS) (ø15.88)	1	1	1	1		ø5/8
19	E22 N99 932	ACCUMULATOR	1	1	1	1		
20	E22 N99 662	STOP VALVE (LIQUID) (ø9.52)	1	1	1	1		ø3/8
21	E22 P01 814	BACK PILLAR	1	1	1	1		
22	E22 N99 641	SERVICE PORT	2	2	2	2		
23	E22 W66 646	HIGH PRESSURE SWITCH	1	1	1	1	HPS	4.41 MPa (45.0 kg/cm^2)
24	E22 N99 961	4-WAY VALVE	1		1			
24	E22 24R 961	4-WAY VALVE		1		1		
25	E22 N99 297	TOP PANEL	1		1			Without LABEL
25	E22 09T 297	TOP PANEL		1		1		Without LABEL
26	E22 N99 293	SEPARATOR	1	1	1	1		
27	E22 N99 523	REAR GUARD	1	1	1	1		
28	E22 N99 515	MOTOR SUPPORT	1	1	1	1		
29	E22 N99 630	OUTDOOR HEAT EXCHANGER (TOP)	1	1	1	1		Includes capillary tubes
30	E22 P01 630	OUTDOOR HEAT EXCHANGER (UNDER)	1	1	1	1		Includes capillary tubes
31	E22 N99 526	DEFROST HEATER	1		1		H	
31	E22 96E 526	DEFROST HEATER		1		1	H	
32	E22 N99 381	HEATER PROTECTOR	1	1	1	1	26H	
33	E22 N99 086	SIDE PANEL (L)	1	1	1	1		
34	E27 943 009	HANDLE (REAR)	1	1	1	1		
35	E27 942 009	HANDLE (FRONT)	1	1	1	1		
36	E22 N99 492	2-WAY SOLENOID VALVE	1	1	1	1		
37	E22 939 936	CAPILLARY TUBE (ø4.0 x ø2.8 x 100)	3	3	3	3		O.D. 0.16 x I.D. 0.11 x 3.94
38	E22 820 936	CAPILLARY TUBE (ø2.5 x ø0.6 x 1000)	1	1	1	1		O.D. 0.10 x I.D. 0.02 x 39.37

MXZ-3C24NAHZ2 MXZ-3C30NAHZ2
MXZ-3C24NAHZ3 MXZ-3C30NAHZ3

1-26. OUTDOOR UNIT FUNCTIONAL PARTS AND ELECTRICAL PARTS

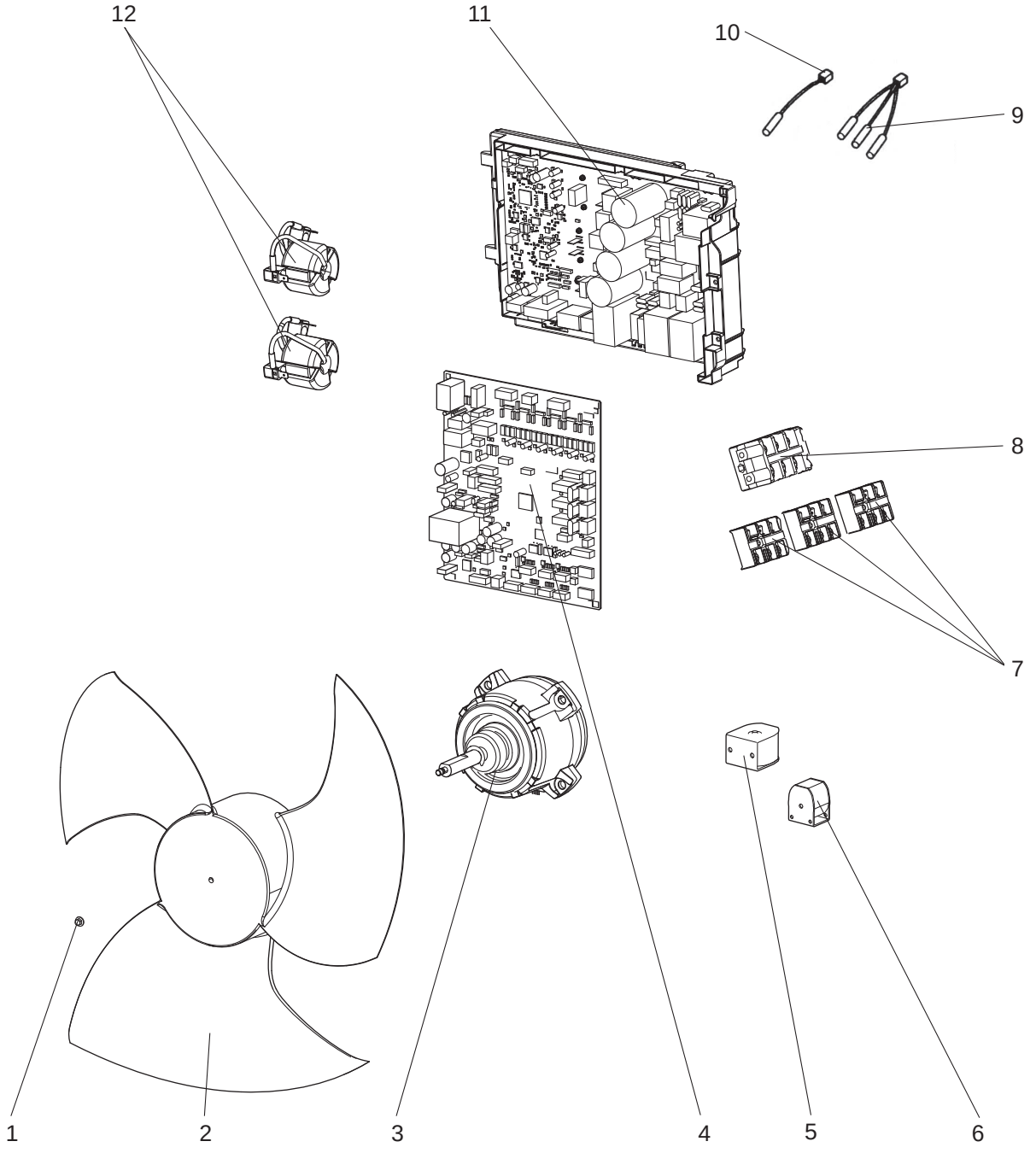

1-26. OUTDOOR UNIT FUNCTIONAL PARTS AND ELECTRICAL PARTS

1. The part quantity below indicates the required number of pieces per unit.

No.	Part No.	Part Name	MXZ-3C24NAHZ2-U1	MXZ-3C24NAHZ3-U1	MXZ-3C30NAHZ2-U1	MXZ-3C30NAHZ3-U1	Symbol in Wiring Diagram	Remarks
1	E27 A15 508	PROPELLER FAN NUT	1	1	1	1		
2	E22 N99 501	PROPELLER FAN	1	1	1	1		
3	E22 W69 301	OUTDOOR FAN MOTOR	1	1	1	1	MF	
4	E22 97E 450	OUTDOOR CONTROL P.C. BOARD	1					
4	E22 11X 450	OUTDOOR CONTROL P.C. BOARD		1				
4	E22 98E 450	OUTDOOR CONTROL P.C. BOARD			1			
4	E22 12X 450	OUTDOOR CONTROL P.C. BOARD				1		
5	E22 P01 490	2-WAY VALVE SOLENOID COIL	1	1	1	1	21S2	
6	E22 N99 490	R.V. COIL	1	1	1	1	21S4	
7	E22 C92 375	TERMINAL BLOCK	3	3	3	3	TB2, 3, 4	Indoor unit connecting
8	E22 N99 374	TERMINAL BLOCK	1	1	1	1	TB1	Power supply
9	E22 N99 308	THERMISTOR SET	1		1		RT61, RT62, RT68	DEFROST, DISCHARGE, OUTDOOR HEAT EXCHANGER
9	E27 Y96 308	THERMISTOR SET		1		1	RT61, RT62, RT68	DEFROST, DISCHARGE, OUTDOOR HEAT EXCHANGER
10	E22 N99 309	AMBIENT TEMPERATURE THERMISTOR	1	1	1	1	RT65	
11	E22 R55 440	OUTDOOR POWER P.C. BOARD	1		1			Includes heat sink and RT64
11	E22 18B 440	OUTDOOR POWER P.C. BOARD		1		1		Includes heat sink and RT64
12	E22 N99 337	REACTOR	2	2	2	2	L1, L2	

MXZ-3C24NAHZ4 MXZ-3C30NAHZ4
1-27. OUTDOOR UNIT STRUCTURAL PARTS AND FUNCTIONAL PARTS

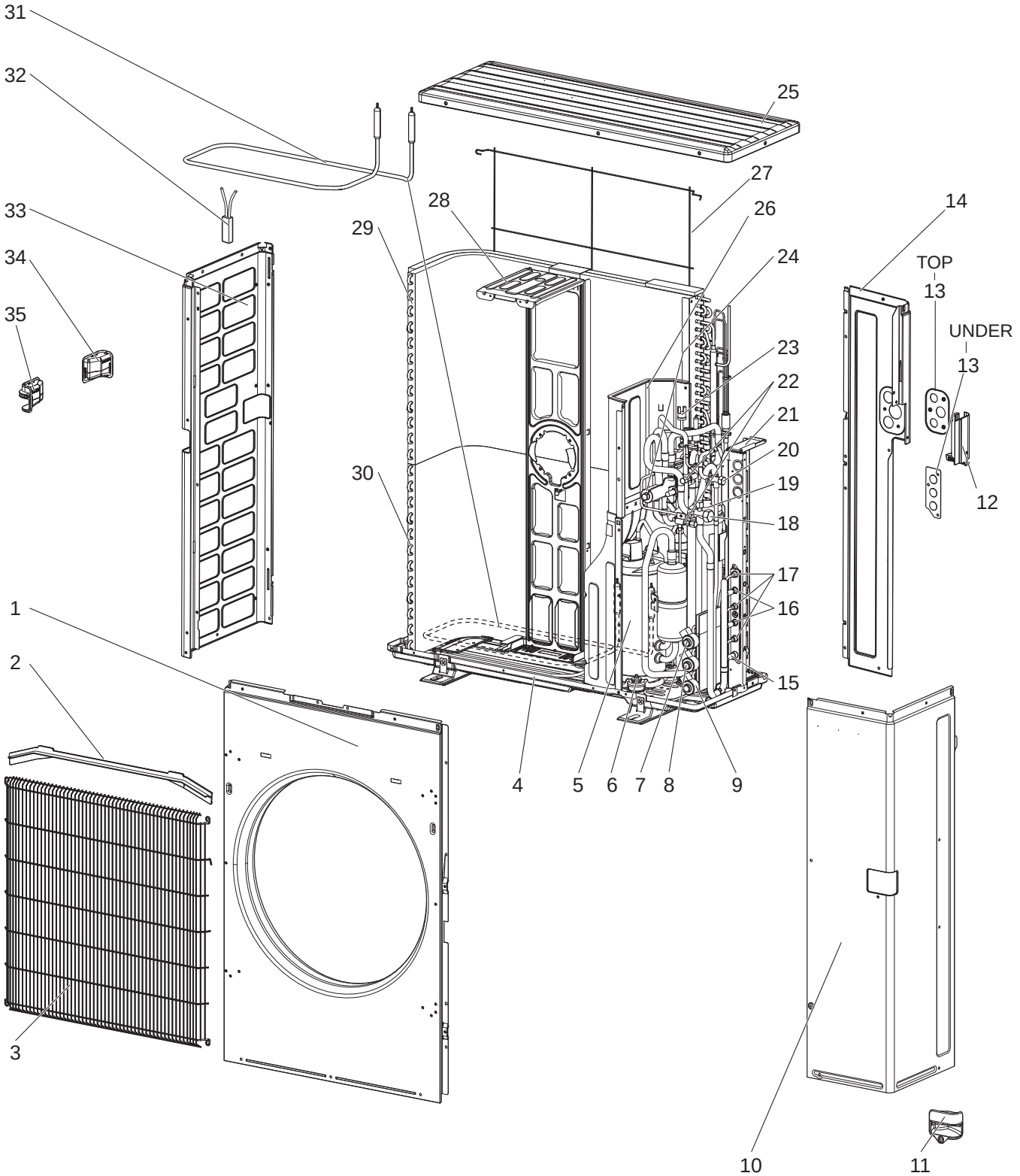

1-27. OUTDOOR UNIT STRUCTURAL PARTS AND FUNCTIONAL PARTS

1. The part quantity below indicates the required number of pieces per unit.
2. The circled No. indicates that the part is not shown in the figure.

No.	Part No.	Part Name	MXZ-3C24NAHZ4-U1	MXZ-3C30NAHZ4-U1	Symbol in Wiring Diagram	Remarks
1	E22 N99 232	FRONT PANEL	1	1		
2	E27 A15 531	ICE GUARD	1	1		
3	E27 942 521	GRILLE	1	1		
4	E22 N99 290	BASE ASSEMBLY	1	1		
5	E22 N99 900	COMPRESSOR	1	1	MC	MNB33FBTMC-L
6	E22 267 506	COMPRESSOR RUBBER SET	3	3		3 RUBBERS SET
7	E22 71W 640	EXPANSION VALVE	1	1		C room
7	E27 Y98 493	LEV COIL	1	1	LEV C	C room, Connector: BLUE
8	E22 71W 640	EXPANSION VALVE	1	1		B room
8	E27 Y97 493	LEV COIL	1	1	LEV B	B room, Connector: RED
9	E22 71W 640	EXPANSION VALVE	1	1		A room
9	E27 Y96 493	LEV COIL	1	1	LEV A	A room, Connector: WHITE
10	E22 09T 245	SERVICE PANEL	1	1		Without LABEL
11	E22 P01 009	HANDLE	1	1		
12	E22 N99 009	HANDLE (BACK)	1	1		
13	E22 N99 978	CONDUIT PLATE (TOP)	1	1		
13	E22 P01 978	CONDUIT PLATE (UNDER)	1	1		
14	E22 N99 233	BACK PANEL	1	1		Includes CONDUIT PLATE (TOP)
15	E22 D37 666	UNION (GAS) (ø12.7)	1	1		ø1/2, A room
16	E22 D36 666	UNION (GAS) (ø9.52)	2	2		ø3/8, B, C room
17	E22 D36 667	UNION (LIQUID) (ø6.35)	3	3		ø1/4, A, B, C room
18	E22 N99 661	STOP VALVE (GAS) (ø15.88)	1	1		ø5/8
19	E22 N99 932	ACCUMULATOR	1	1		
20	E22 73W 662	STOP VALVE (LIQUID) (ø9.52)	1	1		ø3/8
21	E22 P01 814	BACK PILLAR	1	1		
22	E22 N99 641	SERVICE PORT	2	2		
23	E22 71W 646	HIGH PRESSURE SWITCH	1	1	HPS	4.41 MPa (45.0 kg/cm^2)
24	E22 24R 961	4-WAY VALVE	1	1		
25	E22 09T 297	TOP PANEL	1	1		Without LABEL
26	E22 N99 293	SEPARATOR	1	1		
27	E22 N99 523	REAR GUARD	1	1		
28	E22 N99 515	MOTOR SUPPORT	1	1		
29	E22 73W 630	OUTDOOR HEAT EXCHANGER (TOP)	1	1		Includes capillary tubes
30	E22 74W 630	OUTDOOR HEAT EXCHANGER (UNDER)	1	1		Includes capillary tubes
31	E22 N99 526	DEFROST HEATER	1	1	H	
32	E22 N99 381	HEATER PROTECTOR	1	1	26H	
33	E22 N99 086	SIDE PANEL (L)	1	1		
34	E27 943 009	HANDLE (REAR)	1	1		
35	E27 942 009	HANDLE (FRONT)	1	1		
36	E22 N99 492	2-WAY SOLENOID VALVE	1	1		
37	E22 73W 936	CAPILLARY TUBE (ø4.0 x ø2.8 x 100)	3	3		O.D. 0.16 x I.D. 0.11 x 3.94
38	E22 13H 936	CAPILLARY TUBE (ø2.5 x ø0.6 x 1000)	1	1		O.D. 0.10 x I.D. 0.02 x 39.37

MXZ-3C24NAHZ4 MXZ-3C30NAHZ4
1-28. OUTDOOR UNIT FUNCTIONAL PARTS AND ELECTRICAL PARTS

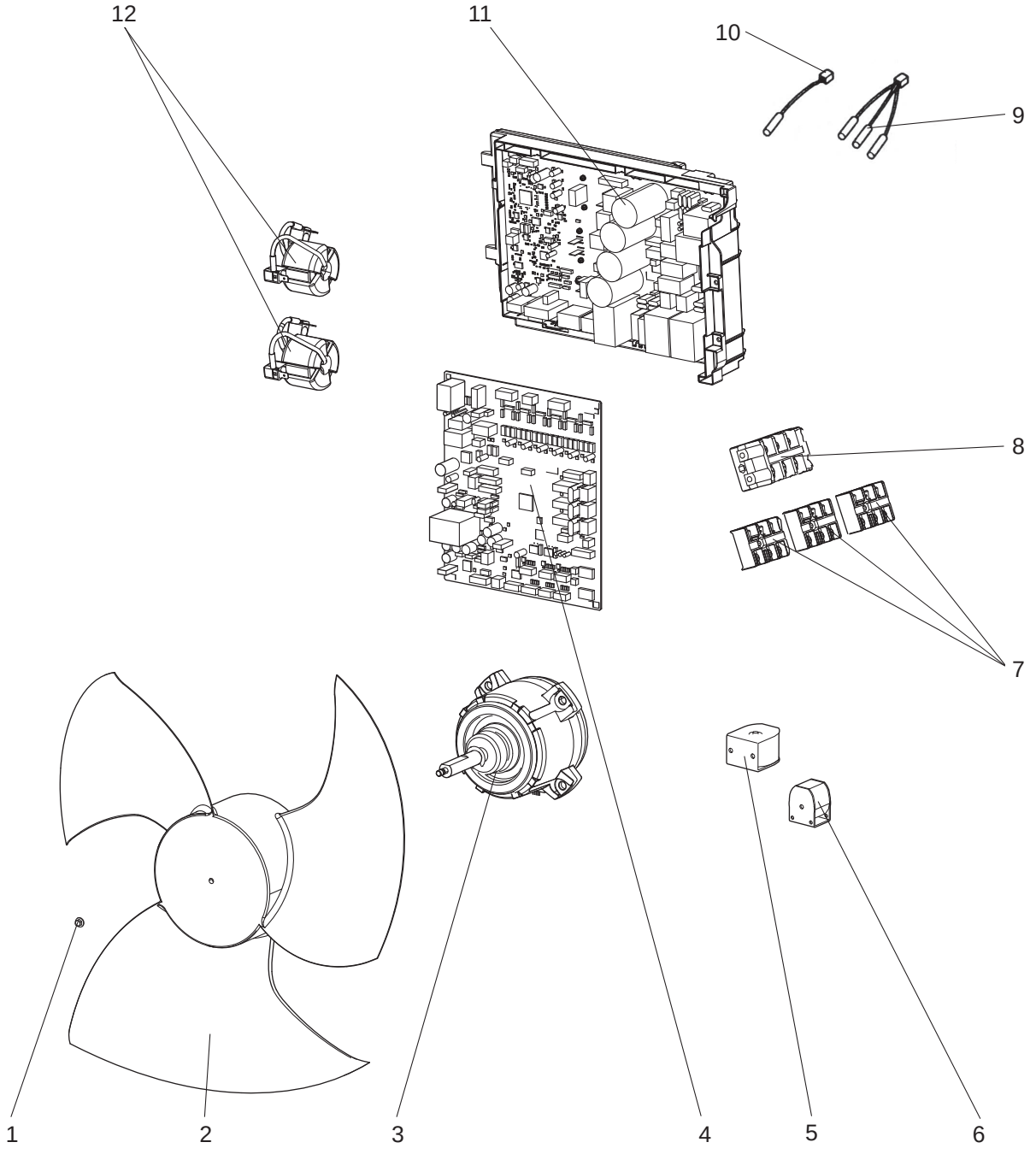

1-28. OUTDOOR UNIT FUNCTIONAL PARTS AND ELECTRICAL PARTS

1. The part quantity below indicates the required number of pieces per unit.

No.	Part No.	Part Name	MXZ-3C24NAHZ4-U1	MXZ-3C30NAHZ4-U1	Symbol in Wiring Diagram	Remarks
1	E27 A15 508	PROPELLER FAN NUT	1	1		
2	E22 N99 501	PROPELLER FAN	1	1		
3	E22 W69 301	OUTDOOR FAN MOTOR	1	1	MF	
4	E22 74W 450	OUTDOOR CONTROL P.C. BOARD	1			
4	E22 75W 450	OUTDOOR CONTROL P.C. BOARD		1		
5	E22 P01 490	2-WAY VALVE SOLENOID COIL	1	1	21S2	
6	E22 N99 490	R.V. COIL	1	1	21S4	
7	E22 C92 375	TERMINAL BLOCK	3	3	TB2, 3, 4	Indoor unit connecting
8	E22 73W 374	TERMINAL BLOCK	1	1	TB1	Power supply
9	E27 Y96 308	THERMISTOR SET	1	1	RT61, RT62, RT68	DEFROST, DISCHARGE, OUTDOOR HEAT EXCHANGER
10	E22 N99 309	AMBIENT TEMPERATURE THERMISTOR	1	1	RT65	
11	E22 73W 440	OUTDOOR POWER P.C. BOARD	1	1		Includes heat sink and RT64
12	E22 96E 337	REACTOR	2		L1, L2	
12	E22 N99 337	REACTOR		2	L1, L2	

2 OPTIONAL PARTS

2-1. DIFFERENT-DIAMETER PIPE

Unit : inch

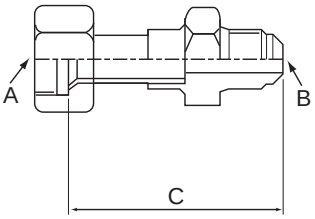

Applied unit	Model name	Connected pipes diameter	Diameter A	Diameter B	Length C
MXZ-2C20NA2 **MXZ-2C20NA3** **MXZ-2C20NA4** **MXZ-3C24NA** **MXZ-3C24NA2** **MXZ-3C24NA3** **MXZ-3C24NA4** **MXZ-3C30NA** **MXZ-3C30NA2** **MXZ-3C30NA3** **MXZ-3C30NA4** **MXZ-4C36NA** **MXZ-4C36NA2** **MXZ-4C36NA3** **MXZ-4C36NA4** **MXZ-5C42NA** **MXZ-5C42NA2** **MXZ-5C42NA3** **MXZ-5C42NA4** **MXZ-2C20NAHZ** **MXZ-2C20NAHZ2** **MXZ-2C20NAHZ3** **MXZ-2C20NAHZ4** **MXZ-3C24NAHZ** **MXZ-3C24NAHZ2** **MXZ-3C24NAHZ3** **MXZ-3C24NAHZ4** **MXZ-3C30NAHZ** **MXZ-3C30NAHZ2** **MXZ-3C30NAHZ3** **MXZ-3C30NAHZ4**	MAC-A454JP-E	ø3/8 — ø1/2	ø3/8	ø1/2	2.72
	MAC-A455JP-E	ø1/2 — ø3/8	ø1/2	ø3/8	2.56
	MAC-A456JP-E	ø1/2 — ø5/8	ø1/2	ø5/8	2.62
	PAC-493PI	ø1/4 — ø3/8	ø1/4	ø3/8	2.38
	PAC-SG76RJ-E	ø3/8 — ø5/8	ø3/8	ø5/8	4.00

2-2. OUTLET GUIDE

Changes air discharge direction.

Unit : inch

Applied unit		Model name
MXZ-3C24NA	MXZ-2C20NAHZ	PAC-SH96SG-E
MXZ-3C24NA2	MXZ-2C20NAHZ2	
MXZ-3C24NA3	MXZ-2C20NAHZ3	
MXZ-3C24NA4	MXZ-2C20NAHZ4	
MXZ-3C30NA	MXZ-3C24NAHZ	
MXZ-3C30NA2	MXZ-3C24NAHZ2	
MXZ-3C30NA3	MXZ-3C24NAHZ3	
MXZ-3C30NA4	MXZ-3C24NAHZ4	
MXZ-4C36NA	MXZ-3C30NAHZ	
MXZ-4C36NA2	MXZ-3C30NAHZ2	
MXZ-4C36NA3	MXZ-3C30NAHZ3	
MXZ-4C36NA4	MXZ-3C30NAHZ4	
MXZ-5C42NA		
MXZ-5C42NA2		
MXZ-5C42NA3		
MXZ-5C42NA4		
MXZ-2C20NA2	MXZ-2C20NA3	MAC-856SG
MXZ-2C20NA4		

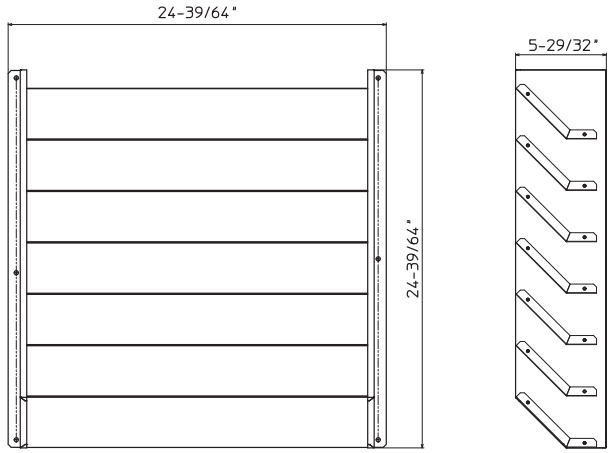

PAC-SH96SG-E

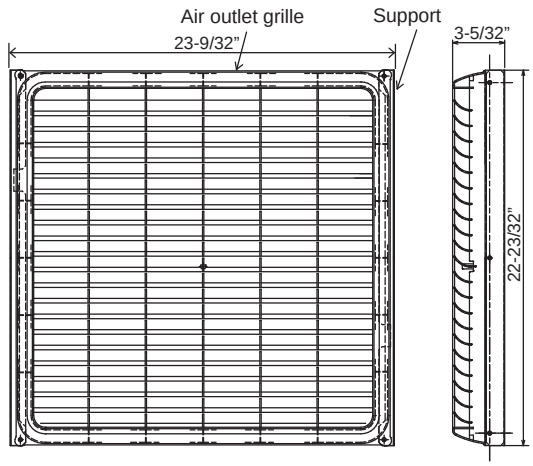

MAC-856SG

2-3. M-NET ADAPTER

Applied unit		Model name
MXZ-2C20NA2	MXZ-2C20NAHZ	PAC-IF01MNT-E
MXZ-2C20NA3	MXZ-2C20NAHZ2	
MXZ-2C20NA4	MXZ-2C20NAHZ3	
MXZ-3C24NA	MXZ-2C20NAHZ4	
MXZ-3C24NA2	MXZ-3C24NAHZ	
MXZ-3C24NA3	MXZ-3C24NAHZ2	
MXZ-3C24NA4	MXZ-3C24NAHZ3	
MXZ-3C30NA	MXZ-3C24NAHZ4	
MXZ-3C30NA2	MXZ-3C30NAHZ	
MXZ-3C30NA3	MXZ-3C30NAHZ2	
MXZ-3C30NA4	MXZ-3C30NAHZ3	
MXZ-4C36NA	MXZ-3C30NAHZ4	
MXZ-4C36NA2		
MXZ-4C36NA3		
MXZ-4C36NA4		
MXZ-5C42NA		
MXZ-5C42NA2		
MXZ-5C42NA3		
MXZ-5C42NA4		

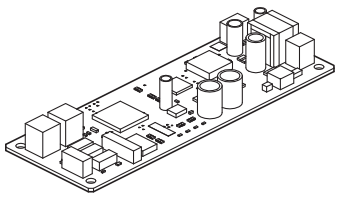

2-4. DRAIN SOCKET

Applied unit		Model name
MXZ-3C24NA	**MXZ-4C36NA**	PAC-SG60DS-E
MXZ-3C24NA2	**MXZ-4C36NA2**	
MXZ-3C24NA3	**MXZ-4C36NA3**	
MXZ-3C24NA4	**MXZ-4C36NA4**	
MXZ-3C30NA	**MXZ-5C42NA**	
MXZ-3C30NA2	**MXZ-5C42NA2**	
MXZ-3C30NA3	**MXZ-5C42NA3**	
MXZ-3C30NA4	**MXZ-5C42NA4**	

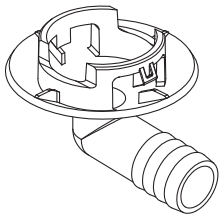

2-5. BASE HEATER

Applied unit		Model name
MXZ-3C24NA	**MXZ-4C36NA**	PAC-645BH-E
MXZ-3C24NA2	**MXZ-4C36NA2**	
MXZ-3C24NA3	**MXZ-4C36NA3**	
MXZ-3C24NA4	**MXZ-4C36NA4**	
MXZ-3C30NA	**MXZ-5C42NA**	
MXZ-3C30NA2	**MXZ-5C42NA2**	
MXZ-3C30NA3	**MXZ-5C42NA3**	
MXZ-3C30NA4	**MXZ-5C42NA4**	
MXZ-2C20NA2	**MXZ-2C20NA3**	PAC-646BH-E
MXZ-2C20NA4		

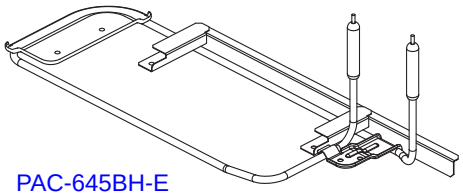

PAC-645BH-E

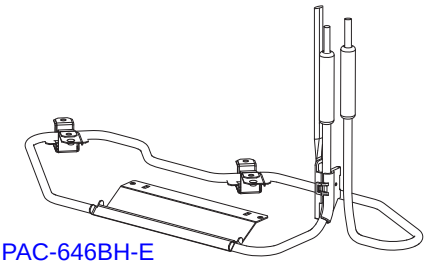

PAC-646BH-E

Components

①	Base heater	1	④	Base heater support (2)	1	⑦	Cable tie	2
②	Heater guard	1	⑤	Clamp	1	⑧	Fastener	2
③	Base heater support (1)	1	⑥	Screw	8	⑨	Spec label	1

MITSUBISHI ELECTRIC CORPORATION

HEAD OFFICE: TOKYO BUILDING, 2-7-3, MARUNOUCHI, CHIYODA-KU, TOKYO 100-8310, JAPAN

© Copyright 2014 MITSUBISHI ELECTRIC CORPORATION

Issued: Aug. 2022. No. OBB702 REVISED EDITION-K
Issued: Jun. 2022. No. OBB702 REVISED EDITION-J
Issued: Apr. 2022. No. OBB702 REVISED EDITION-H
Issued: Dec. 2021. No. OBB702 REVISED EDITION-G
Issued: Jul. 2021. No. OBB702 REVISED EDITION-F
Issued: Aug. 2020. No. OBB702 REVISED EDITION-E
Issued: Apr. 2017. No. OBB702 REVISED EDITION-D
Issued: Feb. 2016. No. OBB702 REVISED EDITION-C
Issued: Nov. 2014. No. OBB702 REVISED EDITION-B
Issued: Oct. 2014. No. OBB702 REVISED EDITION-A
Published: Sep. 2014. No. OBB702
Made in Japan

Specifications are subject to change without notice.