MITSUBISHI ELECTRIC

SPLIT-TYPE, HEAT PUMP AIR CONDITIONERS

HFC utilized R410A

February 2018
No. OCH612
REVISED EDITION-B

TECHNICAL & SERVICE MANUAL

<Outdoor unit>
[Model Name] **[Service Ref.]**

PUMY-P36NKMU1 **PUMY-P36NKMU1**

PUMY-P48NKMU1 **PUMY-P48NKMU1**

Revision:
- Corrected some descriptions in "4-2. CORRECTION BY TEMPERATURE" in REVISED EDITION-B.
- Some other descriptions have been also modified.

OCH612 REVISED EDITION-A is void.

Salt proof model

PUMY-P36NKMU1-BS **PUMY-P36NKMU1-BS**

PUMY-P48NKMU1-BS **PUMY-P48NKMU1-BS**

Note:
- This service manual describes technical data of the outdoor units only.

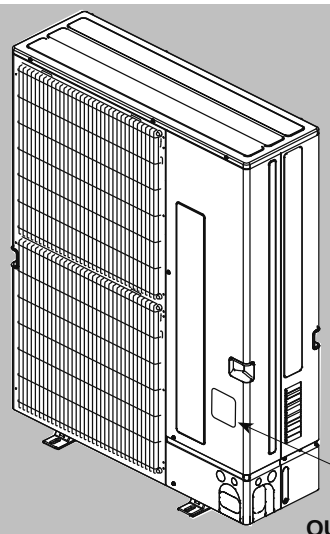

OUTDOOR UNIT

CONTENTS

1. SAFETY PRECAUTION 2
2. OVERVIEW OF UNITS 5
3. SPECIFICATIONS 10
4. DATA 11
5. OUTLINES AND DIMENSIONS 27
6. WIRING DIAGRAM 28
7. NECESSARY CONDITIONS FOR SYSTEM CONSTRUCTION 29
8. TROUBLESHOOTING 39
9. ELECTRICAL WIRING 114
10. REFRIGERANT PIPING TASKS 119
11. DISASSEMBLY PROCEDURE 123

PARTS CATALOG (OCB612)

CITY MULTI

1 SAFETY PRECAUTION

1-1. CAUTIONS RELATED TO NEW REFRIGERANT

Cautions for units utilizing refrigerant R410A

Use new refrigerant pipes.

Avoid using thin pipes.

Make sure that the inside and outside of refrigerant piping is clean and it has no contaminants such as sulfur, oxides, dirt, shaving particles, etc, which are hazard to refrigerant cycle.
In addition, use pipes with specified thickness.

Contamination inside refrigerant piping can cause deterioration of refrigerant oil, etc.

Store the piping indoors, and keep both ends of the piping sealed until just before brazing.
(Leave elbow joints, etc. in their packaging.)

If dirt, dust or moisture enters into refrigerant cycle, that can cause deterioration of refrigerant oil or malfunction of compressor.

The refrigerant oil applied to flare and flange connections must be ester oil, ether oil or alkylbenzene oil in a small amount.

If large amount of mineral oil enters, that can cause deterioration of refrigerant oil, etc.

Charge refrigerant from liquid phase of gas cylinder.

If the refrigerant is charged from gas phase, composition change may occur in refrigerant and the efficiency will be lowered.

Do not use refrigerant other than R410A.

If other refrigerant (R22, etc.) is used, chlorine in refrigerant can cause deterioration of refrigerant oil, etc.

Use a vacuum pump with a reverse flow check valve.

Vacuum pump oil may flow back into refrigerant cycle and that can cause deterioration of refrigerant oil, etc.

Use the following tools specifically designed for use with R410A refrigerant.

The following tools are necessary to use R410A refrigerant.

Tools for R410A	
Gauge manifold	Flare tool
Charge hose	Size adjustment gauge
Gas leak detector	Vacuum pump adaptor
Torque wrench	Electronic refrigerant charging scale

Handle tools with care.

If dirt, dust or moisture enters into refrigerant cycle, that can cause deterioration of refrigerant oil or malfunction of compressor.

Do not use a charging cylinder.

If a charging cylinder is used, the composition of refrigerant will change and the efficiency will be lowered.

Ventilate the room if refrigerant leaks during operation. If refrigerant comes into contact with a flame, poisonous gases will be released.

Use the specified refrigerant only.

Never use any refrigerant other than that specified.
Doing so may cause a burst, an explosion, or fire when the unit is being used, serviced, or disposed of.
Correct refrigerant is specified in the manuals and on the spec labels provided with our products.
We will not be held responsible for mechanical failure, system malfunction, unit breakdown or accidents caused by failure to follow the instructions.

[1] Cautions for service

(1) Perform service after recovering the refrigerant left in unit completely.
(2) Do not release refrigerant in the air.
(3) After completing service, charge the cycle with specified amount of refrigerant.
(4) If moisture or foreign matter might have entered the refrigerant piping during service, ensure to remove them.

[2] Additional refrigerant charge

When charging directly from cylinder

(1) Check that cylinder for R410A on the market is a syphon type.
(2) Charging should be performed with the cylinder of syphon stood vertically. (Refrigerant is charged from liquid phase.)

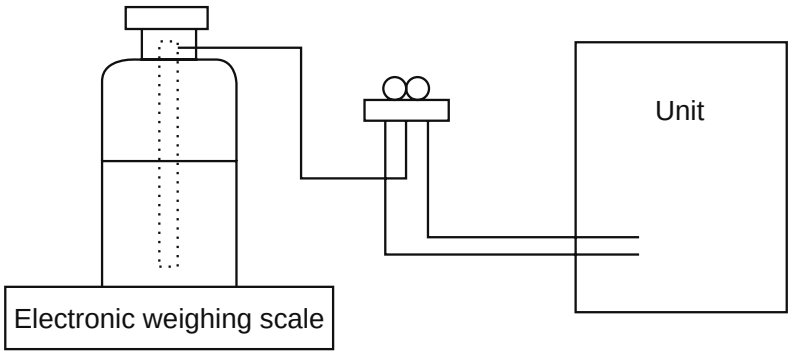

[3] Service tools

Use the below service tools as exclusive tools for R410A refrigerant.

No.	Tool name	Specifications
①	Gauge manifold	· Only for R410A
		· Use the existing fitting specifications. (UNF1/2)
		· Use high-tension side pressure of 768.7 PSIG [5.3 MPa.G] or over.
②	Charge hose	· Only for R410A
		· Use pressure performance of 738.2 PSIG [5.09MPa.G] or over.
③	Electronic weihging scale	—
④	Gas leak detector	· Use the detector for R134a, R407C or R410A.
⑤	Adaptor for reverse flow check	· Attach on vacuum pump.
⑥	Refrigerant charge base	—
⑦	Refrigerant cylinder	· Only for R410A · Top of cylinder (Pink) · Cylinder with syphon
⑧	Refrigerant recovery equipment	—

1-2. PRECAUTIONS FOR SALT PROOF TYPE "-BS" MODEL

Although "-BS" model has been designed to be resistant to salt damage, observe the following precautions to maintain the performance of the unit.

(1) Avoid installing the unit in a location where it will be exposed directly to seawater or sea breeze.
(2) If the cover panel may become covered with salt, be sure to install the unit in a location where the salt will be washed away by rainwater. (If a sunshade is installed, rainwater may not clean the panel.)
(3) To ensure that water does not collect in the base of the outdoor unit, make sure that the base is level, not at angle. Water collecting in the base of the outdoor unit could cause rust.
(4) If the unit is installed in a coastal area, clean the unit with water regularly to remove any salt build-up.
(5) If the unit is damaged during installation or maintenance, be sure to repair it.
(6) Be sure to check the condition of the unit regularly.
(7) Be sure to install the unit in a location with good drainage.

Cautions for refrigerant piping work

New refrigerant R410A is adopted for replacement inverter series. Although the refrigerant piping work for R410A is same as for R22, exclusive tools are necessary so as not to mix with different kind of refrigerant. Furthermore as the working pressure of R410A is 1.6 times higher than that of R22, their sizes of flared sections and flare nuts are different.

① Thickness of pipes

Because the working pressure of R410A is higher compared to R22, be sure to use refrigerant piping with thickness shown below. (Never use pipes of 7/256 in [0.7 mm] or below.)

Diagram below: Piping diameter and thickness

Nominal dimensions (in)	Outside diameter (mm)	Thickness : in [mm]	
		R410A	R22
1/4	6.35	1/32 [0.8]	1/32 [0.8]
3/8	9.52	1/32 [0.8]	1/32 [0.8]
1/2	12.70	1/32 [0.8]	1/32 [0.8]
5/8	15.88	5/128 [1.0]	5/128 [1.0]
3/4	19.05	—	5/128 [1.0]

② Dimensions of flare cutting and flare nut

The component molecules in HFC refrigerant are smaller compared to conventional refrigerants. In addition to that, R410A is a refrigerant, which has higher risk of leakage because its working pressure is higher than that of other refrigerants. Therefore, to enhance airtightness and intensity, flare cutting dimension of copper pipe for R410A has been specified separately from the dimensions for other refrigerants as shown below. The dimension B of flare nut for R410A also has partly been changed to increase intensity as shown below. Set copper pipe correctly referring to copper pipe flaring dimensions for R410A below. For 1/2 and 5/8 inch, the dimension B changes.

Use torque wrench corresponding to each dimension.

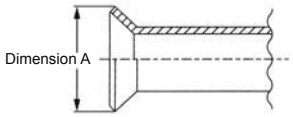

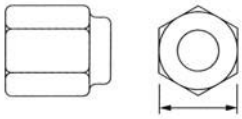

Dimension B

Flare cutting dimensions — Unit : in [mm]

Nominal dimensions (in)	Outside diameter (mm)	Dimension A ($^{+0}_{-0.4}$)	
		R410A	R22
1/4	6.35	11/32-23/64 [9.1]	9.0
3/8	9.52	1/2-33/64 [13.2]	13.0
1/2	12.70	41/64-21/32 [16.6]	16.2
5/8	15.88	49/64-25/32 [19.7]	19.4
3/4	19.05	—	23.3

Flare nut dimensions — Unit: in [mm]

Nominal dimensions (in)	Outside diameter (mm)	Dimension B	
		R410A	R22
1/4	6.35	43/64 [17.0]	17.0
3/8	9.52	7/8 [22.0]	22.0
1/2	12.70	1-3/64 [26.0]	24.0
5/8	15.88	1-9/64 [29.0]	27.0
3/4	19.05	—	36.0

③ Tools for R410A (The following table shows whether conventional tools can be used or not.)

Tools and materials	Use	R410A tools	Can R22 tools be used?	Can R407C tools be used?
Gauge manifold	Air purge, refrigerant charge and operation check	Tool exclusive for R410A	×	×
Charge hose		Tool exclusive for R410A	×	×
Gas leak detector	Gas leak check	Tool for HFC refrigerant	×	○
Refrigerant recovery equipment	Refrigerant recovery	Tool exclusive for R410A	×	×
Refrigerant cylinder	Refrigerant charge	Tool exclusive for R410A	×	×
Applied oil	Apply to flared section	Ester oil, ether oil and alkylbenzene oil (minimum amount)	×	Ester oil, ether oil: ○ Alkylbenzene oil: minimum amount
Safety charger	Prevent compressor malfunction when charging refrigerant by spraying liquid refrigerant	Tool exclusive for R410A	×	×
Charge valve	Prevent gas from blowing out when detaching charge hose	Tool exclusive for R410A	×	×
Vacuum pump	Vacuum drying and air purge	Tools for other refrigerants can be used if equipped with adopter for reverse flow check	△ (Usable if equipped with adopter for reverse flow)	△ (Usable if equipped with adopter for reverse flow)
Flare tool	Flaring work of piping	Tools for other refrigerants can be used by adjusting flaring dimension	△ (Usable by adjusting flaring dimension)	△ (Usable by adjusting flaring dimension)
Bender	Bend the pipes	Tools for other refrigerants can be used	○	○
Pipe cutter	Cut the pipes	Tools for other refrigerants can be used	○	○
Welder and nitrogen gas cylinder	Weld the pipes	Tools for other refrigerants can be used	○	○
Refrigerant charging scale	Refrigerant charge	Tools for other refrigerants can be used	○	○
Vacuum gauge or thermistor vacuum gauge and vacuum valve	Check the degree of vacuum. (Vacuum valve prevents back flow of oil and refrigerant to thermistor vacuum gauge)	Tools for other refrigerants can be used	○	○
Charging cylinder	Refrigerant charge	Tool exclusive for R410A	×	—

× : Prepare a new tool. (Use the new tool as the tool exclusive for R410A.)
△ : Tools for other refrigerants can be used under certain conditions.
○ : Tools for other refrigerants can be used.

2 OVERVIEW OF UNITS

2-1. Auxiliary HEATING ON/OFF CONTROL SET-UP

(1) Auxiliary heating operation controls another heat source that depends on the main system's operations, which means the interlock operation shown in "b)" will be possible.

a) Indoor unit must be R410A UL model for this function to operate.

b) Different Indoor unit applications that can be applied:

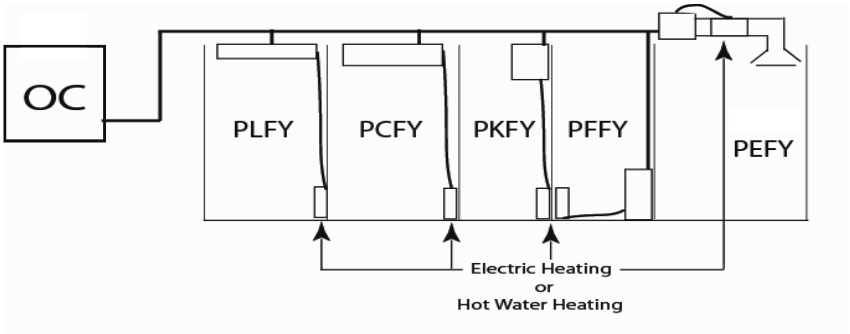

(2) Outdoor unit DIPSW5-4 for auxiliary heating control:

Set DIPSW5-4 when power is turned off at unit.

OFF: Disable auxiliary Heating Function (Initial setting)
ON : Enable auxiliary Heating Function

(3) Determine required indoor fans speed during defrost mode:

To set the fan speed, see the chapter referring to heater control in the indoor unit's Technical & Service Manual.

(4) Determine fan airflow setting during indoor thermo-OFF conditions:

a) These settings are done within Indoor DIPSW1-7 and DIPSW1-8, see chart below for options.

b) Recommended SW1-7 OFF and SW1-8 ON will determine airflow based on "Setting on the remote controller".

Auxiliary heating signal		Fan speed setting	Fan speed setting
Thermo condition		OFF	ON
SW1-7	SW1-8		
OFF	OFF	Very low	Setting on remote controller
ON	OFF	Low	
OFF	ON	Setting on remote controller	
ON	ON	Stopped	

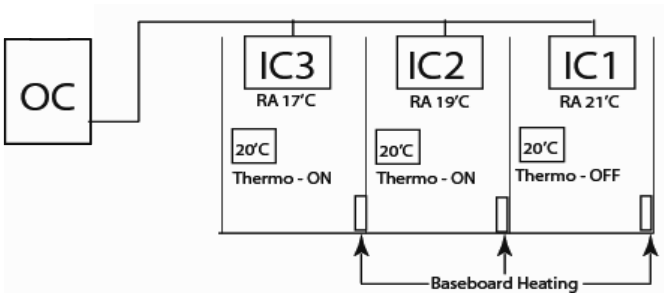

(5) Setting outdoor unit and auxiliary heat switch over temperatures.

When the DIPSW 5-4 is set to "ON", the outdoor unit and the contact output operates as shown below.

a) Outdoor default setting and operations are shown below:

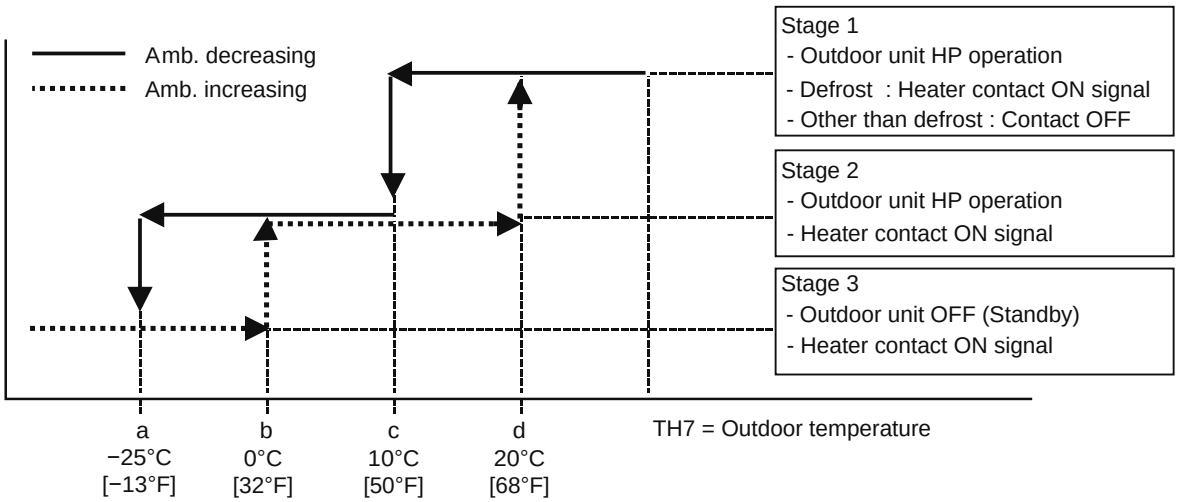

When the set temperature ranges overlap, the previously set pattern (1,2 or 3) has a priority.
The stage 1 has the highest priority, 2 the second and then 3.

b) Based on above chart listed the sequence of operation on "On ambient decrease"

Stage 1 :(TH7 = > 50°F [10℃]) : the outdoor unit runs in HP mode.
Stage 2 :(TH7 = 50 to −13°F [10 to −25℃]) : the outdoor unit runs in HP mode with auxiliary heating.
Stage 3 :(TH7 = < −13°F [−25℃]) : Auxiliary heating only (Outdoor unit is OFF).

c) Based on above chart listed the sequence of operation on "On ambient increase"

Stage 3 :(TH7 = < 32°F [0℃]) : Auxiliary heating only (Outdoor unit is OFF).
Stage 2 :(TH7 = > 32 to 68°F [0 to 20℃]) : Auxiliary heating with outdoor unit in HP mode.
Stage 1 :(TH7 = > 68°F [20℃]) : Outdoor unit in HP mode only.

(6) Locally procured wiring

A basic connection method is shown.

(i.e. interlocked operation with the electric heater with the fan speed setting on high)

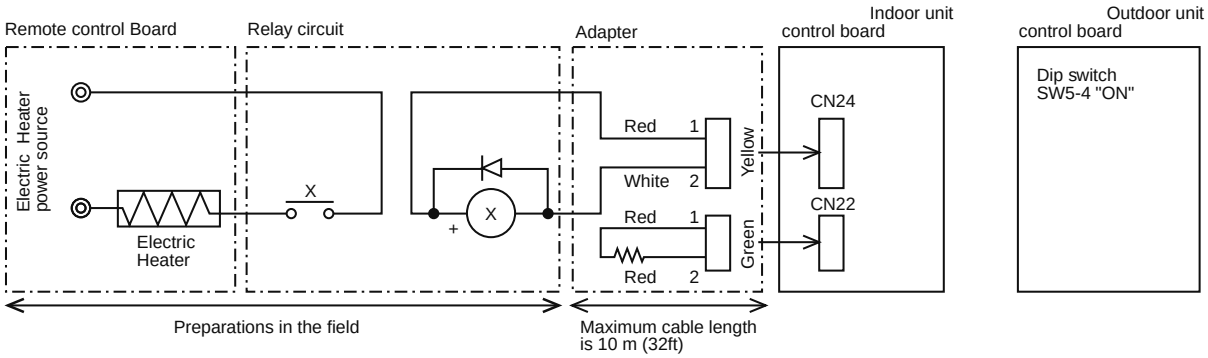

For relay X use the specifications given below operation coil

Rated voltage : 12 V DC

Power consumption :0.9W or less

*Use the diode that is recommended by the relay manufacturer at both ends of the relay coil.

The length of the electrical wiring for the PAC-YU24HT is 2 meters (6-1/2 ft)

To extend this length, use sheathed 2-core cable.

Control cable type : CVV, CVS, CPEV, or equivalent.

Cable size : 0.5 mm^2 to 1.25 mm^2 (AWG22 to AWG16)

Do not extend the cable more than 10 meters (32 ft).

Recommended circuit

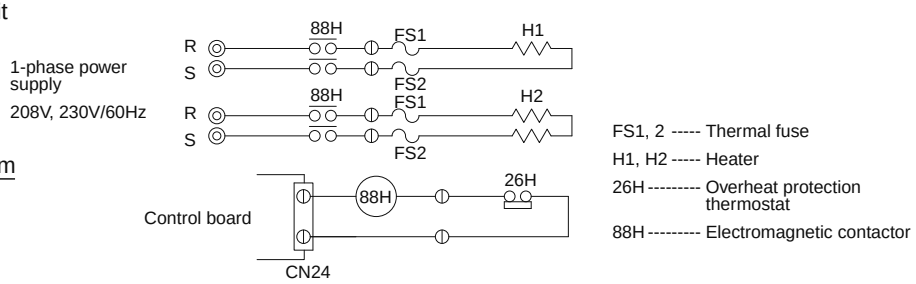

Wiring diagram

2-2. UNIT CONSTRUCTION

Outdoor unit		4HP	5HP
		PUMY-P36NKMU1 PUMY-P36NKMU1-BS	PUMY-P48NKMU1 PUMY-P48NKMU1-BS
Applicable indoor unit	Capacity	Type 06 to Type 36	Type 06 to Type 54
	Number of units	1 to 7 unit	1 to 10 unit
	Total system wide capacity	50 to 130% of outdoor unit capacity	

	CMY-Y62-G-E	CMY-Y64-G-E	CMY-Y68-G-E
Branching pipe components	Branch header (2 branches)	Branch header (4 branches)	Branch header (8 branches)

Model	Cassette Ceiling					Ceiling Concealed			Wall Mounted			Ceiling Suspended	Floor standing		Multi-position air handling unit
	4-way flow				1-way flow								Exposed	Concealed	
	PLFY-EP	PLFY-P	PLFY-P	PLFY-P	PMFY-P	PEFY-P			PKFY-P			PCFY-P	PFFY-P	PFFY-P	PVFY-P
Capacity	NEMU-E	NEMU-E	NCMU-E	NFMU-E	NBMU-E	NMAU	NMSU-E	NHMU-E	NBMU-E	NHMU-E	NKMU-E	NKMU-E	NEMU-E	NRMU-E	NAMU-E
05	–	–	–	○	–	–	–	–	–	–	–	–	–	–	–
06	–	–	–	–	○	○	○	–	○	–	–	–	○	○	–
08	–	○	○	○	○	○	○	–	–	○	–	–	○	○	–
12	○	○	○	○	○	○	○	–	–	○	–	–	○	○	○
15	○	○	○	○	○	○	○	○	–	○	–	○	○	○	–
18	○	○	–	○	–	○	○	○	–	○	–	–	○	○	○
24	○	○	–	–	–	○	○	○	–	–	○	○	○	○	○
27	–	–	–	–	–	○	–	○	–	–	–	–	–	–	–
30	○	○	–	–	–	○	–	○	–	–	○	○	–	–	○
36	○	○	–	–	–	○	–	○	–	–	–	○	–	–	○
48	○	○	–	–	–	○	–	○	–	–	–	–	–	–	○
54	–	–	–	–	–	○	–	○	–	–	–	–	–	–	○

–: Not connectable
○: Connectable

Remote controller	Name	M-NET remote controller	MA remote controller
	Model number	PAR-F27MEA-E PAR-U01MEDU	PAR-21MAA, PAR-30/31/32MAA
	Functions	• A handy remote controller for use in conjunction with the Melans centralized management system. • Addresses must be set.	• Addresses setting is not necessary.

2-3. UNIT SPECIFICATIONS

(1) Outdoor Unit

Service Ref.		PUMY-P36NKMU1 PUMY-P36NKMU1-BS	PUMY-P48NKMU1 PUMY-P48NKMU1-BS
Capacity	Cooling (kBTU/h)	36.0	48.0
	Heating (kBTU/h)	42.0	54.0
Compressor (kW)		2.8	3.3

Cooling/Heating capacity indicates the maximum value at operation under the following condition.

Cooling Indoor D.B. 80°F/W.B. 67°F: [D.B. 26.7°C/W.B. 19.4°C]
Outdoor D.B. 95°F/W.B. 75°F: [D.B. 35°C/W.B. 23.9°C]
Heating Indoor D.B. 70°F/W.B. 60°F: [D.B. 21.1°C/W.B. 15.6°C]
Outdoor D.B. 47°F/W.B. 43°F: [D.B. 8.3°C/W.B. 6.1°C]

(2) Method for identifying MULTI-S model

■ **Outdoor unit <When using model 48 >**

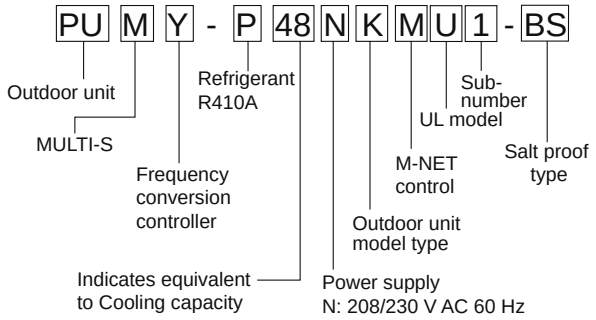

(3) Operating temperature range

	Cooling	Heating
Indoor-side intake air temperature	W.B. 59 to 75°F [15 to 24°C]	D.B. 59 to 81°F [15 to 27°C]
Outdoor-side intake air temperature	D.B. 23 to 115°F [−5 to 46°C]*1,*2	W.B. −13 to 59°F [−25 to 15°C]

Notes: D.B. : Dry Bulb Temperature
W.B. : Wet Bulb Temperature

*1 50 to 115°F [10 to 46°C] D.B. : When connecting PKFY-P06NBMU, PKFY-P08NHMU, PFFY-P06/08/12NEMU, and PFFY-P06/08/12NRMU type indoor unit.

*2 5 to 115°F [−15 to 46°C] D.B.: When using an optional air protect guide [PAC-SH95AG-E].
However, this condition does not apply to the indoor units listed in *1.

3 SPECIFICATIONS

Model			PUMY-P36NKMU1 PUMY-P36NKMU1-BS	PUMY-P48NKMU1 PUMY-P48NKMU1-BS
Power source			208/230 V AC, 60 Hz	
Cooling (Nominal)	Capacity	BTU/h*1	36,000	48,000
	Power input	kW	2,445	3,690
	Current input 208V/230V	A	11.9/10.8	18.0/16.3
	EER	kBTU/h	14.7	13.0
Temp. range of cooling	Indoor temp.	W.B.	59 to 75°F [15 to 24°C]	
	Outdoor temp.	D.B.	23 to 115°F [−5 to 46°C]*3*4	
Heating (Nominal)	Capacity	BTU/h*2	42,000	54,000
	Power input	kW	3,100	4,085
	Current input 208V/230V	A	15.1/13.7	19.9/18.0
	COP	W/W	3.97	3.87
Breaker size			40A	
Max. fuse size			44A	
Min. circuit ampacity			31A	
Temp. range of heating	Indoor temp.	D.B.	59 to 81°F [15 to 27°C]	
	Outdoor temp.	W.B.	−13 to 59°F [−25 to 15°C]	
Indoor unit connectable	Total capacity		50 to 130% of outdoor unit capacity	
	Model/Quantity	Citymulti	06–36/7	06–54/10
Sound pressure level (measured in anechoic room)		dB <A>	49/53	51/54
Refrigerant piping diameter	Liquid pipe	inch (mm)	3/8 (9.52)	
	Gas pipe	inch (mm)	5/8 (15.88)	
FAN	Type × Quantity		Propeller Fan × 2	
	Air flow rate	m³/min	110	
		L/s	1,834	
		cfm	3,885	
	Control, Driving mechanism		DC control	
	Motor output	kW	0.074+0.074	
	External static press.		0	
Compressor	Type × Quantity		Scroll hermetic compressor × 1	
	Manufacture		Mitsubishi Electric Corporation	
	Starting method		Inverter	
	Capacity control	%	Cooling 29 to 100 Heating 24 to 100	Cooling 23 to 100 Heating 22 to 100
	Motor output	kW	2.8	3.3
	Case heater	kW	0	
	Lubricant		FV50S (2.3 liter)	
External finish			Galvanized Steel Sheet Munsell No. 3Y 7.8/1.1	
External dimension H×W×D		mm	1,338 × 1,050 × 330(+25)	
		inch	52-11/16 × 41-11/32 × 13 (+1)	
Protection devices	High pressure protection		High pressure Switch, High pressure Sensor	
	Inverter circuit (COMP./FAN)		Overcurrent detection, Overheat detection(Heat sink thermistor)	
	Compressor		Compressor thermistor, Overcurrent detection	
	Fan motor		Overheating, Voltage protection	
Refrigerant	Type × original charge		R410A 4.8kg	
	Control		Electronic expansion valve	
Net weight		kg (lb)	122 (269)	
Heat exchanger			Cross Fin and Copper tube	
HIC circuit (HIC: Heat Inter-Changer)			HIC circuit	
Defrosting method			Reversed refrigerant circuit	
Drawing	External		BK01V261	
	Wiring		BH78B813	
Standard attachment	Document		Installation Manual	
	Accessory		Grounded lead wire × 2, conduit plate	
Optional parts			Joint: CMY-Y62-G-E Header: CMY-Y64/68-G-E	

Remarks

*1 Nominal cooling conditions

Indoor :	80.0°F D.B/67.0°F W.B. [26.7°C D.B. /19.4°C W.B.]
Outdoor :	95.0°F D.B./75.0°F W.B. [35.0°C D.B. /23.9°C W.B.]
Pipe length :	25 ft [7.6 m]
Level difference :	0 ft [0 m]

*2 Nominal heating conditions

	70.0°F D.B./60.0°F W.B. [21.1°C D.B./15.6°C W.B.]
	47.0°F D.B./43.0°F W.B. [8.3°C D.B./6.1°C W.B.]
	25 ft [7.6 m]
	0 ft [0 m]

*3 50 to 115°F [10 to 46°C] D.B. : When connecting PKFY-P06NBMU, PKFY-P08NHMU, PFFY-P06/08/12NEMU, and PFFY-P06/08/12NRMU type indoor unit.

*4 5 to 115°F [−15 to 46°C] D.B.: When using an optional air protect guide [PAC-SH95AG-E]. However, this condition does not apply to the indoor units listed in *3.

Note : Due to continuing improvement, above specifications may be subject to change without notice.

4-1. SELECTION OF COOLING/HEATING UNITS

How to determine the capacity when less than or equal 100% indoor model size units are connected in total:

The purpose of this flow chart is to select the indoor and outdoor units. For other purposes, this flow chart is intended only for reference.

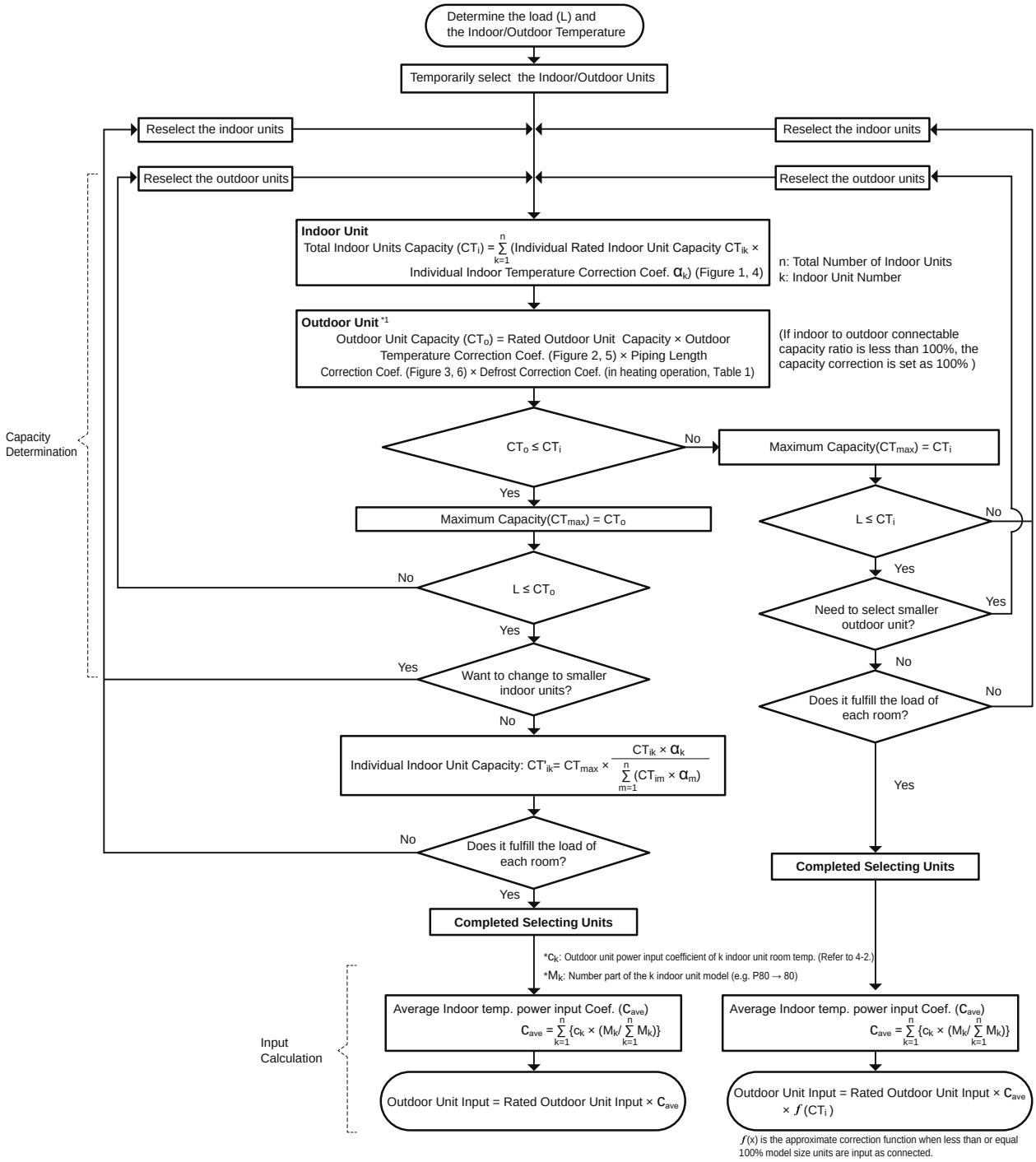

How to determine the capacity when greater than 100% indoor model size units are connected in total:

The purpose of this flow chart is to select the indoor and outdoor units. For other purposes, this flow chart is intended only for reference.

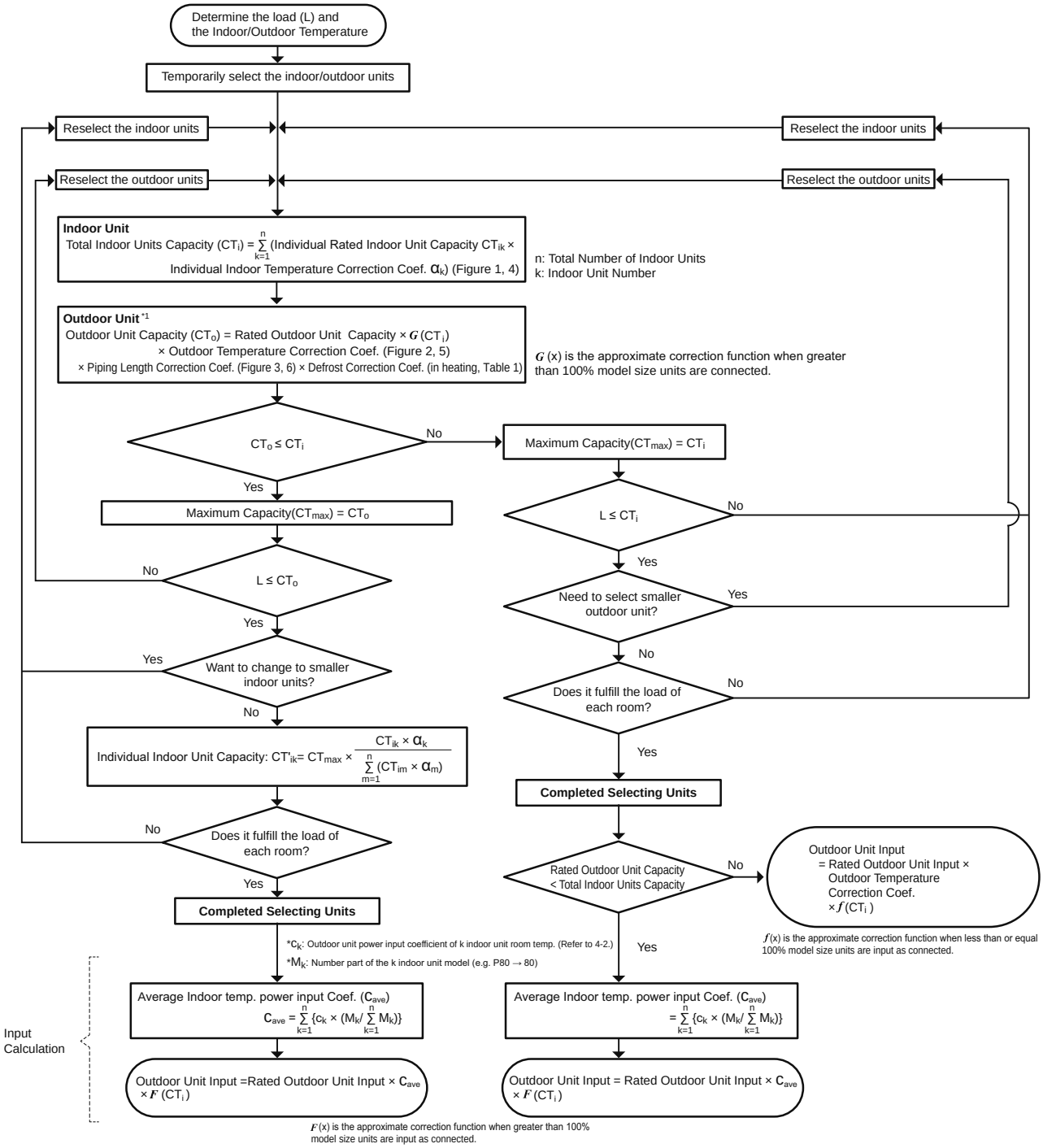

<Cooling>

Design Condition	
Outdoor Design Dry Bulb Temperature	**98.6ºF (37.0ºC)**
Total Cooling Load	**30.3 kBTU/h**
Room1	
Indoor Design Dry Bulb Temperature	**80.6ºF (27.0ºC)**
Indoor Design Wet Bulb Temperature	**68.0ºF (20.0ºC)**
Cooling Load	**13.6 kBTU/h**
Room2	
Indoor Design Dry Bulb Temperature	**75.2ºF (24.0ºC)**
Indoor Design Wet Bulb Temperature	**66.2ºF (19.0ºC)**
Cooling Load	**16.7 kBTU/h**
<Other>	
Indoor/Outdoor Equivalent Piping Length	**250 ft**

Capacity of indoor unit

Model Number for indoor unit	Model 05	Model 06	Model 08	Model 12	Model 15	Model 18	Model 24	Model 27	Model 30	Model 36	Model 48	Model 54
Model Capacity	5.0	6.0	8.0	12.0	15.0	18.0	24.0	27.0	30.0	36.0	48.0	54.0

1. Cooling Calculation

(1) Temporary Selection of Indoor Units

Room1

PEFY-P15 **15.0 kBTU/h (Rated)**

Room2

PEFY-P18 **18.0 kBTU/h (Rated)**

(2) Total Indoor Units Capacity

P15+ P18 = P33

(3) Selection of Outdoor Unit

The P36 outdoor unit is selected as total indoor units capacity is P33

PUMY-P36 **36.0 kBTU/h**

(4) Total Indoor Units Capacity Correction Calculation

Room1

Indoor Design Wet Bulb Temperature Correction (68.0ºF) 1.02 (Refer to Figure 1)

Room2

Indoor Design Wet Bulb Temperature Correction (66.2ºF) 0.95 (Refer to Figure 1)

Total Indoor Units Capacity (CTi)

CTi = Σ (Indoor Unit Rating × Indoor Design Temperature Correction)

= 15.0 × 1.02 + 18.0 × 0.95

= 32.4 kBTU/h

(5) Outdoor Unit Correction Calculation

Outdoor Design Dry Bulb Temperature Correction (98.6ºF) 0.98 (Refer to Figure 2)

Piping Length Correction (250 ft) 0.93 (Refer to Figure 3)

Total Outdoor Unit Capacity (CTo)

CTo = Outdoor Rating × Outdoor Design Temperature Correction × Piping Length Correction

= 36.0 × 0.98 × 0.93

= 32.8 kBTU/h

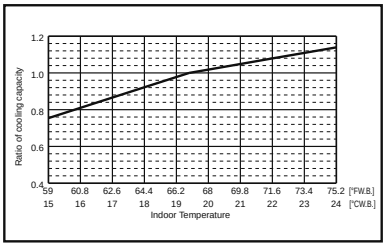

Figure 1 **Indoor unit temperature correction**
To be used to correct indoor unit only

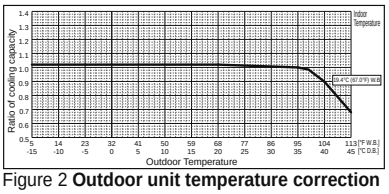

Figure 2 **Outdoor unit temperature correction**
To be used to correct outdoor unit only

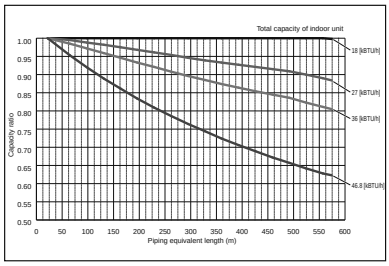

Figure 3 **Correction of refrigerant piping length**

(6) Determination of Maximum System Capacity

Comparison of Capacity between Total Indoor Units Capacity (CTi) and Total Outdoor Unit Capacity (CTo)

CTi = 32.4 < CTo = 32.8, thus, select CTi.

CTx = CTi = 32.4 kBTU/h

(7) Comparison with Essential Load

Against the essential load 30.3 kBTU/h, the maximum system capacity is 32.4 kBTU/h: Proper outdoor units have been selected.

(8) Calculation of Maximum Indoor Unit Capacity of Each Room

CTx = CTi, thus, calculate by the calculation below

Room1

Indoor Unit Rating × Indoor Design Temperature Correction

= 15.0 × 1.02

= 15.3 kBTU/h **OK: fulfills the load 13.6 kBTU/h**

Room2

Indoor Unit Rating × Indoor Design Temperature Correction

= 18.0 × 0.95

= 17.1 kBTU/h **OK: fulfills the load 16.7 kBTU/h**

Go on to the heating trial calculation since the selected units fulfill the cooling loads of Room 1, 2.

<Heating>

Design Condition	
Outdoor Design Wet Bulb Temperature	**35.6ºF (2.0ºC)**
Total Heating Load	**34.4 kBTU/h**
Room1	
Indoor Design Dry Bulb Temperature	**69.8ºF (21.0ºC)**
Heating Load	**16.3 kBTU/h**
Room2	
Indoor Design Dry Bulb Temperature	**73.4ºF (23.0ºC)**
Heating Load	**18.1 kBTU/h**
<Other>	
Indoor/Outdoor Equivalent Piping Length	**328 ft**

Capacity of indoor unit

Model Number for indoor unit	Model 05	Model 06	Model 08	Model 12	Model 15	Model 18	Model 24	Model 27	Model 30	Model 36	Model 48	Model 54
Model Capacity	5.6	6.7	9.0	13.5	17.0	20.0	27.0	30.0	34.0	40.0	54.0	60.0

2. Heating Calculation

(1) Temporary Selection of Indoor Units

Room1

PEFY-P15 **17.0 kBUT/h (Rated)**

Room2

PEFY-P18 **20.0 kBUT/h (Rated)**

(2) Total Indoor Units Capacity

P15 + P18 = P33

(3) Selection of Outdoor Unit

The P36 outdoor unit is selected as total indoor units capacity is P33

PUMY-P36 **42.0 kBUT/h**

(4) Total Indoor Units Capacity Correction Calculation

Room1

Indoor Design Dry Bulb Temperature Correction (69.8ºF) 1.00 (Refer to Figure 4)

Room2

Indoor Design Dry Bulb Temperature Correction (73.4ºF) 0.92 (Refer to Figure 4)

Total Indoor Units Capacity (CTi)

CTi = Σ (Indoor Unit Rating × Indoor Design Temperature Correction)

= 17.0 × 1.00 + 20.0 × 0.92

= 35.4 kBTU/h

(5) Outdoor Unit Correction Calculation

Outdoor Design Wet Bulb Temperature Correction (35.6ºF) 1.0 (Refer to Figure 5)

Piping Length Correction (328 ft) 0.94 (Refer to Figure 6)

Defrost Correction 0.89 (Refer to Table 1)

Total Outdoor Unit Capacity (CTo)

CTo = Outdoor Unit Rating × Outdoor Design Temperature Correction × Piping Length Correction × Defrost Correction

= 42.0 × 1.0 × 0.94 × 0.89

= 35.1 kBTU/h

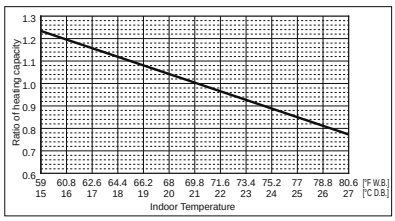

Figure 4 **Indoor unit temperature correction**
To be used to correct indoor unit only

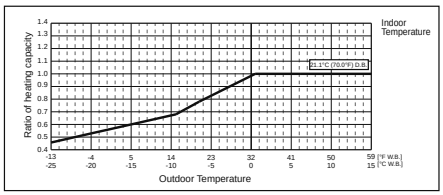

Figure 5 **Outdoor unit temperature correction**
To be used to correct outdoor unit only

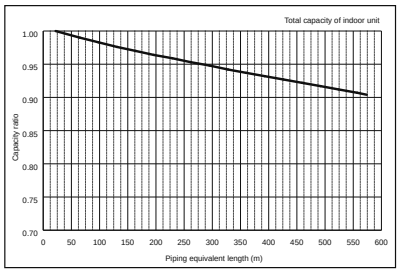

Figure 6 **Correction of refrigerant piping length**

Table 1 Table of correction factor at frost and defrost

Outdoor Intake temperature <W.B.°F (°C)>	43(6)	37(4)	36(2)	32(0)	28(−2)	25(−4)	21(−6)	18(−8)	14(−10)	5(−15)	−4(−20)	−13(−25)
Correction factor	1.0	0.98	0.89	0.88	0.89	0.9	0.95	0.95	0.95	0.95	0.95	0.95

(6) Determination of Maximum System Capacity

Comparison of Capacity between Total Indoor Units Capacity (CTi) and Total Outdoor Unit Capacity (CTo)

CTi = 35.4 > CTo = 35.1, thus, select CTo.

CTx = CTo = 35.1 kBTU/h

(7) Comparison with Essential Load

Against the essential load 34.4 kBTU/h, the maximum system capacity is 35.1 kBTU/h: Proper outdoor units have been selected.

(8) Calculation of Maximum Indoor Unit Capacity of Each Room

CTx = CTo, thus, calculate by the calculation below

Room1

Maximum Capacity × Room1 Capacity after the Temperature Correction/(Room1,2 Total Capacity after the Temperature Correction

= 35.1 × (17.0 × 1.00) / (17.0 × 1.00 + 20.0 × 0.92)

= 16.9 kBTU/h **OK: fulfills the load 16.3 kBTU/h**

Room2

Maximum Capacity × Room1 Capacity after the Temperature Correction/(Room1,2 Total Capacity after the Temperature Correction

= 35.1 × (20.0 × 0.92) / (17.0 × 1.00 + 20.0 × 0.92)

= 18.2 kBTU/h **OK: fulfills the load 18.1 kBTU/h**

Completed selecting units since the selected units fulfill the heating loads of Room 1, 2.

3. Power input of outdoor unit

Outdoor unit : PUMY-P36
Indoor unit 1 : PEFY-P15
Indoor unit 2 : PEFY-P18

<Cooling>

(1) Rated power input of outdoor unit **2.45 kW**

(2) Calculation of the average indoor temperature power input coefficient

Coefficient of the outdoor unit for indoor unit 1 (Outdoor temp. 98.6°F [37.0°C] D.B., Indoor temp. 68.0°F [20.0°C] W.B.)
1.04 (Refer to "4-2. CORRECTING BY TEMPERATURE".)

Coefficient of the outdoor unit for indoor unit 2 (Outdoor temp. 98.6°F [37.0°C] D.B., Indoor temp. 64.4°F [18.0°C] W.B.)
0.85 (Refer to "4-2. CORRECTING BY TEMPERATURE".)

Average indoor temp. power input coefficient (C_{ave}) = $\sum_{k=1}^{n} \{c_k \times (M_k / \sum_{k=1}^{n} M_k)\}$

n: Total number of the indoor units
k: Number of the indoor unit
c_k: Outdoor unit power input coefficient of k indoor unit room temp.
M_k: Number part of the k indoor unit model (e.g. P80 → 80)

= 1.04 × 15/(15 + 18) + 0.85 × 18/(15 + 18)
= 0.94

(3) Coefficient of the partial load *f* (CTi)

Total Indoor units capacity
15 + 18 = 33, thus, *f* (CTi) = 0.9 (Refer to the tables in "4-4.STANDARD CAPACITY DIAGRAM".)

(4) Outdoor power input (PIo)

Maximum System Capacity (CTx) = Total Outdoor unit Capacity (CTo), so use the following formula
PIo = Outdoor unit Cooling Rated Power Input × Correction Coefficient of Indoor temperature × *f* (CTi)
= 2.45 × 0.94 × 0.9
= 2.07 kW

<Heating>

(1) Rated power input of outdoor unit **3.10 kW**

(2) Calculation of the average indoor temperature power input coefficient

Coefficient of the outdoor unit for indoor unit 1 (Outdoor temp. 26.6°F [−3°C] W.B., Indoor temp. 70°F [21.1°C] D.B.)
1.16 (Refer to “4-2. CORRECTING BY TEMPERATURE”.)

Coefficient of the outdoor unit for indoor unit 2 (Outdoor temp. 26.6°F [−3°C] W.B., Indoor temp. 78.8°F [26°C] D.B.)
1.09 (Refer to “4-2. CORRECTING BY TEMPERATURE”.)

Average indoor temp. power input coefficient (C_{ave}) = $\sum_{k=1}^{n} \{c_k \times (M_k / \sum_{k=1}^{n} M_k)\}$

n: Total number of the indoor units
k: Number of the indoor unit
c_k: Outdoor unit power input coefficient of k indoor unit room temp.
M_k: Number part of the k indoor unit model (e.g. P80 → 80)

= 1.16 × 15/(15 + 18) + 1.09 × 18/(15 + 18)
= 1.12

(3) Coefficient of the partial load *f* (CTi)

Total indoor units capacity
15 + 18 = 33, thus, *f* (CTi) = 0.9 (Refer to the tables in “4-4. STANDARD CAPACITY TEMPERATURE”.)

(4) Outdoor power input (PIo)

Maximum System Capacity (CTx) = Total Indoor unit Capacity (CTi), so use the following formula
PIo = Outdoor unit Heating Rated Power Input × Correction Coefficient of Indoor temperature × *f* (CTi)
= 3.34 × 1.12 × 0.9
= 3.37 kW

4-2. CORRECTION BY TEMPERATURE

CITY MULTI could have varied capacity at different designing temperature. Using the nominal cooling/heating capacity value and the ratio below, the capacity can be observed at various temperature.

<Cooling>

		PUMY	
		P36	P48
Nominal cooling capacity	BTU/h	36,000	48,000
Input	kW	2.445	3.69

Figure 7 Indoor unit temperature correction
To be used to correct indoor unit capacity only

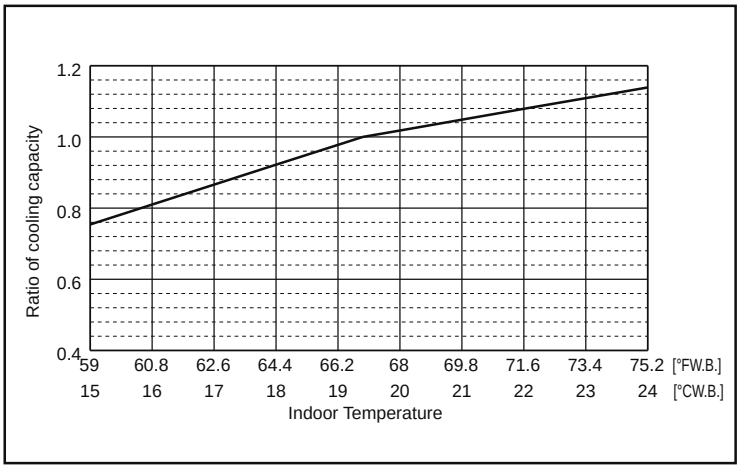

Figure 8 Outdoor unit temperature correction
To be used to correct outdoor unit capacity only

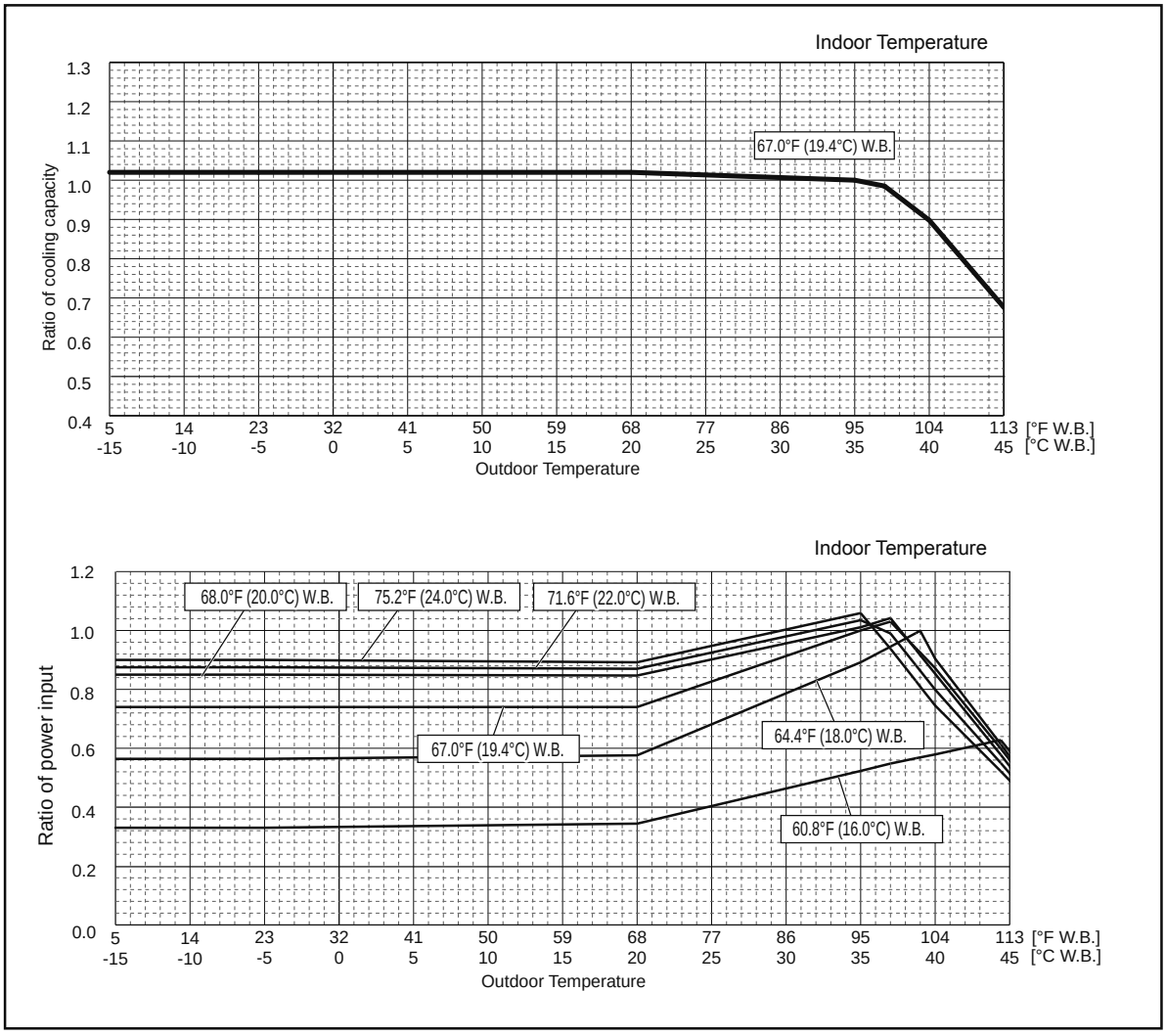

<Heating>

		PUMY	
		P36	P48
Nominal heating capacity	BTU/h	42,000	54,000
Input	kW	3.10	4.085

Figure 9 Indoor unit temperature correction
To be used to correct indoor unit capacity only

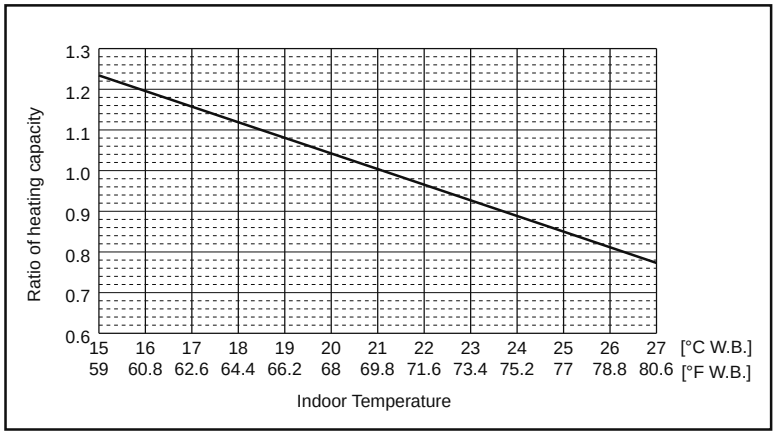

Figure 10 Outdoor unit temperature correction
To be used to correct outdoor unit capacity only

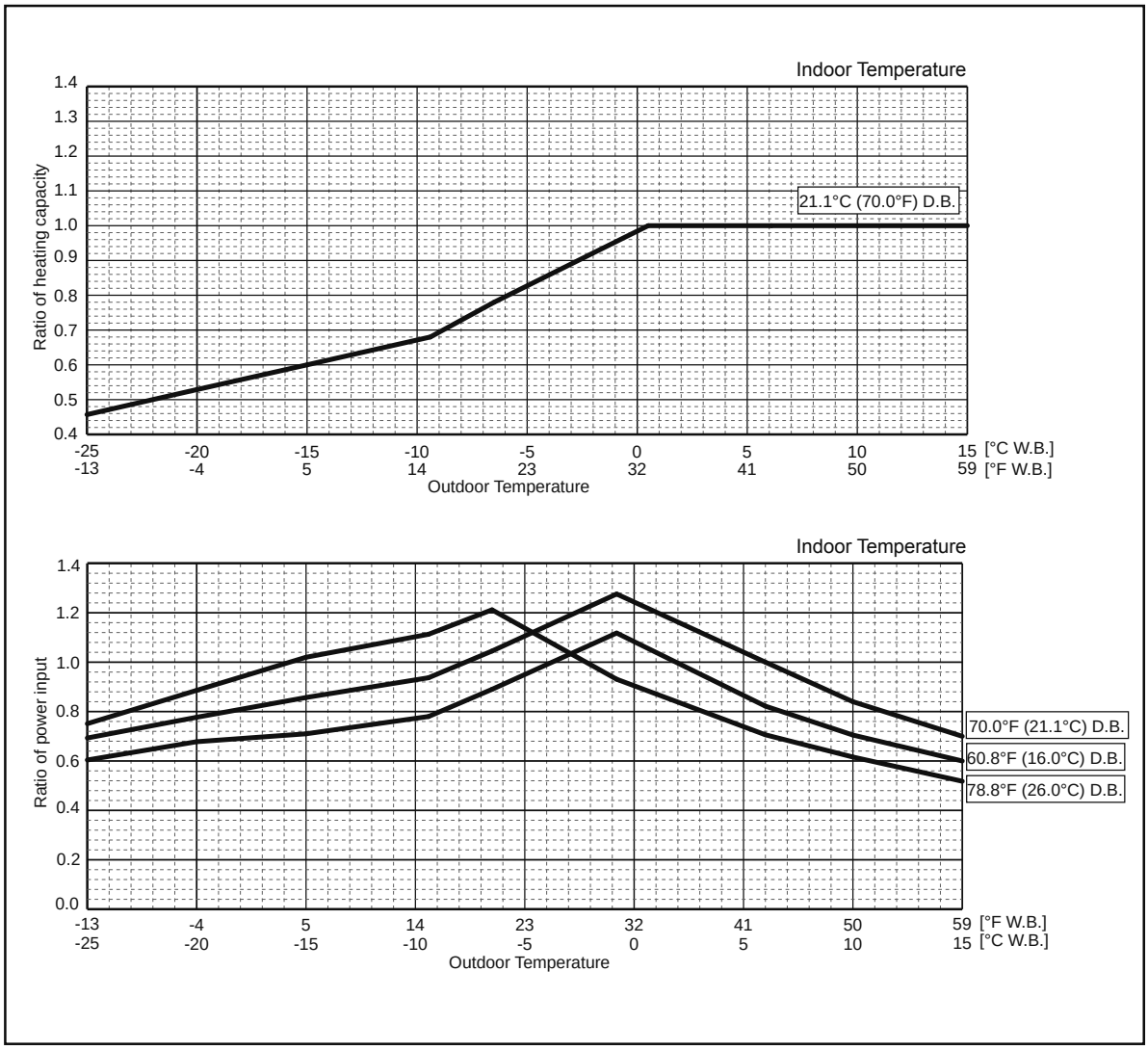

4-3. STANDARD OPERATION DATA (REFERENCE DATA)

Operation				PUMY-P36NKMU1 PUMY-P36NKMU1-BS		PUMY-P48NKMU1 PUMY-P48NKMU1-BS	
Operating conditions	Ambient temperature	Indoor	DB/WB	80°F/67°F [26.7°C / 19.4°C]	70°F/60°F [21.1°C/15.6°C]	80°F/67°F [26.7°C/19.4°C]	70°F/60°F [21.1°C/15.6°C]
		Outdoor		95°F/75°F [35.0°C/23.9°C]	47°F / 43°F [8.3°C/6.1°C]	95°F/ 75°F [35.0°C / 23.9°C]	47°F/43°F [8.3°C/6.1°C]
	Indoor unit	No. of connected units	Unit	3		4	
		No. of units in operation		3		4	
		Model	—	12 × 3		12 × 4	
	Piping	Main pipe	Ft (m)	9.84 (3)		9.84 (3)	
		Branch pipe		14.76 (4.5)		14.76 (4.5)	
		Total pipe length		54.13 (16.5)		68.90 (21)	
	Fan speed		—	Hi		Hi	
	Amount of refrigerant		LBS. OZ. (kg)	17 LBS. (7.7)		17 LBS. 3 OZ. (7.8)	
Outdoor unit	Electric current		A	10.8	13.7	16.3	18.0
	Voltage		V	230		230	
	Compressor frequency		Hz	47	66	64	80
LEV opening	Indoor unit		Pulse	268	438	247	313
Pressure	High pressure/Low pressure		PSIG [MPaG]	370/116 [2.55/0.80]	406/104 [2.80/0.72]	419/112 [2.89/0.77]	409/97 [2.82/0.67]
Temp. of each section	Outdoor unit	Discharge	°F[°C]	139.1 [59.5]	145.8 [63.2]	154.2 [67.9]	149.2 [65.1]
		Heat exchanger outlet		101.3 [38.5]	34.3 [1.3]	99.7[37.6]	32.2 [0.1]
		Accumulator inlet		49.5 [9.7]	33.4 [0.8]	47.1 [8.4]	31.3 [−0.4]
		Compressor inlet		45.3 [7.4]	33.6 [0.9]	42.4 [5.8]	32.7 [0.4]
	Indoor unit	Lev inlet		83.7 [28.7]	100.2 [37.9]	71.1 [21.7]	98.8 [37.1]
		Heat exchanger inlet		49.6 [9.8]	132.3 [55.7]	47.5 [8.6]	134.6 [57.0]

4-4. STANDARD CAPACITY DIAGRAM

Before calculating the sum of total capacity of indoor units, please convert the value into the kW model capacity following the formula on "4-1-1. Method for obtaining system cooling and heating capacity".

4-4-1. PUMY-P36NKMU1(-BS) <cooling>

		PUMY
		P36
Nominal cooling capacity	BTU/h	36,000
Input	kW	2.45
Current (208V)	A	11.9
Current (230V)	A	10.8

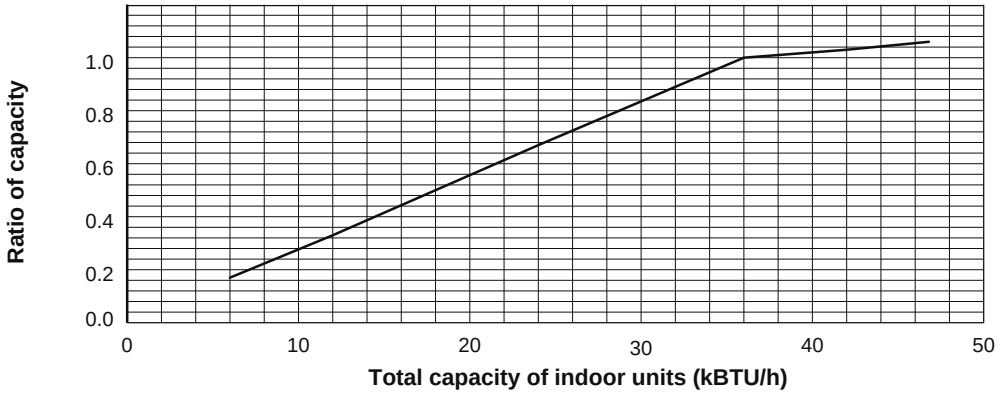

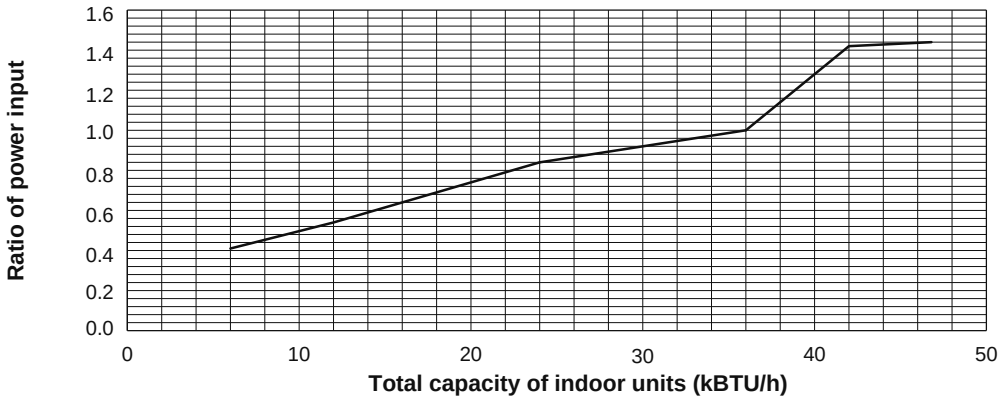

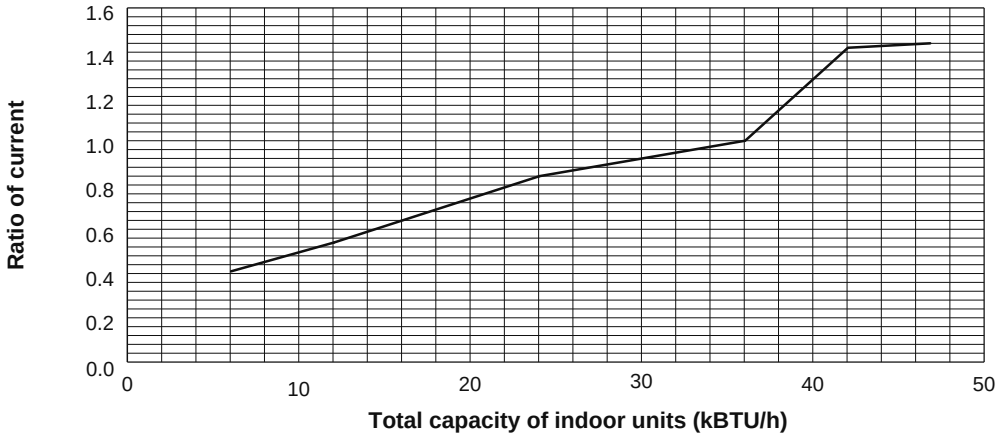

208, 230 V

4-4-2. PUMY-P36NKMU1(-BS) <heating>

		PUMY
		P36
Nominal cooling capacity	BTU/h	42,000
Input	kW	3.10
Current (208V)	A	15.1
Current (230V)	A	13.7

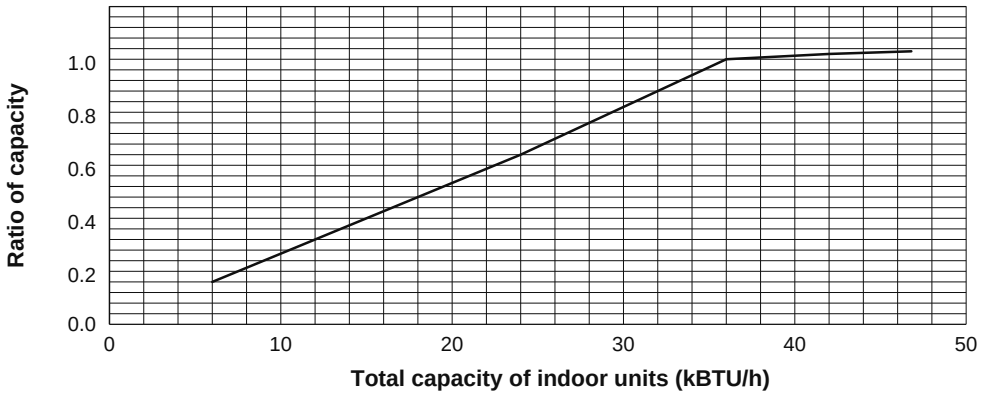

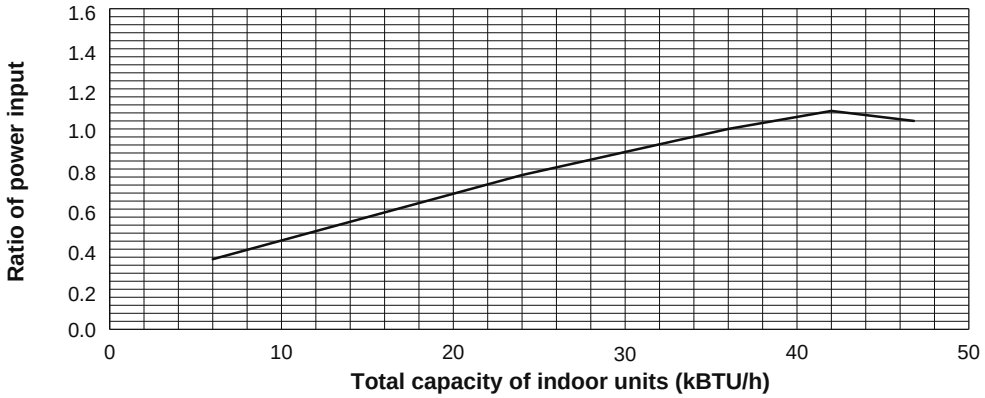

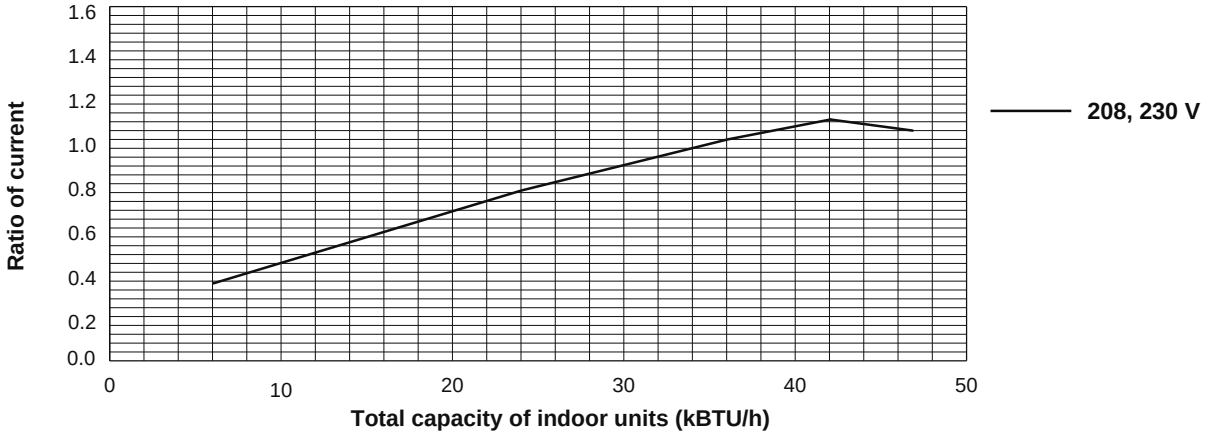

4-4-3. PUMY-P48NKMU1(-BS) <cooling>

		PUMY
		P48
Nominal cooling capacity	BTU/h	48,000
Input	kW	3.69
Current (208V)	A	18.0
Current (230V)	A	16.3

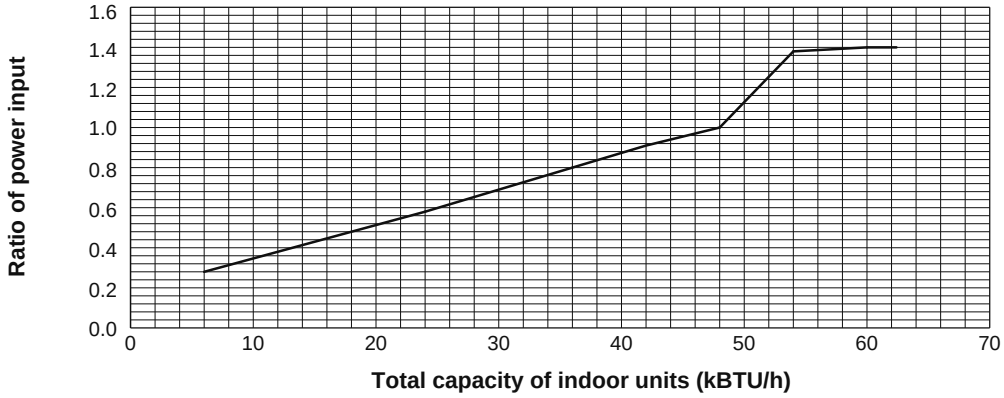

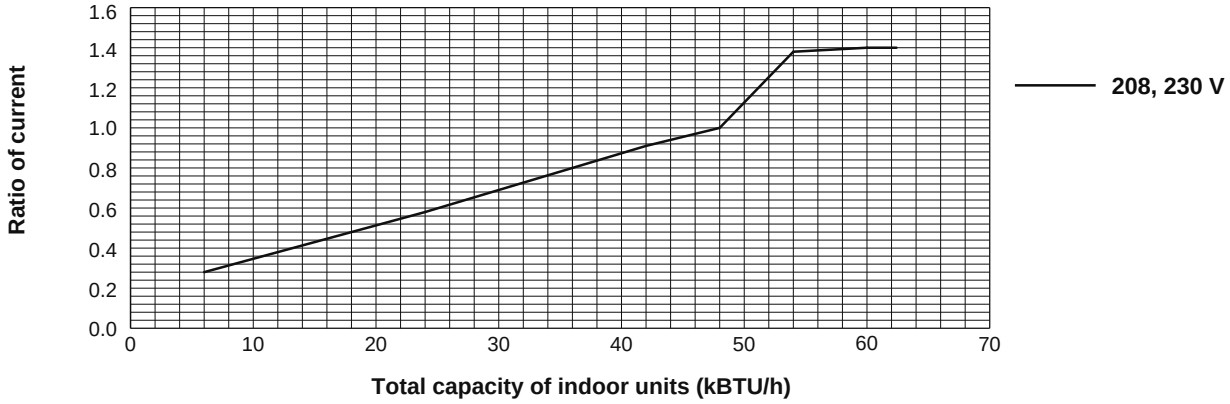

4-4-4. PUMY-P48NKMU1(-BS) <heating>

		PUMY
		P48
Nominal cooling capacity	BTU/h	54,000
Input	kW	4.04
Current (208V)	A	19.9
Current (230V)	A	18.0

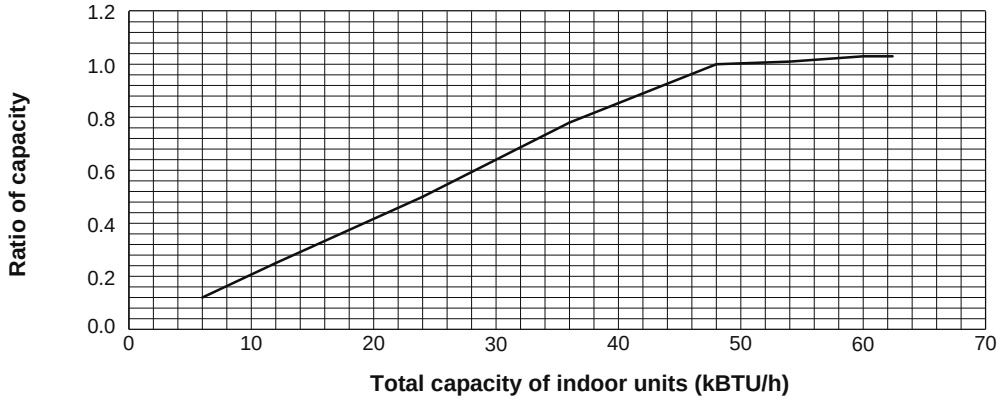

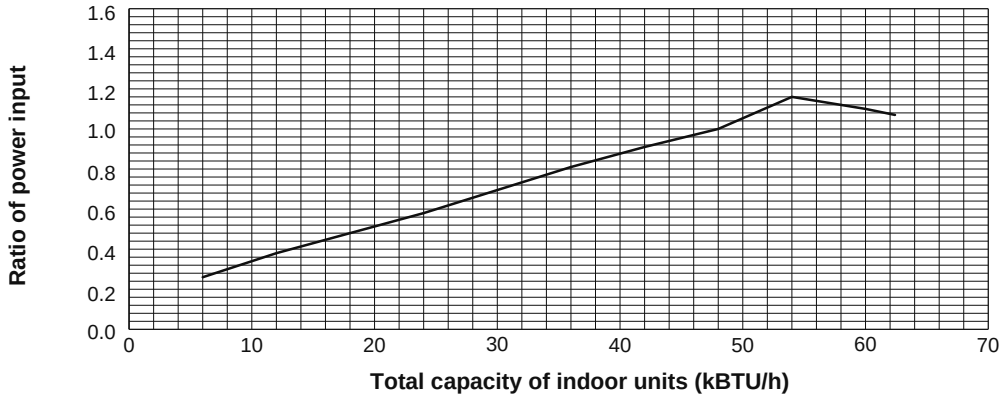

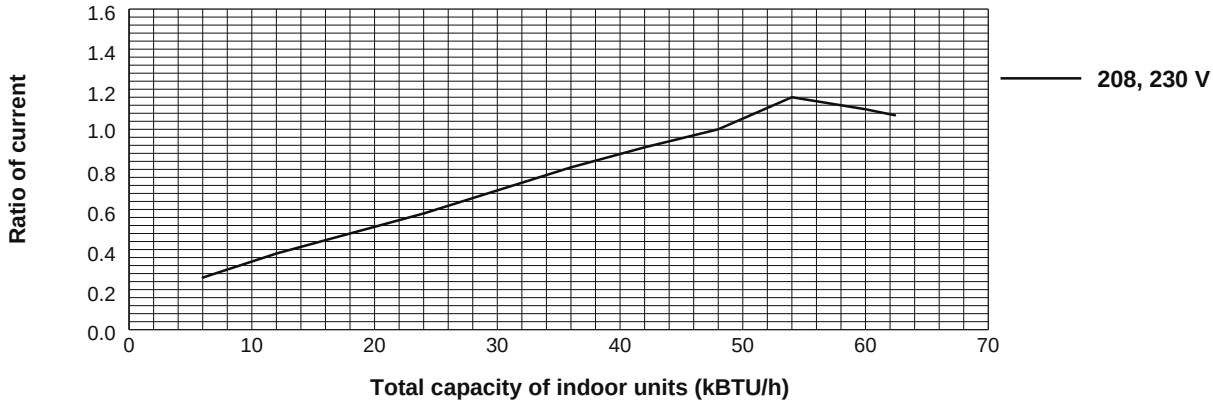

4-5. CORRECTING CAPACITY FOR CHANGES IN THE LENGTH OF REFRIGERANT PIPING

(1) During cooling, obtain the ratio (and the equivalent piping length) of the outdoor units rated capacity and the total in-use indoor capacity, and find the capacity ratio corresponding to the standard piping length from Figure 11 to 13. Then multiply by the cooling capacity from Figure 7 and 8 in "4-2. CORRECTION BY TEMPERATURE" to obtain the actual capacity.

(2) During heating, find the equivalent piping length, and find the capacity ratio corresponding to standard piping length from Figure 13. Then multiply by the heating capacity from Figure 9 and 10 in "4-2. CORRECTION BY TEMPERATURE" to obtain the actual capacity.

(1) Capacity Correction Curve

Figure 11 PUMY-P36NKMU1(-BS) <Cooling>

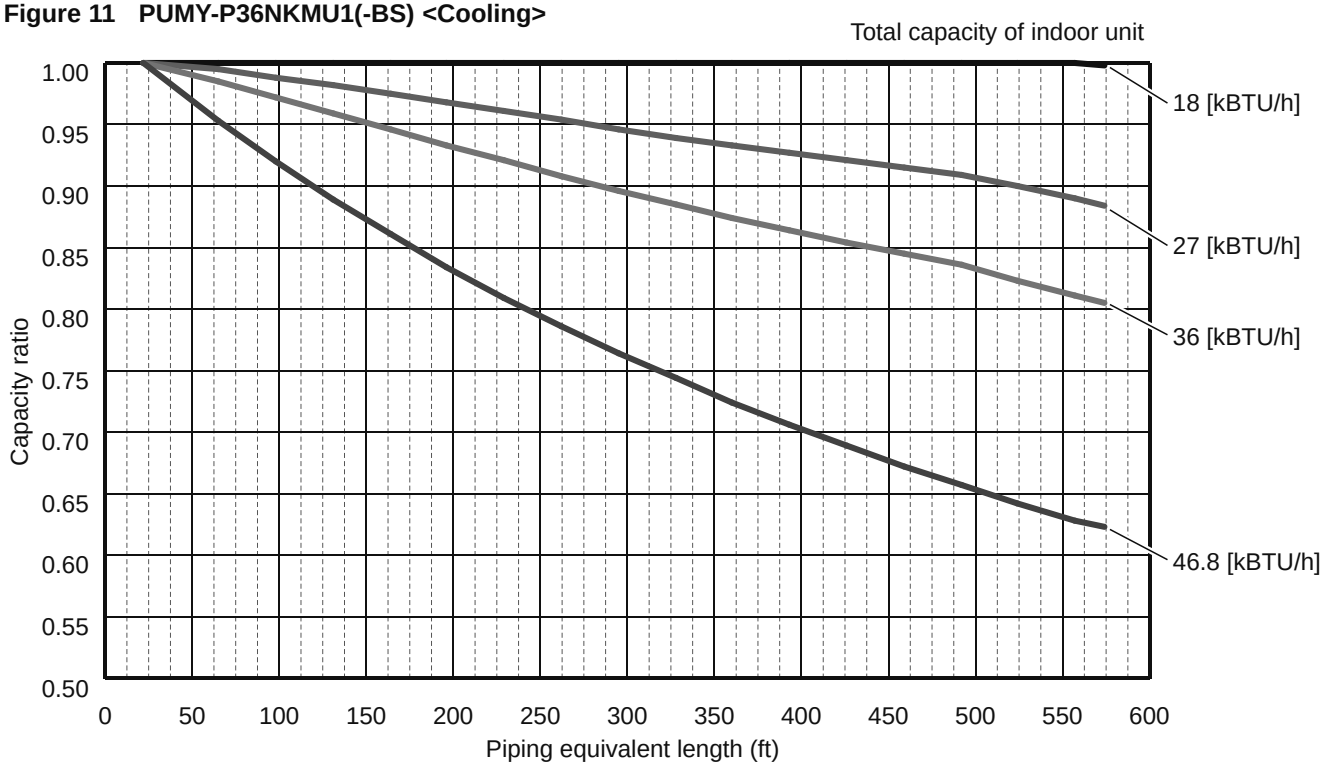

Figure 12 PUMY-P48NKMU1(-BS) <Cooling>

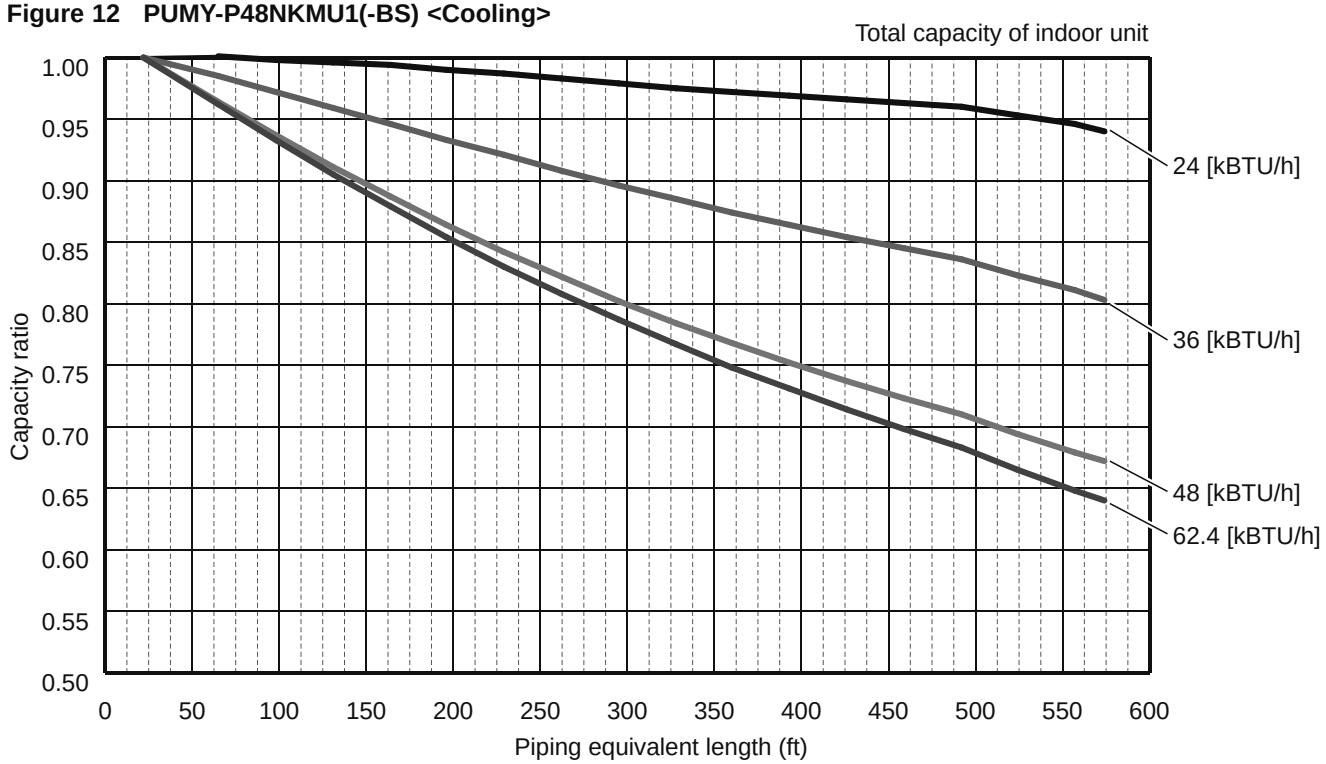

Figure 13 PUMY-P36/48NKMU1(-BS) <Heating>

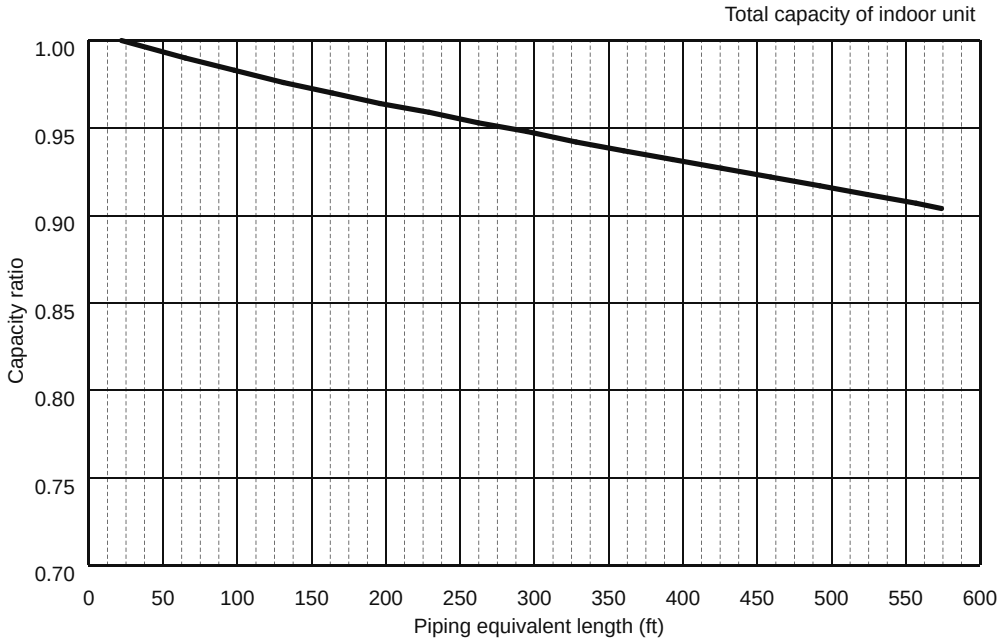

(2) Method for Obtaining the Equivalent Piping Length

Equivalent length for type P36·48 = (length of piping to farthest indoor unit) + (0.3 × number of bends in the piping) (m)
Length of piping to farthest indoor unit: type P36·48.....150 m

4-5-1. Correction of Heating Capacity for Frost and Defrosting

If heating capacity has been reduced due to frost formation or defrosting, multiply the capacity by the appropriate correction factor from the following table to obtain the actual heating capacity.

Correction factor diagram

Outdoor Intake temperature <W.B.°F (°C)>	43(6)	37(4)	36(2)	32(0)	28(−2)	25(−4)	21(−6)	18(−8)	14(−10)	5(−15)	−4(−20)	−13(−25)
Correction factor	1.0	0.98	0.89	0.88	0.89	0.9	0.95	0.95	0.95	0.95	0.95	0.95

4-6. NOISE CRITERION CURVES

PUMY-P36NKMU1
PUMY-P36NKMU1-BS

MODE	SPL(dB)	LINE
COOLING	49	○——○
HEATING	53	●——●

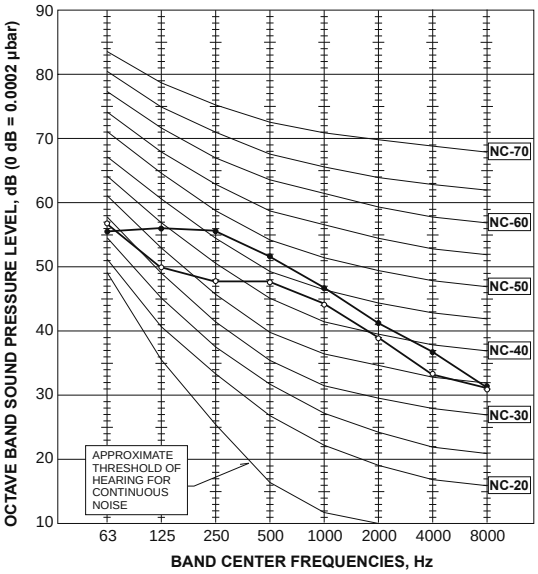

PUMY-P48NKMU1
PUMY-P48NKMU1-BS

MODE	SPL(dB)	LINE
COOLING	51	○——○
HEATING	54	●——●

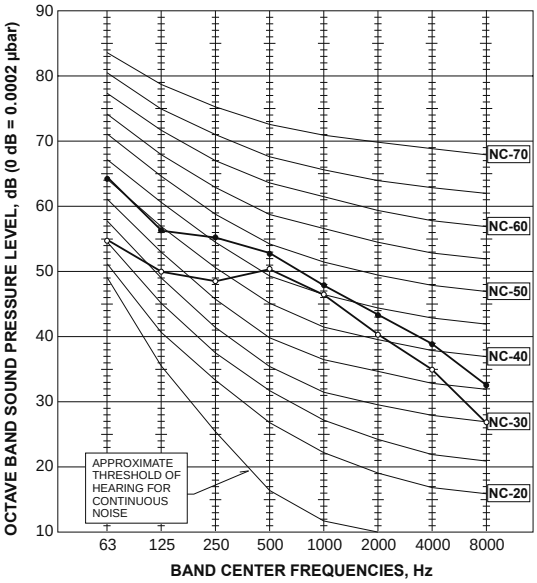

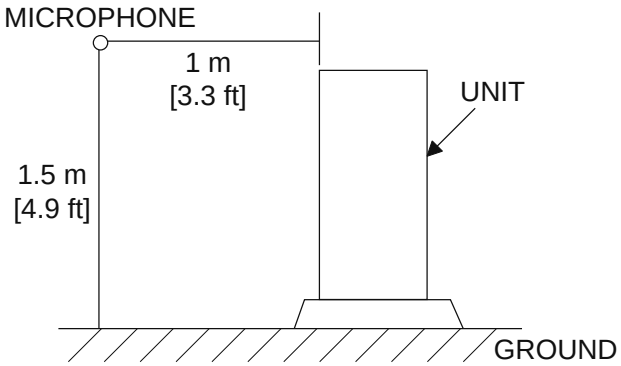

5 OUTLINES AND DIMENSIONS

PUMY-P36NKMU1 **PUMY-P48NKMU1**
PUMY-P36NKMU1-BS **PUMY-P48NKMU1-BS**

Unit: mm
<inch>

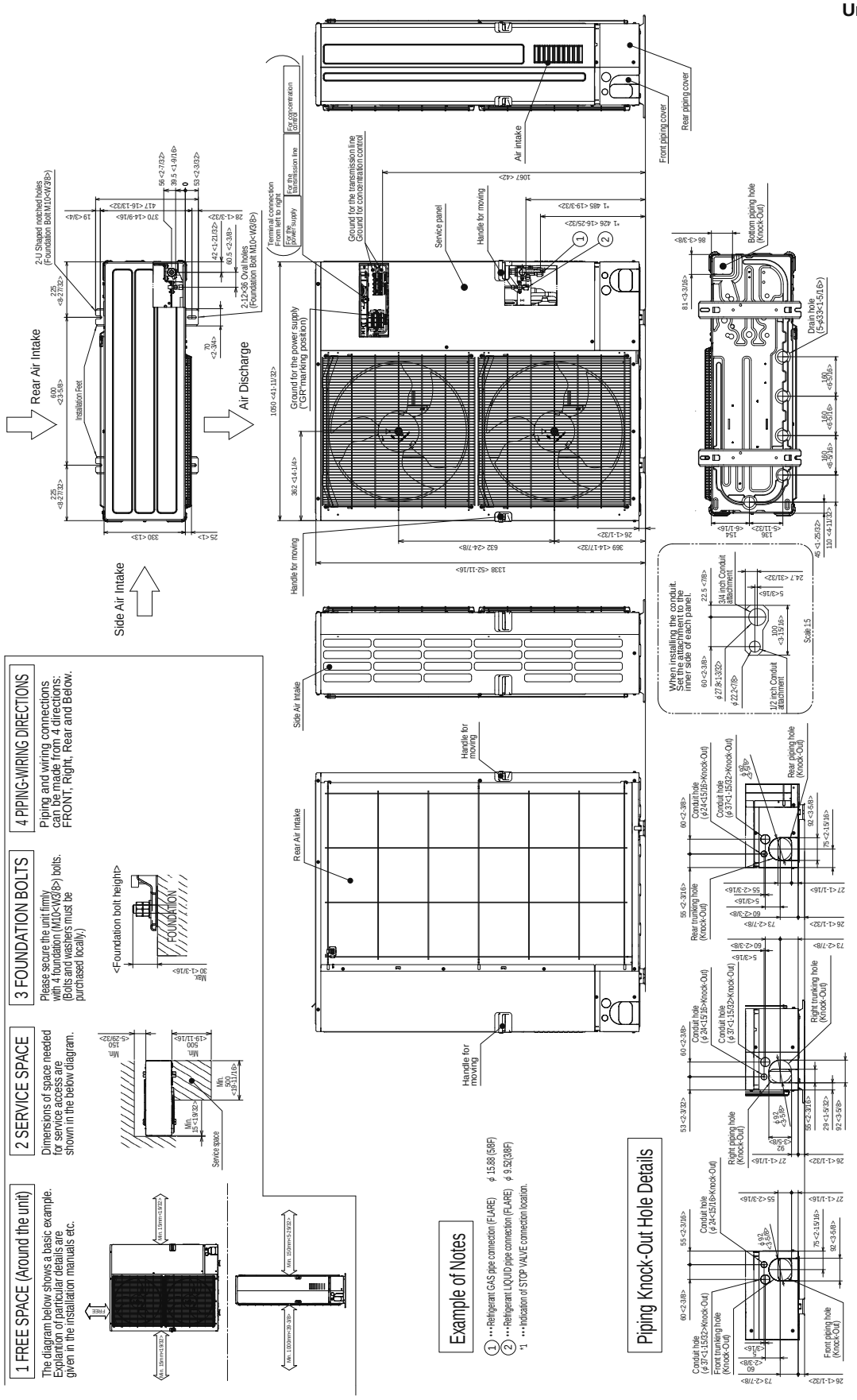

6 WIRING DIAGRAM

PUMY-P36NKMU1 **PUMY-P48NKMU1**
PUMY-P36NKMU1-BS **PUMY-P48NKMU1-BS**

SYMBOL	NAME
TB1	Terminal Block 〈Power Supply〉
TB3	Terminal Block 〈Indoor/Outdoor Transmission Line〉
TB7	Terminal Block 〈Centralized Control Transmission Line〉
MC	Motor For Compressor
MF1,MF2	Fan Motor
21S4	Solenoid Valve Coil 〈4-Way Valve〉
63H	High Pressure Switch
63HS	High Pressure Sensor
63LS	Low Pressure Sensor
SV1	Solenoid Valve Coil 〈Bypass Valve〉
TH2	Thermistor 〈Hic Pipe〉
TH3	Thermistor 〈Outdoor Liquid Pipe〉
TH4	Thermistor 〈Compressor〉
TH6	Thermistor 〈Suction Pipe〉
TH7	Thermistor 〈Ambient〉
TH8	Thermistor 〈Heat Sink〉
LEV-A,LEV-B	Linear Expansion Valve
DCL	Reactor
P.B.	Power Circuit Board
U/V/W	Connection Terminal 〈U/V/W-Phase〉
LI	Connection Terminal 〈L-Phase〉
NI	Connection Terminal 〈N-Phase〉
DCL1,DCL2	Connection Terminal 〈Reactor〉
IGBT	Power Module
EI,E2,E3,E4	ConnectionTerminal 〈Electrical Parts Box〉
MULTI.B.	Multi Controller Circuit Board
SW1	Switch 〈Display Selection〉
SW2	Switch 〈Function Selection〉
SW3	Switch 〈Test Run〉
SW4	Switch 〈Model Selection〉
SW5	Switch 〈Function Selection〉
SW6	Switch 〈Function Selection〉
SW7	Switch 〈Function Selection〉
SW8	Switch 〈Model Selection〉
SW9	Switch 〈Function Selection〉
SWU1	Switch 〈Unit Address Selection, ones digit〉
SWU2	Switch 〈Unit Address Selection, tens digit〉
CNS1	Connector 〈Indoor/Outdoor Transmission Line〉
CNS2	Connector 〈Centralized Control Transmission Line〉
SS	Connector 〈Connection For Option〉
CN3D	Connector 〈Connection For Option〉
CN3S	Connector 〈Connection For Option〉
CN3N	Connector 〈Connection For Option〉
CN51	Connector 〈Connection For Option〉
LED1,LED2	LED 〈Operation Inspection Display〉
LED3	LED 〈Power Supply to Main Microcomputer〉
F1,F2	Fuse 〈UL6.3A250V〉
X501～505	Relay
M-NET P.B.	M-NET Power Circuit Board
TB1	ConnectionTerminal 〈Electrical Parts Box〉

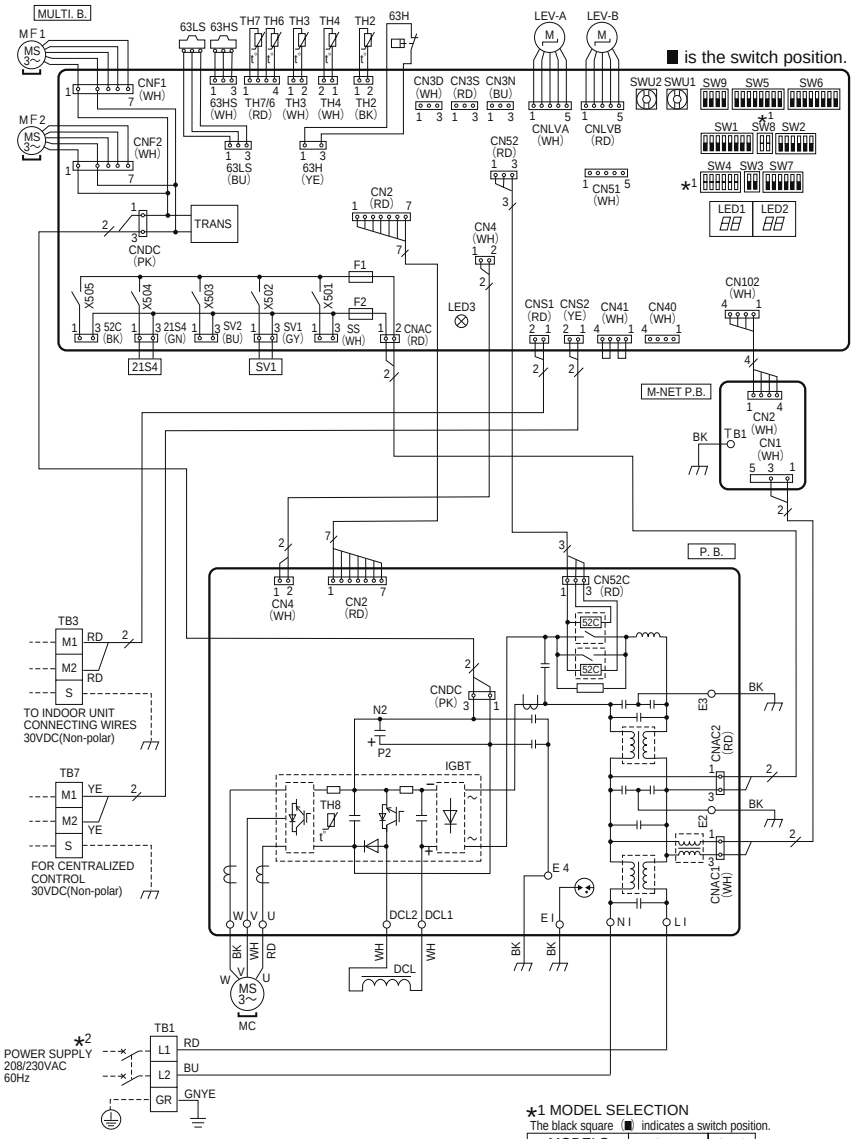

Cautions when Servicing

- ⚠ WARNING: When the main supply is turned off, the voltage [340 V] in the main capacitor will drop to 20 V in approx. 2 minutes (input voltage: 230 V). When servicing, make sure that LED1, LED2 on the outdoor multi controller circuit board goes out, and then wait for at least 1 minute.
- Components other than the outdoor circuit boards may be faulty: Check and take corrective action, referring to the service manual. Do not replace the outdoor circuit boards without checking.

*1 MODEL SELECTION
The black square (■) indicates a switch position.

MODELS	SW4	SW8
PUMY-P36NKMU1	ON OFF 1 2 3 4 5 6	ON OFF 1 2
PUMY-P48NKMU1	ON OFF 1 2 3 4 5 6	ON OFF 1 2

*2 Use copper supply wires.
Utilisez des fils d' slimentation en cuivre.

NOTES:
1.Refer to the wiring diagrams of the indoor units for details on wiring of each indoor unit.
2.Self-diagnosis function
The indoor and outdoor units can be diagnosed automatically using the self-diagnosis switch (SW1) and LED indication (LED1, LED2) found on the outdoor multi controller circuit board.
LED indication : Set all contacts of SW1 to OFF.

- During normal operation
The LED indicates the drive state of outdoor unit.

Bit	1	2	3	4	5	6	7	8
Indication	Compressor operated	52C	21S4	SV1	(SV2)	—	—	Always lit

- When fault requiring inspection has occurred
The LED alternately indicates the check code and the address of the unit in which the fault has occurred.

〔Example〕
When the compressor and SV1 are on during cooling operation.

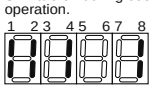

7-1. TRANSMISSION SYSTEM SETUP

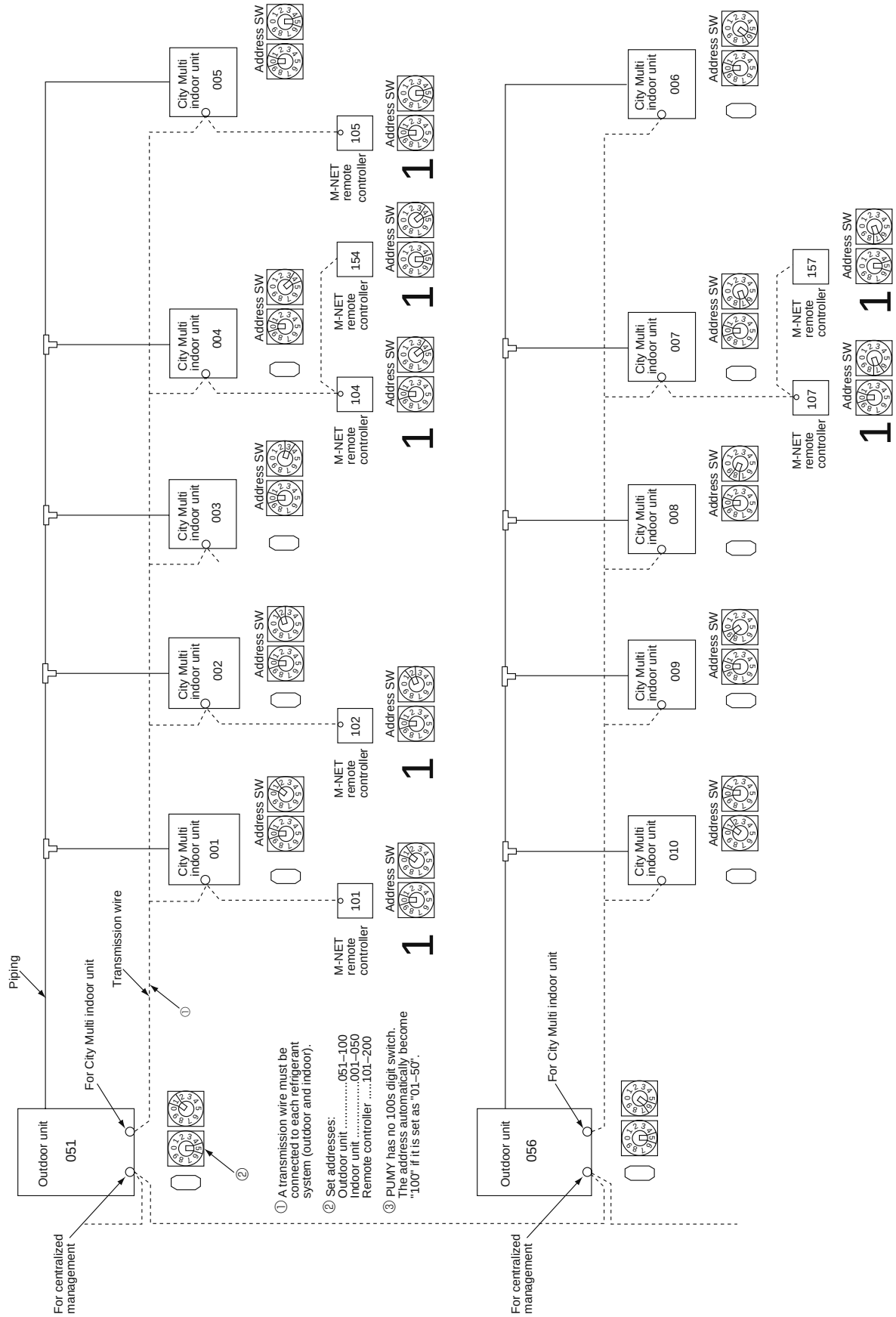

7-2. Special Function Operation and Settings for M-NET Remote Controller

For the detailed procedure of "group settings" and "paired settings", refer to the remote controller's manuals.

7-3. REFRIGERANT SYSTEM DIAGRAM

PUMY-P36NKMU1 **PUMY-P48NKMU1**
PUMY-P36NKMU1-BS **PUMY-P48NKMU1-BS**

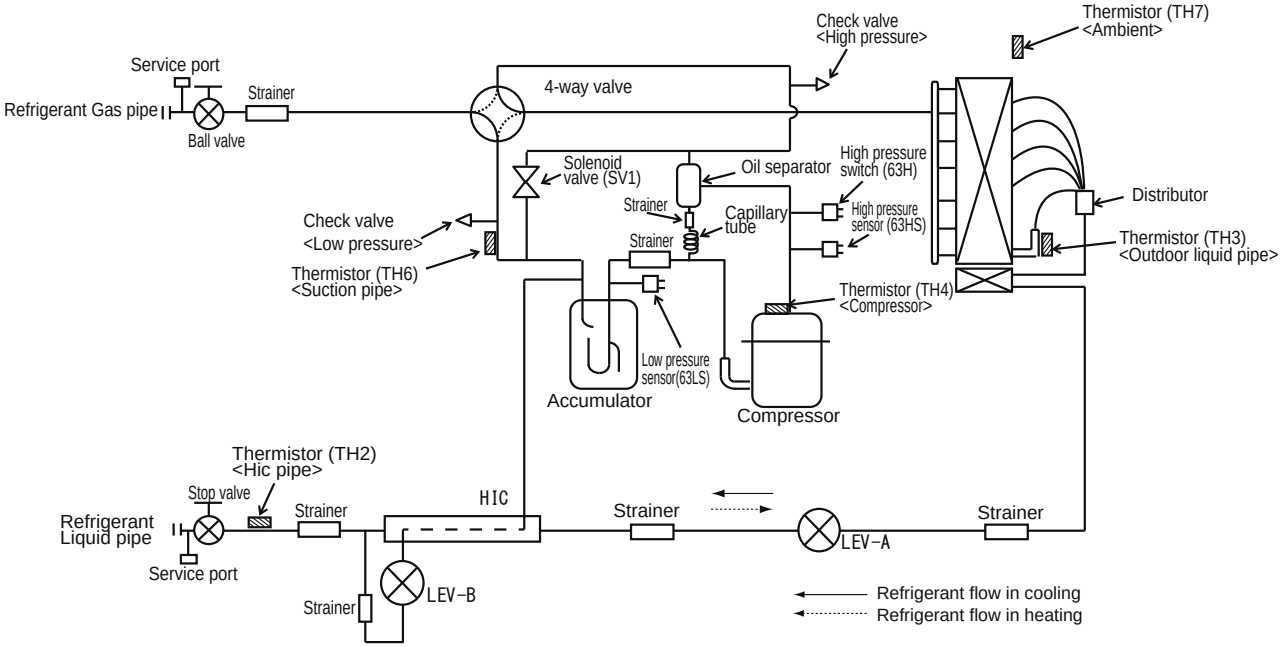

Capillary tube for oil separator : ϕ2.5 × ϕ0.8 × L1000

Refrigerant piping specifications <dimensions of flared connector>

Unit: inch <mm>

Capacity \ Item		Liquid piping	Gas piping
Indoor unit	P06, P08, P12, P15, P18	1/4 <ϕ6.35>	1/2 <ϕ12.7>
	P24, P27, P36, P48, P54	3/8 <ϕ9.52>	5/8 <ϕ15.88>
Outdoor unit	P36, P48	3/8 <ϕ9.52>	5/8 <ϕ15.88>

7-4. SYSTEM CONTROL

7-4-1. Example for the System

• Example for wiring control cables, wiring method and address setting, permissible lengths, and the prohibited items are listed in the standard system with detailed explanation.

A. Example of a M-NET remote controller system (address setting is necessary.)

Example of wiring control cables	Wiring Method and Address Setting

1. Standard operation

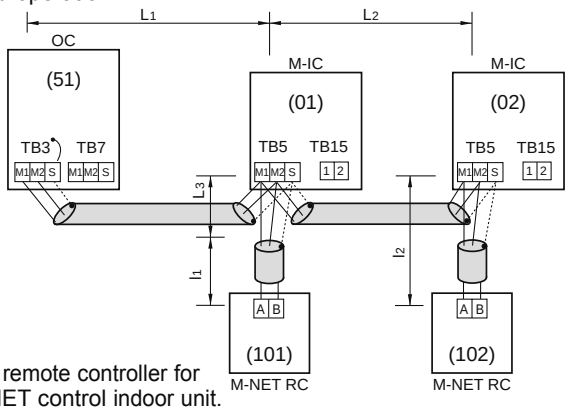

• 1 M-NET remote controller for each M-NET control indoor unit.
• There is no need for setting the 100 position on the M-NET remote controller.

a. Use feed wiring to connect terminals M1 and M2 on transmission cable block (TB3) for the outdoor unit (OC) to terminals M1 and M2 on the transmission cable block (TB5) of each M-NET control indoor unit (M-IC). Use non-polarized 2-core wire.
b. Connect terminals M1 and M2 on transmission cable terminal block (TB5) for each indoor unit with the terminal block (TB6) for M-NET the remote controller (M-NET RC).
c. Set the address setting switch (on outdoor unit P.C.B) as shown below.

Unit	Range	Setting Method
M-NET control indoor unit (M-IC)	001 to 050	—
Outdoor unit (OC)	051 to 100	Use the smallest address of all the indoor unit plus 50.
M-NET Remote controller (M-NET RC)	101 to 150	Indoor unit address plus 100

2. Operation using 2 M-NET remote controllers

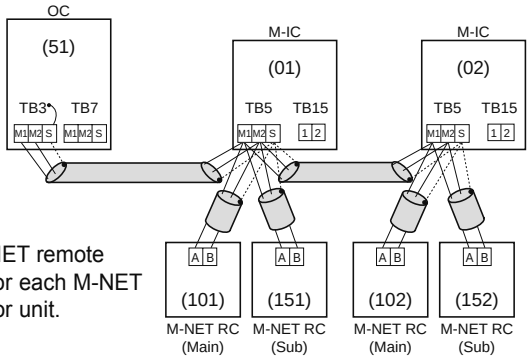

• Using 2 M-NET remote controllers for each M-NET control indoor unit.

a. Same as above a
b. Same as above b
c. Set address switch (on outdoor unit P.C.B) as shown below.

Unit	Range	Setting Method
M-NET control indoor unit (M-IC)	001 to 050	—
Outdoor unit (OC)	051 to 100	Use the smallest address of all the indoor units plus 50.
Main M-NET Remote Controller (M-NET RC)	101 to 150	Indoor unit address plus 100
Sub M-NET Remote Controller (M-NET RC)	151 to 200	Indoor unit address plus 150

3. Group operation

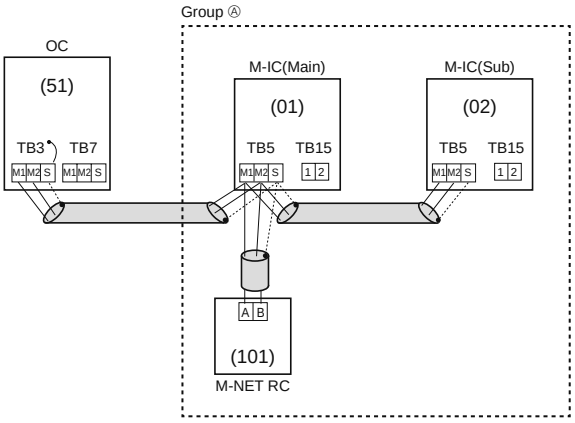

• Multiple M-NET control indoor units operated together by 1 M-NET remote controller

a. Same as above a
b. In the case of group operation using MA remote controller (MA-RC), connect terminals 1 and 2 on transmission cable terminal block (TB15) of each M-NET control indoor unit.
c. Set the address setting switch (on outdoor unit P.C.B) as shown below.

Unit	Range	Setting Method
M-IC (Main)	001 to 050	Use the smallest address within the same group of M-NET control indoor units.
M-IC (Sub)	001 to 050	Use an address, other than that of the M-IC (Main) from among the units within the same group of indoor units. This must be in sequence with the M-IC (Main).
Outdoor unit	051 to 100	Use the smallest address of all the M-NET control indoor units plus 50.
Main M-NET Remote Controller (M-NET RC)	101 to 150	Set at an M-IC (Main) address within the same group plus 100.

d. Use the M-NET control indoor unit (M-IC) within the group with the most functions as the M-IC (Main) unit.

Combinations of 1 through 3 above are possible.

• **Name, Symbol and the Maximum Remote controller Units for Connection**

Name	Symbol	Maximum units for connection
Outdoor unit	OC	—
M-NET control Indoor unit	M-IC	1 OC unit can be connected to 1 to 7 (P36) / 1 to 10 (P48) M-IC units
M-NET remote controller	M-NET RC	Maximum 2 M-NET RC for 1 indoor unit, Maximum 12 M-NET RC for 1 OC

Permissible Lengths	Prohibited items
Longest transmission cable length AWG 16 [1.25 mm²] $L_1 + L_2$, $L_3 + L_1 \leqq$ 656 ft [200 m] M-NET Remote controller cable length 1. If AWG 20 to AWG 16 [0.5 to 1.25 mm²] ℓ_1, $\ell_2 \leqq$ 33ft [10 m] 2. If the length exceeds 33ft [10 m], the exceeding section should be AWG 16 [1.25 mm²] and that section should be a value within the total extension length of the transmission cable and maximum transmission cable length. (L_3)	• M-NET remote controller (M-NET RC) and MA remote controller (MA RC) cannot be used together. • Do not connect anything with TB15 of M-NET control indoor unit (M-IC). 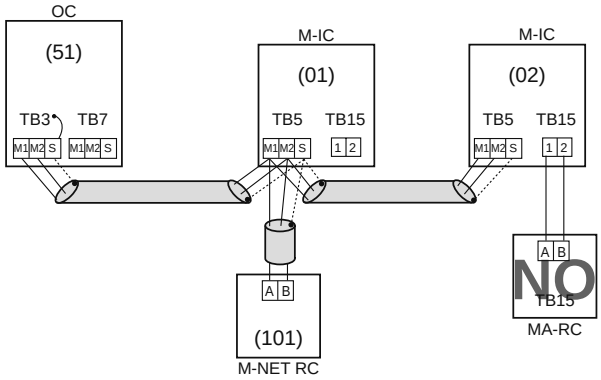
Same as above	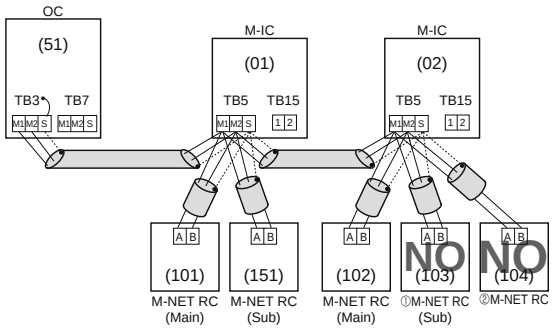 ① Use the M-NET control indoor unit (M-IC) address plus 150 as the sub M-NET remote controller address. In this case, it should be 152. ② 3 or more M-NET remote controllers (M-NET RC) cannot be connected to 1 M-NET control indoor unit.
Same as above	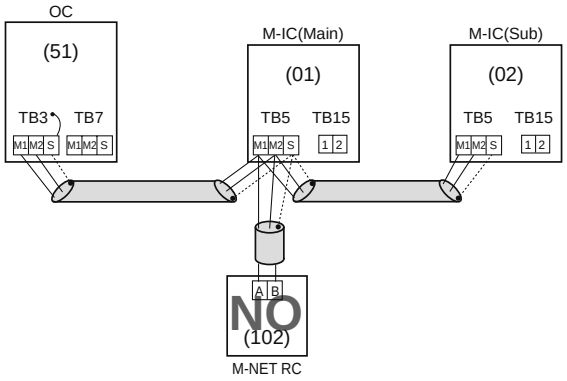 ① The M-NET remote controller address is the M-NET control indoor unit main address plus 100. In this case, it should be 101.

B. Example of a group operation system with 2 or more outdoor units and a M-NET remote controller.
(Address settings are necessary.)

Examples of Transmission Cable Wiring

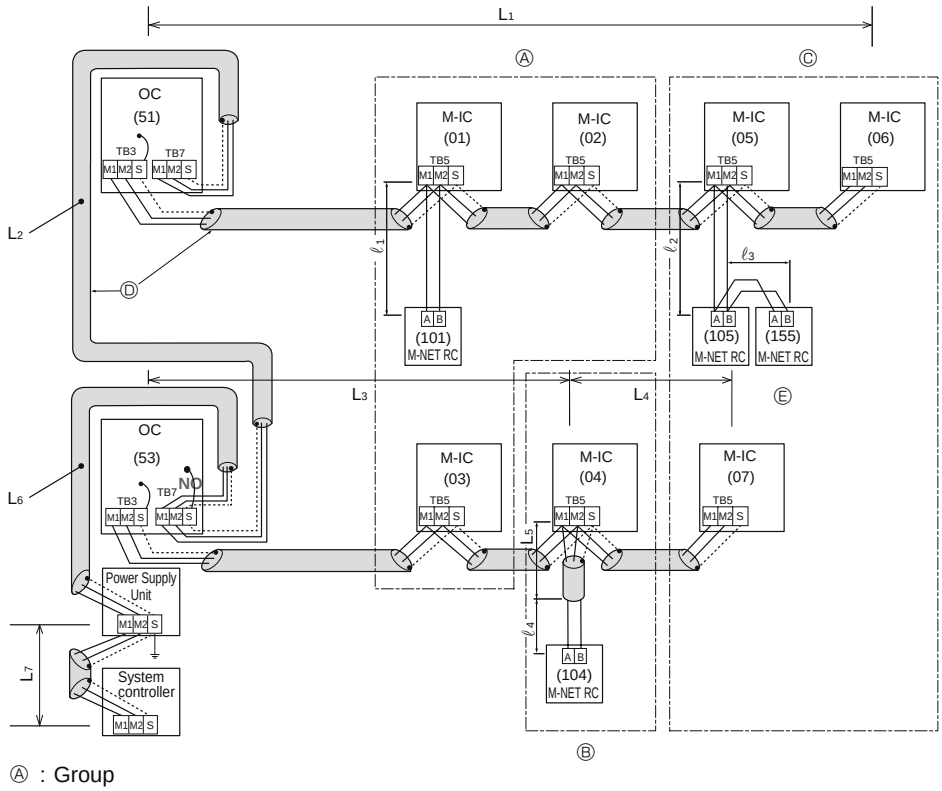

Ⓐ : Group
Ⓑ : Group
Ⓒ : Group
Ⓓ : Shielded Wire
Ⓔ : Sub M-NET Remote Controller
( ): Address example

Wiring Method Address Settings

a. Always use shielded wire when making connections between the outdoor unit (OC) and the M-NET control indoor unit (M-IC), as well for all OC-OC, and IC-IC wiring intervals.
b. Use feed wiring to connect terminals M1 and M2 and the ground terminal on the transmission cable terminal block (TB3) of each outdoor unit (OC) to terminals M1 and M2 on the terminal S on the transmission cable terminal block of the M-NET control indoor unit (M-IC).
c. Connect terminals M1 and M2 on the transmission cable terminal block of the M-NET control indoor unit (M-IC) that has the most recent address within the same group to the terminal block on the M-NET remote controller (M-NET RC).
d. Connect together terminals M1, M2 and terminal S on the terminal block for centralized control (TB7) for the outdoor unit (OC).
e. DO NOT change the jumper connector CN41 on outdoor multi controller circuit board.
f. The earth processing of S terminal for the centralized control terminal block (TB7) is unnecessary. Connect the terminal S on the power supply unit with the earth.
g. Set the address setting switch as follows.

Unit	Range	Setting Method
M-IC (Main)	01 to 50	Use the smallest address within the same group of M-NET control indoor units.
M-IC (Sub)	01 to 50	Use an address, other than the M-IC (Main) in the same group of M-NET control indoor units. This must be in sequence with the M-IC (Main).
Outdoor Unit	51 to 100	Use the smallest address of all the M-NET control indoor units plus 50. The address automatically becomes “100” if it is set as “01–50”.
Main M-NET Remote Controller	101 to 150	Set at an M-IC (Main) address within the same group plus 100.
Sub M-NET Remote Controller	151 to 200	Set at an M-IC (Main) address within the same group plus 150.
MA Remote Controller	—	Address setting is not necessary. (Main/sub setting is necessary.)

h. The group setting operations among the multiple M-NET control indoor units is done by the M-NET remote controller (M-NET RC) after the electrical power has been turned on.

• **Name, Symbol, and the Maximum Units for Connection**

Permissible Length

- Longest length via outdoor units : $L_1+L_2+L_3+L_4$, $L_1+L_2+L_3+L_5$, $L_1+L_2+L_6+L_7$ ≦ 1640 ft [500 m] (AWG 16 [1.25 mm²])
- Longest transmission cable length : L_1, L_3+L_4, L_3+L_5, L_2+L_6, L_7 ≦ 656 ft [200 m] (AWG 16 [1.25 mm²])
- M-NET Remote controller cable length : ℓ_1, ℓ_2, $\ell_2+\ell_3$, ℓ_4 ≦ 33 ft [10 m] (AWG 20 to AWG 16 [0.5 to 1.25 mm²])
  If the length exceeds 33 ft [10 m], use a AWG 16 [1.25 mm²] shielded wire. The length of this section (L_8) should be included in the calculation of the maximum length and overall length.

Prohibited items

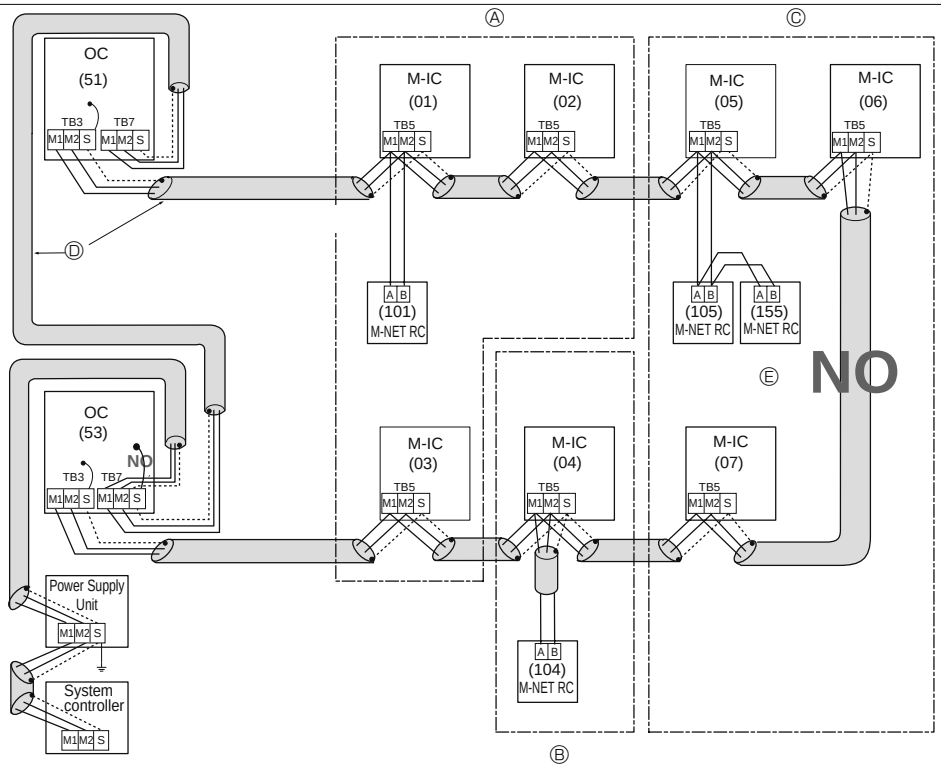

Ⓐ : Group
Ⓑ : Group
Ⓒ : Group
Ⓓ : Shielded Wire
Ⓔ : Sub M-NET Remote Controller
( ): Address example

- Never connect together the terminal blocks (TB5) for transmission wires for M-NET control indoor units (M-IC) that have been connected to different outdoor units (OC).
- Set all addresses to ensure that they are not overlapped.
- M-NET remote controller and MA remote controller cannot be connected with the M-NET control indoor unit of the same group wiring together.

C. Example of a MA remote controller system (address setting is not necessary.)
NOTE : In the case of same group operation, need to set the address that is only main M-NET control indoor unit.

Example of wiring control cables	Wiring Method and Address Setting
1. Standard operation 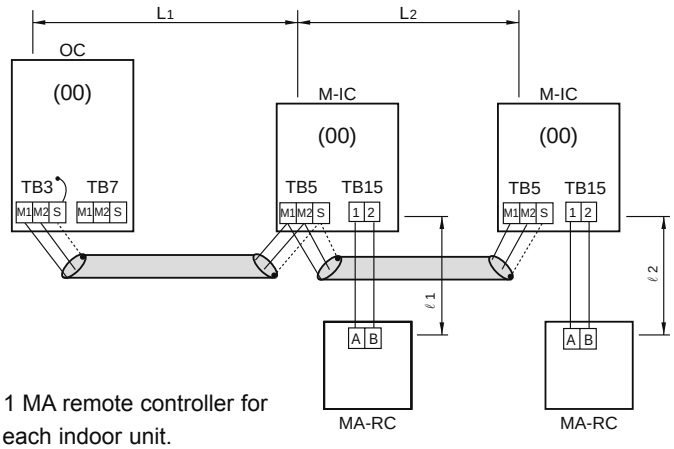 • 1 MA remote controller for each indoor unit.	a. Use feed wiring to connect terminals M1 and M2 on transmission cable block (TB3) for the outdoor unit (OC) to terminals M1 and M2 on the transmission cable block (TB5) of each M-NET control indoor unit (M-IC). Use non-polarized 2-core wire. b. Connect terminals 1 and 2 on transmission cable terminal block (TB15) for each M-NET control indoor unit with the terminal block for the MA remote controller (MA-RC).
2. Operation using two remote controllers 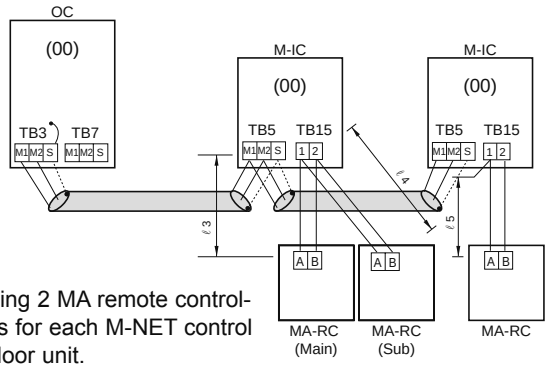 • Using 2 MA remote controllers for each M-NET control indoor unit.	a. The same as above a b. The same as above b c. In the case of using 2 remote controllers, connect terminals 1 and 2 on transmission cable terminal block (TB15) for each indoor unit with the terminal block for 2 MA remote controllers. · Set either one of the controllers to "sub remote controller". Refer to the installation manual of MA remote controller.
3. Group operation 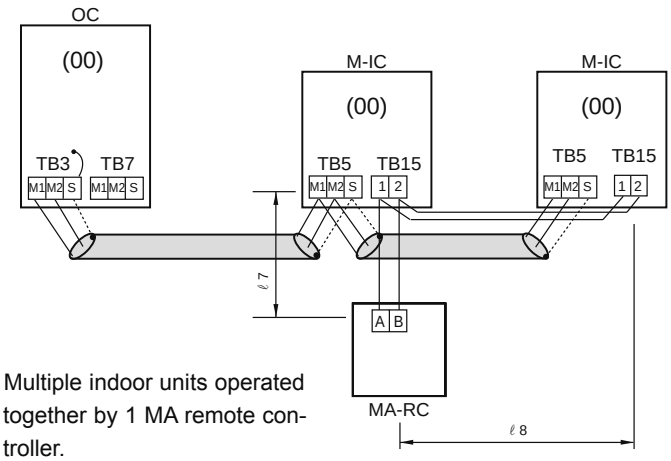 • Multiple indoor units operated together by 1 MA remote controller.	a. The same as above a b. The same as above b c. Connect terminals 1 and 2 on transmission cable terminal block (TB15) of each M-NET control indoor unit, which is doing group operation with the terminal block the MA remote controller. Use non-polarized 2-core wire. d. In the case of same group operation, need to set the address that is only main M-NET control indoor unit. Please set the smallest address within number 01–50 of the M-NET control indoor unit with the most functions in the same group.
Combinations of 1 through 3 above are possible.	

Permissible Lengths	Prohibited items
Longest transmission cable length: $L_1 + L_2 \leqq 656$ ft [200 m] (AWG 16 [1.25 mm²]) MA remote controller cable length: ℓ_1, $\ell_2 \leqq 656$ ft [200 m] (AWG 22 to AWG 16 [0.3 to 1.25 mm²])	The MA remote controller and the M-NET remote controller cannot be used together with the M-NET control indoor unit of the same group. 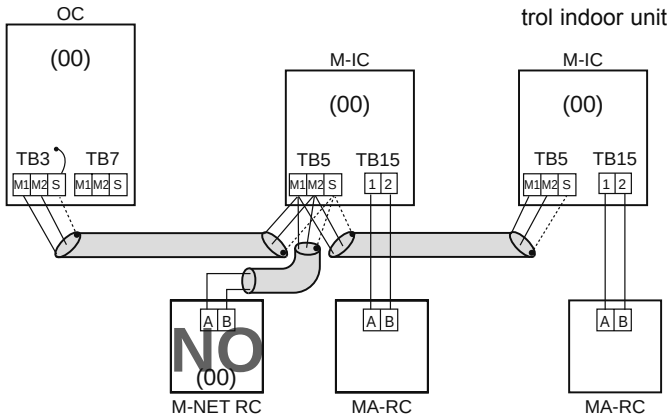
Longest transmission cable length: $L_1 + L_2 \leqq 656$ ft [200 m] (AWG 16 [1.25 mm²]) MA remote controller cable length: $\ell_3 + \ell_4$, $\ell_5 \leqq 656$ ft [200 m] (AWG 22 to AWG 16 [0.3 to 1.25 mm²])	3 MA remote controllers or more cannot be connected with the M-NET control indoor unit of the same group. 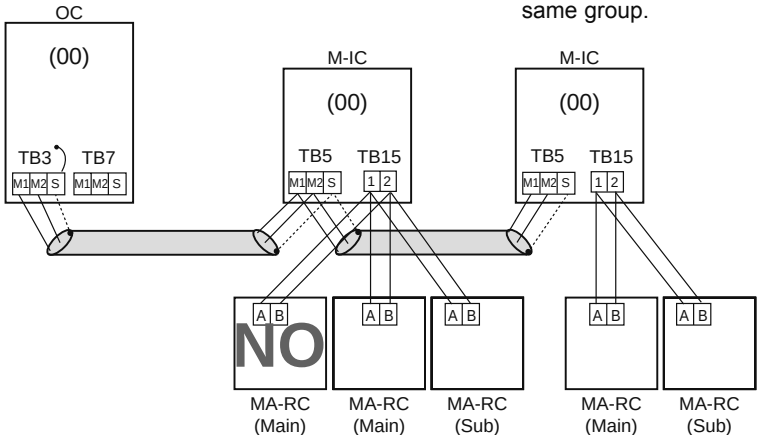
Longest transmission cable length: $L_1 + L_2 \leqq 656$ ft [200 m] (AWG 16 [1.25 mm²]) MA remote controller cable length: $\ell_7 + \ell_8 \leqq 656$ ft [200 m] (AWG 22 to AWG 16 [0.3 to 1.25 mm²])	The second MA remote controller is connected with the terminal block (TB15) for the MA remote controller of the same M-NET control indoor unit (M-IC) as the first MA remote control. 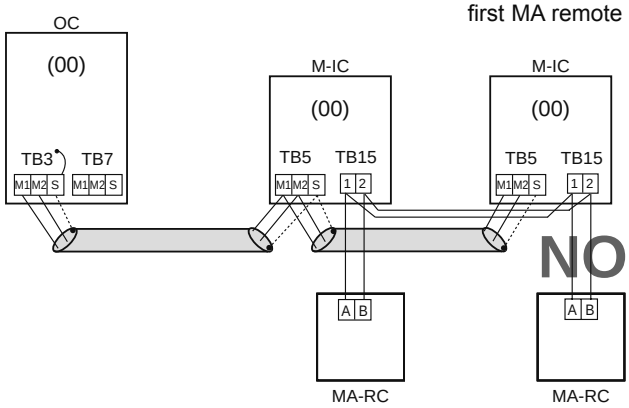

D. Example of a group operation with 2 or more outdoor units and a MA remote controller.
(Address settings are necessary.)

Examples of Transmission Cable Wiring

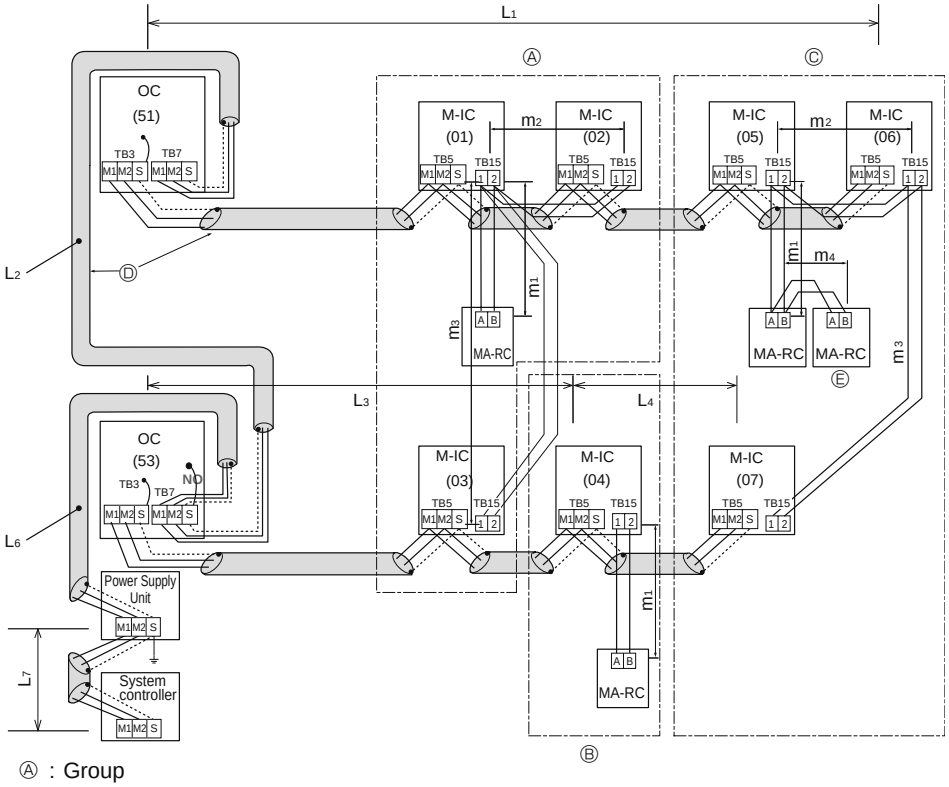

Ⓐ : Group
Ⓑ : Group
Ⓒ : Group
Ⓓ : Shielded Wire
Ⓔ : Sub MA Remote Controller
( ): Address example

Wiring Method Address Settings

a. Always use shielded wire when making connections between the outdoor unit (OC) and the M-NET control indoor unit (M-IC), as well for all OC-OC, and IC-IC wiring intervals.
b. Use feed wiring to connect terminals M1 and M2 and the ground terminal on the transmission cable terminal block (TB3) of each outdoor unit (OC) to terminals M1 and M2 on the terminal S on the transmission cable terminal block of the M-NET control indoor unit (M-IC).
c. Connect terminals M1 and M2 on the transmission cable terminal block of the M-NET control indoor unit (M-IC) that has the most recent address within the same group to the terminal block on the M-NET remote controller (M-NET RC).
d. Connect together terminals M1, M2 and terminal S on the terminal block for centralized control (TB7) for the outdoor unit (OC).
e. DO NOT change the jumper connector CN41 on outdoor multi controller circuit board.
f. The earth processing of S terminal for the centralized control terminal block (TB7) is unnecessary. Connect the terminal S on the power supply unit with the earth.
g. Set the address setting switch as follows.

Unit	Range	Setting Method
M-IC (Main)	01 to 50	Use the smallest address within the same group of indoor units.
M-IC (Sub)	01 to 50	Use an address, other than the M-IC (Main) in the same group of M-NET indoor units. This must be in sequence with the M-IC (Main).
Outdoor Unit	51 to 100	Use the smallest address of all the indoor units plus 50. The address automatically becomes “100” if it is set as “01–50”.
Main M-NET Remote Controller	101 to 150	Set at an M-IC (Main) address within the same group plus 100.
Sub M-NET Remote Controller	151 to 200	Set at an M-IC (Main) address within the same group plus 150.
MA Remote Controller	—	Address setting is not necessary. (Main/sub setting is necessary.)

h. The group setting operations among the multiple M-NET control indoor units is done by the M-NET remote controller (M-NET RC) after the electrical power has been turned on.
i. When connecting PWFY unit
- For PWFY series, do not set up group connection with other indoor units.
- LOSSNAY is not available for use with PWFY series.
- Use a WMA remote controller for operation of PWFY series.

For more details, refer to the service manual for PWFY series.

• **Name, Symbol, and the Maximum Units for Connection**

Permissible Length	Longest length via outdoor unit (M-NET cable): $L_1+L_2+L_3+L_4$ and $L_1+L_2+L_6+L_7 \leqq 1640$ ft [500 m] (AWG 16 [1.25 mm²] or more) Longest transmission cable length (M-NET cable): L_1 and L_3+L_4 and L_2+L_6 and $L_7 \leqq 656$ ft [200 m] (AWG 16 [1.25 mm²] or more) MA Remote controller cable length: m_1 and $m_1+m_2+m_3$ and $m_1+m_2+m_3+m_4 \leqq$ 656 ft [200 m] (AWG 22 to AWG 16 [0.3 to 1.25 mm²])
Prohibited items	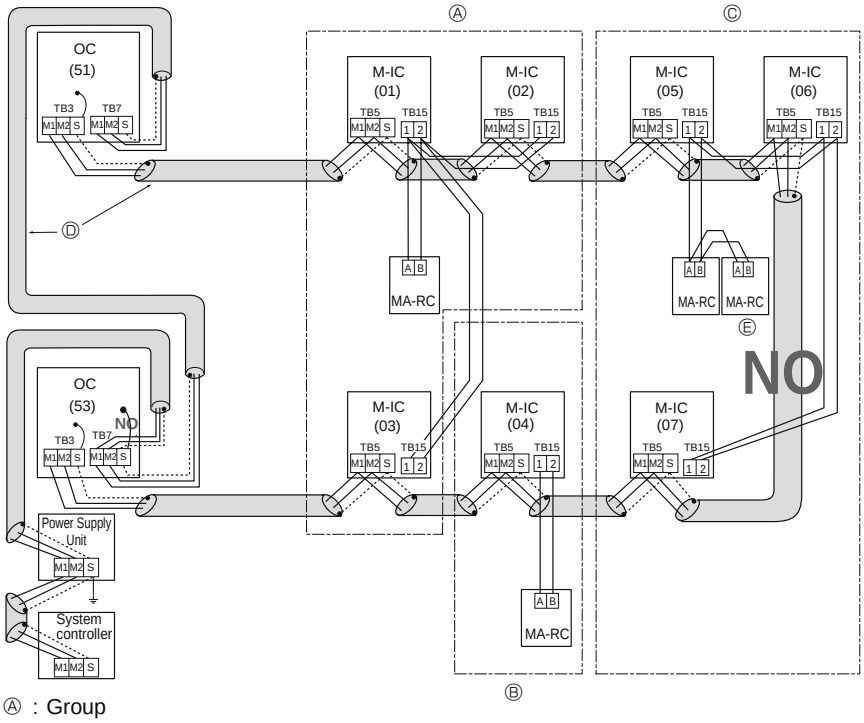 • Never connect together the terminal blocks (TB5) for transmission wires for M-NET control indoor units (M-IC) that have been connected to different outdoor units (OC). • M-NET remote controller and MA remote controller cannot be connected with the M-NET control indoor unit of the same group wiring together.

8 TROUBLESHOOTING

8-1. CHECK POINTS FOR TEST RUN

8-1-1. Procedures before test run

(1) Before a test run, make sure that the following work is completed.

- Installation related :
  Make sure that the panel of cassette type and electrical wiring are done.
  Otherwise electrical functions like auto vane will not operate normally.
- Piping related :
  Perform leakage test of refrigerant and drain piping.
  Make sure that all joints are perfectly insulated.
  Check stop valves on both liquid and gas side for full open.
- Electrical wiring related :
  Check ground wire, transmission cable, remote controller cable, and power supply cable for secure connection.
  Make sure that all switch settings of address or adjustments for special specification systems are correctly settled.

(2) Safety check :
With the insulation tester of 500 V, inspect the insulation resistance.
Do not touch the transmission cable and remote controller cable with the tester.
The resistance should be over 1.0 MΩ. Do not proceed inspection if the resistance is under 1.0 MΩ.
Inspect between the outdoor unit power supply terminal block and ground first, metallic parts like refrigerant pipes or the electrical box next, then inspect all electrical wiring of outdoor unit, indoor unit, and all linked equipment .

(3) Before operation :
a) Turn the power supply switch of the outdoor unit to on for compressor protection. For a test run, wait at least 12 hours from this point.
b) Register control systems into remote controller(s). Never touch the ON/OFF switch of the remote controller(s). Refer to “7-2. Special Function Operation and Settings for M-NET Remote Controller” as for settings. In MA remote controller(s), this registration is unnecessary.

(4) More than 12 hours later from power supply to the outdoor unit, turn all power switch to on for the test run. Perform test run according to the “Operation procedure” table of the bottom of this page. While test running, make test run reports .

8-1-1-1. Test run for M-NET Remote controller

For the detailed procedure, refer to the remote controller's manuals.

8-1-1-2. Test run for wired remote controller <PAR-30MAA> <PAR-31MAA>

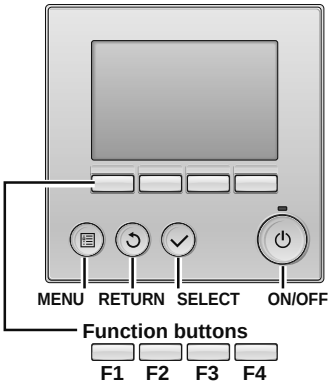

① **Select "Service" from the Main menu, and press the ✓ button.**

Select "Test run" with the F1 or F2 button, and press the ✓ button.

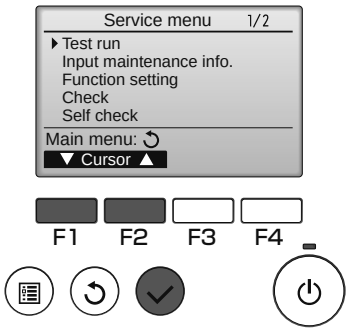

② **Select "Test run" with the F1 or F2 button, and press the ✓ button.**

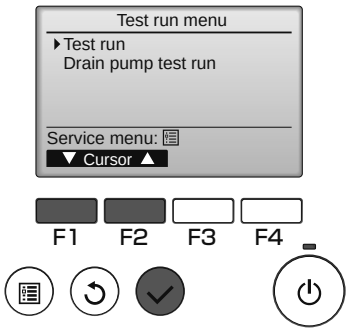

Test run operation

Press the F1 button to go through the operation modes in the order of "Cool and Heat".

Cool mode: Check the cold air blows out.
Heat mode: Check the heat blows out.

Press the ✓ button and open the Vane setting screen.

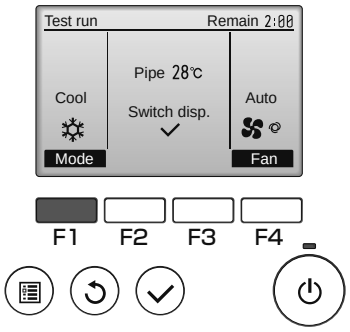

Auto vane check*

Check the auto vane with the F1 F2 buttons.
Check the operation of the outdoor unit fan, also.

Press the ↺ button to return to "Test run operation".

Press the ⏻ button.

When the test run is completed, the "Test run menu" screen will appear.
The test run will automatically stop after 2 hours.
*The function is available only for the model with vanes.

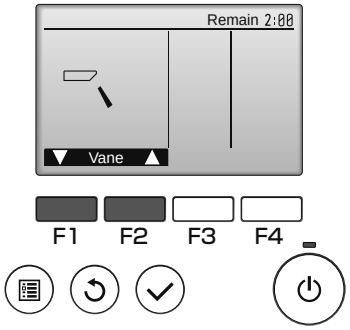

8-1-2. Countermeasures For Error During Test Run

• If a problem occurs during test run, a code number will appear on the remote controller (or LED on the outdoor unit), and the air conditioning system will automatically cease operating.

Determine the nature of the abnormality and apply corrective measures.

Check code (2 digits)	Check code (4 digits)	Trouble	Detected Unit			Remarks
			Indoor	Outdoor	Remote Controller	
Ed	0403	Serial communication error		○		Outdoor unit Multi controller board–Power board communication trouble
U2	1102	Compressor temperature trouble		○		Check delay code 1202
UE	1302	High pressure trouble		○		Check delay code 1402
U7	1500	Superheat due to low discharge temperature trouble		○		Check delay code 1600
U2	1501	Refrigerant shortage trouble		○		Check delay code 1601
		Closed valve in cooling mode		○		Check delay code 1501
EF	1508	4-way valve trouble in heating mode		○		Check delay code 1608
UF	4100	Compressor current interruption (Locked compressor)		○		Check delay code 4350
Pb	4114	Fan trouble (Indoor)	○			
UP	4210	Compressor overcurrent interruption		○		
U9	4220	Voltage shortage/overvoltage/PAM error/L1open phase/power synchronization signal error		○		Check delay code 4320
U5	4230	Heat sink temperature trouble		○		Check delay code 4330
U6	4250	Power module Trouble or Overcurrent trouble		○		Check delay code 4350
U8	4400	Fan trouble (Outdoor)		○		Check delay code 4500
U4	5105	Outdoor liquid pipe temperature thermistor (TH3) open/short		○		Check delay code 1205
U4	5106	Ambient temperature thermistor (TH7) open/short		○		Check delay code 1221
U4	5109	HIC pipe temperature thermistor (TH2) open/short		○		Check delay code 1222
U4	5110	Heat sink temperature thermistor (TH8) open/short		○		Check delay code 1214
F5	5201	High pressure sensor (63HS) trouble		○		Check delay code 1402
F3	5202	Low pressure sensor (63LS) trouble		○		Check delay code 1400
UH	5300	Primary current error		○		Check delay code 4310
A0	6600	Duplex address error	○	○	○	Only M-NET Remote controller is detected.
A2	6602	Transmission processor hardware error	○	○	○	Only M-NET Remote controller is detected.
A3	6603	Transmission bus BUSY error	○	○	○	Only M-NET Remote controller is detected.
A6	6606	Signal communication error with transmission processor	○	○	○	Only M-NET Remote controller is detected.
A7	6607	No ACK error	○		○	Only M-NET Remote controller is detected.
A8	6608	No response frame error	○		○	Only M-NET Remote controller is detected.
E0/E4	6831	MA communication receive error (no receive signal)	○		○	Only MA Remote controller is detected.
E3/E5	6832	MA communication send error	○		○	Only MA Remote controller is detected.
E3/E5	6833	MA communication send error	○		○	Only MA Remote controller is detected.
E0/E4	6834	MA communication receive error	○		○	Only MA Remote controller is detected.
EF	7100	Total capacity error		○		
EF	7101	Capacity code error	○	○		
EF	7102	Connecting unit number error		○		
EF	7105	Address setting error		○		
EF	7130	Incompatible unit combination		○		

NOTES:

1. When the outdoor unit detects No ACK error/No response error, an object indoor unit is treated as a stop, and not assumed to be abnormal.

2. The check codes displayed on the units may be different between the error source and others. In that case, please refer to the check code of error source by displayed attribute and address.

3. Refer to the service manual of indoor unit or remote controller for the detail of error detected in indoor unit or remote controller.

● Self-diagnosis function
The indoor and outdoor units can be diagnosed automatically using the self-diagnosis switch (SW1) and LED indication (LED1, LED2) found on the outdoor multi controller circuit board.
LED indication : Set all contacts of SW1 to OFF.

● During normal operation
The LED indicates the drive state of outdoor unit.

Bit	1	2	3	4	5	6	7	8
Indication	Compressor operated	52C	21S4	SV1	(SV2)	—	—	Always lit

[Example]
When the compressor and SV1 are on during cooling operation.

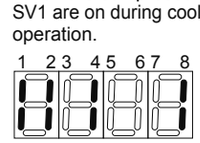

8-1-3. SELF-DIAGNOSIS ACTION BY FLOWCHART

Check code	
0403 (Ed)	Serial communication error

Abnormal points and detection methods	Causes and checkpoints
Abnormal if serial communication between the outdoor controller board and outdoor power board is defective.	① Wire breakage or contact failure of connector CN2 or CN4 ② Malfunction of power board communication circuit on outdoor controller board ③ Malfunction of communication circuit on outdoor power board

●Diagnosis of defectives

Make sure to turn the power OFF before connecting/disconnecting any connectors, or replacing boards.

Diagnosis	Remedy

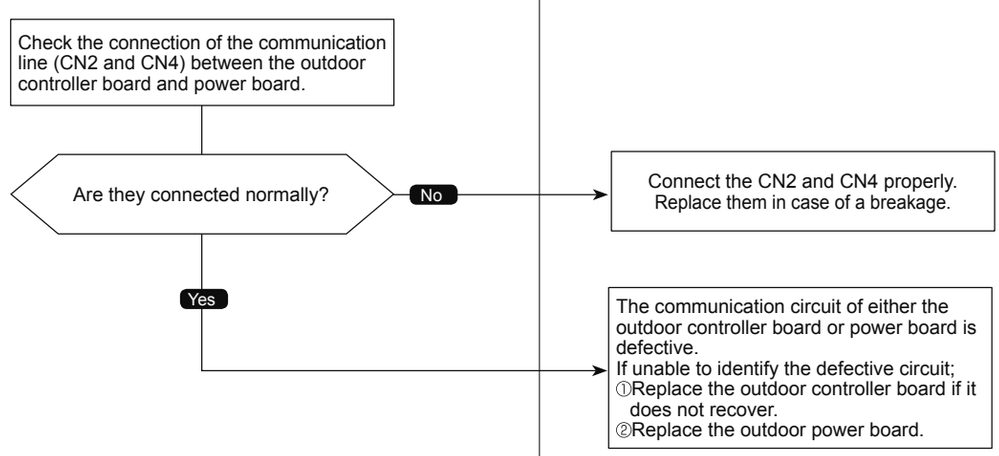

Check code
1102 (U2)

Compressor temperature trouble

Chart 1 of 2

Abnormal points and detection methods	Causes and checkpoints
(1) Abnormal if TH4 falls into following temperature conditions; ●exceeds 230°F [110℃] continuously for 5 minutes ●exceeds 257°F[125℃] (2) Abnormal if a pressure detected by the high pressure sensor and converted to saturation temperature exceeds 104°F [40℃] during defrosting, and TH4 exceeds 230°F [110℃]. TH4: Thermistor <Compressor> LEV: Electronic expansion valve	① Malfunction of stop valve ② Over-heated compressor operation caused by shortage of refrigerant ③ Defective thermistor ④ Defective outdoor controller board ⑤ LEV performance failure ⑥ Defective indoor controller board ⑦ Clogged refrigerant system caused by foreign object ⑧ Refrigerant shortage while in heating operation (Refrigerant liquid accumulation in compressor while indoor unit is OFF/thermo-OFF.)

●Diagnosis of defectives

Make sure to turn the power OFF before connecting/disconnecting any connectors, or replacing boards.

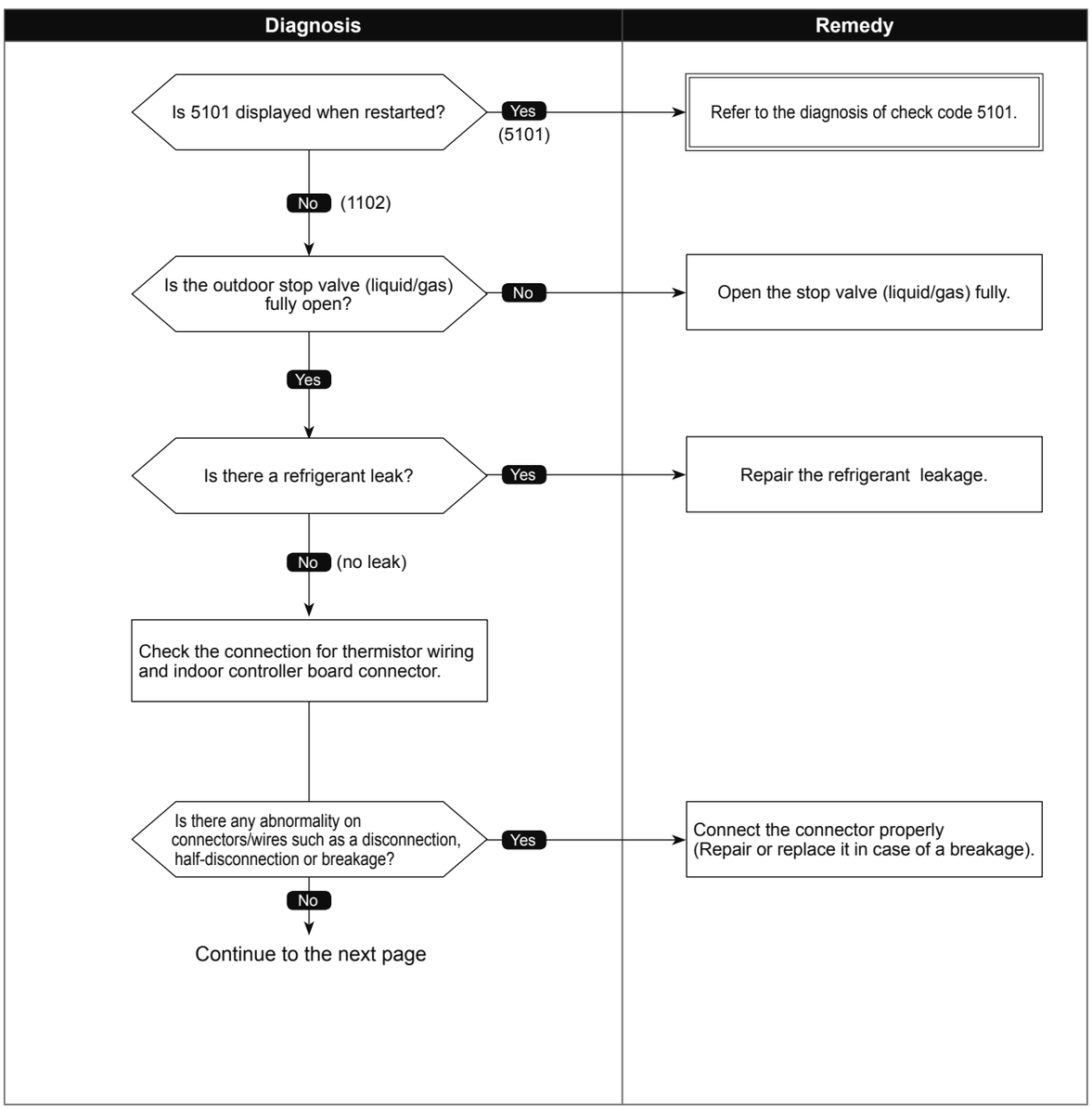

Check code
1102 (U2)

Compressor temperature trouble

Chart 2 of 2

●Diagnosis of defectives

Make sure to turn the power OFF before connecting/disconnecting any connectors, or replacing boards.

Diagnosis	Remedy

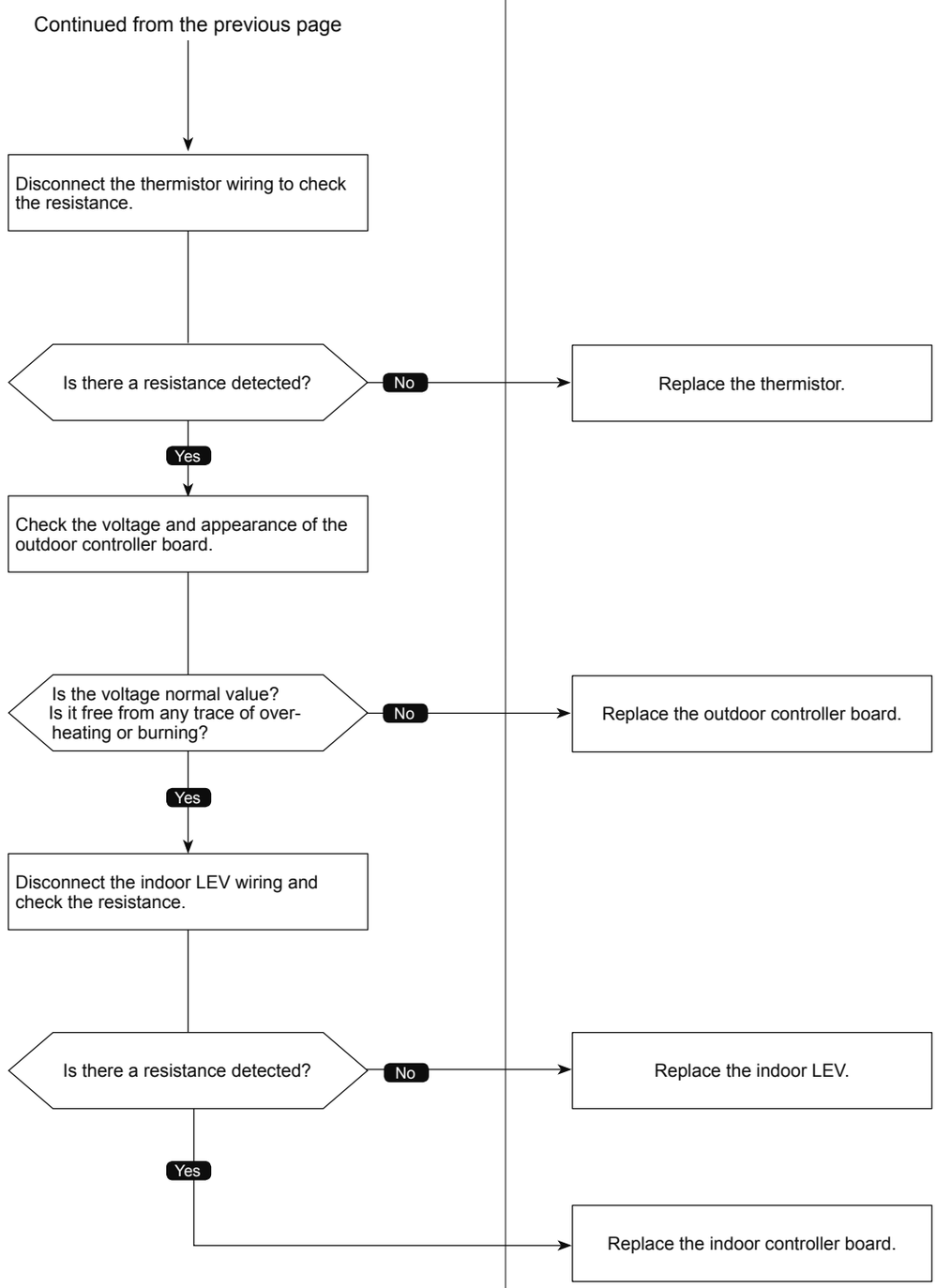

Check code

1302 (UE)

High pressure trouble

Chart 1 of 4

Abnormal points and detection methods	Causes and checkpoints
(1) High pressure abnormality (63H operation) Abnormal if 63H operates(*) during compressor operation. (*602 PSIG [4.15 MPaG]) (2) High pressure abnormality (63HS detected) 1. Abnormal if a pressure detected by 63HS is 625 PSIG [4.31 MPaG] or more during compressor operation. 2. Abnormal if a pressure detected by 63HS is 600 PSIG [4.14 MpaG] or more for 3 minutes during compressor operation. 63H : High pressure switch 63HS: High pressure sensor LEV : Electronic expansion valve SV1 : Solenoid valve TH7 : Thermistor <Ambient>	① Defective operation of stop valve (not fully open) ② Clogged or broken pipe ③ Malfunction or locked outdoor fan motor ④ Short-cycle of outdoor unit ⑤ Dirt of outdoor heat exchanger ⑥ Remote controller transmitting error caused by noise interference ⑦ Contact failure of the outdoor controller board connector ⑧ Defective outdoor controller board ⑨ Short-cycle of indoor unit ⑩ Decreased airflow, clogged filter, or dirt on indoor unit. ⑪ Malfunction or locked indoor fan motor ⑫ Decreased airflow caused by defective inspection of outdoor temperature thermistor (It detects lower temperature than actual temperature.) ⑬ Indoor LEV performance failure ⑭ Malfunction of fan driving circuit ⑮ SV1 performance failure ⑯ Defective high pressure sensor ⑰ Defective high pressure sensor input circuit on outdoor controller board

●Diagnosis of defectives

Make sure to turn the power OFF before connecting/disconnecting any connectors, or replacing boards.

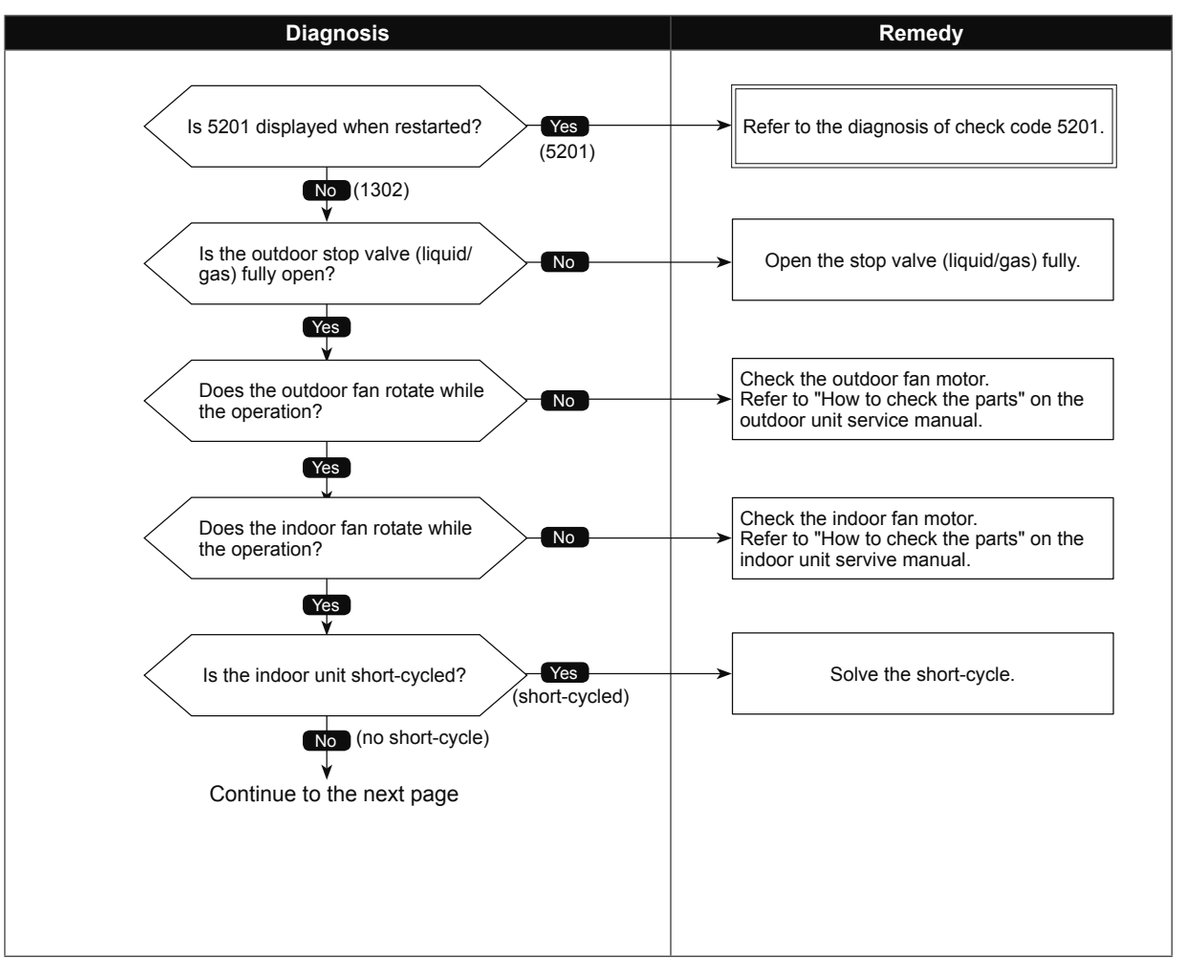

Check code

1302 (UE)

High pressure trouble

●Diagnosis of defectives

Make sure to turn the power OFF before connecting/disconnecting any connectors, or replacing boards.

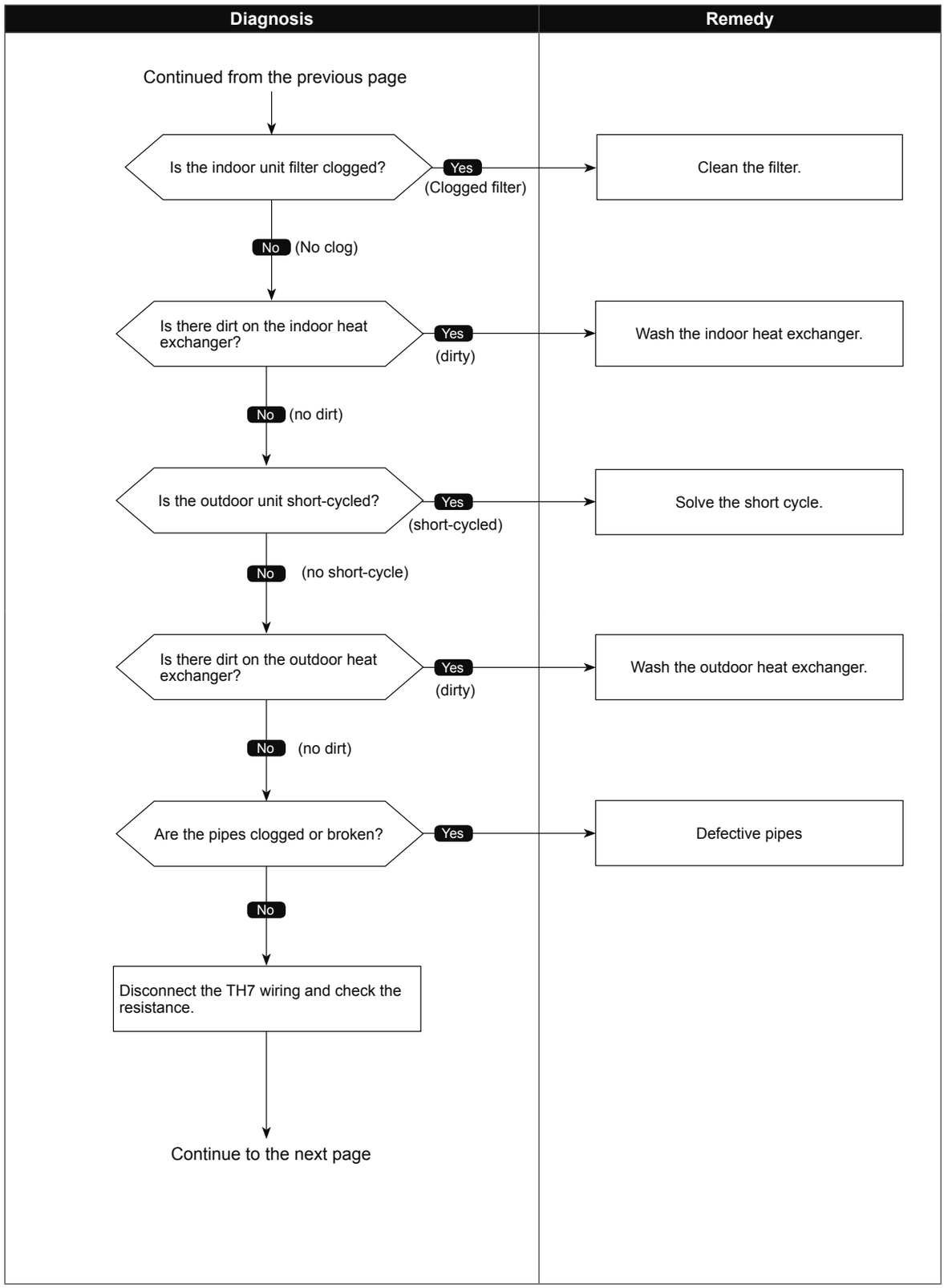

High pressure trouble

●Diagnosis of defectives

Make sure to turn the power OFF before connecting/disconnecting any connectors, or replacing boards.

Diagnosis	Remedy
Continued from the previous page	
Is there a resistance detected?	
No →	Replace the TH7.
Yes ↓	
Disconnect the indoor LEV wiring to check the resistance.	
Is there a resistance detected?	
No →	Replace the indoor LEV.
Yes ↓	
Check the voltage(*) and appearance of the indoor controller board.	
*For the voltage, refer to "8-8.HOW TO CHECK THE COMPONENTS".	
Is the voltage normal? Is it free from any trace of over-heating or burning?	
No →	Replace the indoor controller board.
Yes ↓	
Check the resistance of SV1.	
Continue to the next page	

Check code
1302 (UE)

High pressure trouble

●Diagnosis of defectives

Make sure to turn the power OFF before connecting/disconnecting any connectors, or replacing boards.

Diagnosis	Remedy

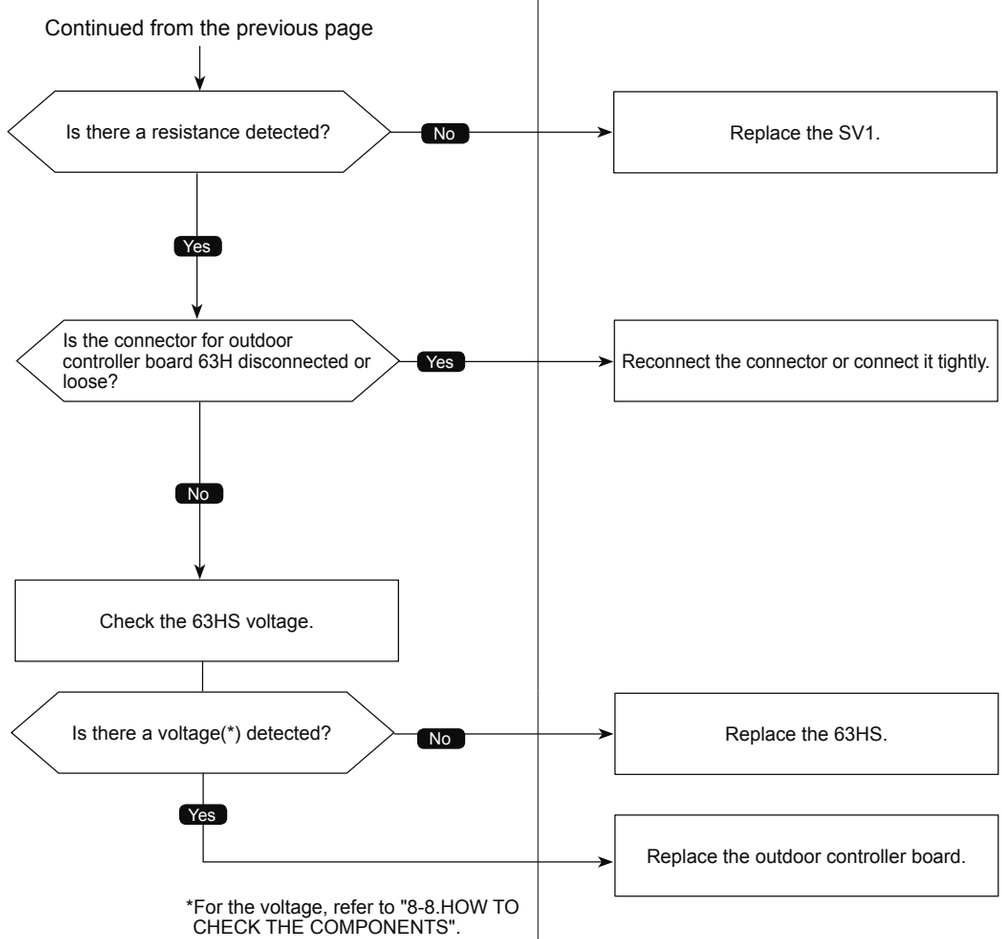

Check code

1500
(U7)

Superheat due to low discharge temperature trouble

Chart 1 of 2

Abnormal points and detection methods	Causes and checkpoints
Abnormal if the discharge superheat is continuously detected −27°F [−15℃](*) or less for 5 minutes even though the indoor LEV has minimum open pulse after the compressor starts operating for 10 minutes. LEV : Electronic expansion valve TH4 : Thermistor <Compressor> 63HS : High pressure sensor *At this temperature, conditions for the abnormality detection will not be satisfied if no abnormality is detected on either TH4 or 63HS.	① Disconnection or loose connection of TH4 ② Defective holder of TH4 ③ Disconnection of LEV coil ④ Disconnection of LEV connector ⑤ LEV performance failure

●Diagnosis of defectives

Make sure to turn the power OFF before connecting/disconnecting any connectors, or replacing boards.

Diagnosis	Remedy

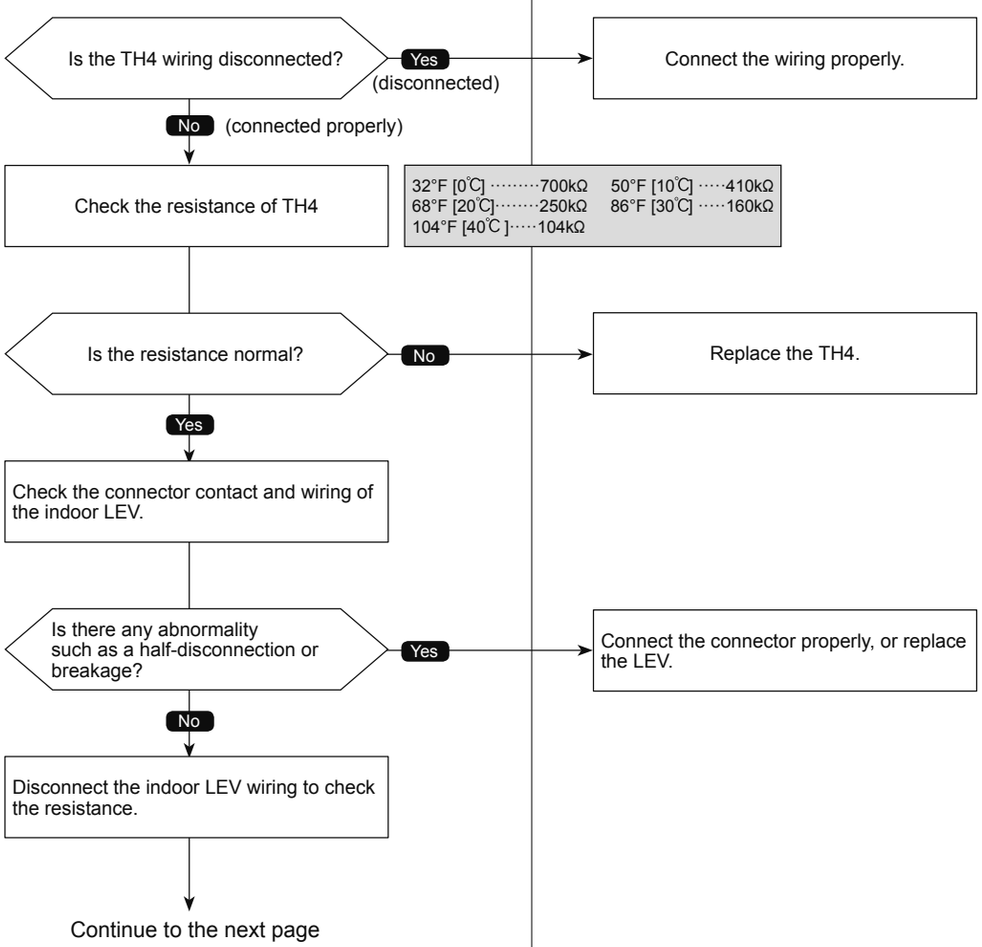

Check code
1500 (U7)

Superheat due to low discharge temperature trouble

Chart 2 of 2

●Diagnosis of defectives

Make sure to turn the power OFF before connecting/disconnecting any connectors, or replacing boards.

Diagnosis	Remedy

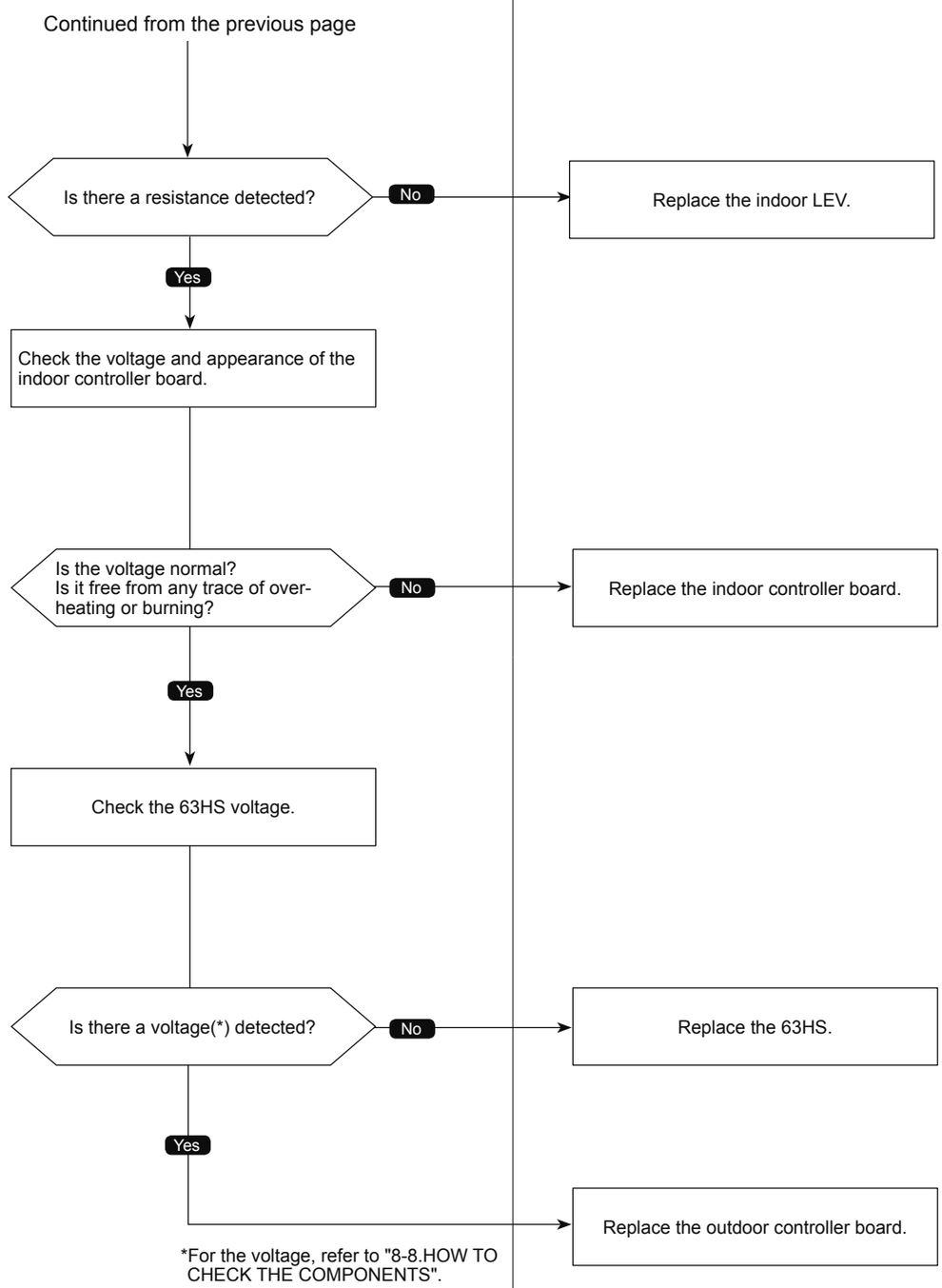

Check code
1501 (U2)

Refrigerant shortage trouble

Chart 1 of 2

Abnormal points and detection methods	Causes and checkpoints
(1) Abnormal when all of the following conditions are satisfied for 15 consecutive minutes: 1. The compressor is operating in HEAT mode. 2. Discharge super heat is 176°F [80℃] or more. 3. Difference between TH7 and the TH3 applies to the formula of (TH7−TH3 < 9°F [5℃]). 4.The saturation temperature converted from a high pressure sensor detects below 95°F [35℃]. (2) Abnormal when all of the following conditions are satisfied: 1.The compressor is in operation. 2.When cooling, discharge superheat is 176°F [80℃] or more, and the saturation temperature converted from a high pressure sensor is over −40°F [−40℃]. When heating, discharge superheat is 194°F [90℃] or more.	①Defective operation of stop valve (not fully open) ②Defective thermistor ③Defective outdoor controller board ④Indoor LEV performance failure ⑤Gas leakage or shortage ⑥Defective 63HS TH3 : Thermistor <Outdoor liquid pipe> TH7 : Thermistor <Ambient> LEV : Electronic expansion valve 63HS : High pressure sensor

●Diagnosis of defectives

Make sure to turn the power OFF before connecting/disconnecting any connectors, or replacing boards.

Diagnosis	Remedy

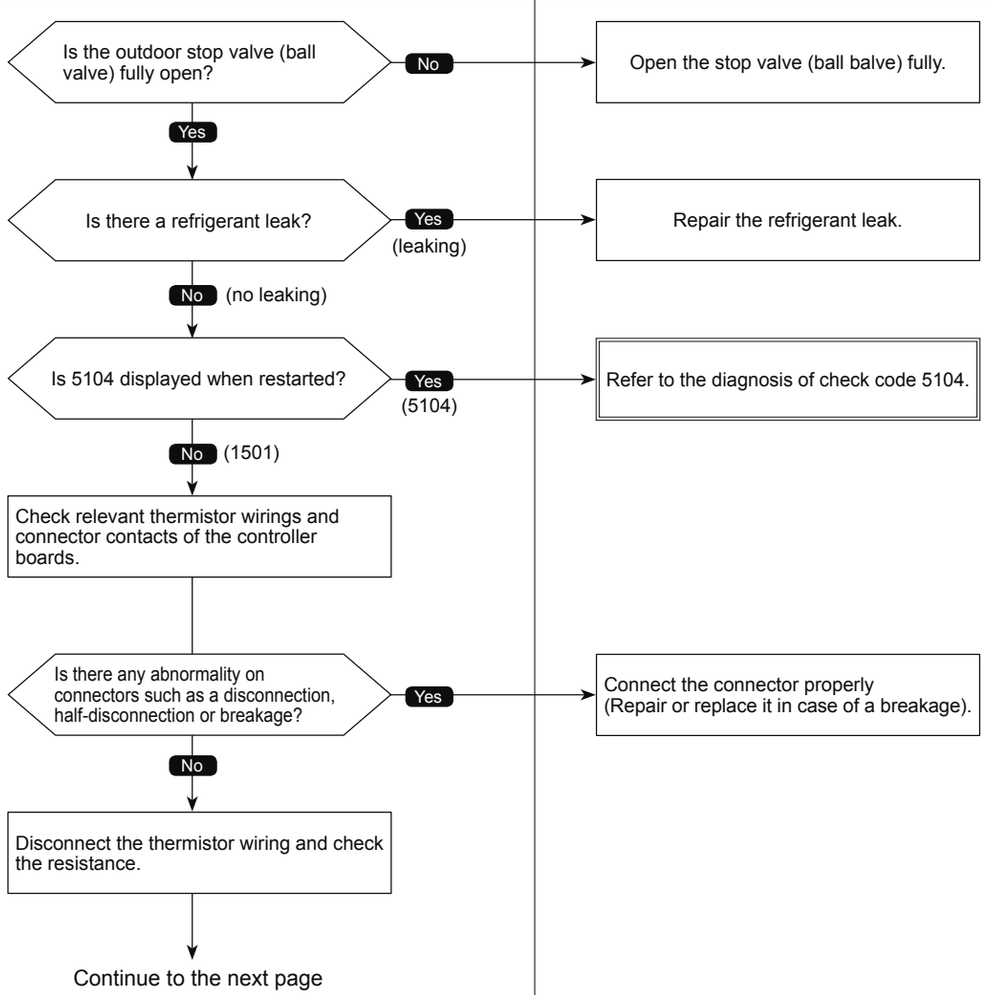

Check code
1501 (U2)

Refrigerant shortage trouble

Chart 2 of 2

●Diagnosis of defectives

Make sure to turn the power OFF before connecting/disconnecting any connectors, or replacing boards.

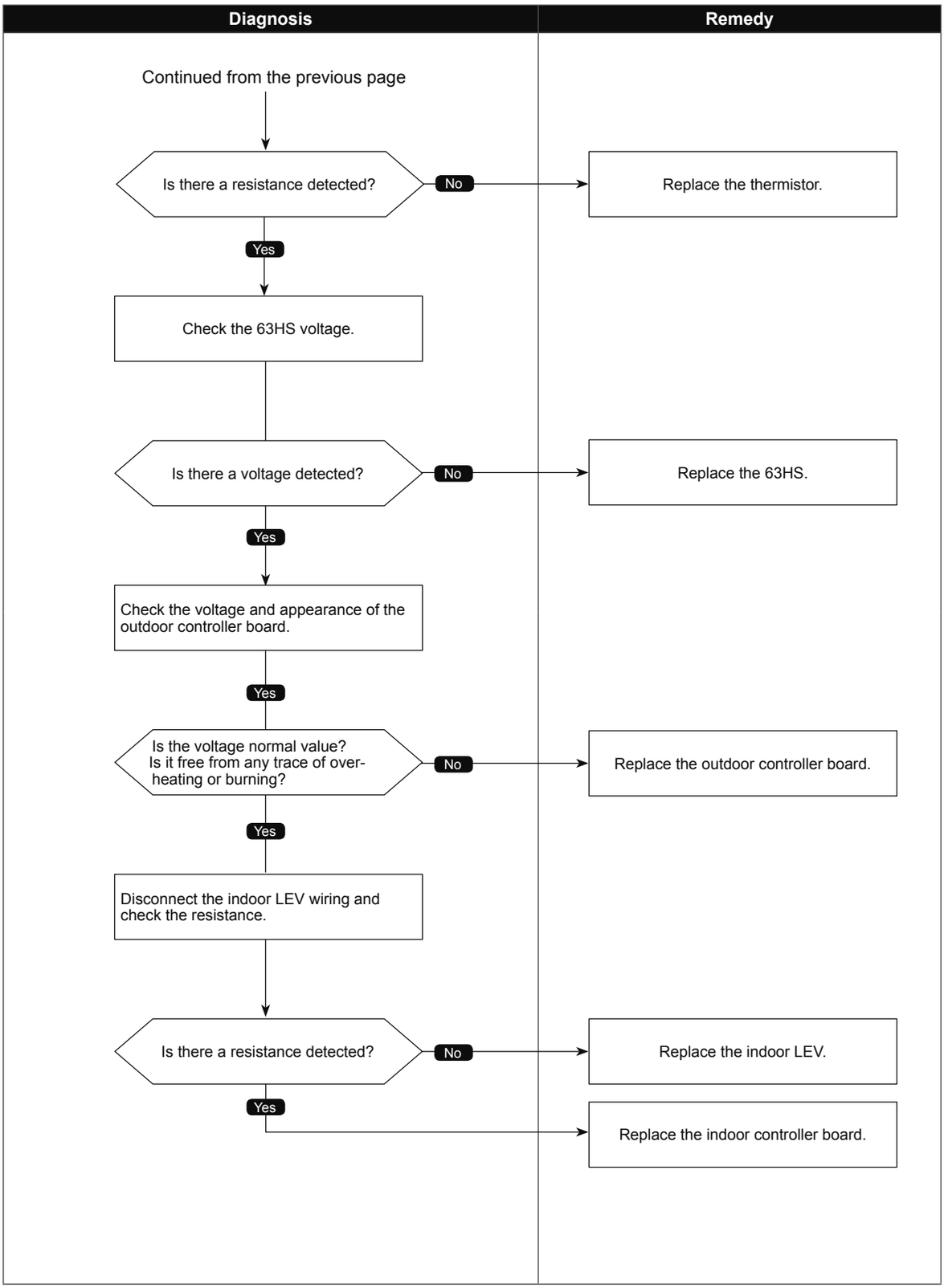

Check code
1501 (U2)

Closed valve in cooling mode

Abnormal points and detection methods	Causes and checkpoints
Abnormal if stop valve is closed during cooling operation. Abnormal when both of the following temperature conditions are satisfied for 20 minutes or more during cooling operation. 1. TH22j − TH21j ≧ −3.6°F [−2°C] 2. TH23j − TH21j ≧ −3.6°F [−2°C] Note: For indoor unit, the abnormality is detected if an operating unit satisfies the condition.	① Outdoor liquid/gas valve is closed. ② Mulfunction of outdoor LEV (LEV-A) (blockage) TH21: Indoor intake temperature thermistor TH22: Indoor liquid pipe temperature thermistor LEV: Electronic expansion valve

●Diagnosis of defectives

Make sure to turn the power OFF before connecting/disconnecting any connectors, or replacing boards.

Diagnosis	Remedy

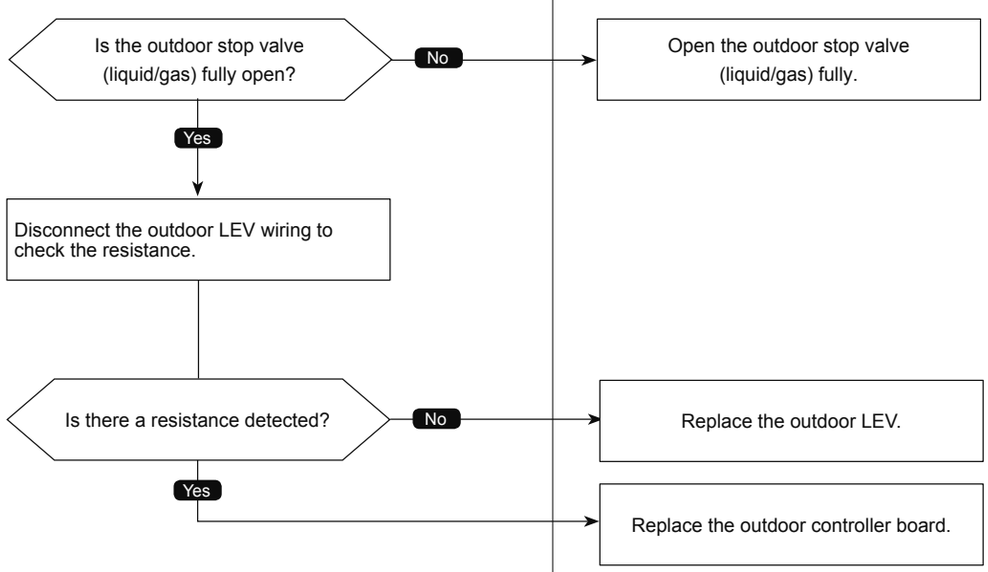

Check code
1508 (EF)

4-way valve trouble in heating mode

Abnormal points and detection methods	Causes and checkpoints
Abnormal if 4-way valve does not operate during heating operation. Abnormal when any of the following temperature conditions is satisfied for 3 minutes or more during heating operation when the outdoor temperature is −4°F [−20°C] or more: 1. TH22j − TH21j ≦ −18°F [−10°C] 2. TH23j − TH21j ≦ −18°F [−10°C] 3. TH22j ≦ 37.4°F [3℃] 4. TH23j ≦ 37.4°F [3℃] Note: For indoor unit, the abnormality is detected if an operating unit satisfies the condition.	①4-way valve failure ②Disconnection or failure of 4-way valve coil ③Clogged drain pipe ④Disconnection or loose connection of connectors ⑤Malfunction of input circuit on outdoor controller board ⑥Defective outdoor power board TH21: Indoor intake temperature thermistor TH22: Indoor liquid pipe temperature thermistor

●Diagnosis of defectives

Make sure to turn the power OFF before connecting/disconnecting any connectors, or replacing boards.

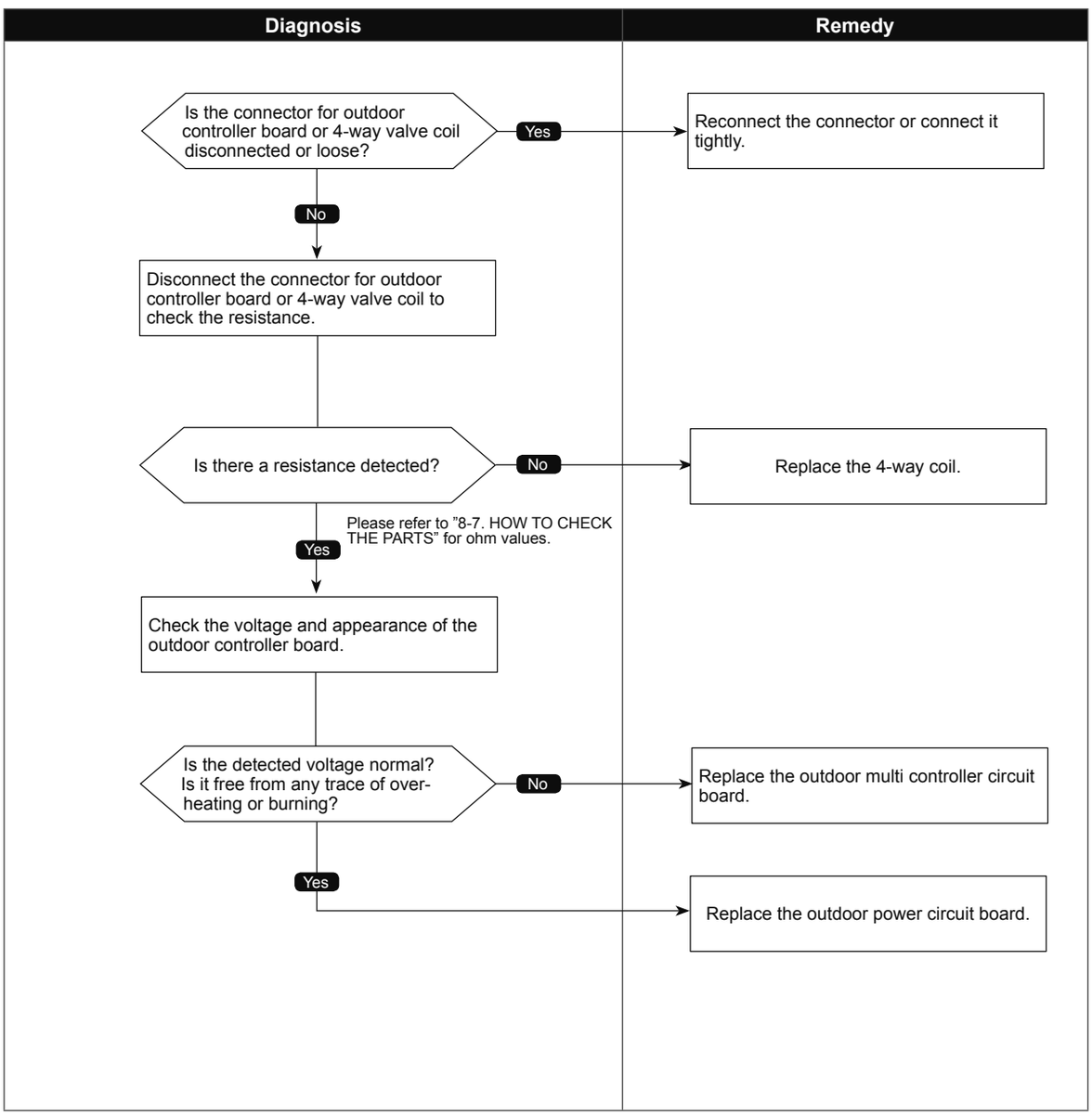

Check code

4100
(UF)

Compressor current interruption (Locked compressor)

Chart 1 of 2

Abnormal points and detection methods	Causes and checkpoints
Abnormal if overcurrent of DC bus or compressor is detected before 30 seconds after the compressor starts operating.	①Closed stop valve ②Decrease of power supply voltage ③Looseness, disconnection, or wrong phase of compressor wiring connection ④Model selection error on indoor controller board or outdoor multi controller circuit board ⑤Defective compressor ⑥Defective outdoor power circuit board

●Diagnosis of defectives

Make sure to turn the power OFF before connecting/disconnecting any connectors, or replacing boards.

Diagnosis	Remedy
Check the stop valve.	
Is the stop valve (liquid/gas) fully open?	No → Open the stop valve (liquid/gas) fully.
Yes	
Check the power supply voltage.	
Is the power supply voltage normal?	No → • Check the looseness, disconnection, or breakage of compressor wiring. • Ensure power supply from the facility. (Check for power supply open phase.)
Yes	
Check if the model selection switch is set correctly on the indoor controller board or outdoor multi controller circuit board.	
Are they set properly?	No → Set the model selection switch correctly, then restart.
Yes	
Turn the power OFF to check for looseness, disconnection, or wrong phase of compressor wiring connection.	
Continue to the next page	

Check code
4100 (UF)

Compressor current interruption (Locked compressor)

Chart 2 of 2

●Diagnosis of defectives

Make sure to turn the power OFF before connecting/disconnecting any connectors, or replacing boards.

Diagnosis	Remedy
Continued from the previous page	
Are they connected properly?	
No	Connect the compressor wiring (U, V and W phase) properly, then turn the power back ON.
Yes	
Check whether the compressor is faulty grounded or not.	
Is the compressor faulty grounded?	
No	Replace the outdoor power circuit board (Defective outdoor power circuit board).
Yes	
	Replace the compressor (Defective compressor).

Check code
4210 (UP)

Compressor overcurrent interruption

Chart 1 of 2

Abnormal points and detection methods	Causes and checkpoints
Abnormal if overcurrent of DC bus or compressor is detected after 30 seconds since the compressor starts operating.	① Closed outdoor stop valve ② Decrease of power supply voltage ③ Looseness, disconnection, or wrong phase of compressor wiring connection ④ Model selection error on indoor controller board or outdoor multi controller circuit board ⑤ Defective compressor ⑥ Defective outdoor power circuit board ⑦ Defective outdoor multi controller circuit board ⑧ Malfunction of indoor/outdoor unit fan ⑨ Short-cycle of indoor/outdoor unit

●Diagnosis of defectives

Make sure to turn the power OFF before connecting/disconnecting any connectors, or replacing boards.

Diagnosis	Remedy

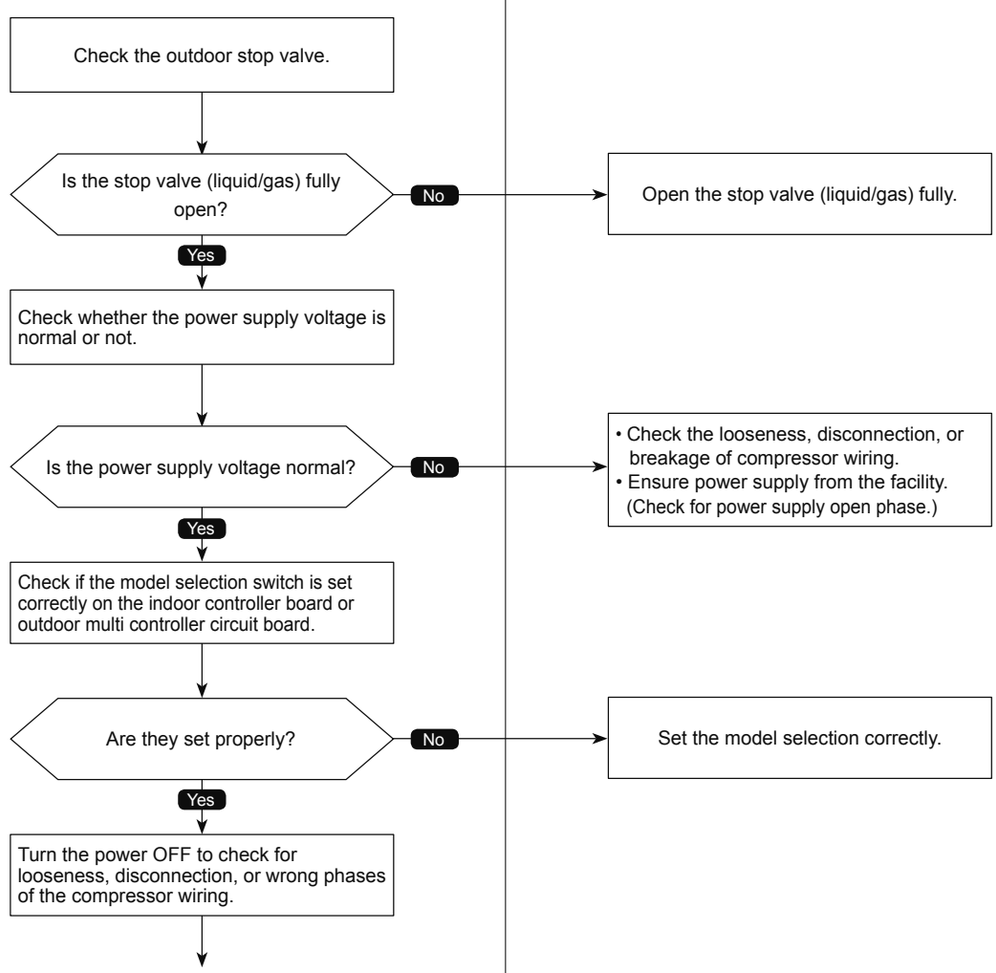

Check code
4210 (UP)

Compressor overcurrent interruption

Chart 2 of 2

●Diagnosis of defectives

Make sure to turn the power OFF before connecting/disconnecting any connectors, or replacing boards.

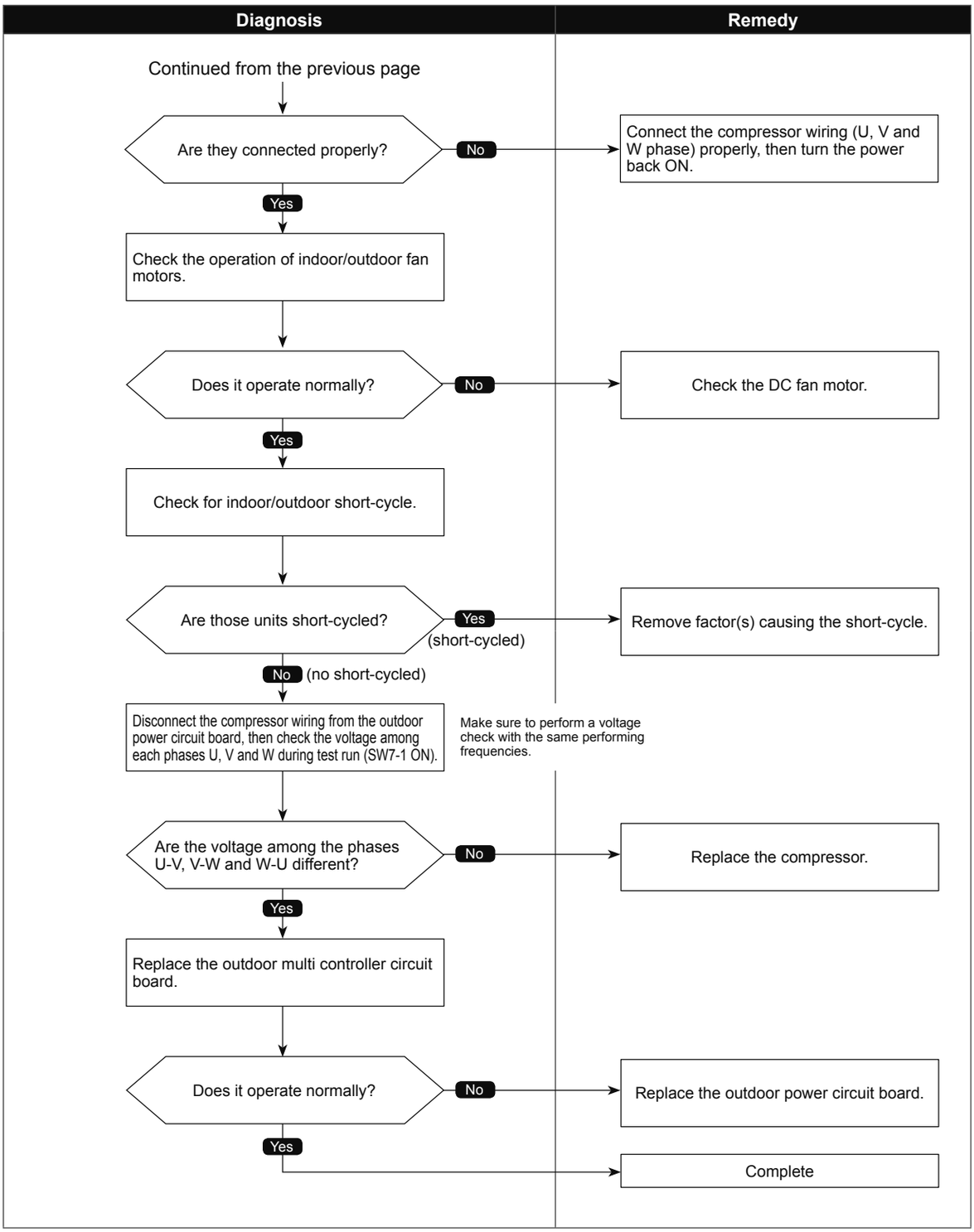

Check code
4220 (U9)

Voltage shortage/Overvoltage/PAM error/L1 open-phase/ Primary current sensor error/Power synchronization signal error

Abnormal points and detection methods	Causes and checkpoints
Abnormal if any of following symptoms are detected; ●Decrease of DC bus voltage to 200 V ●Increase of DC bus voltage to 400 V ●DC bus voltage stays at 310 V or less for consecutive 30 seconds when the operational frequency is over 20 Hz. ●When any of the following conditions is satisfied while the detection value of primary current is 0.1 A or less. 1. The operational frequency is 40 Hz or more. 2. The compressor current is 6 A or more.	① Decrease/increase of power supply voltage. ② Primary current sensor failure ③ Disconnection of compressor wiring ④ Malfunction of 52C ⑤ Disconnection or contact failure of CN52C ⑥ Defective outdoor power circuit board ⑦ Malfunction of 52C driving circuit on outdoor multi controller circuit board ⑧ Disconnection of CN5 ⑨ Disconnection of CN2 ⑩ Malfunction of primary current detecting circuit on outdoor power circuit board

●Diagnosis of defectives

Make sure to turn the power OFF before connecting/disconnecting any connectors, or replacing boards.

The black square (■) indicates a switch position.

Diagnosis | **Remedy**

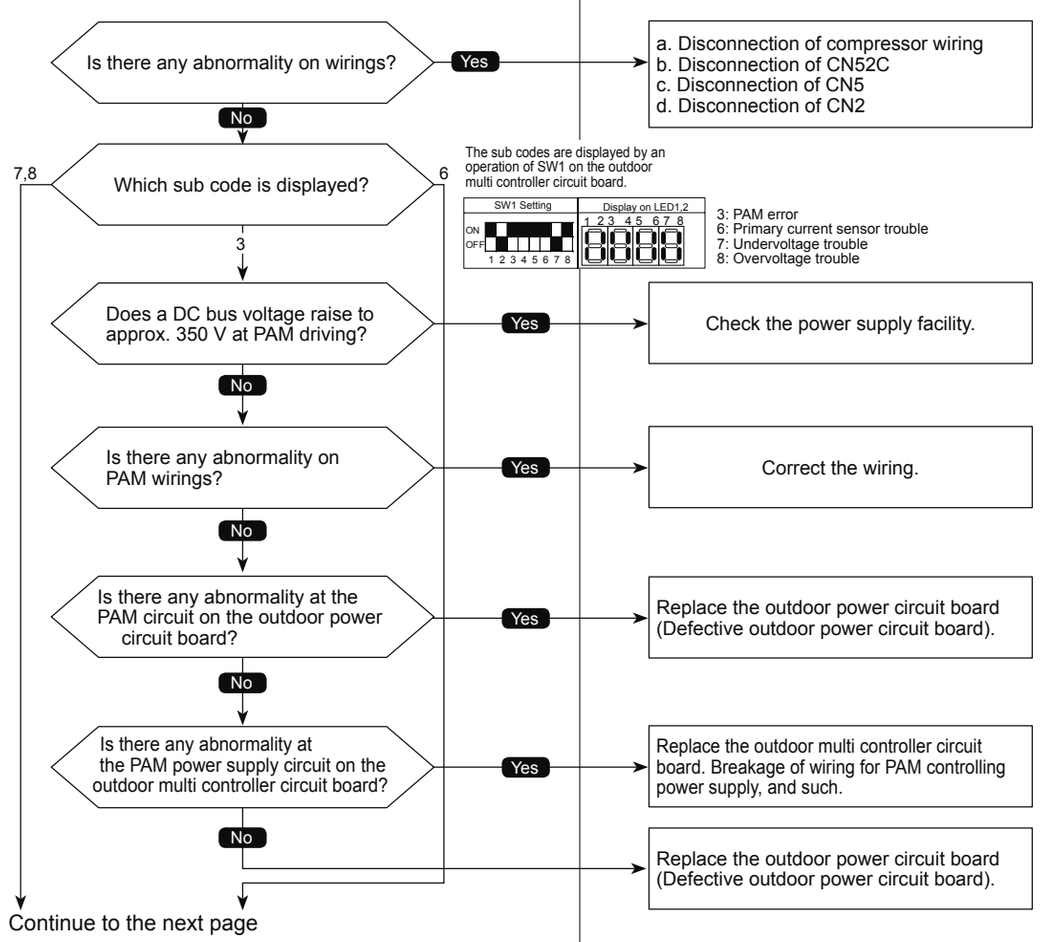

Check code
4220 (U9)

Voltage shortage/Overvoltage/PAM error/L1 open-phase/ Primary current sensor error/Power synchronization signal error

●Diagnosis of defectives

Make sure to turn the power OFF before connecting/disconnecting any connectors, or replacing boards.

The black square (■) indicates a switch position.

Diagnosis	Remedy

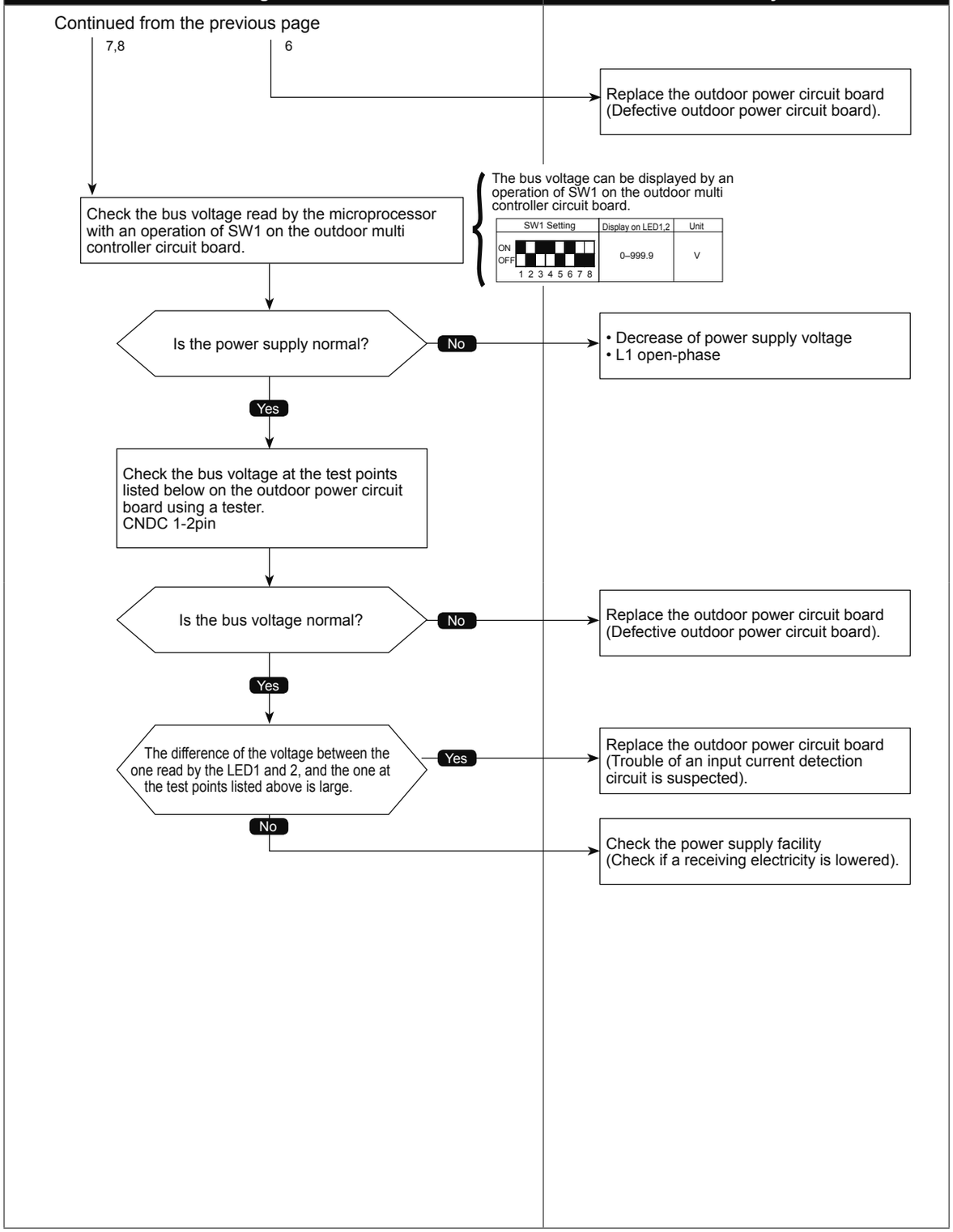

Check code

4230
(U5)

Heat sink temperature trouble

Abnormal points and detection methods	Causes and checkpoints
Abnormal if TH8 detects a temperature outside the specified range during compressor operation. TH8: Thermistor <Heat sink>	①Blocked outdoor fan ②Malfunction of outdoor fan motor ③Blocked airflow path ④Rise of ambient temperature ⑤Characteristic defect of thermistor ⑥Malfunction of input circuit on outdoor power board ⑦Malfunction of outdoor fan driving circuit

●Diagnosis of defectives

Make sure to turn the power OFF before connecting/disconnecting any connectors, or replacing boards.

Diagnosis | **Remedy**

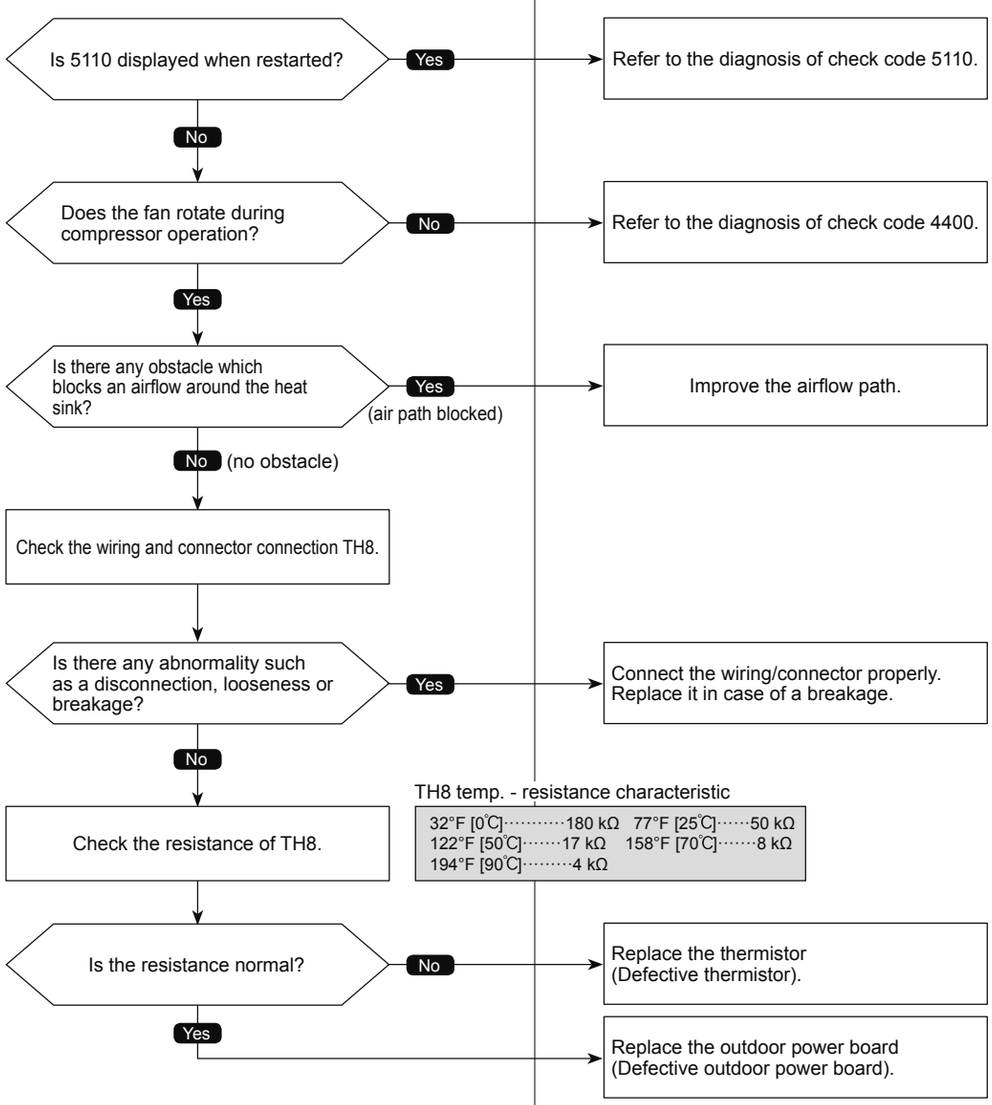

Check code

4250
(U6)

Power module trouble

Abnormal points and detection methods	Causes and checkpoints
Abnormal if both of the following conditions are satisfied: 1. Overcurrent of DC bus or compressor is detected during compressor operation. 2. Inverter power module is determined to be defected.	① Short-circuit caused by looseness or disconnection of compressor wiring ② Defective compressor ③ Defective outdoor power circuit board

●Diagnosis of defectives

Make sure to turn the power OFF before connecting/disconnecting any connectors, or replacing boards.

Diagnosis

Turn the power OFF to check for looseness or disconnection of the compressor wiring.

↓

Are they connected properly?

- No → Connect the compressor wiring (U, V and W phase) properly, then turn the power back ON.
- Yes ↓

① Disconnect the compressor wiring (U-V-W phase).
② Turn ON the SW7-1(*) on the outdoor multi controller circuit board.
③ Operate the unit.

* SW7-1 ON: Ignore 5300(UH) error.

↓

Is the check code <4250> still displayed?

- No → Replace the compressor (Defective compressor).
- Yes → Replace the outdoor power circuit board or the outdoor multi controller circuit board (Defective outdoor power circuit board).

Remedy

Check code
4400 (U8)

Fan trouble

Abnormal points and detection methods	Causes and checkpoints
Abnormal if no rotational frequency is detected, or detected a value outside the specified range during fan motor operation.	① Malfunction of fan motor ② Disconnection of CNF connector ③ Defective outdoor controller board

●Diagnosis of defectives

Make sure to turn the power OFF before connecting/disconnecting any connectors, or replacing boards.

Diagnosis

Check the fuse on the outdoor controller board.

Is the fuse melting?

- Yes (Melting) → Replace the outdoor controller board. Replace the defective fan motor.*
- No (Not melting) ↓

*For the detail, refer to "Check method of DC fan motor (fan motor/outdoor multi controller circuit board" in chapter 8-7.

Check the fan motor connector (CNF1 and CNF2) for a disconnection or looseness.

Is there any abnormality such as a disconnection, looseness or breakage?

- Yes → Connect the wiring/connector properly. Replace it in case of a breakage.
- No ↓

Remove the fan motor by disconnecting the fan motor connector CNF1 and CNF2, then check the voltage of outdoor controller board
"Test points are;
①V_{DC} approx. 280 to 380 V DC (fan connector 1–4)
②V_{CC} approx. 15 V DC (fan connector 5–4)"

Is the voltage normal?

- No → Replace the outdoor controller board.
- Yes → Replace the fan motor.

Check code
5101 (U3)

Compressor temperature thermistor (TH4) open/short

<Detected in outdoor unit>

Abnormal points and detection methods	Causes and checkpoints
Abnormal if TH4 detects to be open/short. (The open/short detection is disabled for 10 minutes after compressor starts, during defrosting operation, or for 10 minutes after returning from the defrosting operation. The detection is also disabled when the outdoor temperature is 41°F [5°C] or less in cooling operation, and −4°F [−20°C] or less in heating.) Open: 37.4°F [3℃] or less Short: 422.6°F [217℃] or more TH4: Thermistor <Compressor>	① Disconnection or contact failure of connectors ② Characteristic defect of thermistor ③ Defective outdoor controller board

●Diagnosis of defectives

Make sure to turn the power OFF before connecting/disconnecting any connectors, or replacing boards.

The black square (■) indicates a switch position.

Diagnosis | **Remedy**

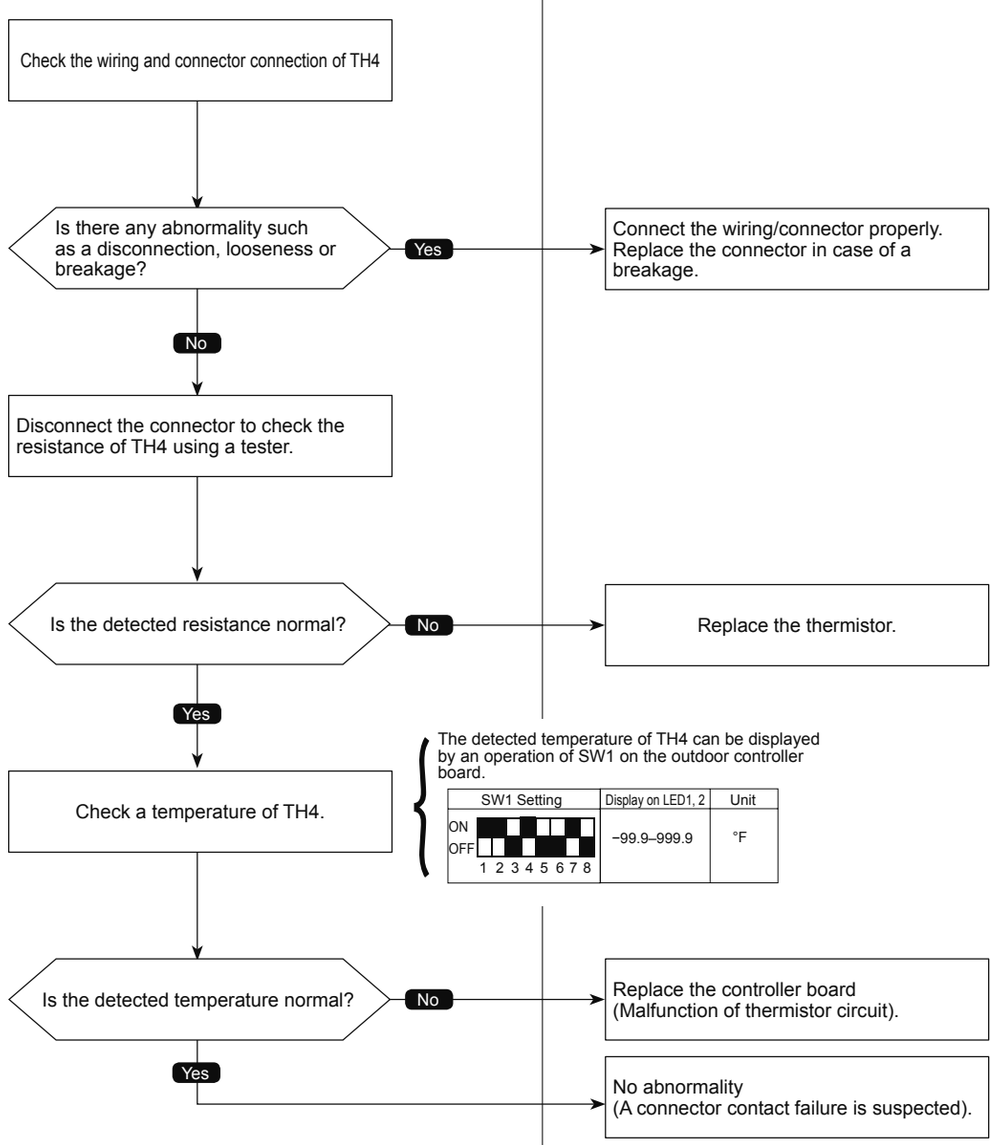

Check code

5102
(U4)

Suction pipe temperature thermistor (TH6) open/short

<Detected in outdoor unit>

Abnormal points and detection methods	Causes and checkpoints
Abnormal if TH6 detects to be open/short. (The open/short detection is disabled during 10 seconds to 10 minutes. after compressor starts, during defrosting operation, or for 10 minutes after returning from the defrosting operation.) Open: −40°F [−40℃] or less Short: 194°F [90℃] or more TH6: Thermistor <Suction pipe>	① Disconnection or contact failure of connectors ② Characteristic defect of thermistor ③ Defective outdoor controller board

●Diagnosis of defectives

Make sure to turn the power OFF before connecting/disconnecting any connectors, or replacing boards.

The black square (■) indicates a switch position.

Diagnosis | **Remedy**

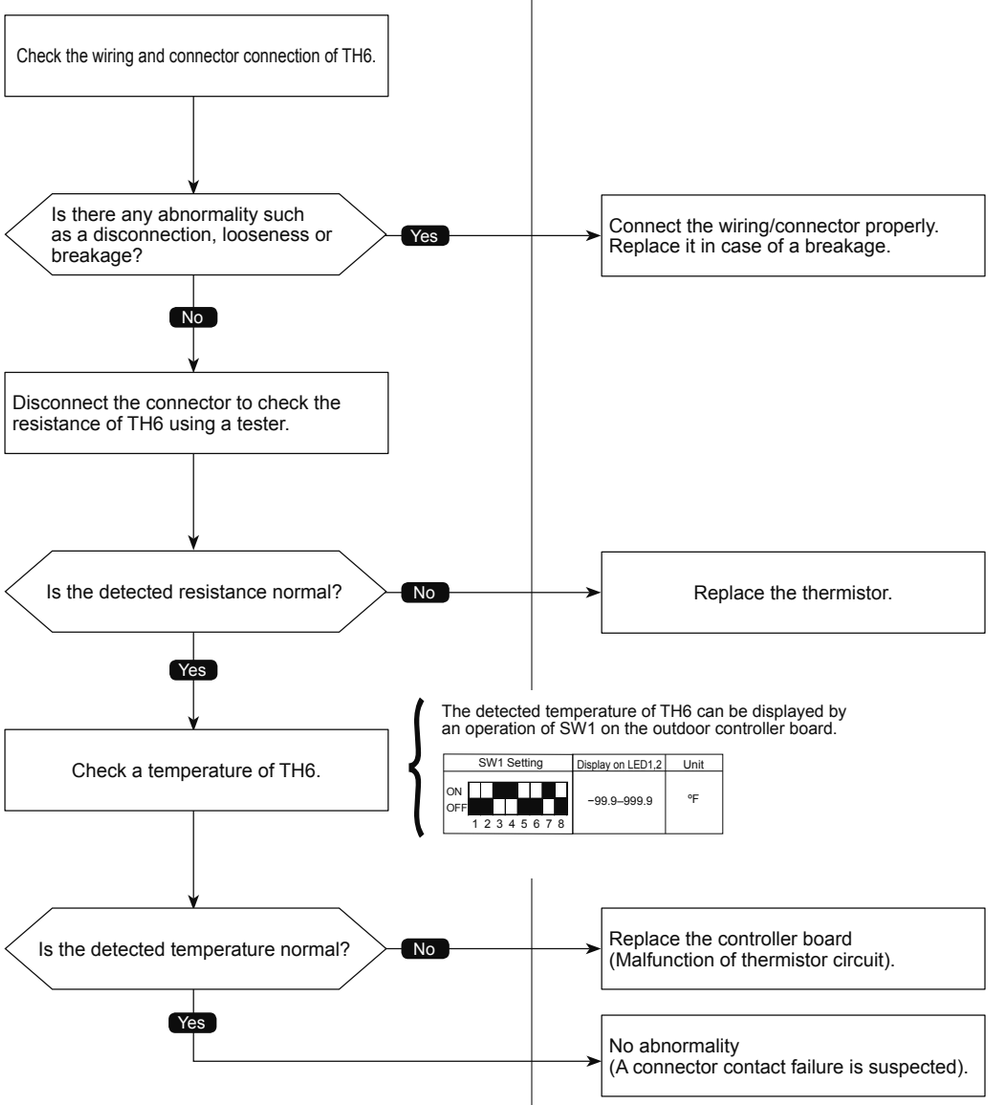

Check code

5105
(U4)

Outdoor liquid pipe temperature thermistor (TH3) open/short

Abnormal points and detection methods	Causes and checkpoints
Abnormal if TH3 detects to be open/short. (The open/short detection is disabled during 10 seconds to 10 minutes. after compressor starts, during defrosting operation, or for 10 minutes after returning from the defrosting operation.) Open: −40°F [−40℃] or less Short: 194°F [90℃] or more TH3: Thermistor <Outdoor liquid pipe>	① Disconnection or contact failure of connectors ② Characteristic defect of thermistor ③ Defective outdoor controller board

●Diagnosis of defectives

Make sure to turn the power OFF before connecting/disconnecting any connectors, or replacing boards.

The black square (■) indicates a switch position.

Diagnosis | **Remedy**

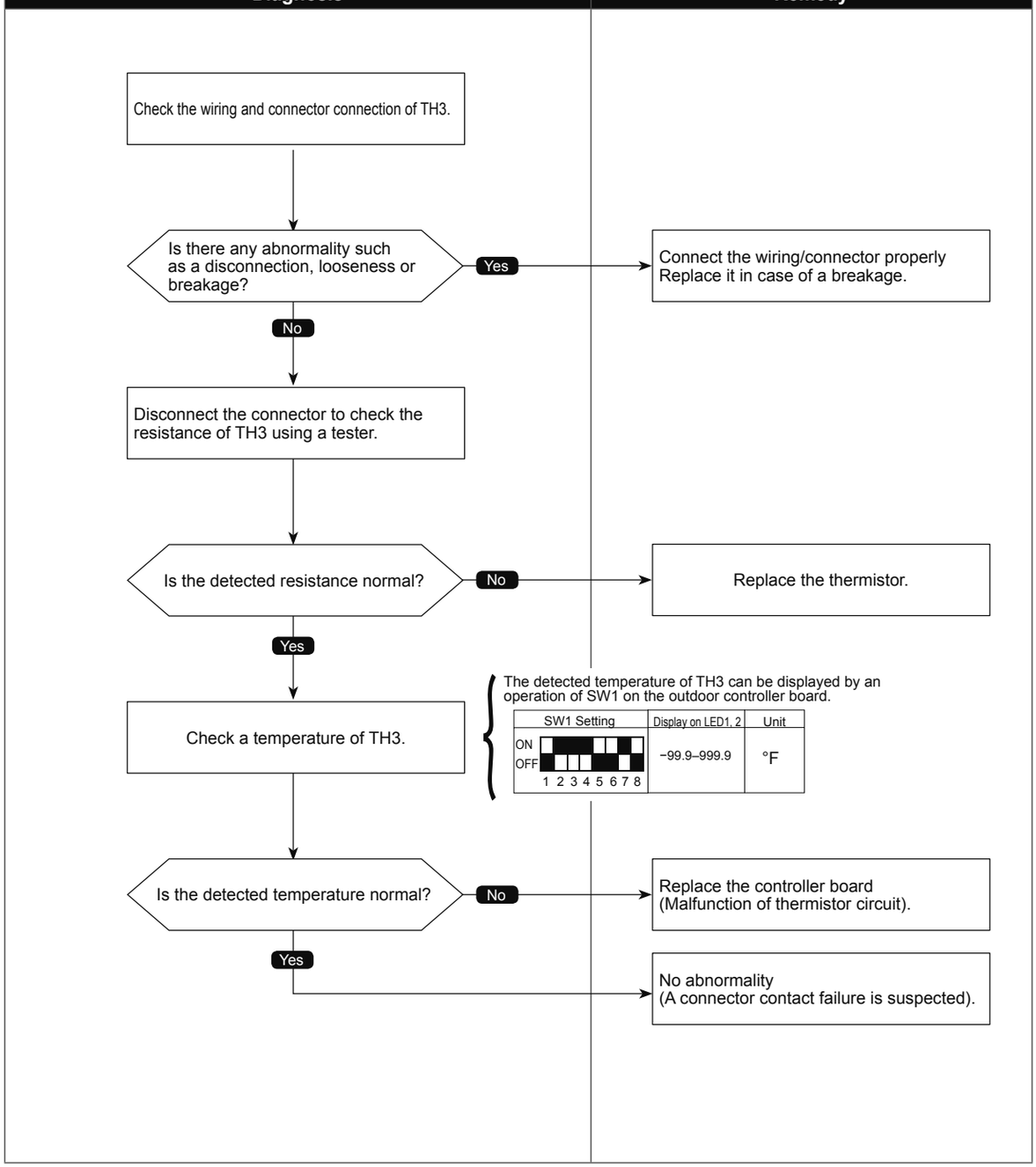

Check code

5106
(U4)

Ambient temperature thermistor (TH7) open/short

Abnormal points and detection methods	Causes and checkpoints
Abnormal if TH7 detects to be open/short Open: −40°F [−40℃] or less Short: 194°F [90℃] or more TH7: Thermistor <Ambient>	① Disconnection or contact failure of connectors ② Characteristic defect of thermistor ③ Defective outdoor controller board

●Diagnosis of defectives

Make sure to turn the power OFF before connecting/disconnecting any connectors, or replacing boards.

The black square (■) indicates a switch position.

Diagnosis | **Remedy**

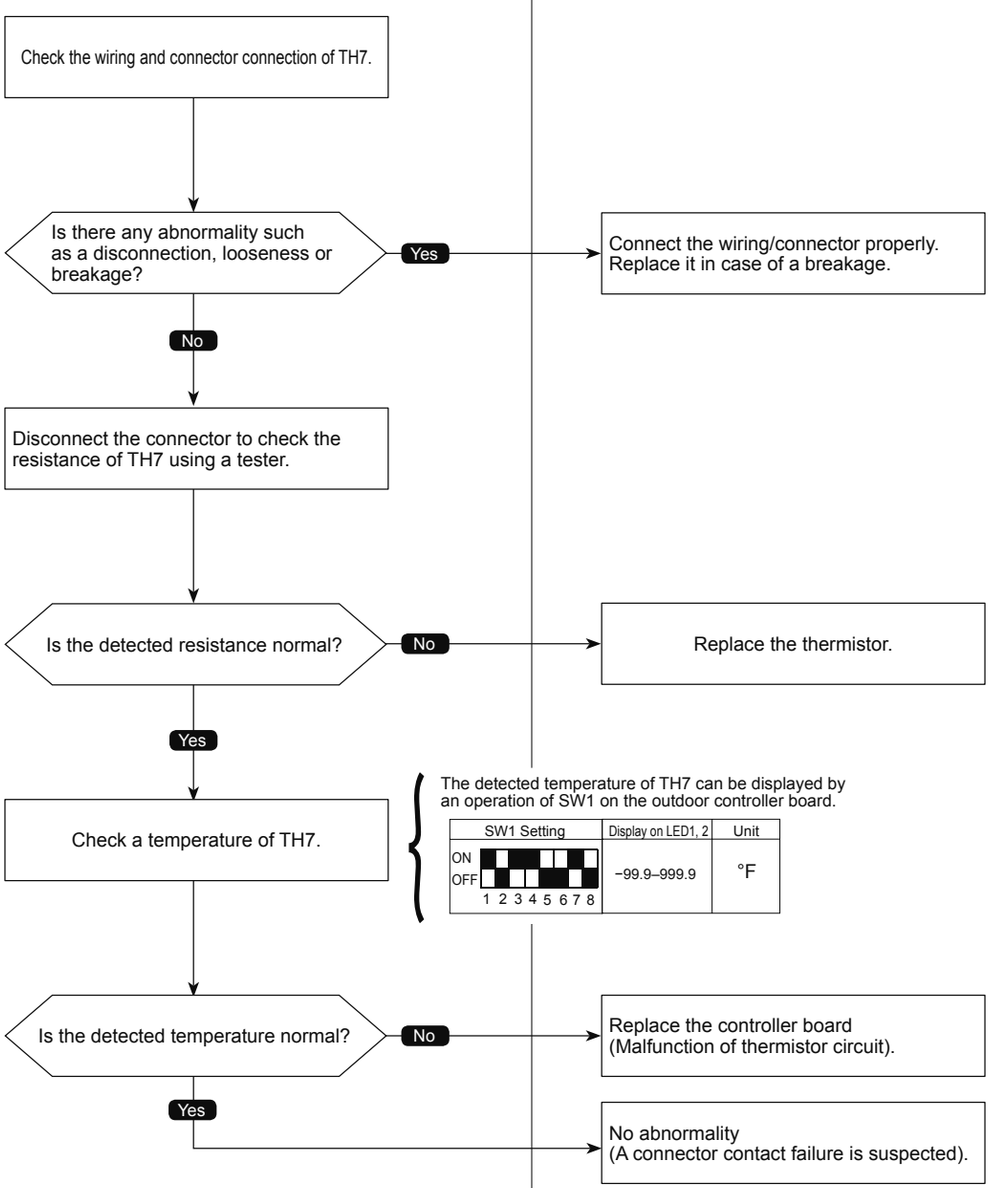

Check code

5109
(U4)

HIC pipe temperature thermistor (TH2) open/short

Abnormal points and detection methods	Causes and checkpoints
Abnormal if TH2 detects to be open/short. Open: −40°F [−40℃] or less Short: 194°F [90℃] or more TH2: Thermistor <HIC pipe>	① Disconnection or contact failure of connectors ② Characteristic defect of thermistor ③ Defective outdoor controller board

●Diagnosis of defectives

Make sure to turn the power OFF before connecting/disconnecting any connectors, or replacing boards.

The black square (■) indicates a switch position.

Diagnosis | **Remedy**

Check the wiring and connector connection of TH2.

Is there any abnormality such as a disconnection, looseness or breakage?

- Yes → Connect the wiring/connector properly. Replace it in case of a breakage.
- No ↓

Disconnect the connector to check the resistance of TH2 using a tester.

Is the detected resistance normal?

- No → Replace the thermistor.
- Yes ↓

Check a temperature of TH2.

The detected temperature of TH2 can be displayed by an operation of SW1 on the outdoor controller board.

SW1 Setting	Display on LED1,2	Unit
ON / OFF 1 2 3 4 5 6 7 8	−99.9–999.9	°F

Is the detected temperature normal?

- No → Replace the controller board (Malfunction of thermistor circuit).
- Yes → No abnormality (A connector contact failure is suspected.)

Check code

5110
(U4)

Heat sink temperature thermistor(TH8) open/short

Abnormal points and detection methods	Causes and checkpoints
Abnormal if TH8 detects to be open/short. Open: −31.2°F [−35.1℃] or less Short: 338.5°F [170.3℃] or more TH8: Thermistor <Heat sink>	① Disconnection or contact failure of connectors ② Characteristic defect of thermistor ③ Defective outdoor controller board

●Diagnosis of defectives

Make sure to turn the power OFF before connecting/disconnecting any connectors, or replacing boards.

The black square (■) indicates a switch position.

Diagnosis | **Remedy**

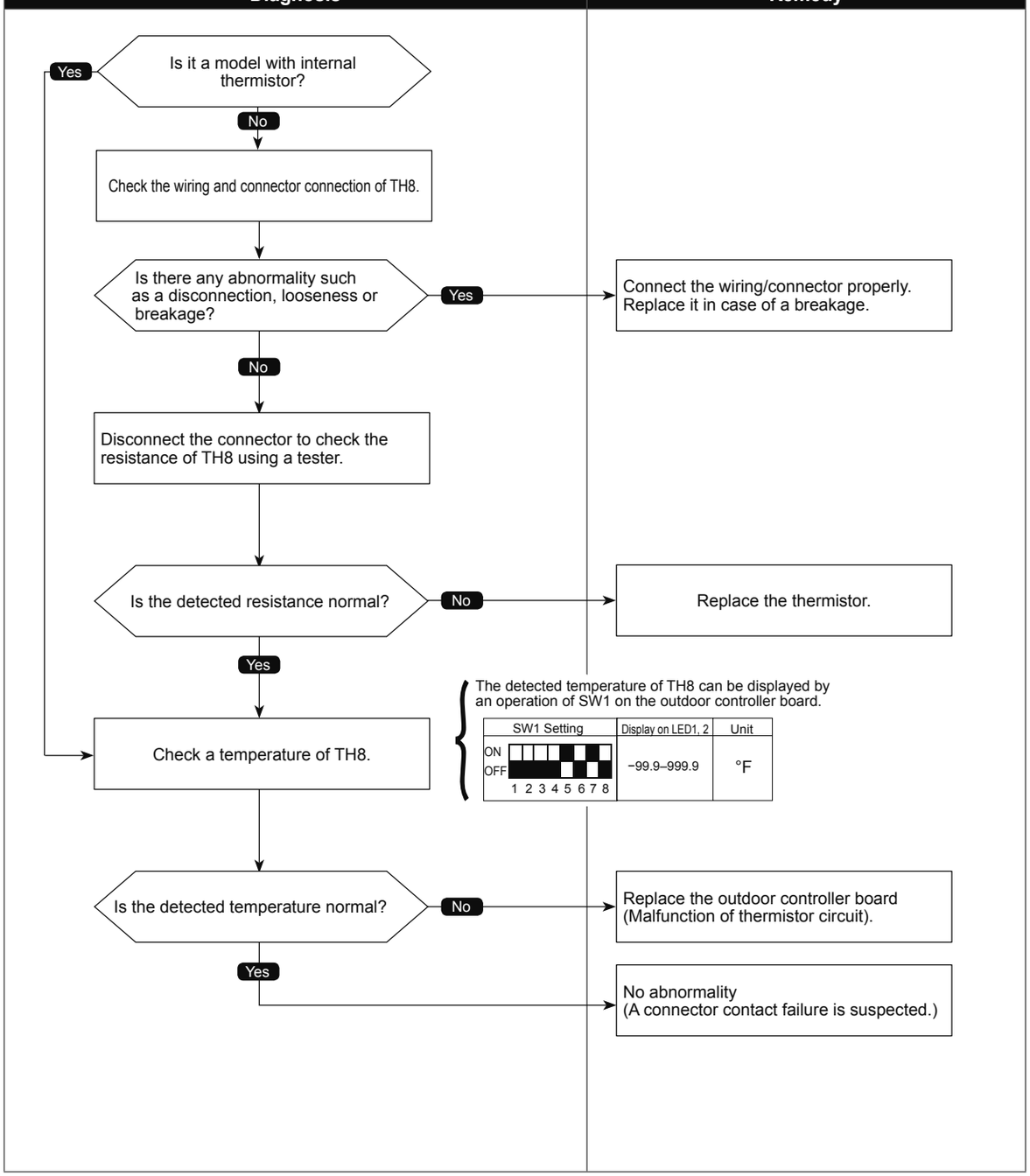

Check code

5201
(F5)

High pressure sensor (63HS) trouble

Abnormal points and detection methods	Causes and checkpoints
①When the detected pressure in the high pressure sensor is 14 PSIG or less during operation, the compressor stops operation and enters into an anti-restart mode for 3 minutes. ②When the detected pressure is 14 PSIG or less immediately before restarting, the compressor falls into an abnormal stop with a check code <5201>. ③For 3 minutes after compressor restarting, during defrosting operation, and for 3 minutes after returning from defrosting operation, above mentioned symptoms are not determined as abnormal.	①Defective high pressure sensor ②Decrease of internal pressure caused by gas leakage ③Disconnection or contact failure of connector ④Malfunction of input circuit on outdoor controller board

●Diagnosis of defectives

Make sure to turn the power OFF before connecting/disconnecting any connectors, or replacing boards.

The black square (■) indicates a switch position.

Diagnosis | **Remedy**

63HS: High pressure sensor

Check the wiring and connector connection.

Is there any abnormality such as a disconnection, looseness or breakage?

Yes → Connect the wiring/connector properly. Replace it in case of a breakage.

No

Check an internal pressure of the refrigerant circuit.

Is the detected internal pressure normal?

No → Check the refrigerant circuit, and refill refrigerant after repairing the leakage.

Yes

Check the detected pressure in 63HS(*), then compare it with the internal pressure.

The detected pressure in 63HS can be displayed by an operation of SW1 on the outdoor controller board.

SW1 Setting	Display on LED1, 2	Unit
ON / OFF 1 2 3 4 5 6 7 8	−99.9–999.9	PSIG

*For the pressure, refer to "8-8.HOW TO CHECK THE COMPONENTS".

Is the detected pressure normal?

No → Replace the 63HS.

→ Replace the outdoor controller board.

Check code
5202 (F3)

Low pressure sensor (63LS) trouble

Abnormal points and detection methods	Causes and checkpoints
① When the detected pressure in the low pressure sensor is −33 PSIG or less, or 329 PSIG or more during operation, the compressor stops operation with a check code <5202>. ② For 3 minutes after compressor restarting, during defrosting operation, and for 3 minutes after returning from defrosting operation, above mentioned symptoms are not determined as abnormal.	① Defective low pressure sensor ② Decrease of internal pressure caused by gas leakage ③ Disconnection or contact failure of connector ④ Malfunction of input circuit on outdoor controller board

●Diagnosis of defectives

Make sure to turn the power OFF before connecting/disconnecting any connectors, or replacing boards.

The black square (■) indicates a switch position.

Diagnosis	Remedy

63LS: Low pressure sensor

Check the wiring and connector connection.

Is there any abnormality such as a disconnection, looseness or breakage?

- Yes → Connect the wiring/connector properly. Replace it in case of a breakage.
- No ↓

Check an internal pressure of the refrigerant circuit.

Is the detected internal pressure normal?

- No → Check the refrigerant circuit, and refill refrigerant after repairing the leakage.
- Yes ↓

Check the detected pressure in 63LS, then compare it with the internal pressure.

The detected pressure in 63LS can be displayed by an operation of SW1 on the outdoor controller board.

SW1 Setting	Display on LED1,2	Unit
ON / OFF 1 2 3 4 5 6 7 8	−99.9–999.9	PSIG

Is the detected pressure normal?

- No → Replace the 63LS.
- → Replace the outdoor controller board.

Check code

5300
(UH)

Primary current error

Abnormal points and detection methods	Causes and checkpoints
Abnormal if any of the following conditions is detected: ① Primary current sensor detects any of the following conditions (single phase unit only): 10 consecutive-second detection: 34 A One-time detection: 38 A ② Secondary current sensor detects 25 A or more. ③ Secondary current sensor detects 1.0 A or less.	① Decrease/trouble of power supply voltage ② Disconnection of compressor wiring ③ Current sensor trouble on outdoor power circuit board ④ Wiring through current sensor (penetration type) is not done.

●Diagnosis of defectives

Make sure to turn the power OFF before connecting/disconnecting any connectors, or replacing boards.

Diagnosis / Remedy

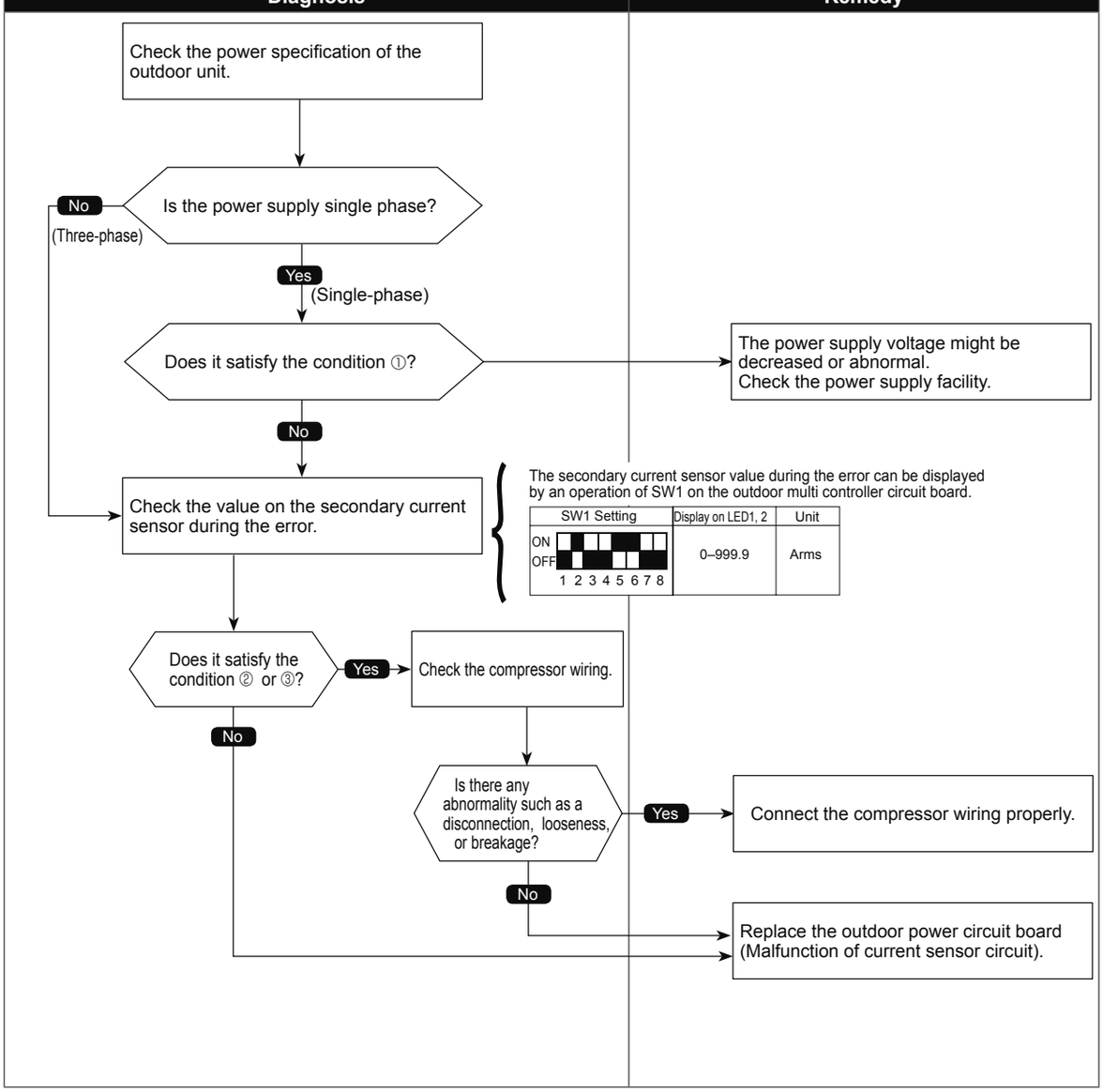

Check code
6600 (A0)

Duplex address error

Abnormal points and detection methods	Causes and checkpoints
Abnormal if 2 or more units with the same address are existing.	① There are 2 units or more with the same address in their controller among outdoor unit, indoor unit, Fresh Master, Lossnay or remote controller ② Noise interference on indoor/outdoor connectors

●Diagnosis of defectives

Make sure to turn the power OFF before connecting/disconnecting any connectors, or replacing boards.

Diagnosis	Remedy

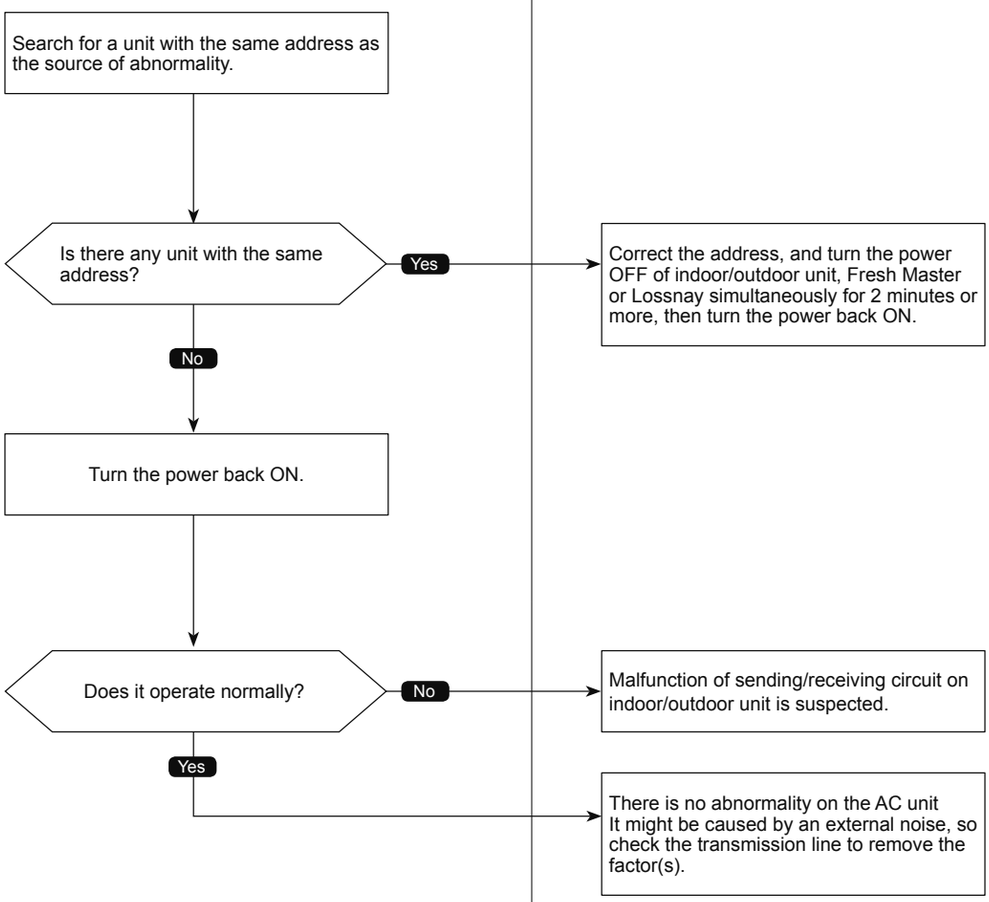

Check code
6602 (A2)

Transmission processor hardware error

Abnormal points and detection methods	Causes and checkpoints
Abnormal if the transmission line shows "1" although the transmission processor transmitted "0".	① A transmitting data collision occurred because of a wiring work or polarity change has performed while the power is ON on either of the indoor/outdoor unit, Fresh Master or Lossnay ② Malfunction of transmitting circuit on transmission processor ③ Noise interference on indoor/outdoor connectors

●Diagnosis of defectives

Make sure to turn the power OFF before connecting/disconnecting any connectors, or replacing boards.

Diagnosis	Remedy

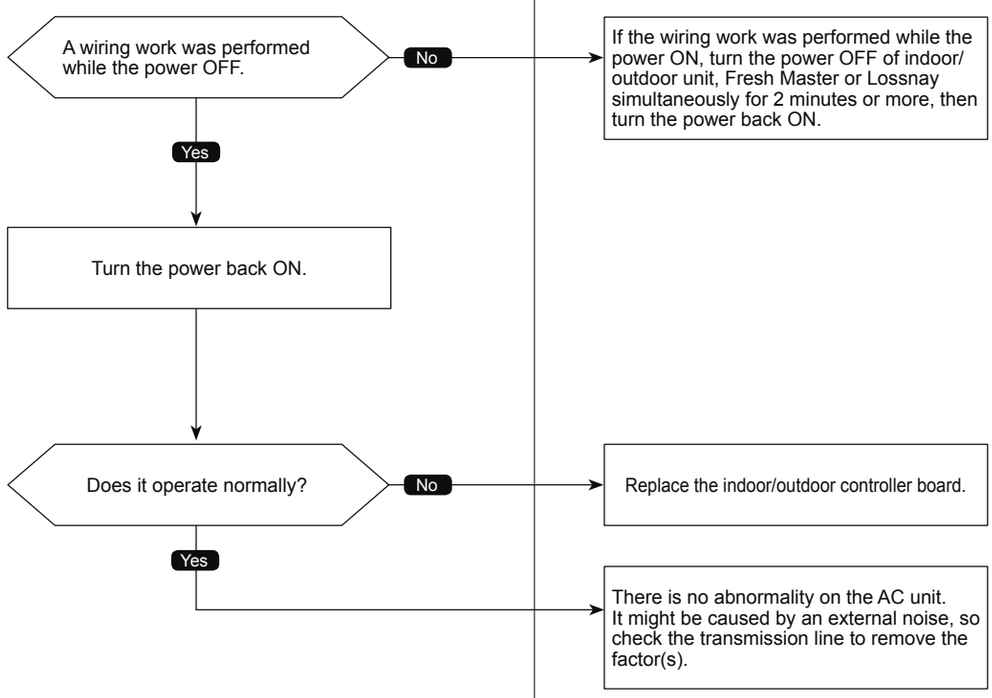

Check code
6603 (A3)

Transmission bus BUSY error

Abnormal points and detection methods	Causes and checkpoints
① Over error by collision Abnormal if no-transmission status caused by a transmitting data collision is consecutive for 8 to 10 minutes. ② Abnormal if a status, that data is not allowed on the transmission line because of noise and such, is consecutive for 8 to 10 minutes.	① The transmission processor is unable to transmit due to a short-cycle voltage such as noise is mixed on the transmission line. ② The transmission processor is unable to transmit due to an increase of transmission data amount caused by a miswiring of the terminal block (transmission line) (TB3) and the terminal block (centralized control line) (TB7) on the outdoor unit. ③ The share on transmission line becomes high due to a mixed transmission caused by a malfunction of repeater on the outdoor unit, which is a function to connect/disconnect transmission from/to control system and centralized control system.

●Diagnosis of defectives

Make sure to turn the power OFF before connecting/disconnecting any connectors, or replacing boards.

Diagnosis	Remedy

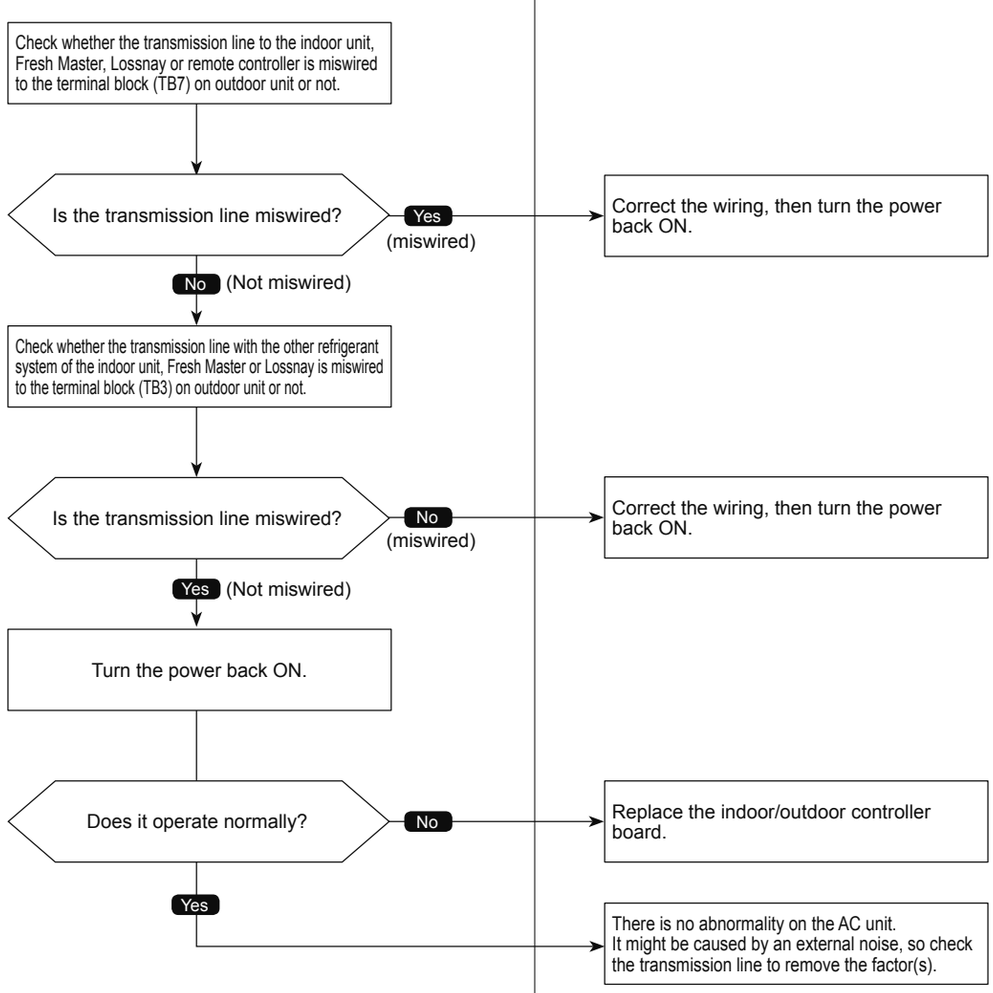

Check code

6606
(A6)

Signal communication error with transmission processor

Abnormal points and detection methods	Causes and checkpoints
① Abnormal if the data of unit/transmission processor were not normally transmitted. ② Abnormal if the address transmission from the unit processor was not normally transmitted.	① Accidental disturbance such as noise or lightning surge ② Hardware malfunction of transmission processor

●Diagnosis of defectives

Make sure to turn the power OFF before connecting/disconnecting any connectors, or replacing boards.

Diagnosis	Remedy

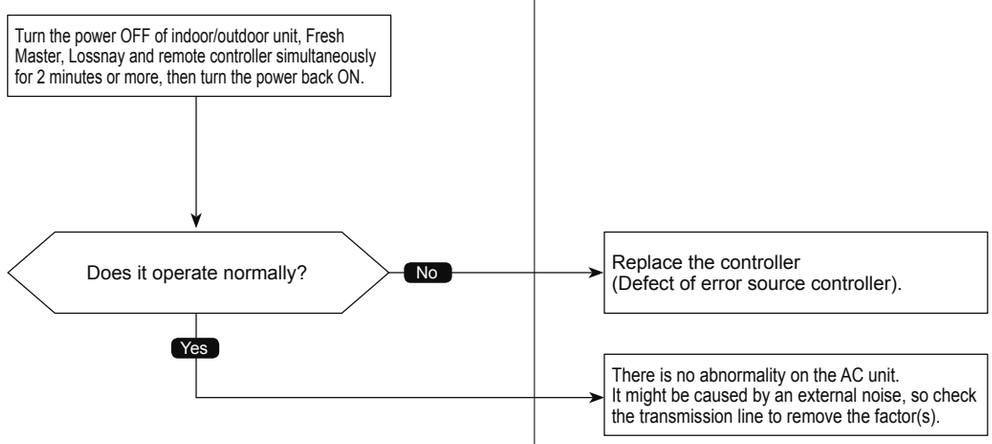

Check code
6607 (A7)

No ACK error

Abnormal points and detection methods	Causes and checkpoints
① Represents a common error detection An abnormality detected by the sending side controller when receiving no ACK from the receiving side, though signal was once sent. The sending side searches the error in 30 seconds interval for 6 times continuously.	① The previous address unit does not exist since the address switch was changed while in electric continuity status. ② Decline of transmission voltage/signal caused by tolerance over on transmission line ·At the furthest end: 656 ft [200 m] ·On remote controller line: 39 ft [12 m] ③ Decline of transmission voltage/ signal due to unmatched transmission line types ·Types for shield line: CVVS, CPEVS, or MVVS ·Line diameter: AWG 16 [1.25 ㎟] ④ Decline of transmission voltage/ signal due to excessive number of connected units ⑤ Malfunction due to accidental disturbance such as noise or lightning surge ⑥ Defect of error source controller
② The cause of displayed address and attribute is on the outdoor unit side. An abnormality detected by the indoor unit if receiving no ACK when transmitting signal from the indoor unit to the outdoor unit.	① Contact failure of indoor/outdoor unit transmission line ② Disconnection of transmission connector (CN2M) on indoor unit ③ Malfunction of sending/receiving circuit on indoor/ outdoor unit
③ The cause of displayed address and attribute is on the indoor unit side. An abnormality detected by the remote controller if receiving no ACK when sending data from the remote controller to the indoor unit.	① While operating with multi refrigerant system indoor units, an abnormality is detected when the indoor unit transmit signal to the remote controller during the other refrigerant-system outdoor unit is turned OFF, or within 2 minutes after it turned back ON. ② Contact failure of indoor unit or remote controller transmission line ③ Disconnection of transmission connector (CN2M) on indoor unit ④ Malfunction of sending/receiving circuit on indoor unit or remote controller
④ The cause of the displayed address and attribute is on the remote controller side An abnormality detected by the indoor unit if receiving no ACK when transmitting signal from the indoor unit to the remote controller.	① While operating with multi refrigerant system indoor units, an abnormality is detected when the indoor unit transmit signal to the remote controller during the other refrigerant-system outdoor unit is turned OFF, or within 2 minutes after it turned back ON. ② Contact failure of indoor unit or remote controller transmission line ③ Disconnection of transmission connector (CN2M) on indoor unit ④ Malfunction of sending/receiving circuit on indoor unit or remote controller

Check code

6607
(A7)

No ACK error

Chart 2 of 4

Abnormal points and detection methods	Causes and checkpoints
⑤ The cause of displayed address and attribute is on the Fresh Master side. An abnormality detected by the indoor unit if receiving no ACK when transmitting signal from the indoor unit to the Fresh Master.	① While the indoor unit is operating with multi refrigerant system Fresh Master, an abnormality is detected when the indoor unit transmits signal to the remote controller while the outdoor unit with the same refrigerant system as the Fresh Master is turned OFF, or within 2 minutes after it turned back ON. ② Contact failure of indoor unit or Fresh Master transmission line ③ Disconnection of transmission connector (CN2M) on indoor unit or Fresh Master ④ Malfunction of sending/receiving circuit on indoor unit or Fresh Master
⑥ The cause of displayed address and attribute is on Lossnay side. An abnormality detected by the indoor unit if receiving no ACK when the indoor unit transmit signal to the Lossnay.	① An abnormality is detected when the indoor unit transmits signal to Lossnay while the Lossnay is turned OFF. ② While the indoor unit is operating with the other refrigerant Lossnay, an abnormality is detected when the indoor unit transmits signal to the Lossnay while the outdoor unit with the same refrigerant system as the Lossnay is turned OFF, or within 2 minutes after it turned back ON. ③ Contact failure of indoor unit or Lossnay transmission line ④ Disconnection of transmission connector (CN2M) on indoor unit ⑤ Malfunction of sending/receiving circuit on indoor unit or Lossnay
⑦The controller of displayed address and attribute is not recognized.	① The previous address unit does not exist since the address switch was changed while in electric continuity status. ② An abnormality detected at transmitting from the indoor unit since the Fresh Master/Lossnay address are changed after synchronized setting of Fresh Master/Lossnay by the remote controller.

Check code
6607 (A7)

No ACK error

●Diagnosis of defectives

Make sure to turn the power OFF before connecting/disconnecting any connectors, or replacing boards.

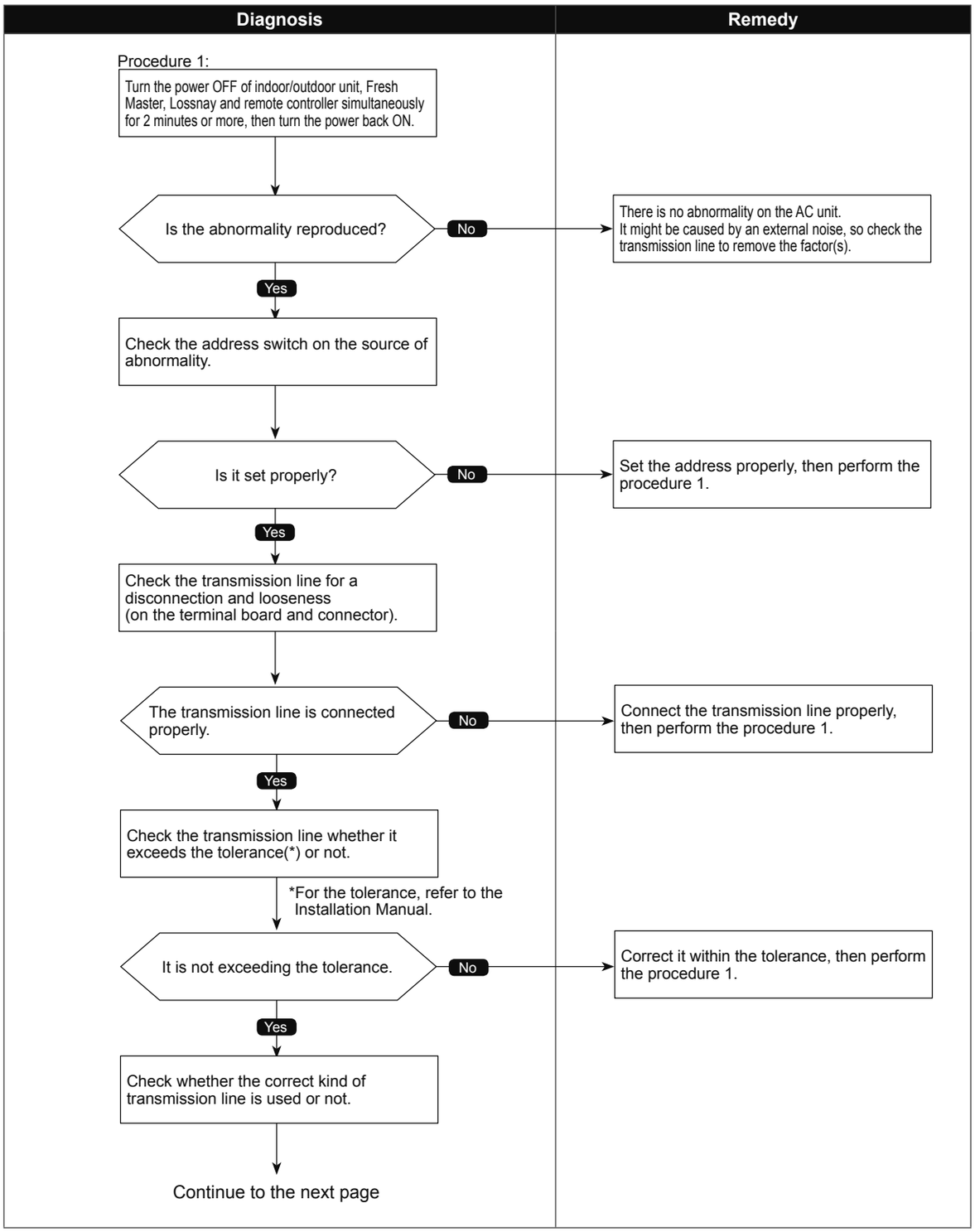

Check code
6607 (A7)

No ACK error

Chart 4 of 4

●Diagnosis of defectives

Make sure to turn the power OFF before connecting/disconnecting any connectors, or replacing boards.

Diagnosis	Remedy
Continued from the previous page	
Is the correct kind of transmission line used?	
No →	Apply the correct kind of transmission line, then perform the procedure 1.
Yes	
Is it operating in multi refrigerant system?	
No →	When operating in a single refrigerant system (single indoor unit), the controller of the displayed address/attribute is defective.
Yes	
When operating in a multi refrigerant system (2 or more outdoor units), check if any of the indoor unit stores non-existing address information.	
Is the address information correct?	
No →	Delete the unnecessary address using a manual setting function on the remote controller (Only for operating in a system with the Fresh Master/ Lossnay is connected, or in a multi refrigerant system with group setting is set).
Yes	
Replace the controller board which the displayed address/attribute belongs to.	
Does it operate normally?	
No →	Defective outdoor controller board (repeater circuit) on the outdoor unit is suspected. Replace the outdoor controller board one by one, then check for normal operation.
Yes →	Complete

Check code
6608 (A8)

No response frame error

Abnormal points and detection methods	Causes and checkpoints
Abnormal if receiving no response command while already received ACK. The sending side searches the error in 30 seconds interval for 6 times continuously.	① Continuous failure of transmission due to noise etc ② Decline of transmission voltage/signal caused by tolerance over on transmission line ·At the furthest end: 656 ft [200 m] ·On remote controller line: 39 ft [12 m] ③ Decline of transmission voltage/signal due to unmatched transmission line types ·Types for shield line: CVVS, CPEVS, or MVVS ·Line diameter: AWG 16 [1.25 ㎟] ④ Accidental malfunction of error source controller

●Diagnosis of defectives

Make sure to turn the power OFF before connecting/disconnecting any connectors, or replacing boards.

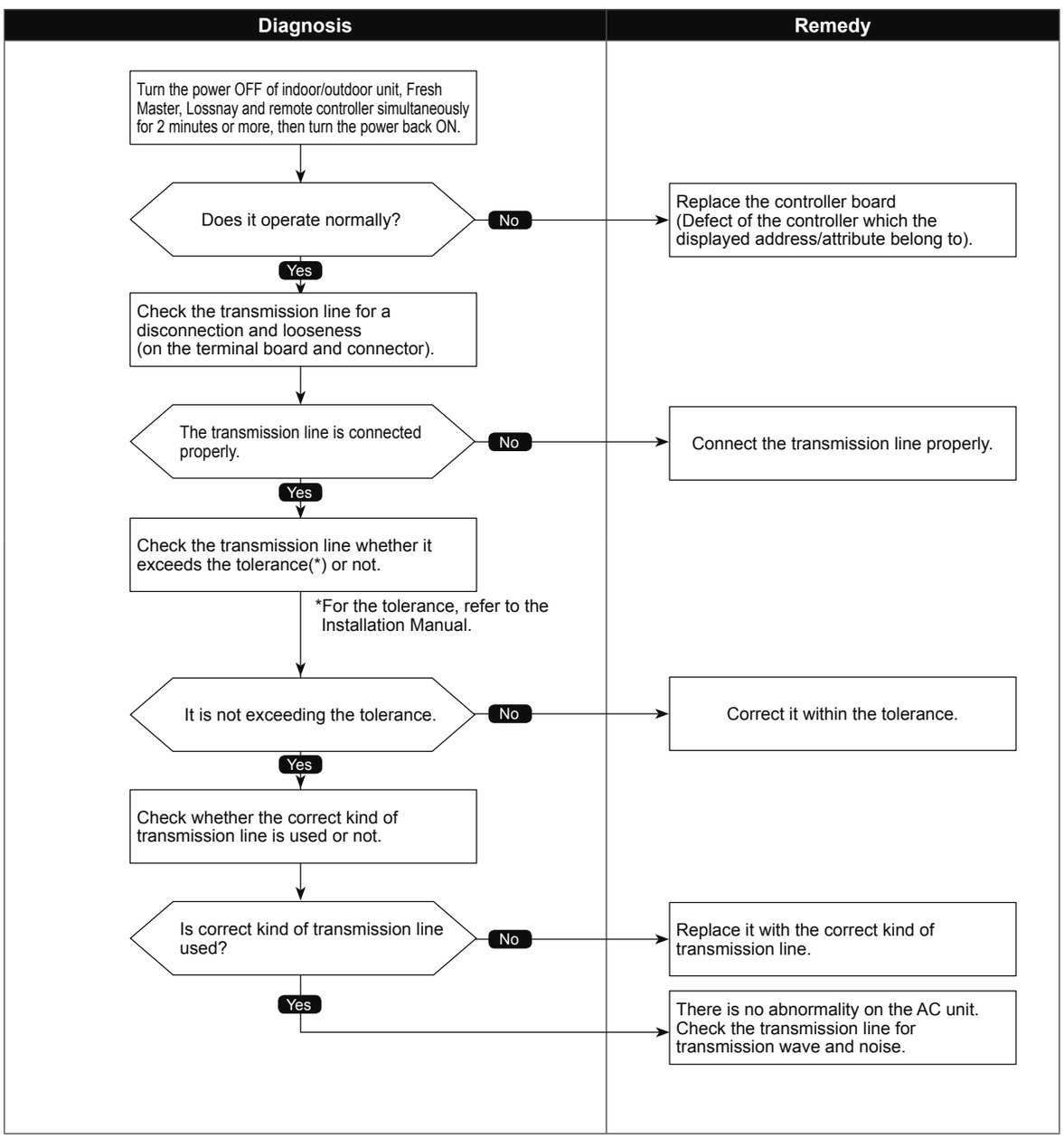

Check code

6831, 6834 (E0/E4)

MA communication receive error

Chart 1 of 2

Abnormal points and detection methods	Causes and checkpoints
Detected in remote controller or indoor unit: ①When the main or sub remote controller cannot receive signal from indoor unit which has the "0" address. ②When the sub remote controller cannot receive signal. ③When the indoor controller board cannot receive signal from remote controller or another indoor unit. ④When the indoor controller board cannot receve signal.	①Contact failure of remote controller wirings ②Irregular Wiring (A wiring length, number of connecting remote controllers or indoor units, or a wiring thickness does not meet the conditions specified in the chapter "Electrical Work" in the indoor unit Installation Manual.) ③Malfunction of the remote controller sending/ receiving circuit on indoor unit with the LED2 is blinking. ④Malfunction of the remote controller sending/ receiving circuit ⑤ Remote controller transmitting error caused by noise interference

●Diagnosis of defectives

Make sure to turn the power OFF before connecting/disconnecting any connectors, or replacing boards

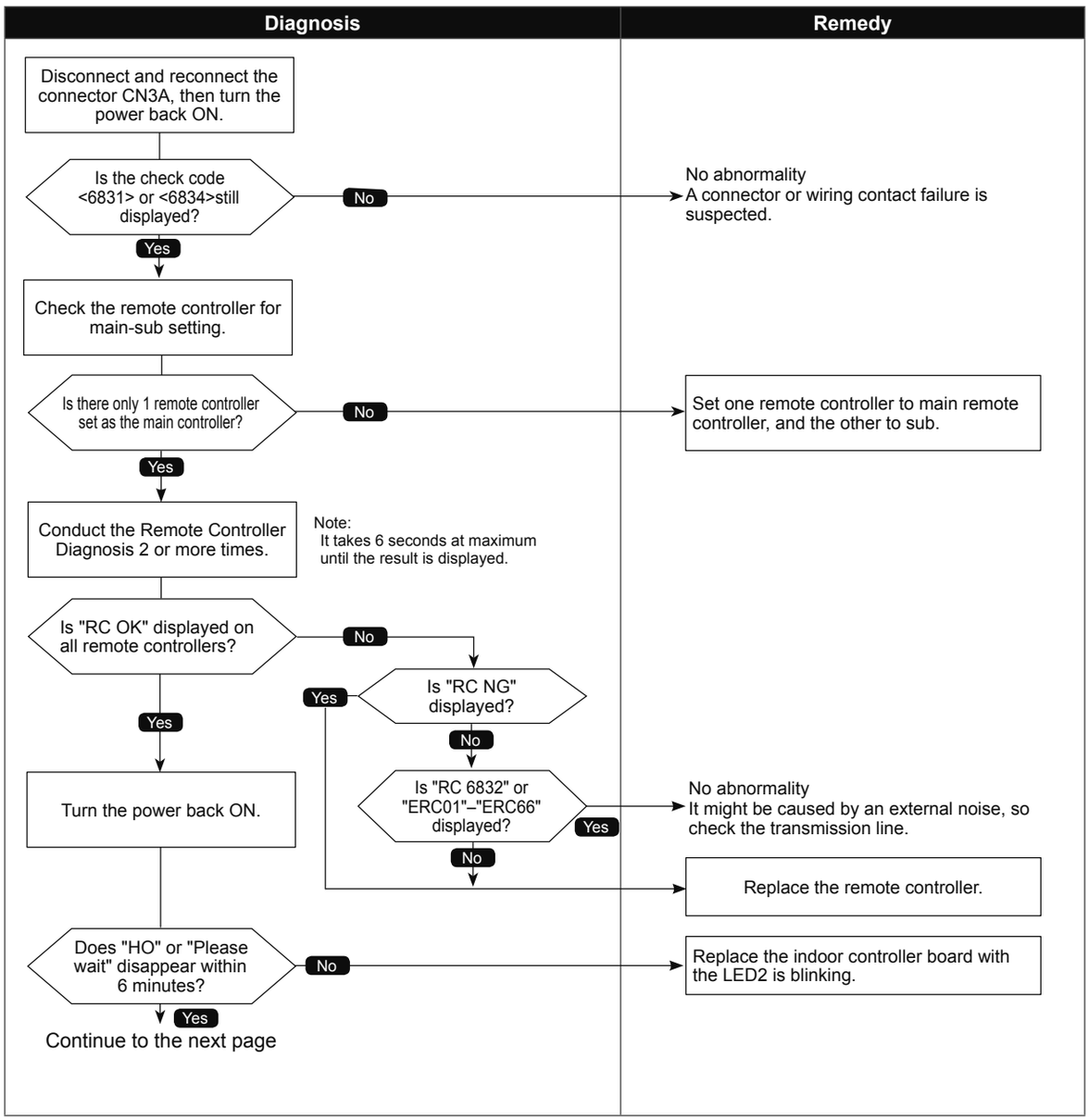

MA communication receive error

●Diagnosis of defectives

Make sure to turn the power OFF before connecting/disconnecting any connectors, or replacing boards

Diagnosis	Remedy
Continued from the previous page ↓ Refer to the chapter "Electrical Work". ↓ Is the wiring connected properly, meeting the condition? No →	Connect the wiring properly as specified in the chapter "Electrical Work" in the indoor unit Installation Manual.
Yes →	No abnormality It might be caused by an external noise, so check the transmission line to remove the factor(s).

Check code

6832, 6833 (E3/E5)

MA communication send error

Chart 1 of 2

Abnormal points and detection methods	Causes and checkpoints
Detected in remote controller or indoor unit.	① There are 2 remote controllers set as main. ② Malfunction of remote controller sending/receiving circuit ③ Malfunction of sending/receiving circuit on indoor controller board ④ Remote controller transmitting error caused by noise interference

●Diagnosis of defectives

Make sure to turn the power OFF before connecting/disconnecting any connectors, or replacing boards

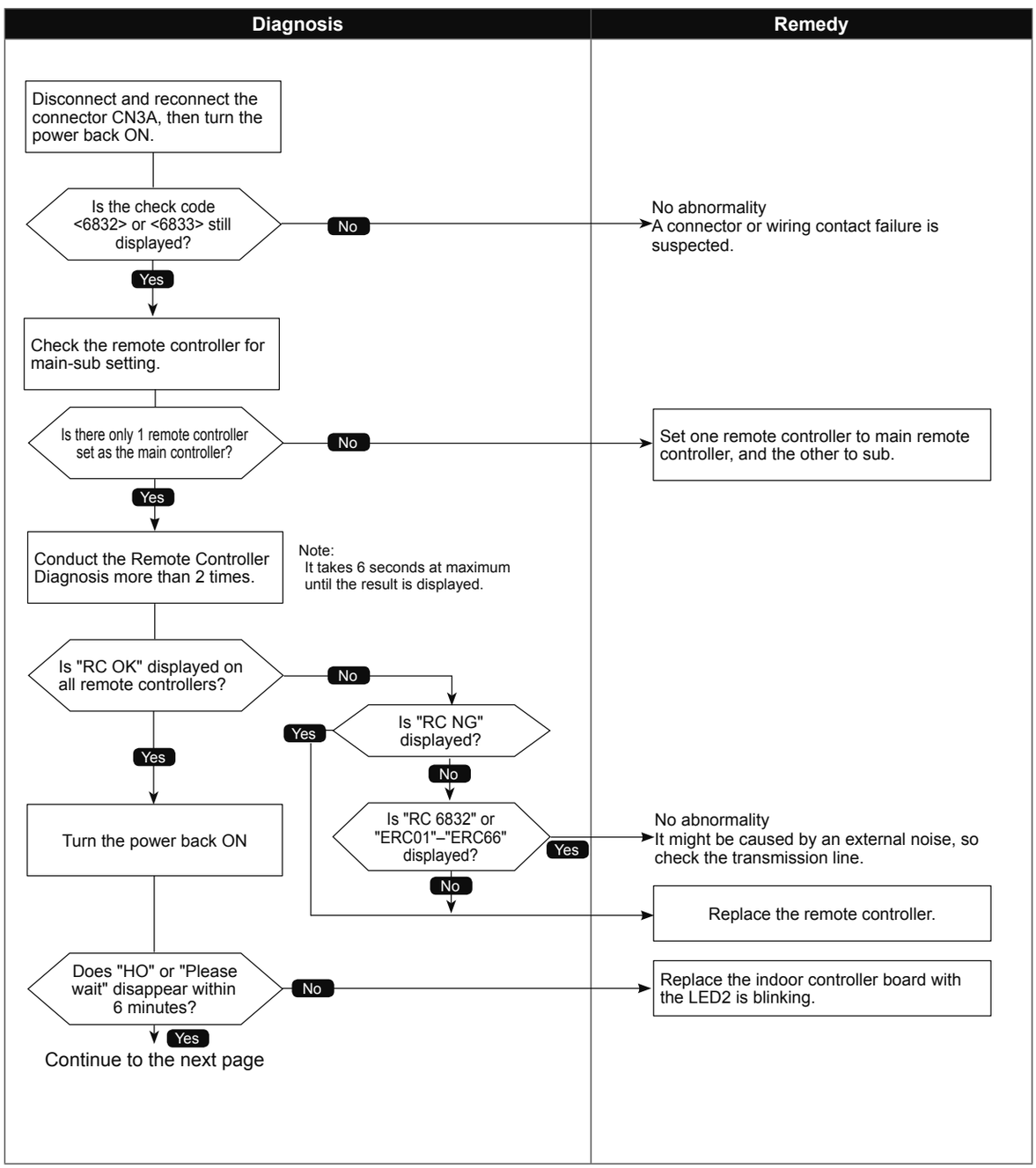

MA communication send error

●Diagnosis of defectives

Make sure to turn the power OFF before connecting/disconnecting any connectors, or replacing boards

Diagnosis	Remedy
Continued from the previous page Refer to the chapter "Electrical Work". Is the wiring connected properly, meeting the condition? No →	Connect the wiring properly as specified in the chapter "Electrical Work" in the indoor unit Installation Manual.
Yes →	No abnormality It might be caused by an external noise, so check the transmission line to remove the factor(s).

Check code

7100 (EF)

Total capacity error

Abnormal points and detection methods	Causes and checkpoints
When the total capacity of connected indoor units exceeds the specified capacity (130% of the outdoor unit capacity), a check code <7100> is displayed.	① The total capacity of connected indoor units exceeds the specified capacity. · P36: up to code 32 · P48: up to code 35 ② The model name code of the outdoor unit is registered wrongly.

●Diagnosis of defectives

Make sure to turn the power OFF before connecting/disconnecting any connectors, or replacing boards.

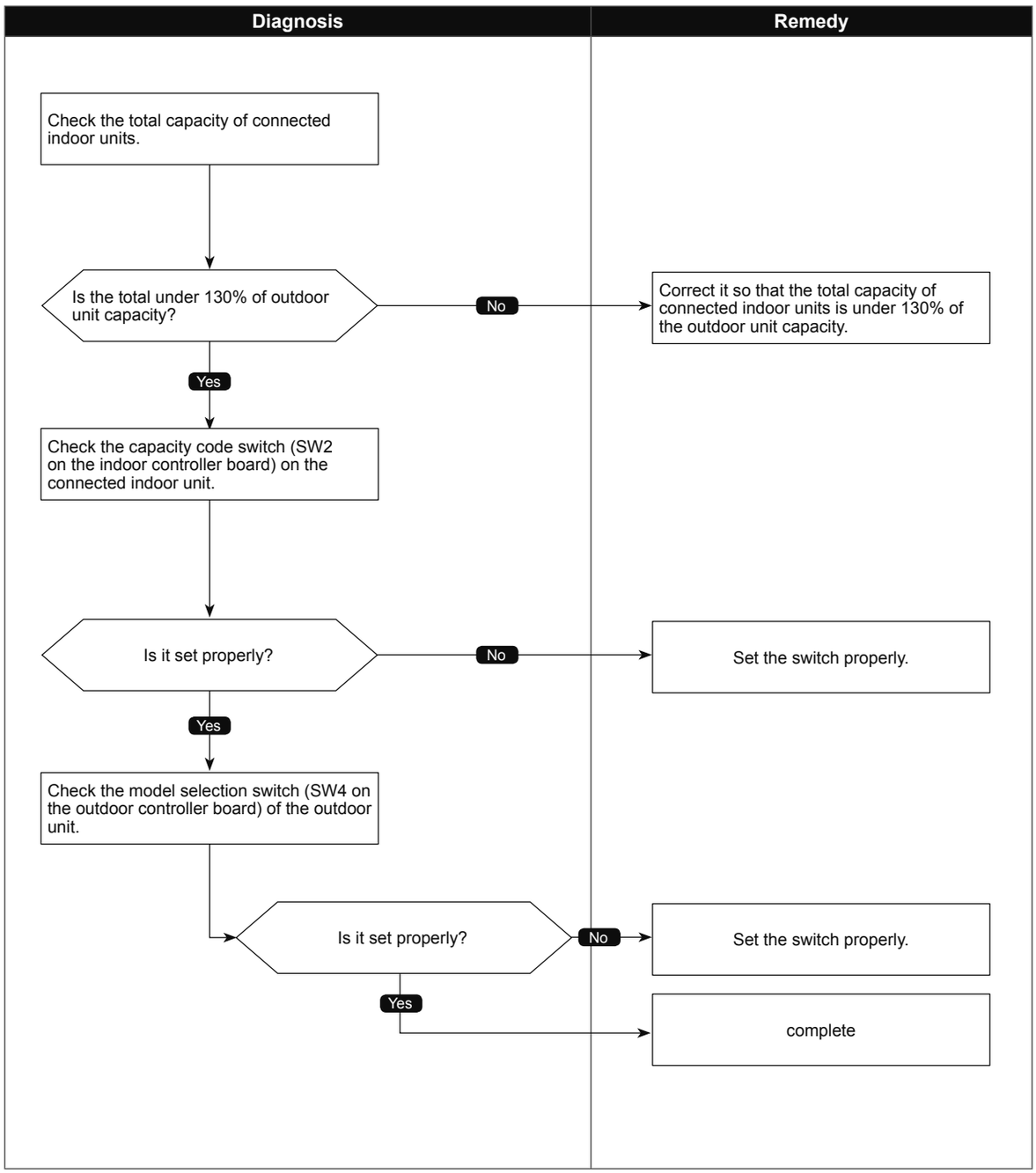

Check code

7101
(EF)

Capacity code error

Abnormal points and detection methods	Causes and checkpoints
When the capacity of connected indoor unit is over, a check code <7101> is displayed.	The model name of connected indoor unit (model code) is read as incompatible. The connectable indoor units are: ·P36 to P48 model: P06 to P54 model (code 4 to 28)

●Diagnosis of defectives

Make sure to turn the power OFF before connecting/disconnecting any connectors, or replacing boards.

Diagnosis	Remedy

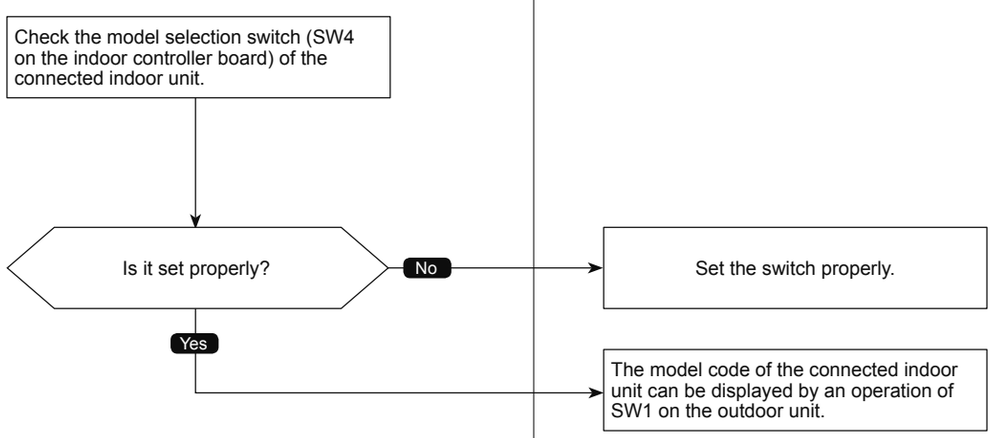

Check code

7102 (EF)

Connecting excessive number of units

Abnormal points and detection methods	Causes and checkpoints
When the connected indoor units exceed the limit, a check code <7102> is displayed.	Connecting more indoor units than the limit. Abnormal if connecting status does not comply with the following limit; ① Connectable up to 7 units for P36, 10 units for P48 ② Connect at least 1 indoor unit (Abnormal if connected none). ③ Connectable only 1 ventilation unit

●Diagnosis of defectives

Make sure to turn the power OFF before connecting/disconnecting any connectors, or replacing boards.

Diagnosis	Remedy

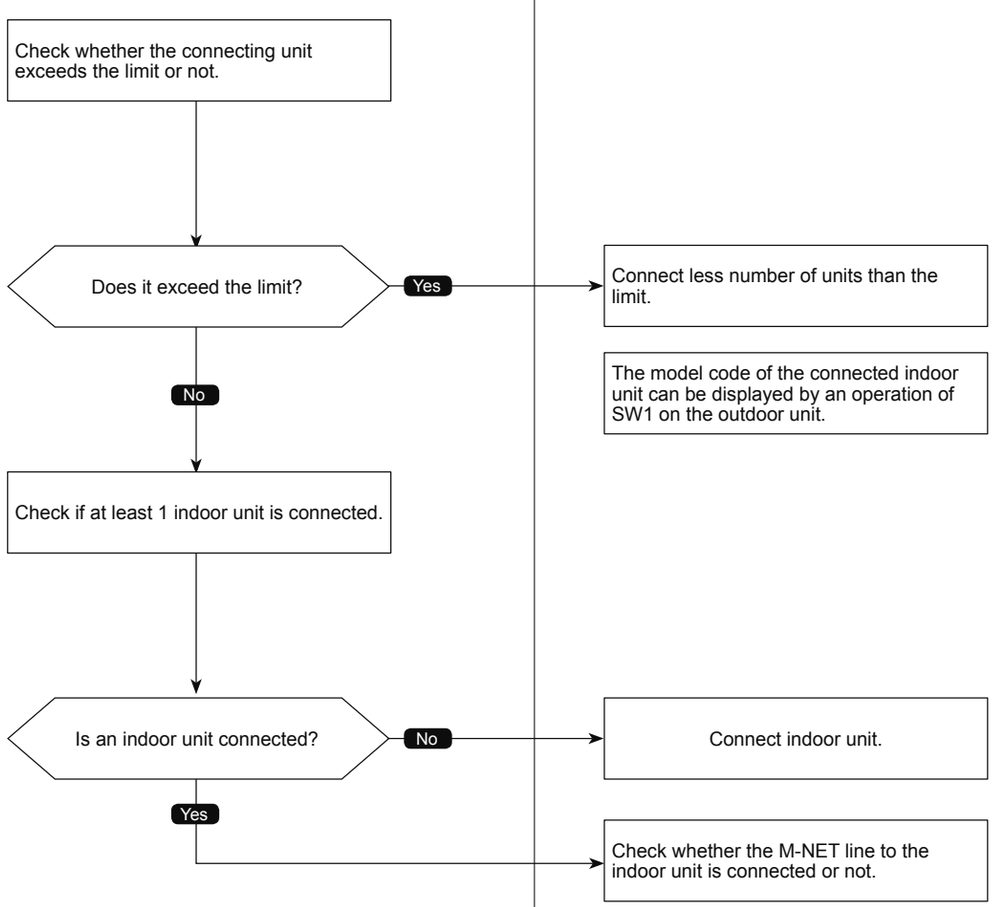

Check code

7105 (EF)

Address setting error

Abnormal points and detection methods	Causes and checkpoints
The address setting of outdoor unit is wrong.	Wrongly set address The outdoor unit is not set in 000, or in the range of 51 to 100.

●Diagnosis of defectives

Make sure to turn the power OFF before connecting/disconnecting any connectors, or replacing boards.

Diagnosis	Remedy

<Outdoor unit>

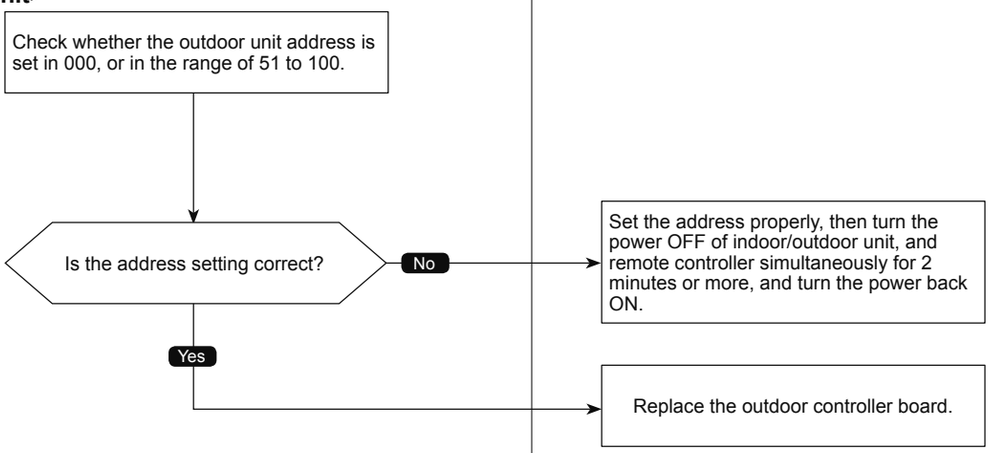

Check code

7130 (EF)

Incompatible unit combination error

Abnormal points and detection methods	Causes and checkpoints
When the connected indoor unit is not connectable with the outdoor unit, the outdoor unit detects the error at startup.	Connecting indoor unit(s) which is not authorized to connect to the outdoor unit.

●Diagnosis of defectives

Make sure to turn the power OFF before connecting/disconnecting any connectors, or replacing boards.

Diagnosis | **Remedy**

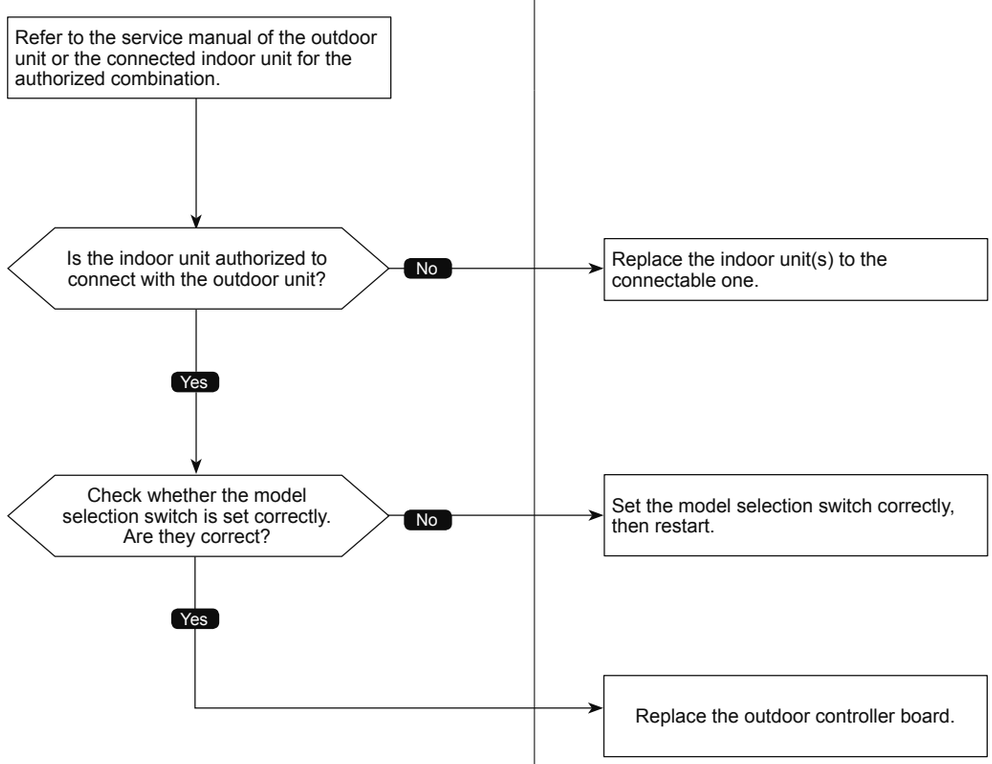

8-2. REMOTE CONTROLLER DIAGNOSIS

For the detailed procedure, refer to the remote controller's manuals.

8-3. REMOTE CONTROLLER TROUBLE

For the troubleshooting, refer to the remote controller's manuals.

8-4. THE FOLLOWING SYMPTOM DO NOT REPRESENT TROUBLE (EMERGENCY)

Symptom	Display of remote controller	CAUSE
Even the cooling (heating) operation selection button is pressed, the indoor unit cannot be operated.	"Cooling (Heating)" blinks	The indoor unit can not cool (Heat) if other indoor units are heating (Cooling).
The auto vane runs freely.	Normal display	Because of the control operation of auto vane, it may change over to horizontal blow automatically from the downward blow in cooling in cause the downward blow operation has been continued for 1 hour. At defrosting in heating, hot adjusting and thermostat OFF, it automatically changes over to horizontal blow.
Fan setting changes during heating.	Normal display	Ultra-low speed operation is commenced at thermostat OFF. Light air automatically change over to set value by time or piping temperature at thermostat ON.
Fan stops during heating operation.	"Defrost ☼"	The fan is to stop during defrosting.
Fan does not stop while operation has been stopped.	Light out	Fan is to run for 1 minute after stopping to exhaust residual heat (only in heating).
No setting of fan while start SW has been turned on.	STAND BY ☼	Ultra-low speed operation for 5 minutes after SW ON or until piping temperature becomes 35°C. There low speed operate for 2 minutes, and then set notch is commenced. (Hot adjust control)
Indoor unit remote controller shows "HO" or "PLEASE WAIT " indicator for about 2 minutes when turning ON power supply.	"HO" blinks "PLEASE WAIT" blinks	System is being driven. Operate remote controller again after "HO" or "PLEASE WAIT" disappears.
Drain pump does not stop while unit has been stopped.	Light out	After a stop of cooling operation, unit continues to operate drain pump for 3 minutes and then stops it.
Drain pump continues to operate while unit has been stopped.	—	Unit continues to operate drain pump if drainage is generated, even during a stop.

8-5. INTERNAL SWITCH FUNCTION TABLE

PUMY-P36NKMU1 PUMY-P48NKMU1
PUMY-P36NKMU1-BS PUMY-P48NKMU1-BS

The black square (■) indicates a switch position.

Switch	Step	Function	Operation in Each Switch Setting			Remarks	Purpose	Additional Information
			ON	OFF	When to Set			
SWU1 ones digit SWU2 tens digit	Rotary switch	SWU2 (tens digit) SWU1 (ones digit)			Before turning the power ON	<Initial settings> SWU2 (tens digit) SWU1 (ones digit)		
SW1 Digital Display Switch	1–8	ON OFF 1 2 3 4 5 6 7 8			Can be set either during operation or not.	<Initial settings> ON OFF 1 2 3 4 5 6		
SW2 Function Switch	1	Selects operating system startup	With centralized controller	Without centralized controller	Before turning the power ON	<Initial settings> ON OFF 1 2 3 4 5 6	Turn ON when the centralized controller is connected to the outdoor unit.	SW2-1 must be turned ON if a central controller is connected to the system. An example of this would be a TC-24, EW-50A, AG150, AE50 or AE200. If SW2-1 is not turned on, while using a central controller, in rare circumstances problems may be encountered such as indoor units not responding to group commands. Therefore, turning SW2-1 ON is recommended if a central controller is used.
	2	Connection Information Clear Switch	Clear	Do not clear			When relocating units or connecting additional units.	—
	3	Abnormal data clear switch input	Clear abnormal data	Normal	OFF to ON any time after the power is turned on.		To delete an error history.	
	4	Pump down	Run adjustment mode	Normal	During compressor running		To facilitate outdoor unit the pumping down operation. Frequency = Fixed to 65 Hz Indoor-electronic expansion valve = Fully open Outdoor fan step = Fixed to 10	Please refer to a section referring to the pumping down on outdoor units Installation Manuals. It might not be possible to collect all the refrigerant if the amount is excessive.
	5	—	—	—	—	—	—	—
	6	—	—	—	—	—	—	—
SW4/ SW8 Model Switch	1–6	MODEL SELECTION 1:ON 0:OFF MODELS / SW4 / SW8 PUMY-P36NKMU1: SW4 ON OFF 1 2 3 4 5 6; SW8 ON OFF 1 2 PUMY-P48NKMU1: SW4 ON OFF 1 2 3 4 5 6; SW8 ON OFF 1 2			Before the power is turned ON.	<Initial settings> Set for each capacity.	—	—
SW3 Trial operation	1	ON/OFF from outdoor unit	ON	OFF	Any time after the power is turned ON.	<Initial settings>	—	—
	2	Mode setting	Heating	Cooling			—	—
SW5 Function switch	1	Demand control setting for Australia	Australia setting	Normal	Can be set when off or during operation	ON OFF 1 2	Turn ON to activate the demand control for Australia.	(Do not turn this ON if the unit is in outside Australia)
	2	Change the indoor unit's LEV opening at start-up	Enable	Normal			To set the LEV opening at start-up higher than usual. (+150 pulses) To improve the operation with the LEV almost clogged.	The refrigerant flow noise at start-up become louder.
	3	—	—	—			—	—
	4	Auxiliary heater	Enable	Disable	Before the power is turned ON.	<Initial settings>	Turn ON when an auxiliary heater is connected. (It transmits a connection permission signal of the auxiliary heater to the connected CITY MULTI indoor unit.)	Turn ON only when the auxiliary heater is connected and operated.
	5	Change the indoor unit's LEV opening at defrost	Enable	Normal	Can be set when OFF or during operation	ON OFF 1 2 3 4 5 6 7 8	To set the LEV opening higher than usual during defrosting operation. (Only Qj ≦ 10 is valid, + 300 pulses) To avoid the discharge temperature increase and provide efficient defrosting operation.	The refrigerant flow noise during the defrosting operation becomes louder.
	6	Switching the target sub cool (Heating mode)	Enable	Normal			To decrease the target sub cool value. To reduce the discharge temperature decrease due to refrigerant liquid accumulation in the units.	A refrigerant flow noise might be generated if the sub cool value is too small.

Continue to the next page

Switch	Step	Function	Operation in Each Switch Setting			Remarks	Purpose	Additional Information
			ON	OFF	When to Set			
SW5 Function switch	7	During the outdoor unit is in HEAT operation, additionally increase about 50 to 70 pulses of the LEV opening on the indoor unit which is in FAN, STOP, COOL or thermo-OFF*1.	Active	Inactive	Can be set when OFF or during operation	<Initial settings> ON OFF 1 2 3 4 5 6 7 8	To additionally increase about 50 to 70 pulses of the LEV opening for units other than in HEAT operation. To avoid a refrigerant shortage (less capacity) due to refrigerant liquid accumulation in the units which is not in operation.	A refrigerant flow noise might be generated in units other than the one in operation.
	8	During the outdoor unit is in operation, fully closes the electronic expansion valve on the indoor unit which is in FAN, COOL, STOP, or thermo-OFF.*2	Enable	Normal	Before turning the power ON.		To reduce the room temperature increase by setting the LEV opening lower for the units in thermo-OFF operation.	The refrigerant is more likely to collect in the units with thermo-OFF operation, and causing the units refrigerant shortage. (Results in less capacity and increase of discharge temperature.)
SW6 Function switch	1	—	—	—	—	<Initial settings> ON OFF 1 2 3 4 5 6 7 8	—	—
	2	—	—	—	—		—	—
	3	—	—	—	—		—	—
	4	Change of defrosting control	Enable (For high humidity)	Normal	Can be set when OFF or during operation	SW6-6: OFF / ON Target Pdm (kg/cm²): 31.5 / 33.5	To shorten the defrosting prohibition time in high humidity (or heavy snow) region, in order to reduce malfunctions caused by frost .	The performance of the HEAT operation is somewhat reduced since the defrosting operation is frequently performed.
	5	—	—	—			—	—
	6	Switching the target discharge pressure (Pdm)	Enable	Normal			To raise the performance by setting the Pdm higher during HEAT operation.	Power consumption is raised due to a higher frequency. (The performance would not be raise at the maximum operating frequency.)
	7	Switching (1) the target evaporation temperature (ETm)	Enable	Normal		SW6-7: OFF / ON / OFF / ON SW6-8: OFF / OFF / ON / ON Target ETm (℃): 9 / 11 / 6 / 14	To raise/reduce the performance by changing the target ETm during COOL operation. Switch to raise the performance: raises the performance Switch to reduce the performance: prevents dew condensation	Switching it to raise the performance, it raises the power consumption, and produces more dew condensation. Switching it to reduce the performance, it makes the performance insufficient.
	8	Switching (2) the target evaporation temperature (ETm)	Enable	Normal				
SW7 Function switch	1	Ignore current sensor abnormality and rotational frequency abnormality of outdoor fan motor	Enable	Normal	After turning the power ON	<Initial settings> ON OFF 1 2 3 4 5 6	To perform a test run for electrical parts alone without running the compressor. Also, to perform the troubleshooting of electrical parts without operating the outdoor unit's fan.	Make sure to connect the connectors to the compressor after checking the electrical parts. Be careful not to get electrical shock while working on electrical parts.
	2	Setting to energize the freeze stat heater (optional part)	During heating operation only*3	Include when the heating operation is OFF.*4	Can be set when OFF or during operation		It reduces snow on the base, even it blows inside the unit, by setting the base heater ON while the HEAT operation is stopped.	Power consumption raises while the operation is stopped.
	3	High heating performance mode	Enable	Normal	Anytime		To raise the performance of HEAT operation if it is insufficient.	The performance may not be raised depending on the capacity of indoor units in operation, or outside air temperature.
	4	Maximum frequency down at 1 hour after COOL operation	Enable	Normal	Can be set when OFF or during operation		To reduce dew condensation on the indoor unit by lowering the frequency.	The performance might be insufficient.
	5	Simultaneous cooling and heating with external heater	Enable	Disable	Anytime		The simultaneous operation of cooling and heating will be possible by installing an external heater to the CITY MULTI indoor unit.	For the installation of external heater and the indoor unit setting, refer to the indoor unit service manual.
	6	Manual defrost	Manual defrost	Normal	During compressor running in HEAT mode.		Turn ON when it is necessary to perform the defrosting operation forcedly. (Effective only at start-up, or 10 minutes after the last defrosting operation)	It performs the defrosting operation forcedly. (HEAT operation is stopped temporarily.)
SW9 Function Switch	1	Auto change over from remote controller (IC with the minimum address)	Enable	Disable	Before turning the power ON	<Initial settings> ON OFF 1 2 3 4	Enables the indoor unit with the minimum address to select AUTO mode, and switches the operation mode of the other indoor units to the same mode.	Cannot be set when the centralized control is ON.
	2	Switching the Silent/ Demand mode	Demand control	Silent mode	Can be set when OFF or during operation		—	About the Silent mode/Demand control setting, refer to "8-10. OUTDOOR UNIT INPUT/OUTPUT CONNECTOR".
	3	—	—	—	—		—	—
	4	—	—	—	—		—	—

*1 SW5-7 Opens the indoor-electronic expansion valve as a countermeasure against the indoor unit in FAN, COOL, STOP, or thermo-OFF operation with refrigerant-shortage status due to an accumulation of liquid refrigerant in the indoor unit.
*2 SW5-8 Countermeasure against room temperature rise for indoor unit in FAN, COOL, and thermo-OFF (heating) mode.
*3 During heating operation and the ambient temperature is 4℃ or below, the freeze prevention heater is energized.
*4 During heating mode is OFF (include thermo-OFF in cooling mode), and the ambient temperature is 4℃ or below, the freeze prevention heater is energized.

8-6. OUTDOOR UNIT INPUT/OUTPUT CONNECTOR

● **State (CN51)**

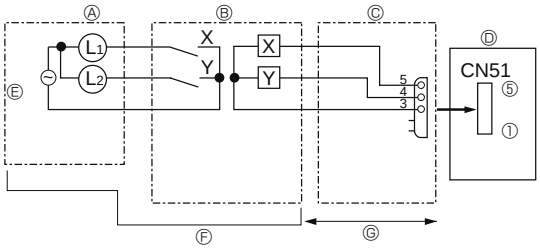

Ⓐ Distant control board
Ⓑ Relay circuit
Ⓒ External output adapter (PAC-SA88HA-E)
Ⓓ Outdoor unit control board
Ⓔ Lamp power supply
Ⓕ Procure locally
Ⓖ Max. 10m

L_1: Error display lamp
L_2: Compressor operation lamp
X, Y: Relay (Coil standard of 0.9W or less for 12 V DC)
X, Y: Relay (1 mA DC)

● **Auto change over (CN3N)**

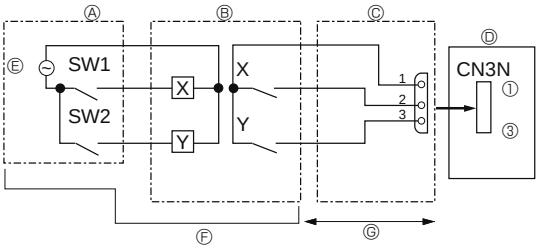

Ⓐ Remote control panel
Ⓑ Relay circuit
Ⓒ External input adapter (PAC-SC36NA-E)
Ⓓ Outdoor unit control board
Ⓔ Relay power supply
Ⓕ Procure locally
Ⓖ Max. 10 m

	ON	OFF
SW1	Heating	Cooling
SW2	Validity of SW1	Invalidity of SW1

● **Silent Mode/Demand Control (CN3D)**

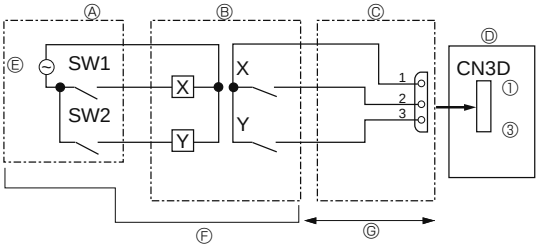

Ⓐ Remote control panel
Ⓑ Relay circuit
Ⓒ External input adapter (PAC-SC36NA-E)
Ⓓ Outdoor unit control board
Ⓔ Relay power supply
Ⓕ Procure locally
Ⓖ Max. 10 m

The silent mode and the demand control are selected by switching the DIP switch 9-2 on outdoor controller board.
It is possible to set it to the following power consumption (compared with ratings) by setting SW1, 2.

	Outdoor controller board DIP SW9-2	SW1	SW2	Function
Silent mode	OFF	ON	—	Silent mode operation
Demand control	ON	OFF	OFF	100% (Normal)
		ON	OFF	75%
		ON	ON	50%
		OFF	ON	0% (Stop)

8-7. HOW TO CHECK THE PARTS

PUMY-P36NKMU1 PUMY-P48NKMU1
PUMY-P36NKMU1-BS PUMY-P48NKMU1-BS

<table>
<tr><th>Parts name</th><th>Check points</th></tr>
<tr><td>Thermistor (TH2)
<Hic pipe>
Thermistor (TH3)
<Outdoor liquid pipe>
Thermistor (TH4)
<Compressor>
Thermistor (TH6)
<Suction pipe>
Thermistor (TH7)
<Ambient>
Thermistor (TH8)
<Heat sink></td><td>Disconnect the connector then measure the resistance with a tester.
(At the ambient temperature 10 to 30℃)
<table>
<tr><th></th><th>Normal</th><th>Abnormal</th></tr>
<tr><td>TH4</td><td>160 to 410 kΩ</td><td rowspan="3">Open or short</td></tr>
<tr><td>TH2
TH3
TH6
TH7</td><td>4.3 to 9.6 kΩ</td></tr>
<tr><td>TH8*</td><td>39 to 105 kΩ</td></tr>
</table></td></tr>
<tr><td>Fan motor (MF1, MF2)
 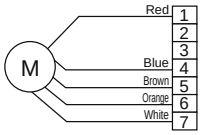
</td><td>Measure the resistance between the conector pins with a tester.
(At the ambient temperature 20℃)
<table>
<tr><th colspan="4">Normal</th><th>Abnormal</th></tr>
<tr><td>Red - Blue</td><td>Brown - Blue</td><td>Orange - Blue</td><td>White - Blue</td><td rowspan="2">Open or short
(Short, for White - Blue)</td></tr>
<tr><td>1.1 ± 0.05 MΩ</td><td>40 ± 4 kΩ</td><td>220 ± 22 kΩ</td><td>Open</td></tr>
</table></td></tr>
<tr><td>Solenoid valve coil
<4-way valve>
(21S4)</td><td>Measure the resistance between the terminals with a tester.
(At the ambient temperature 20℃)
<table>
<tr><th>Normal</th><th>Abnormal</th></tr>
<tr><td>1567.5 ± 156.8 Ω</td><td>Open or short</td></tr>
</table></td></tr>
<tr><td>Motor for compressor
(MC)
 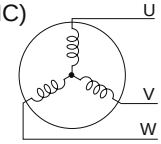
</td><td>Measure the resistance between the terminals with a tester.
(Winding temperature 20℃)
<table>
<tr><th>Normal</th><th>Abnormal</th></tr>
<tr><td>0.305 ± 0.015 Ω</td><td>Open or short</td></tr>
</table></td></tr>
<tr><td>Solenoid valve coil
<Bypass valve>
(SV1)</td><td>Measure the resistance between the terminals with a tester.
(At the ambient temperature 20℃)
<table>
<tr><th>Normal</th><th>Abnormal</th></tr>
<tr><td>1197 ± 10 Ω</td><td>Open or short</td></tr>
</table></td></tr>
<tr><td>Linear expansion Valve
(LEV A)
 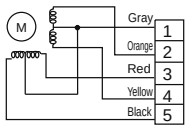
</td><td>
<table>
<tr><th colspan="4">Normal</th><th>Abnormal</th></tr>
<tr><td>Gray - Black</td><td>Gray - Red</td><td>Gray - Yellow</td><td>Gray - Orange</td><td rowspan="2">Open or short</td></tr>
<tr><td colspan="4">46 ± 3 Ω</td></tr>
</table></td></tr>
<tr><td>Linear expansion Valve
(LEV B)
 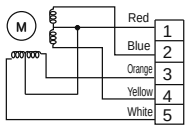
</td><td>
<table>
<tr><th colspan="4">Normal</th><th>Abnormal</th></tr>
<tr><td>Red - White</td><td>Red - Orange</td><td>Red - Yellow</td><td>Red - Blue</td><td rowspan="2">Open or short</td></tr>
<tr><td colspan="4">46 ± 4 Ω</td></tr>
</table></td></tr>
</table>

Check method of DC fan motor (fan motor/outdoor multi controller circuit board)

① Notes

· High voltage is applied to the connecter (CNF1, 2) for the fan motor. Pay attention to the service.

· Do not pull out the connector (CNF1, 2) for the motor with the power supply on.
(It causes trouble of the outdoor multi controller circuit board and fan motor.)

② Self check

Symptom : The outdoor fan cannot rotate.

Fuse check
Check the fuse (F500) on outdoor multi controller circuit board.

Did the fuse blow? → Yes → Disconnect the FAN motor connector and measure the resistance of connector pins. Refer to "8-7. HOW TO CHECK THE PARTS". → Replace the outdoor multi controller circuit board (MULTI.B.) and the defective fan motor.

↓ No

Wiring contact check
Contact of fan motor connector (CNF1, 2)

↓

Is there contact failure? → Yes → Recover wiring.

↓ No

Power supply check (Remove the connector (CNF1, 2))
① While the breaker is OFF, disconnect the compressor wirings (U/V/W) from the outdoor power circuit board.
② While the breaker is OFF, disconnect the fan motor connector CNF1, 2.
③ When 5 minutes have passed since turning ON the breaker, turn SW7-1 ON.
④ Check the voltage of the outdoor multi controller circuit board.

Measure the voltage in the outdoor controller circuit board.
TEST POINT 1: VDC (between 1 (+) and 4 (−) of the fan connector): 310–340 V DC (Y)
: VDC (between 1 (+) and 4 (−) of the fan connector): 280–340 V DC (when PFC module stops),
: 380 V DC (when PFC module is operating) (V)
TEST POINT 2: VCC (between 5 (+) and 4 (−) of the fan connector): VCC 15 V DC
TEST POINT 3: VCC (between 6 (+) and 4 (−) of the fan connector): VCC 0–6.5 V DC

↓

Is the voltage normal? → Yes → Replace the defective fan motor.

↓ Yes → Check the operation of fan. → OK → COMPLETE

↓ Fail → Replace the outdoor multi controller circuit board.

↓ No

Replace the outdoor multi controller circuit board.

↓

Check the operation. → OK → COMPLETE

↓ Fail

Replace the fan motor.

Note: Turn SW7-1 OFF after the troubleshooting completes.

Check method of multi controller circuit board

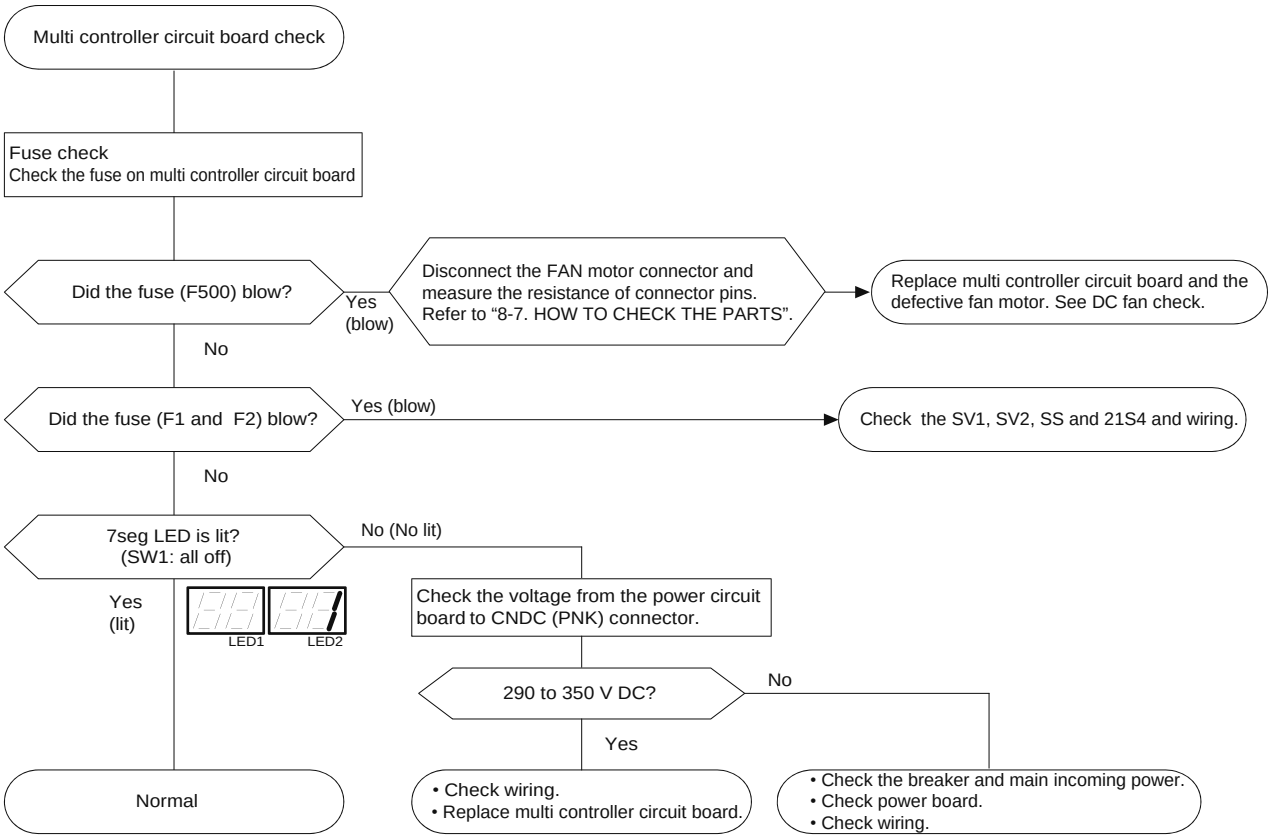

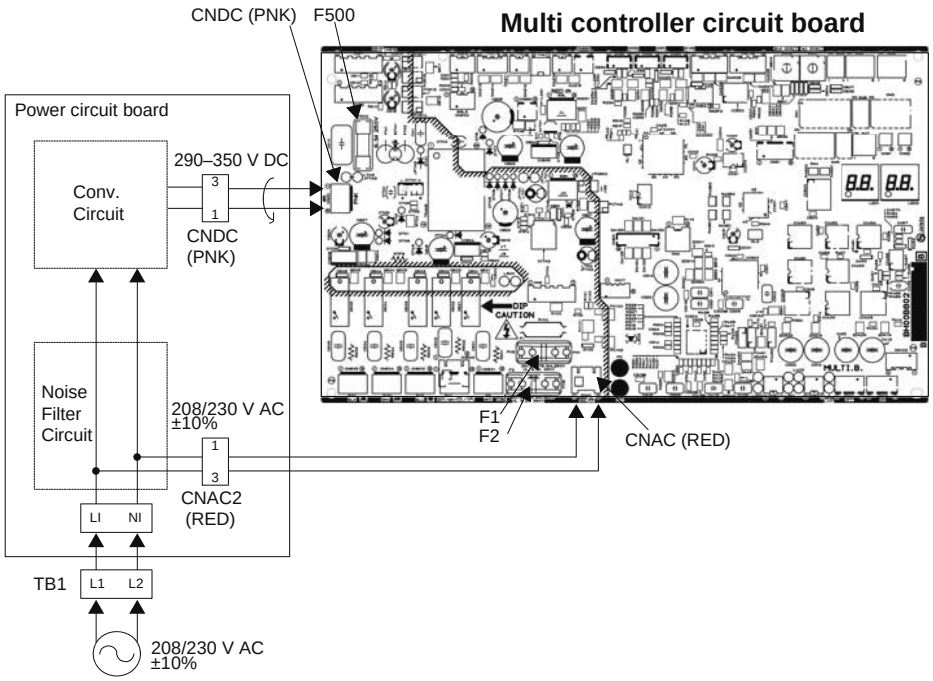

Check method of power circuit board

Power circuit board check

Note: To check the voltage of the parts on this board with a tester is difficult due to its location. Test points are limited.

Is the voltage of main incoming power 208/230 V AC ±10%?
- No → • Check the breaker and power supply.
- Yes ↓

Is the voltage of CNAC (RED) on multi controller circuit board 208/230 V AC ±10%?
- No → • Check wiring. • Replace power circuit board.
- Yes ↓

Is the voltage between M1 and M2 on TB3 (M-NET transmission) 24–30 V DC?
- No → • Check wiring. • Check M-NET power circuit board.
- Yes ↓

Is the voltage of CNDC(PNK) on multi board 290–350 V DC?
- No → Turn off the incoming power supply and check the resistance of PTC1,2 on the Power circuit board.
  - PTC1,2 = open ?
    - No (normal) → • Check wiring. • Check power circuit board. • Retry after the temperature of the PTC1,2 drops to 257°F[125°C] or less
    - Yes (open) → •Replace Noise filter board and check 52C-relay,wiring,power circuit board .
- Yes ↓

Is the voltage of the compressor (U-V, U-W and V-W) balanced?
- No → • Check wiring. • Check model setting switch SW4 on the multi controller board. • Replace power board.
- Yes ↓

Normal

TIME CHART

Power supply	OFF	ON		208/230 V	
52C relay	OFF	ON			
COMP (Hz)	0Hz		ex. 48 Hz	min Hz	
Bus bar voltage (DC)	0V	290/325 V	330–350 V	290/325 V	
PAM	OFF		ON	OFF	
		power on	starts	stop	

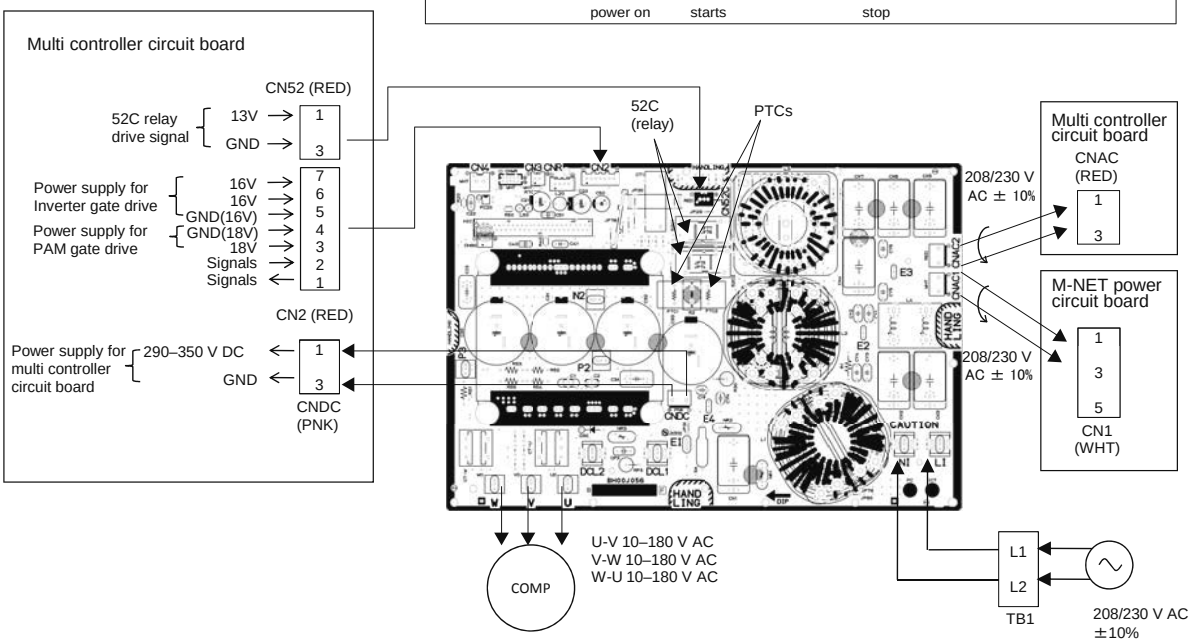

Check method of M-NET power circuit board

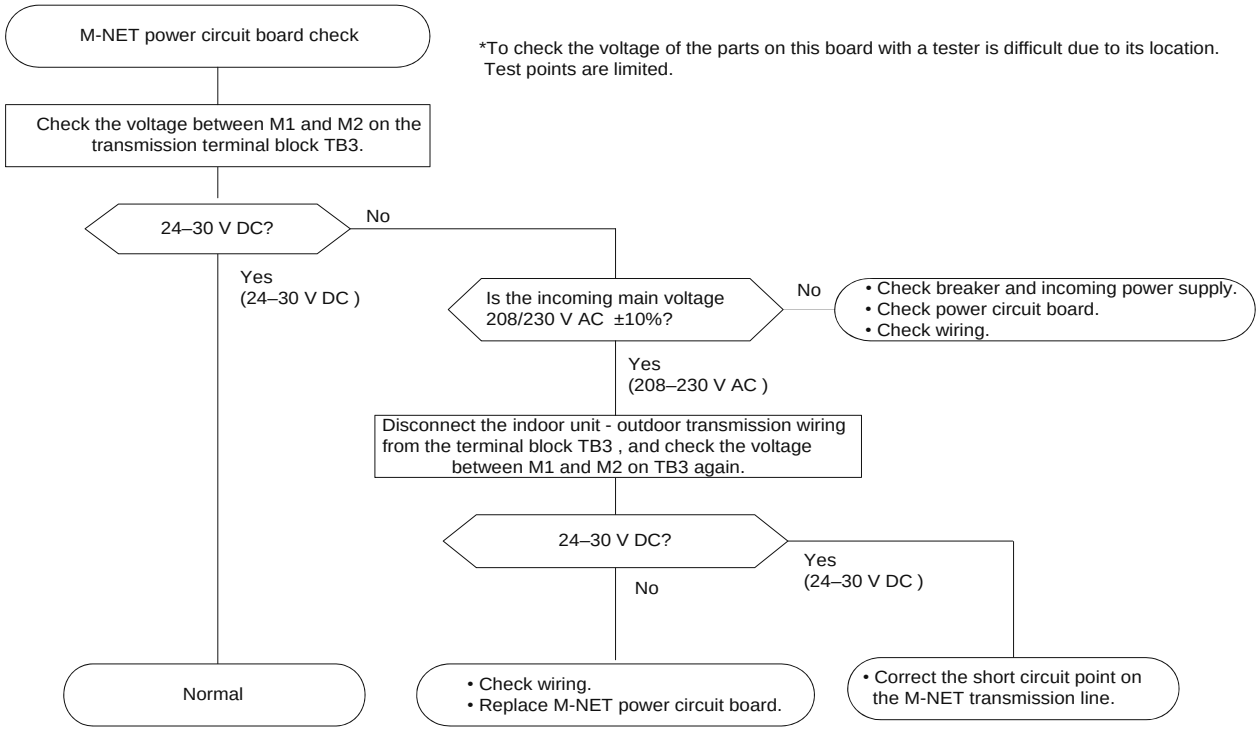

M-NET power circuit board

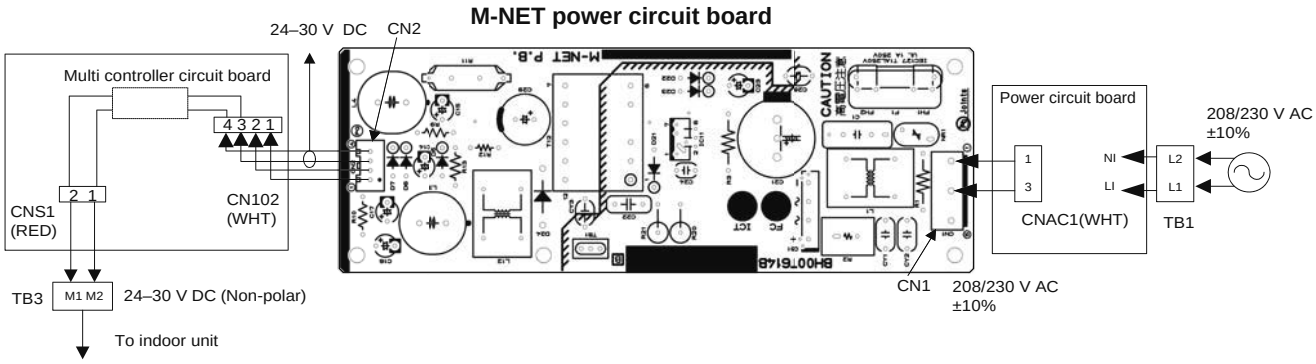

8-8. HOW TO CHECK THE COMPONENTS

<Thermistor feature chart>

Low temperature thermistors

- Thermistor <Hic pipe> (TH2)
- Thermistor <Outdoor liquid pipe> (TH3)
- Thermistor <Suction pipe> (TH6)
- Thermistor <Ambient> (TH7)

Thermistor R0 = 15 kΩ ± 3 %
B constant = 3480 ± 2 %

$$R_t = 15\exp\{3480(\frac{1}{273+t} - \frac{1}{273})\}$$

32°F [0℃]	15 kΩ	86°F [30℃]	4.3 kΩ
50°F [10℃]	9.6 kΩ	104°F [40℃]	3.0 kΩ
68°F [20℃]	6.3 kΩ		
77°F [25℃]	5.2 kΩ		

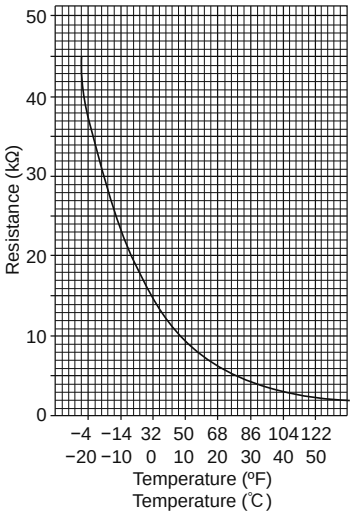

High temperature thermistor

- Thermistor <Compressor> (TH4)

Thermistor R120 = 7.465 kΩ ± 2 %
B constant = 4057 ± 2 %

$$R_t = 7.465\exp\{4057(\frac{1}{273+t} - \frac{1}{393})\}$$

68°F [20℃]	250 kΩ	158°F [70℃]	34 kΩ
86°F [30℃]	160 kΩ	176°F [80℃]	24 kΩ
104°F [40℃]	104 kΩ	194°F [90℃]	17.5 kΩ
122°F [50℃]	70 kΩ	212°F [100℃]	13.0 kΩ
140°F [60℃]	48 kΩ	230°F [110℃]	9.8 kΩ

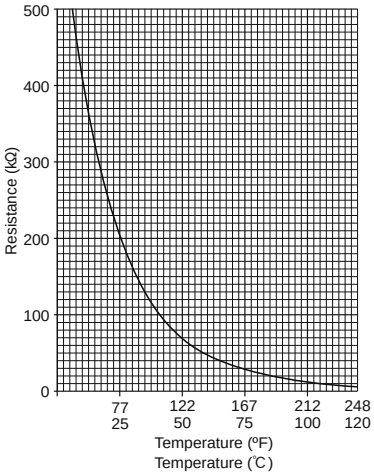

<LOW PRESSURE SENSOR>

• Comparing the Low Pressure Sensor Measurement and Gauge Pressure

By configuring the digital display setting switch (SW1) as shown in the figure below, the pressure as measured by the low pressure sensor appears on the LED1 on the control board.

SW1

The figure at left shows that the switches 1 through 4 are set to ON and 5 through 8 are set to OFF.

(1) While the outdoor unit is stopped, compare the gauge pressure and the pressure displayed on self-diagnosis LED1, 2.

1) When the gauge pressure is between 0 and 14 PSIG [0.098 MPaG], internal pressure is caused due to gas leak.
2) When the pressure displayed on self-diagnosis LED1, 2 is between 0 and 14 PSIG [0.098 MPaG], the connector may be defective or be disconnected. Check the connector and go to (4).
3) When the outdoor temperature is 86°F [30°C] or less, and the pressure displayed on self-diagnosis LED1, 2 exceeds 247 PSIG [1.7 MPaG], go to (3).
   When the outdoor temperature exceeds 86°F [30°C], and the pressure displayed on self-diagnosis LED1, 2 exceeds 247 PSIG [1.7 MPaG], go to (5).
4) If other than 1), 2) or 3), compare the pressures while the sensor is running. Go to (2).

(2) Compare the gauge pressure and the pressure displayed on self-diagnosis LED1, 2 after 15 minutes have passed since the start of operation. (Com pare them by PSIG [MPaG] unit.)

1) When the difference between both pressures is within 29 PSIG [0.2MPaG], both the low pressure sensor and the control board are normal.
2) When the difference between both pressures exceeds 29 PSIG [0.2MPaG], the low pressure sensor has a problem. (performance deterioration)
3) When the pressure displayed on the self-diagnosis LED1, 2 does not change, the low pressure sensor has a problem.

(3) Remove the low pressure sensor from the control board to check the pressure with the self-diagnosis LED1, 2 display.

1) When the pressure displayed on the self-diagnosis LED1,2 is between 0 and 14 PSIG [0.098 MPaG], the low pressure sensor has a problem.
2) When the pressure displayed on self-diagnosis LED1, 2 is approximately 247 PSIG [1.7 MPaG], the control board has a problem.

(4) Remove the low pressure sensor from the control board, and short-circuit between the pin 2 and pin 3 connectors (63LS) to check the pressure with the self-diagnosis LED1, 2.

1) When the pressure displayed on the self-diagnosis LED1, 2 exceeds 247 PSIG [1.7 MPaG], the low pressure sensor has a problem.
2) If other than 1), the control board has a problem.

(5) Remove the high pressure sensor (63HS) from the control board, and insert it into the connector for the low pressure sensor (63LS) to check the pressure with the self-diagnosis LED1, 2.

1) When the pressure displayed on the self-diagnosis LED1, 2 exceeds 247 PSIG [1.7 MPaG], the control board has a problem.
2) If other than 1), go to (2).

• Low Pressure Sensor Configuration (63LS)

The low pressure sensor consists of the circuit shown in the figure below. If 5 V DC is applied between the red and the black wires, voltage corresponding to the pressure between the white and the black wires will be output, and the value of this voltage will be converted by the microcomputer. The output voltage is 0.173 V per 14 PSIG [0.098 MPaG].

Note:
The pressure sensor on the body side is designed to connect to the connector. The connector pin number on the body side is different from that on the control board side.

	Body side	Control board side
Vcc	Pin 1	Pin 3
Vout	Pin 2	Pin 2
GND	Pin 3	Pin 1

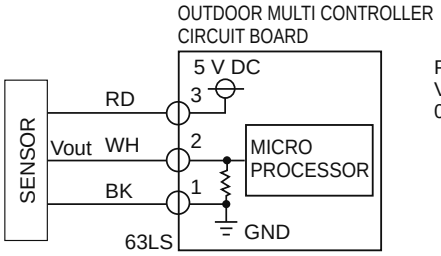

③–① : 5 V (DC)
②–① : Output Vout (DC)

Pressure: 0–247 PSIG [1.7 MPaG]
Vout: 0.5–3.5 V
0.173 V/14 PSIG [0.098 MPaG]

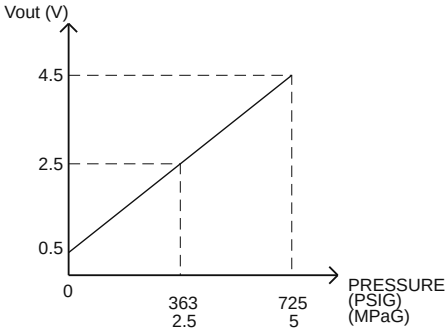

<HIGH PRESSURE SENSOR>

• Comparing the High Pressure Sensor Measurement and Gauge Pressure

By configuring the digital display setting switch (SW1) as shown in the figure below, the pressure as measured by the high pressure sensor appears on the LED1, 2 on the control board.

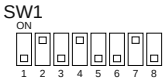

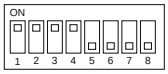

The figure at left shows that the switches 1 through 4 are set to ON and 5 through 8 are set to OFF.

(1) While the outdoor unit is stopped, compare the gauge pressure and the pressure displayed on self-diagnosis LED1, 2.

1) When the gauge pressure is between 0 and 14 PSIG [0.098 MPaG], internal pressure is caused due to gas leak.
2) When the pressure displayed on self-diagnosis LED1, 2 is between 14 PSIG [0.098 MPaG], the connector may be defective or be disconnected. Check the connector and go to (4).
3) When the pressure displayed on self-diagnosis LED1, 2 exceeds 725 PSIG [5.0 MPaG], go to (3).
4) If other than 1), 2) or 3), compare the pressures while the sensor is running. Go to (2).

(2) Compare the gauge pressure and the pressure displayed on self-diagnosis LED1,2 after 15 minutes have passed since the start of operation. (Compare them by PSIG [MPaG] unit.)

1) When the difference between both pressures is within 36 PSIG [0.25 MPaG], both the high pressure sensor and the control board are normal.
2) When the difference between both pressures exceeds 36 PSIG [0.25 MPaG], the high pressure sensor has a problem. (performance deterioration)
3) When the pressure displayed on self-diagnosis LED1, 2 does not change, the high pressure sensor has a problem.

(3) Remove the high pressure sensor from the control board to check the pressure on the self-diagnosis LED1, 2.

1) When the pressure displayed on self-diagnosis LED1, 2 is between 0 and 14 PSIG [0.098 MPaG], the high pressure sensor has a problem.
2) When the pressure displayed on self-diagnosis LED1, 2 is approximately 725 PSIG [5.0 MPaG], the control board has a problem.

(4) Remove the high pressure sensor from the control board, and short-circuit between the pin 2 and pin 3 connectors (63HS) to check the pressure with self-diagnosis LED1, 2.

1) When the pressure displayed on the self-diagnosis LED1, 2 exceeds 725 PSIG [5.0 MPaG], the high pressure sensor has a problem.
2) If other than 1), the control board has a problem.

• High Pressure Sensor Configuration (63HS)

The high pressure sensor consists of the circuit shown in the figure below. If 5 V DC is applied between the white and the black wires, voltage corresponding to the pressure between the blue and the black wires will be output, and the value of this voltage will be converted by the microcomputer. The output voltage is 0.078 V per 14 PSIG [0.098 MPaG].

Note:
The pressure sensor on the body side is designed to connect to the connector. The connector pin number on the body side is different from that on the control board side.

	Body side	Control board side
Vcc	Pin 1	Pin 3
Vout	Pin 2	Pin 2
GND	Pin 3	Pin 1

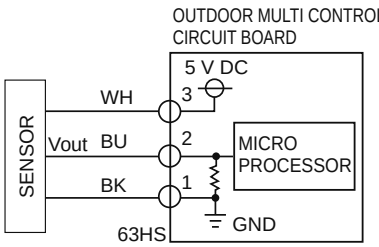

③–①: 5 V (DC)
②–①: Output Vout (DC)

Pressure: 0–725 PSIG [5.0 MPaG]
Vout: 0.5–4.5 V
0.078 V/14 PSIG [0.098 MPaG]

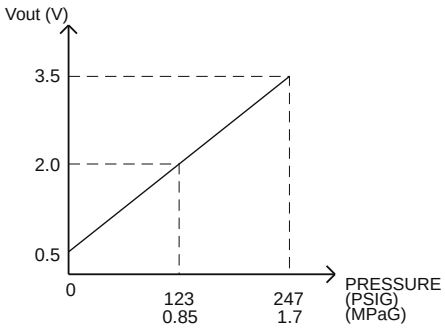

8-9. TEST POINT DIAGRAM

Outdoor multi controller circuit board

PUMY-P36NKMU1 **PUMY-P48NKMU1**
PUMY-P36NKMU1-BS **PUMY-P48NKMU1-BS**

<CAUTION> TEST POINT ① is high voltage.

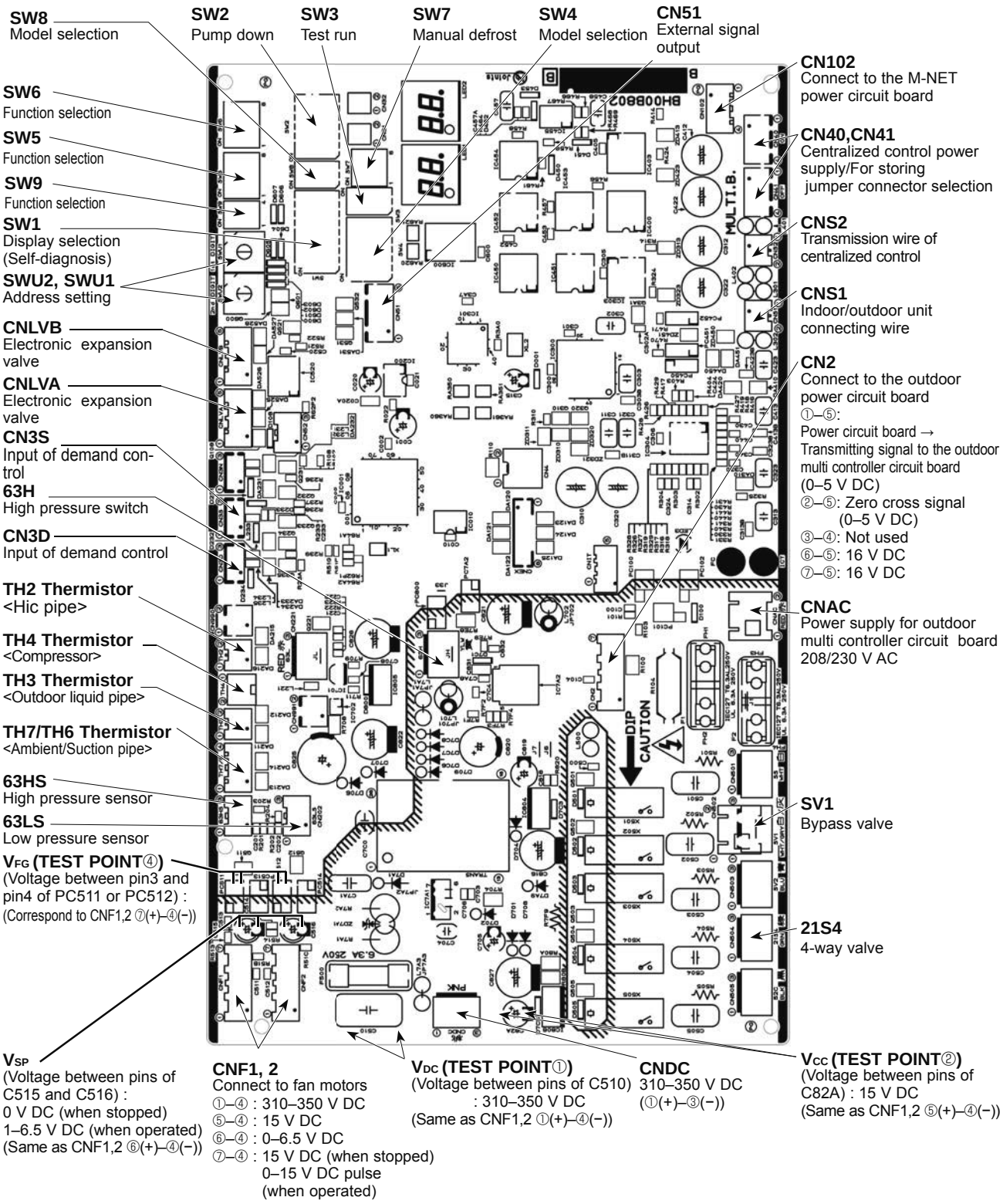

Outdoor power circuit board
PUMY-P36NKMU1
PUMY-P48NKMU1
PUMY-P36NKMU1-BS
PUMY-P48NKMU1-BS

Brief Check of POWER MODULE
Usually, they are in a state of being short-circuited if they are broken.
Measure the resistance in the following points (connectors, etc.).
If they are short-circuited, it means that they are broken.
1. Check of POWER MODULE
① Check of DIODE circuit
R - L1, S - L1, R - N1, S - N1
② Check of IGBT circuit
L2 - N1
③ Check of INVERTER circuit
P - U, P - V, P - W, N1 - U, N1 - V, N1 - W
Note: The marks R, S, L1, L2, P, N1, U, V and W shown in the diagram are not actually printed on the board.

CN2
Connect to the outdoor multi controller circuit board (CN2)
①–⑤:Transmitting signal to outdoor multi controller circuit board (0–5 V DC)
②–⑤: Zero cross signal (0–5 V DC)
③–④: 18 V DC
⑥–⑤: 16 V DC
⑦–⑤: 16 V DC

CN4
Connect to the outdoor multi controller circuit board (CN4)

Power module

CN52C
52C driving signal
Connect to the outdoor multi controller circuit board (CN52C)

CNDC
310–350 V DC (①+, ③−)
Connect to the outdoor multi controller circuit board (CNDC)

E2, E3
Connect to the electrical parts box

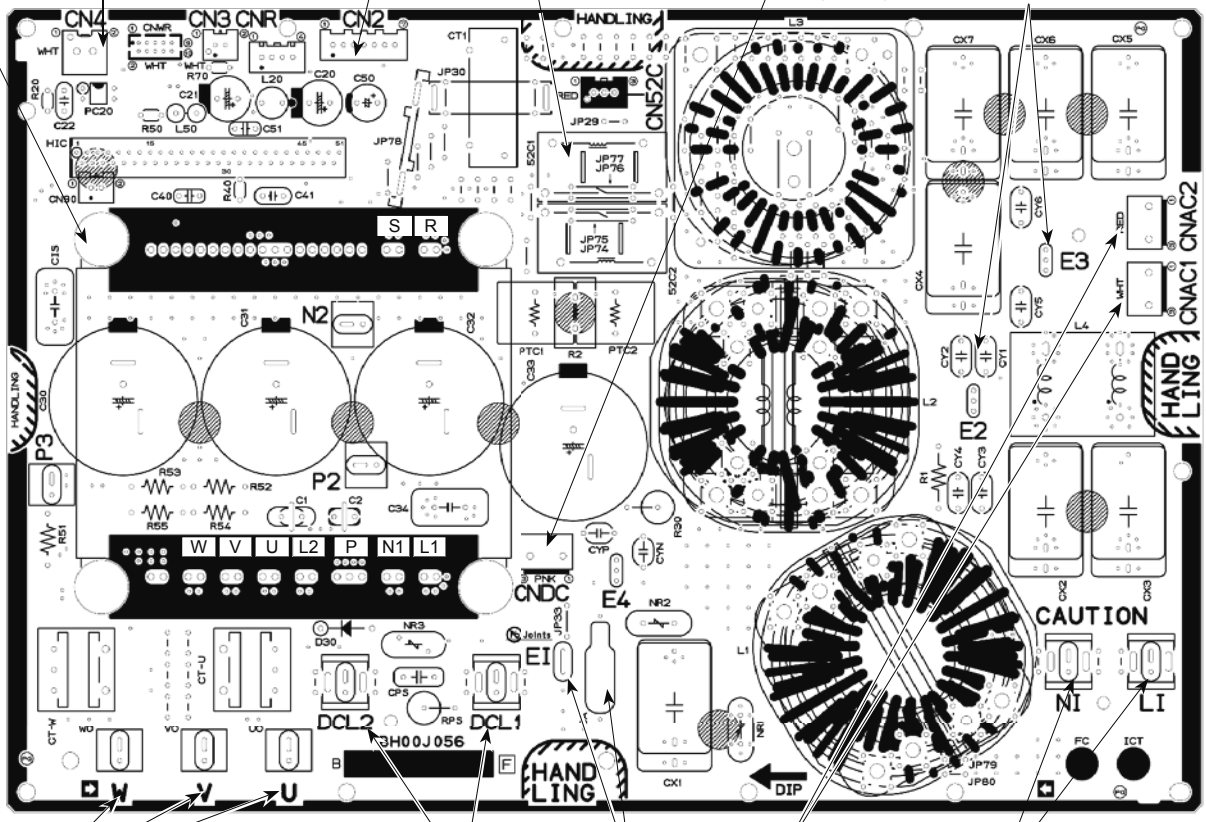

U/V/W
Connect to the compressor (MC) Voltage among phases: 10–180 V AC

DCL1, DCL2
Connect to DCL

EI, E4
Connect to the electrical parts box

CNAC1
208/230 V AC
Connect to the M-NET power circuit board (CN1)

CNAC2
208/230 V AC
Connect to the outdoor multi controller circuit board (CNAC)

NI, LI
Voltage of 230 V AC is input (Connect to the terminal block (TB1))

M-NET power circuit board

PUMY-P36NKMU1 **PUMY-P48NKMU1**

PUMY-P36NKMU1-BS **PUMY-P48NKMU1-BS**

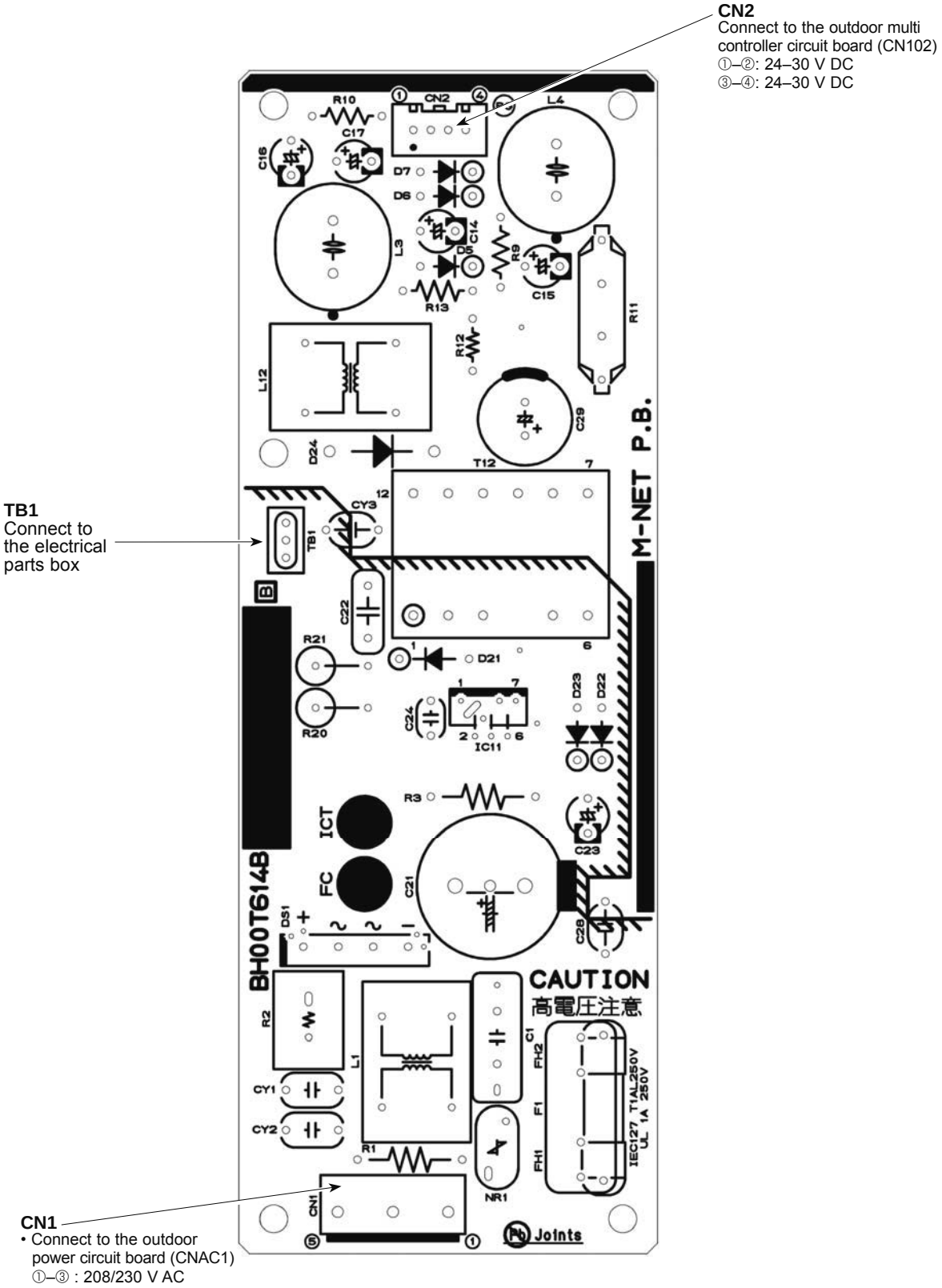

SW:setting
0....OFF
1....ON

No.	SW1 setting 12345678	Display mode	Display on the LED1, 2 (display data) 1	2	3	4	5	6	7	8	Notes
0	00000000	Relay output display	Compressor operation	52C	21S4	SV1	(SV2)			Always lighting	ON: light on OFF: light off
		Check display	0000–9999 (Alternating display of addresses and check code)								•When abnormality occurs, check display.
1	10000000	Indoor unit check status	No.1 unit check	No.2 unit check	No.3 unit check	No.4 unit check	No.5 unit check	No.6 unit check	No.7 unit check	No.8 unit check	Light on at time of abnormality
2	01000000	Protection input	High pressure abnormality	Superheat due to low discharge temperature	Compressor shell temperature abnormality	TH4 abnormality	TH3 abnormality	Outdoor fan rotation frequency abnormality	TH7 abnormality	TH8 abnormality	Display detected microprocessor protection or abnormality
3	11000000	Protection input	Heat sink overheating	Compressor over current interception	Voltage abnormality	Insufficient refrigerant amount abnormality	Current sensor/ primary current abnormality	63LS abnormality	63HS abnormality	start over current interception abnormality delay	
4	00100000	Protection input	Abnormality in the number of indoor units	Address double setting abnormality	Indoor unit capacity error	Over capacity	Indoor unit address error	Outdoor unit address error	Current sensor open/short	serial communication abnormality (outdoor unit)	
5	10100000	Abnormality delay display 1	High pressure abnormality delay	Superheat due to low discharge temperature delay	Compressor shell temperature abnormality delay	TH4 abnormality delay	TH3 abnormality delay	Outdoor fan rotation frequency abnormality delay	TH7 abnormality delay	TH8 abnormality delay	Display all abnormalities remaining in abnormality delay
6	01100000	Abnormality delay display 2	Heat sink overheating delay	Compressor over current interception delay	Voltage abnormality delay	Insufficient refrigerant amount abnormality delay	Current sensor/ primary current abnormality delay	63LS abnormality delay	63HS abnormality delay	start over current interception abnormality delay	
7	11100000	Abnormality delay display 3	63LS abnormality delay	TH2 abnormality delay	4-way valve abnormality delay	Delay caused by blocked valve in cooling mode	Power module abnormality delay	TH6 abnormality delay	Current sensor open/short delay		
8	00010000	Abnormality delay history 1	High pressure abnormality delay	Superheat due to low discharge temperature delay	Compressor shell temperature abnormality delay	TH4 abnormality delay	TH3 abnormality delay	Outdoor fan rotation frequency abnormality delay	TH7 abnormality delay	TH8 abnormality delay	Display all abnormalities remaining in abnormality delay
9	10010000	Abnormality delay history 2	Heat sink overheating delay	Compressor over current interception delay	Voltage abnormality delay	Insufficient refrigerant amount abnormality delay	Current sensor/ primary current abnormality delay	63LS abnormality delay	63HS abnormality delay	start over current interception abnormality delay	
10	01010000	Abnormality delay history 3	63LS abnormality delay	TH2 abnormality delay	4-way valve abnormality delay	Delay caused by blocked valve in cooling mode	Power module abnormality delay	TH6 abnormality delay	Current sensor open/short delay		
11	11010000	Abnormality code history 1 (the latest)	Alternating display of addresses 0000–9999 and abnormality code (including abnormality delay code)								• Display abnormalities up to present (including abnormality terminals) • History record in 1 is the latest; records become older in sequence; history record in 10 is the oldest.
12	00110000	Abnormality code history 2									
13	10110000	Abnormality code history 3									
14	01110000	Abnormality code history 4									
15	11110000	Abnormality code history 5									
16	00001000	Abnormality code history 6									
17	10001000	Abnormality code history 7									
18	01001000	Abnormality code history 8									
19	11001000	Abnormality code history 9									
20	00101000	Abnormality code history 10 (the oldest)									
21	10101000	Cumulative time	0–9999 (unit: 1 hour)								Display of cumulative compressor operating time
22	01101000	Cumulative time	0–9999 (unit: 10 hour)								
23	11101000	Outdoor unit operation display	Compressor energizing	Compressor operating prohibition	Compressor in operation	Abnormality detection					Light ON/Light OFF
24	00011000	Indoor unit operation mode	No.1 unit mode	No.2 unit mode	No.3 unit mode	No.4 unit mode	No.5 unit mode	No.6 unit mode	No.7 unit mode	No.8 unit mode	Cooling : light on, Heating: light blinking Stop fan: light off
25	10011000	Indoor unit operation display	No.1 unit operation	No.2 unit operation	No.3 unit operation	No.4 unit operation	No.5 unit operation	No.6 unit operation	No.7 unit operation	No.8 unit operation	Thermo ON : light on Thermo OFF : light off

Delay code	Abnormality delay	Delay code	Abnormality delay
1202	Discharge/Comp. temperature	1600	Discharge superheat (SHd)
	Thermistor <Compressor>(TH4)		Over charge refrigerant
1205	Thermistor <Outdoor liquid pipe> (TH3)	1601	Insufficient refrigerant
1211	Thermistor <Suction pipe> (TH6)		Closed cooling valve
1214	Thermistor <Heat sink> (TH8)	1608	4-way valve disconnection
1221	Thermistor <Ambient> (TH7)	4310	Current sensor open/short
1222	Thermistor <HIC> (TH2)	4320	Undervoltage, overvoltage, or power module
1400	Low pressure sensor	4330	Heat sink temperature
1402	High pressure (63H)	4350	Power module
	High pressure sensor (63HS)	4500	Outdoor fan motor

No.	SW1 setting 12345678	Display mode	Display on the LED1, 2 (display data) 1	2	3	4	5	6	7	8	Notes
26	01011000	Capacity code (No. 1 indoor unit)	0–255								•Display of indoor unit capacity code •The No. 1 unit will start from the M-NET address with the lowest number
27	11011000	Capacity code (No. 2 indoor unit)									
28	00111000	Capacity code (No. 3 indoor unit)									
29	10111000	Capacity code (No. 4 indoor unit)									
30	01111000	Capacity code (No. 5 indoor unit)									
31	11111000	IC1 operation mode	STOP	Fan	Cooling thermo-ON	Cooling thermo-OFF	Heating thermo-ON	Heating thermo-OFF			•Display of indoor unit operating mode
32	00000100	IC2 operation mode									
33	10000100	IC3 operation mode									
34	01000100	IC4 operation mode									
35	11000100	IC5 operation mode									
36	00100100	OC operation mode	Compressor ON/OFF	Heating/Cooling	Abnormal/normal	DEFROST/NO	Refrigerant pull back/no	Excitation current/no	3-min.delay/no		Light on/light off
37	10100100	External connection status	CN3N1–3 input	CN3N1–2 input	CN3S1–2 input	CN3D1-3 input	CN3D1-2 input				Input: light off No input: light on
38	01100100	Communication demand capacity	0–255 (%)								Display of communication demand capacity
39	11100100	Number of compressor ON/OFF	0000–9999 (unit: x10)								Display a count of compressor operation/stop
40	00010100	Compressor operating current	0–999.9 (Arms)								Display detected current
41	10010100	Input current of outdoor unit									
42	01010100	Thermo-ON operating time	0000–9999 (unit: x10)								Display cumulative time of thermo-ON operation
43	11010100	Total capacity of thermo-ON	0–255								Display total capacity code of indoor units inthermo-ON
44	00110100	Number of indoor units	0–255								Display number of connected indoor units
45	10110100	DC bus voltage	0–999.9 (V)								Display bus voltage
46	01110100	State of LEV control	Td over heat prevention	SHd decrease prevention	Min.Sj correction depends on Td	Min.Sj correction depends on Shd	LEV opening correction depends on Pd	LEV opening correction depends on Td	Correction of high compression ratio prevention		Display active LEV control
47	11110100	State of compressor frequency control 1	Condensing temperature limit control	Compressor temperature control		Discharge temp. (heating) backup control	Pd abnormality control (heating)	Pd Back up control(heating)		Freeze prevention control at the begining of SHd	Display active compressor frequency control
48	00001100	State of compressor frequency control 2	Heat sink over heat prevention control	Secondary current control	Input current control		Frequency restrain of receipt voltage change	Low pressure decrease prevention	Hz-up inhibit control at the begining of SHd		
49	10001100	Protection input	63LS abnormality	HIC abnormality		Frozen protection	4-way valve disconnection abnormality	Delay caused by blocked valve in cooling mode	TH6 abnormality	Power module abnormality	
50	01001100	The second current value when microprocessor of POWER BOARD abnormality is detected	0–999.9[Arms]								Display data at time of abnormality
51	11001100	Heatsink temperature when microprocessor of POWER BOARD abnormality is detected	−99.9–999.9 (°F)								

State of compressor frequency(Hz) control	Content
Discharge pressure control	Hz control by pressure limitation
Compressor temperature control	Hz control by discharge temperature limitation
SV control	Hz control by bypass valve
Abnormal rise of Pd control	Control that restrains abnormal rise of discharge pressure
Heat sink over heat prevention control	Heat sink over heat prevention control
Secondary current control	Secondary current control
Input current contol	Input current contol
Hz correction of receipt voltage decrease prevention	Max.Hz correction control due to voltage decrease
Hz restrain of receipt voltage change	Max.Hz correction control due to receipt voltage change

No.	SW1 setting	Display mode	Display on the LED1, 2 (display data)								Notes
	12345678		1	2	3	4	5	6	7	8	
52	00101100	Outdoor LEV-A opening pulse	0–2000 (pulse)								Display of opening pulse of outdoor LEV
53	10101100	Outdoor LEV-A opening pulse abnormality delay									
54	01101100	Outdoor LEV-A opening pulse abnormality									
55	11101100	Outdoor LEV-B opening pulse									
56	00011100	Outdoor LEV-B opening pulse abnormality delay									
57	10011100	Outdoor LEV-B opening pulse abnormality									
58	01011100	63LS (Low pressure)	−99.9–999.9 (PSIG)								Display of data from sensor and thermistor
59	11011100	63LS abnormality delay	−99.9–999.9 (PSIG)								
60	00111100	63 LS abnormality									
61	10111100	TH2 (Hic pipe)	−99.9–999.9 (°F)								
62	01111100	TH2(Hic) abnormality delay	−99.9–999.9 (°F)								
63	11111100	TH2 (Hic) abnormality									
64	00000010	Operational frequency	0–255 (Hz)								Display of actual operating frequency
65	10000010	Target frequency	0–255 (Hz)								Display of target frequency
66	01000010	Outdoor fan control step number	0–15								Display of number of outdoor fan control steps (target)
69	10100010	IC1 LEV Opening pulse	0–2000 (pulse)								Display of opening pulse of indoor LEV
70	01100010	IC2 LEV Opening pulse									
71	11100010	IC3 LEV Opening pulse									
72	00010010	IC4 LEV Opening pulse									
73	10010010	IC5 LEV Opening pulse									
74	01010010	High pressure sensor (Pd)	−99.9–999.9 (PSIG)								Display detected data of outdoor unit sensors and thermistors
75	11010010	TH4(Compressor)(Td) data	−99.9–999.9 (°F)								
76	00110010	TH6(Suction pipe) (ET) data									
77	10110010	TH7(Ambient) data									
78	01110010	TH3(Outdoor liquid pipe) data									
80	00001010	TH8(Heat sink) data									
81	10001010	IC1 TH23 (Gas)	−99.9–999.9 (°F) (When indoor unit is not connected, it is displayed as0.)								Display detected data of indoor unit thermistor
82	01001010	IC2 TH23 (Gas)									
83	11001010	IC3 TH23 (Gas)									
84	00101010	IC4 TH23 (Gas)									
85	10101010	IC5 TH23 (Gas)									

No.	SW1 setting 12345678	Display mode	Display on the LED1, 2 (display data) 1	2	3	4	5	6	7	8	Notes
86	01101010	IC1 TH22 (Liquid)	−99.9–999.9 (°F) (When the indoor unit is not connected, it is displayed as 0.)								Display detected data of indoor unit thermistors
87	11101010	IC2 TH22 (Liquid)									
88	00011010	IC3 TH22 (Liquid)									
89	10011010	IC4 TH22 (Liquid)									
90	01011010	IC5 TH22 (Liquid)									
91	11011010	IC1 TH21 (Intake)									
92	00111010	IC2 TH21 (Intake)									
93	10111010	IC3 TH21 (Intake)									
94	01111010	IC4 TH21 (Intake)									
95	11111010	IC5 TH21 (Intake)									
96	00000110	Outdoor SC (cooling)	−99.9–999.9 (℃)								Display of outdoor subcool (SC) data
97	10000110	Target subcool step	−2–4								Display of target subcool step data
98	01000110	IC1 SC/SH	−99.9–999.9 (℃) during heating: subcool (SC)/during cooling: superheat (SH) (Fixed to "0" during cooling operation)								Display of indoor SC/SH data
99	11000110	IC2 SC/SH									
100	00100110	IC3 SC/SH									
101	10100110	IC4 SC/SH									
102	01100110	IC5 SC/SH									
103	11100110	Discharge superheat (SHd)	−99.9–999.9 (℃)								Display of outdoor discharge superheat (SHd) data
105	10010110	Target Pd display (heating) kgf/F	Pdm (0.0–30.0) (kgf/cm²)								Display of all control target data
106	01010110	Target ET display (cooling)	ETm (−2.0–23.0) (℃)								
107	11010110	Target outdoor SC (cooling)	SCm (0.0–20.0) (℃)								
108	00110110	Target indoor SC/SH (IC1)	SCm/SHm (0.0–20.0) (℃)								
109	10110110	Target indoor SC/SH (IC2)									
110	01110110	Target indoor SC/SH (IC3)									
111	11110110	Target indoor SC/SH (IC4)									
112	00001110	Target indoor SC/SH (IC5)									
113	10001110	Indoor unitcheck status (IC9-12)	No.9 unit check	No.10 unit check	No.11 unit check	No.12 unit check					Light on at time of abnormality
114	01001110	Indoor unit operation mode (IC9-12)	No.9 unit mode	No.10 unit mode	No.11 unit mode	No.12 unit mode					COOL/DRY: light on HEAT: light blinking FAN/STOP: light off
115	11001110	Indoor unit operation display (IC9-12)	No.9 unit operation	No.10 unit operation	No.11 unit operation	No.12 unit operation					Thermo-ON: light on Thermo-OFF: light off
116	00101110	IC9 operation mode	STOP	Fan	Cooling Thermo-ON	Cooling thermo-OFF	Heating thermo-ON	Heating thermo-OFF			Display of indoor unit operation mode
117	10101110	IC10 operation mode									
118	01101110	IC11 operation mode									
119	11101110	IC12 operation mode									
120	00011110	Target indoor SC/SH (IC9)	SCm/SHm (0.0–20.0) (℃)								Display of all control target data
121	10011110	Target indoor SC/SH (IC10)									
122	01011110	Target indoor SC/SH (IC11)									
123	11011110	Target indoor SC/SH (IC12)									
124	00111110	IC9 LEV opening pulse abnormality delay	0–2000 (pulse)								Display of opening pulse of indoor LEV at time of abnormality delay
125	10111110	IC10 LEV opening pulse abnormality delay									
126	01111110	IC11 LEV opening pulse abnormality delay									
127	11111110	IC12 LEV opening pulse abnormality delay									

No.	SW1 setting 12345678	Display mode	Display on the LED1, 2 (display data) 1	2	3	4	5	6	7	8	Notes
128	00000001	Actual frequency of abnormality delay	0–255 (Hz)								Display of actual frquency at time of abnormality delay
129	10110001	Fan step number at time of abnormality delay	0–15								Display of fan step number at time of abnormality delay
131	11000001	IC1 LEV opening pulse abnormality delay	0–2000 (pulse)								Delay of opening pulse of indoor LEV at time of abnormality delay
132	00100001	IC2 LEV opening pulse abnormality delay									
133	10100001	IC3 LEV opening pulse abnormality delay									
134	01100001	IC4 LEV opening pulse abnormality delay									
135	11100001	IC5 LEV opening pulse abnormality delay									
136	00010001	High pressure sensor data at time of abnormality delay kgf/cm2	−99.9–999.9 (PSIG)								Display of data from High pressure sensor, all thermistors, and SC/SH at time of abnormality delay
137	10010001	TH4 (Compressor) sensor data at time of abnormality delay °C	−99.9–999.9 (°F)								
138	01010001	TH6 (Suction pipe) sensor data at time of abnormality delay °C									
139	11010001	TH3 (Outdoor liquid pipe) sensor data at time of abnormality delay °C									
140	00110001	TH8 (Heat sink) sensor data at time of abnormality delay °C									
141	10110001	OC SC (cooling) at time of abnormality delay °C	−99.9–999.9(℃) During heating: subcool (SC) During cooling; superheat (SH) (Fixed to "0" during cooling operation)								
142	01110001	IC1 SC/SH at time of abnormality delay °C									
143	11110001	IC2 SC/SH at time of abnormality delay °C									
144	00001001	IC3 SC/SH at time of abnormality delay °C									
145	10001001	IC4 SC/SH at time of abnormality delay °C									
146	01001001	IC5 SC/SH at time of abnormality delay °C									
147	11001001	IC9 SC/SH at time of abnormality delay °C									
148	00100001	IC10 SC/SH at time of abnormality delay °C									
149	10101001	IC11 SC/SH at time of abnormality delay °C									
150	01101001	IC12 SC/SH at time of abnormality delay °C									

No.	SW1 setting 12345678	Display mode	Display on the LED1, 2 (display data) 1	2	3	4	5	6	7	8	Notes
151	11101001	IC9 LEV opening pulse at time of abnormality	0–2000 (pulse)								Display of opening pulse of indoor LEV at time of abnormality
152	00011001	IC10 LEV opening pulse at time of abnormality									
153	10011001	IC11 LEV opening pulse at time of abnormality									
154	01011001	IC12 LEV opening pulse at time of abnormality									
155	11011001	IC9 SC/SH at time of abnormality	−99.9–999.9(℃) During heating: subcool (SC) During cooling; superheat (SH) (Fixed to "0" during cooling operation)								Display of indoor SC/SH data at time of abnormality
156	00111001	IC10 SC/SH at time of abnormality									
157	10111001	IC11 SC/SH at time of abnormality									
158	01111001	IC12 SC/SH at time of abnormality									
159	11111001	IC9 Capacity code	0–255								Display of indoor unit capacity code The No.1 unit will start from the M-NET address with the lowest number
160	00000101	IC10 Capacity code									
161	10000101	IC11 Capacity code									
162	01000101	IC12 Capacity code									
163	11000101	IC9 SC/SH	−99.9–999.9(℃) During heating: subcool (SC) During cooling; superheat (SH) (Fixed to "0" during cooling operation)								Display of indoor SC/SH data
164	00100101	IC10 SC/SH									
165	10100101	IC11 SC/SH									
166	01100101	IC12 SC/SH									
170	01010101	ROM version monitor	0.00–99.99 (ver)								Display of version data of ROM
171	11010101	ROM type									Display of ROM type
172	00110101	Check sum mode	0000–FFFF								Display of check sum code of ROM
173	10110101	IC9 TH23 (Gas)	−99.9–999.9 (°F)								Display detected data of indoor unit thermistors
174	01110101	IC10 TH23 (Gas)									
175	11110101	IC11 TH23 (Gas)									
176	00001101	IC12 TH23 (Gas)									
177	10001101	IC9 TH22 (Liquid)									
178	01001101	IC10 TH22 (Liquid)									
179	11001101	IC11 TH22 (Liquid)									
180	00101101	IC12 TH22 (Liquid)									
181	10101101	Backup heating determination value "a"									
182	01101101	Backup heating determination value "b"									
183	11101101	Backup heating determination value "c"									
184	00011101	Backup heating determination value "d"									
185	10011101	IC9 TH21 (Intake)									
186	01011101	IC10 TH21 (Intake)									
187	11011101	IC11 TH21 (Intake)									
188	00111101	IC12 TH21 (Intake)									

No.	SW1 setting 12345678	Display mode	Display on the LED1, 2 (display data) 1	2	3	4	5	6	7	8	Notes
189	10111101	History of voltage error (U9/4220)	-	-	PAM error	Converter Fault	Power synchronization signal error	L1 open phase error	Under voltage error	Over voltage error	
192	00000011	Actual frequency of abnormality	0–255 (Hz)								Display of actual frequency at time of abnormality
193	10000011	Fan step number at time of abnormality	0–15								Display of fan step number at time of abnormality
195	11000011	IC1 LEV opening pulse at time of abnormality	0–2000 (pulse)								Display of opening pulse of indoor LEV at time of abnormality
196	00100011	IC2 LEV opening pulse at time of abnormality									
197	10100011	IC3 LEV opening pulse at time of abnormality									
198	01100011	IC4 LEV opening pulse at time of abnormality									
199	11100011	IC5 LEV opening pulse at time of abnormality									
200	00010011	High pressure sensor data at time of abnormality	−99.9–999.9 (PSIG)								Display of data from High pressure sensor, all thermistors, and SC/SH at time of abnormality.
201	10010011	TH4 (Compressor) sensor data at time of abnormality	−99.9–999.9 (°F)								
202	01010011	TH6 (Suction pipe) sensor data at time of abnormality									
203	11010011	TH3 (Outdoor liquid pipe) sensor data at time of abnormality									
204	00110011	TH8 (Heat sink) sensor data at time of abnormality									
205	10110011	OC SC (cooling) at time of abnormality	−99.9–999.9(℃) During heating: subcool (SC) During cooling; superheat (SH) (Fixed to "0" during cooling operation)								Display of indoor SC/SH data at time of abnormality
206	01110011	IC1 SC/SH at time of abnormality									
207	11110011	IC2 SC/SH at time of abnormality									
208	00001011	IC3 SC/SH at time of abnormality									
209	10001011	IC4 SC/SH at time of abnormality									
210	01001011	IC5 SC/SH at time of abnormality									
211	11001011	IC6 Capacity code	0–255								Display of indoor unit capacity code The No.1 unit will start from the M-NET address with the lowest number
212	00101011	IC7 Capacity code									
213	10101011	IC8 Capacity code									
214	01101011	IC6 operation mode	STOP	Fan	Cooling thermo-ON	Cooling thermo-OFF	Heating thermo-ON	Heating thermo-OFF			Display of indoor unit operation mode
215	11101011	IC7 operation mode									
216	00011011	IC8 operation mode									

No.	SW1 setting 12345678	Display mode	Display on the LED1, 2 (display data) 1	2	3	4	5	6	7	8	Notes
217	10011011	IC6 LEV opening pulse	0–2000 (pulse)								Display of opening pulse of indoor LEV
218	01011001	IC7 LEV opening pulse									
219	11011001	IC8 LEV opening pulse									
220	00111011	IC6 TH23 (Gas)	−99.9–999.9 (°F)								Display detected data of indoor unit thermistor
221	10111011	IC7 TH23 (Gas)									
222	01111011	IC8 TH23 (Gas)									
223	11111011	IC6 TH22 (liquid)									
224	00000111	IC7 TH22 (liquid)									
225	10000111	IC8 TH22(liquid)									
226	01000111	IC6 TH21 (intake)									
227	11000111	IC7 TH21 (intake)									
228	00100111	IC8 TH21 (intake)									
229	10100111	IC6 SC/SH	−99.9–999.9 (℃) during heating: subcool (SC)/during cooling: superheat (SH) (Fixed to "0" during cooling operation)								Display of indoor SC/SH data
230	01100111	IC7 SC/SH									
231	11100111	IC8 SC/SH									
232	00010111	Target indoor SC/SH (IC6)	SCm/SHm (0.0–20.0) (℃)								Display of all control target data
233	10010111	Target indoor SC/SH (IC7)									
234	01010111	Target indoor SC/SH (IC8)									
235	11010111	IC6 LEV opening pulse abnormality delay	0–2000 (pulse)								Display of opening pulse of indoor LEV at time of abnormality delay
236	00110111	IC7 LEV opening pulse abnormality delay									
237	10110111	IC8 LEV opening pulse abnormality delay									
238	01110111	IC6 SC/SH at time of abnormality delay	−99.9–999.9 (℃) During heating: subcool (SC) During cooling: superheat (SH) (Fixegd to "0" during cooling operation)								Display of indoor SC/SH data at time of abnormality delay
239	11110111	IC7 SC/SH at time of abnormality delay									
240	00001111	IC8 SC/SH at time of abnormality delay									
241	10001111	IC6 LEV opening pulse at time of abnormality	0–2000 (pulse)								Display of opening pulse of indoor LEV at time of abnormality
242	01001111	IC7EV opening pulse at time of abnormality									
243	11001111	IC8 LEV opening pulse at time of abnormality									
244	00101111	IC6 SC/SH at time of abnormality	−99.9–999.9 (℃) During heating: subcool (SC) During cooling: superheat (SH) (Fixed to "0" during cooling operation)								Display of indoor SC/SH data at time of abnormality delay
245	10101111	IC7 SC/SH at time of abnormality									
246	01101111	IC8 SC/SH at time of abnormality									
250	01011111	IC9 LEV opening pulse	0–2000 (pulse)								Display of opening pulse of indoor LEV
251	11011111	IC10 LEV opening pulse									
252	00111111	IC11 LEV opening pulse									
253	10111111	IC12 LEV opening pulse									

9 ELECTRICAL WIRING

This chapter provides an introduction to electrical wiring for the CITY MULTI-S series, together with notes concerning power wiring, wiring for control (transmission wires and remote controller wires), and the frequency converter.

9-1. OVERVIEW OF POWER WIRING

(1) Use a separate power supply for the outdoor unit and indoor unit.
(2) Bear in mind ambient conditions (ambient temperature, direct sunlight, rain water,etc.) when proceeding with the wiring and connections.
(3) The wire size is the minimum value for metal conduit wiring. The power cord size should be 1 rank thicker consideration of voltage drops. Make sure the power-supply voltage does not drop more than 10 %.
(4) Specific wiring requirements should adhere to the wiring regulations of the region.
(5) Power supply cords of parts of appliances for outdoor use shall not be lighter than polychloroprene sheathed flexible cord (design 60245 IEC57). For example, use wiring such as YZW.
(6) Install an earth longer than other cables.

⚠ Warning:
- Be sure to use specified wires to connect so that no external force is imparted to terminal connections. If connections are not fixed firmly, it may cause heating or fire.
- Be sure to use the appropriate type of overcurrent protection switch. Note that generated overcurrent may include some amount of direct current.

⚠ Caution:
- Some installation site may require attachment of an earth leakage breaker. If no earth leakage breaker is installed, it may cause an electric shock.
- Do not use anything other than breaker and fuse with correct capacity. Using fuse and wire or copper wire with too large capacity may cause a malfunction of unit or fire.
- Be sure to install N-Line. Without N-Line, it could cause damage to the unit.

9-2. WIRING OF MAIN POWER SUPPLY AND EQUIPMENT CAPACITY

9-2-1. Wiring diagram for main power supply

■ Schematic Drawing of Wiring

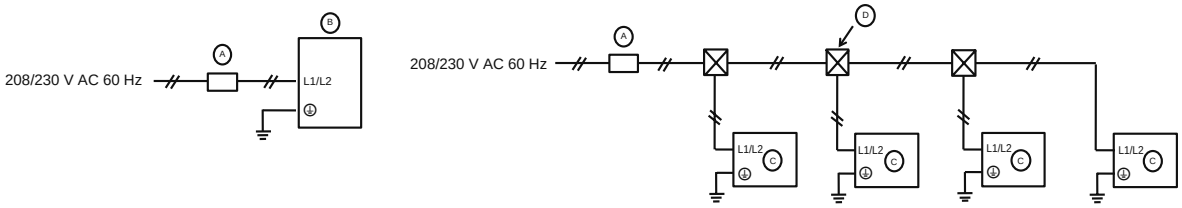

Note: The M-NET control indoor unit cannot receive power supplied from an outdoor unit, so provide it with power separately.

Ⓐ Switch (Breakers for Wiring and Current Leakage(If you use))
Ⓑ Outdoor Unit
Ⓒ M-NET Control Indoor unit
Ⓓ Pull Box

9-2-2. Cross section area of Wire for Main Power and ON/OFF capacities

PUMY-P36NKMU1 **PUMY-P48NKMU1**
PUMY-P36NKMU1-BS **PUMY-P48NKMU1-BS**

Thickness of Wire for Main Power Supply and On/Off Capacities

Model		Power Supply	Minimum Wire Thickness (AWG [mm²])		Breaker for Wiring*1	Breaker for Current Leakage(If you use)	Minimum circuit ampacity	Maximum rating of over current protector device
			Main Cable*2	Ground				
Outdoor Unit	P36/48	208/230 VAC, 60 Hz	AWG8 [8.4]	AWG8 [8.4]	40 A	40 A 30 mA 0.1 sec. or less	31 A	44 A
Indoor Unit		208/230 VAC, 60 Hz	Refer to installation manual of indoor unit.					

*1. Please follow applicable federal, state, or local codes to prevent potential leakage/electric shock.
Or install a ground fault interrupt for the prevention of leakage and electric shock.

IMPORTANT
If a current leakage breaker is used, it should be compatible with higher harmonics as this unit is equipped with an inverter. The use of an inadequate breaker can cause the incorrect operation of inverter.

*2. Use copper supply wires. Use the electric wires over the rating voltage 300 V.

Total operating current of the indoor unit	Minimum wire thickness (AWG [mm²])			Ground-fault interruper *1 (If you use)	Local switch (A)		Breaker for wiring (NFB)
	Main Cable	Branch	Ground		Capacity	Fuse	
F0 = 15 A or less *2	14/2.1	14/2.1	14/2.1	15 A current sensitivity *3	15	15	15
F0 = 20 A or less *2	12/3.3	12/3.3	12/3.3	20 A current sensitivity *3	20	20	20
F0 = 30 A or less *2	10/5.5	10/5.5	10/5.3	30 A current sensitivity *3	30	30	30

Apply to IEC61000-3-3 about max. permissive system impedance.

*1 The Ground-fault interrupter should support inverter circuit.
The Ground-fault interrupter should combine using of local switch or wiring breaker.

*2 Please take the larger of F1 or F2 as the value for F0.

F1 = Total operating maximum current of the indoor units × 1.2
F2 = {V1 × (Quantity of Type1)/C} + {V1 × (Quantity of Type2)/C} + {V1 × (Quantity of Type3)/C} + {V1 × (Quantity of Others)/C}

Indoor unit		V1	V2
Type 1	PKFY-P·NHMU, PKFY-P·NKMU, PEFY-P·NMSU, PLFY-P·NEMU, PLFY-EP·NEMU, PMFY-P·NBMU, PCFY-P·NKMU, PLFY-P·NFMU	19.8	2.4
Type 2	PEFY-P·NMAU, PVFY-P·NAMU	38.0	1.6
Type 3	PKFY-P·NBMU, PLFY-P·NCMU	3.5	2.4
Others	PFFY-P·NEMU, PFFY-P·NRMU, PEFY-P·NMHU	0.0	0.0

C : Multiple of tripping current at tripping time 0.01s

Please pick up “C” from the tripping characteristic of the breaker.

<Example of “F2” calculation>

* Condition PEFY-NMSU × 4 + PEFY-NMAU × 1, C = 8 (refer to right sample chart)

F2 = 19.8 × 4/8 + 38 × 1/8
= 14.65
→ 16 A breaker (Tripping current = 8 × 16 A at 0.01 s)

* 3 Current sensitivity is calculated using the following formula.

G1 = V2 × (Quantity of Type1) + V2 × (Quantity of Type2) + V2 × (Quantity of Type3) + V2 × (Quantity of Others)
+ V3 × (Wire length [km])

G1	Current sensitivity
30 or less	30 mA 0.1 sec or less
100 or less	100 mA 0.1 sec or less

Wire thickness (AWG [mm²])	V3
14/2.1	48
12/3.3	56
10/5.3	66

Sample chart

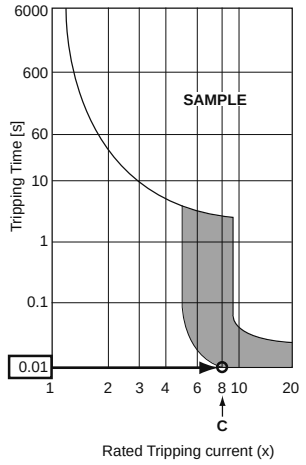

1. **Use a separate power supply for the outdoor unit and indoor unit.**
2. **Bear in mind ambient conditions (ambient temperature,direct sunlight, rain water,etc.) when proceeding with the wiring and connections.**
3. **The wire size is the minimum value for metal conduit wiring. The power cord size should be 1 rank thicker consideration of voltage drops. Make sure the power-supply voltage does not drop more than 10%.**
4. **Specific wiring requirements should adhere to the wiring regulations of the region.**
5. **Power supply cords of parts of appliances for outdoor use shall not be lighter than polychloroprene sheathed flexible cord (design 60245 IEC57). For example, use wiring such as YZW.**
6. **Install an earth longer than other cables.**

9-3. DESIGN FOR CONTROL WIRING

Please note that the types and numbers of control wires needed by the CITY MULTI-S series depend on the remote controllers and whether they are linked with the system or not.

9-3-1. Selection number of control wires

		M-NET remote controller
Use		Remote controller used in system control operations. • Group operation involving different refrigerant systems. • Linked operation with upper control system.
Remote controller → indoor unit		2-core wire (non-polar)
Transmission wires	Wires connecting → indoor units	
	Wires connecting → indoor units with outdoor unit	
	Wires connecting → outdoor units	

9-4. WIRING TRANSMISSION CABLES

9-4-1. Types of control cables

1. Wiring transmission cables
• Types of transmission cables: Shielding wire CVVS, CPEVS, or MVVS
• Cable diameter: More than 13.5 ft^2 [1.25 mm^2]
• Maximum wiring length: Within 656 ft [200 m]

2. M-NET Remote control cables

Kind of remote control cable	Shielding wire (2-core) CVVS, CPEVS, or MVVS
Cable diameter	AWG 20 to AWG 16 [0.5 to 1.25 mm^2]
Remarks	When 10 m is exceeded, use a cable with the same specifications as transmission line wiring.

3. MA Remote control cables

Kind of remote control cable	Sheathed 2-core cable (unshielded) CVV
Cable diameter	AWG 22 to AWG 16 [0.3 to 1.25 mm^2] AWG 18 to AWG 16 [0.75 to 1.25 mm^2]*
Remarks	Within 656 ft [200 m]

* Connected with simple remote controller.

9-4-2. Wiring examples

• Controller name, symbol and allowable number of controllers.

Name	Symbol	Allowable number of controllers	
Outdoor unit controller	OC	—	
Indoor unit controller	M-IC	PUMY-P36	1 to 7 units per 1 OC
		PUMY-P48	1 to 10 units per 1 OC
Remote controller	RC	M-NET RC	Maximum of 12 controllers for 1 OC
		MA-RC	Maximum of 2 per group

Note that the number of connectable units may be limited by some conditions such as an indoor unit's capacity or each unit's equivalent power consumption. (Refer to DATA BOOK.)

9-5. SYSTEM SWITCH SETTING

In order to identify the destinations of signals to the outdoor units, indoor units, and remote controller of the MULTI-S series, each microprocessor must be assigned an identification number (address). The addresses of outdoor units, indoor units, and remote controller must be set using their settings switches. Please consult the installation manual that comes with each unit for detailed information on setting procedures.

9-6. EXAMPLE EXTERNAL WIRING DIAGRAM FOR A BASIC SYSTEM

■ Example of system when using a M-NET controller

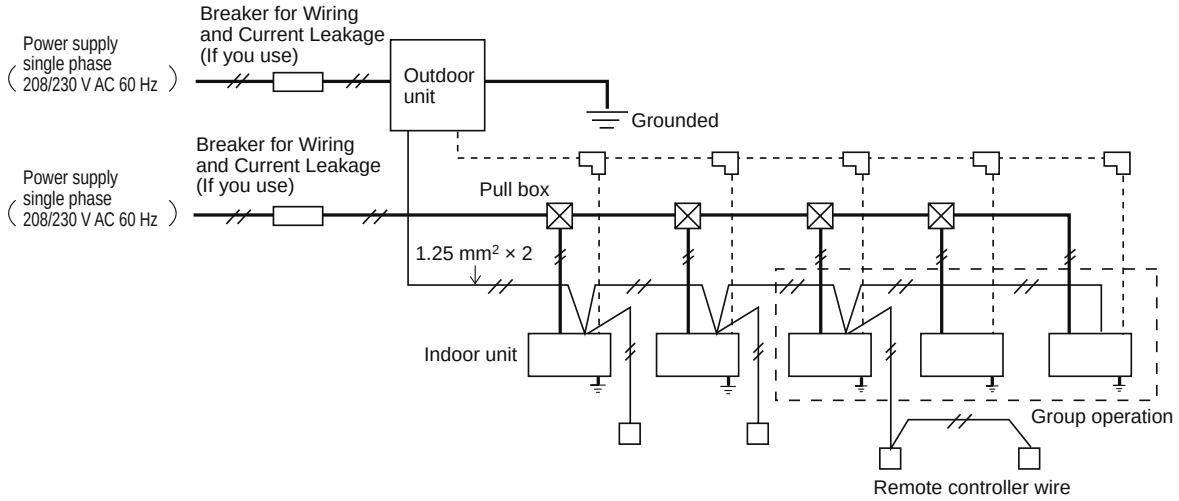

9-7. METHOD FOR OBTAINING ELECTRICAL CHARACTERISTICS WHEN A CAPACITY AGREEMENT IS TO BE SIGNED WITH AN ELECTRIC POWER COMPANY

The electrical characteristics of connected indoor unit system for air conditioning systems, including the MULTI-S series, depend on the arrangement of the indoor and outdoor units.
First read the data on the selected indoor and outdoor units and then use the following formulas to calculate the electrical characteristics before applying for a capacity agreement with the local electric power company.

9-7-1. Obtaining the electrical characteristics of a CITY MULTI-S series system

(1) Procedure for obtaining total power consumption

	Page numbers in this technical manual	Power consumption
Total power consumption of each indoor unit	See the technical manual of each indoor unit	①
Power consumption of outdoor unit*	Standard capacity diagram— Refer to 4-3.	②
Total power consumption of system	See the technical manual of each indoor unit	①+② <kW>

*The power consumption of the outdoor unit will vary depending on the total capacity of the selected indoor units.

(2) Method of obtaining total current

	Page numbers in this technical manual	Subtotal
Total current through each indoor unit	See the technical manual of each indoor unit	①
Current through outdoor unit*	Standard capacity diagram— Refer to 4-3.	②
Total current through system	See the technical manual of each indoor unit	①+② <A>

The current through the outdoor unit will vary depending on the total capacity of the selected indoor units.

(3) Method of obtaining system power factor

Use the following formula and the total power and current obtained in parts ① and ② on the above tables to calculate the system power factor.

$$\text{System power factor} = \frac{\text{(Total system power consumption)}}{\text{(Total system current} \times \text{voltage)}} \times 100\ \%$$

9-7-2. Applying to an electric power company for power and total current

Calculations should be performed separately for heating and cooling employing the same methods; use the largest resulting value in your application to the electric power company.

10-1. REFRIGERANT PIPING SYSTEM

Line-Branch Method
Connection Examples
(Connecting to 4 Indoor Units)

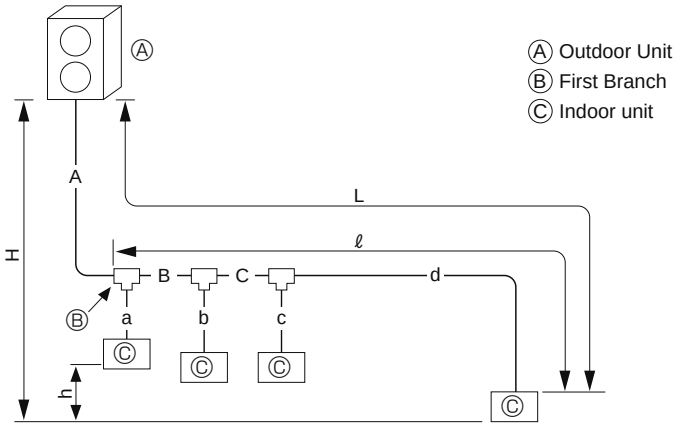

Permissible Length	Total Piping Length	A+B+C+a+b+c+d ≦ 984 ft [300 meters]
	Farthest Piping Length (L)	A+B+C+d ≦ 492 ft [150 meters] *
	Farthest Piping Length After First Branch (ℓ)	B+C+d ≦ 98 ft [30 meters]
Permissible High/Low Difference	High/Low Difference in Indoor/Outdoor Section (H)	164 ft [50meters] (If the outdoor unit is lower, 131 ft [40 meters])
	High/Low Difference in Indoor/Indoor Section (h)	49 ft [15 meters]

■ **Selecting the Refrigerant Branch Kit**

Use an optional branch piping kit (CMY-Y62-G-E).

■ **Select Each Section of Refrigerant Piping**

(1) Section From Outdoor Unit to First Branch (A)
(2) Sections From Branch to Indoor Unit (a,b,c,d)
(3) Section From Branch to Branch (B,C)
} Each Section of Piping

Select the size from the table to the right.

(1) Refrigerant Piping Diameter In Section From Outdoor Unit to First Branch (Outdoor Unit Piping Diameter)

Model	Piping Diameter (in [mm])	
PUMY-P36 PUMY-P48	Liquid Line	3/8 [ϕ9.52]
	Gas Line	5/8 [ϕ15.88]

(2) Refrigerant Piping Diameter In Section From Branch to Indoor Unit (Indoor Unit Piping Diameter)

Model number	Piping Diameter (in [mm])	
18 or lower	Liquid Line	1/4 [ϕ6.35]
	Gas Line	1/2 [ϕ12.7]
24 to 54	Liquid Line	3/8 [ϕ9.52]
	Gas Line	5/8 [ϕ15.88]

(3) Refrigerant Piping Diameter In Section From Branch to Branch

Liquid Line (inch [mm])	Gas Line (inch [mm])
3/8 [ϕ9.52]	5/8 [ϕ15.88]

■ **Additional refrigerant charge**

Refrigerant for the extended piping is not included in the outdoor unit when the unit is shipped from the factory. Therefore, charge each refrigerant piping system with additional refrigerant at the installation site. In addition, in order to carry out service, enter the size and length of each liquid pipe and additional refrigerant charge amounts in the spaces provided on the "Refrigerant amount" plate on the outdoor unit.

Calculation of additional refrigerant charge

- Calculate the additional charge using the liquid pipe size and length of the extended piping and total capacity of connected indoor units.
- Calculate the additional refrigerant charge using the procedure shown to the right, and charge with the additional refrigerant.
- For amounts less than 0.2 lb [0.1 kg], round up the calculated additional refrigerant charge.
  (For example, if the calculated charge is 13.2 lb [6.01 kg], round up the charge to 13.4 lb [6.1 kg].)

<Additional Charge>
Calculation of refrigerant charge

Pipe size Liquid pipe ø6.35	+	Pipe size Liquid pipe ø9.52	+	Total capacity of connected indoor units	Amount for the indoor units
[ft] × 0.21 [oz/ft] (m) × 19.0 (g/m)		[ft] × 0.55 [oz/ft] (m) × 50.0 (g/m)		– 27 kBTU/h	53 oz (1.5 kg)
				28 – 54 kBTU/h	88 oz (2.5 kg)
				55 – 62 kBUT/h	106 oz (3.0 kg)

Included refrigerant amount when shipped from the factory

Included refrigerant amount
10 LBS. 9 OZ. (4.8 kg)

<Example>
Outdoor model : P48
Indoor 1 : P24 (24 kBTU/h)
2 : P15 (15 kBTU/h)
3 : P08 (8 kBTU/h)
4 : P06 (6 kBTU/h)

A : ø9.52 66 ft [20 m]
B : ø9.52 16 ft [5 m]
C : ø9.52 16 ft [5 m]
a : ø9.52 49 ft [15 m]
b : ø6.35 33 ft [10 m]
c : ø6.35 33 ft [10 m]
d : ø6.35 66 ft [20 m]
} At the conditions below:

The total length of each liquid line is as follows:
[3/8"] ø9.52 : A + B + C + a = 20 + 5 + 5 + 15 = 147 ft [45 m]
[1/4"] ø6.35 : b + c + d = 10 + 10 + 20 = 132 ft [40 m]
The total capacity of connected indoor unit is as follows:
24 + 15 + 08 + 06 = 53
<Calculation example>
Additional refrigerant charge

$$132\text{ ft} \times 0.21\text{ oz} + 147\text{ ft} \times 0.55\text{ oz} + 88\text{ oz} = 197\text{ oz}\left[40\times\frac{19.0}{1000} + 45\times\frac{50.0}{1000} + 2.5 = 5.6\text{ kg (rounded up)}\right]$$

* The maximum pipe length between each indoor unit and an outdoor unit is 262 ft [80m] for the following indoor units:
PKFY-P06NBMU, PKFY-P08NHMU, PFFY-P06/08/12NEMU, and PFFY-P06/08/12NRMU
If using a pipe longer than 262 ft [80 m], an optional external LEV box (PAC-SG95-LE-E) is required.

Header-Branch Method
Connection Examples
(Connecting to 4 Indoor Units)

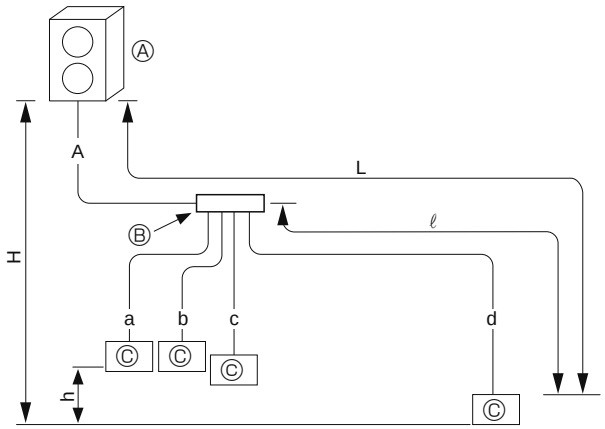

Permissible Length	Total Piping Length	A+a+b+c+d ≦ 984 ft [300 meters]
	Farthest Piping Length (L)	A+d ≦ 492 ft [150 meters] *
	Farthest Piping Length After First Branch (ℓ)	d is 98 ft [30 meters]
Permissible High/Low Difference	High/Low Difference in Indoor/Outdoor Section (H)	164 ft [50 meters] (If the outdoor unit is lower, 131 ft [40 meters])
	High/Low Difference in Indoor/Indoor Section (h)	49 ft [15 meters]

■ **Selecting the Refrigerant Branch Kit**

Please select branching kit, which is sold separately, from the table below.
(The kit comprises sets for use with liquid pipes and for use with gas pipes.)

Branch header (4 branches)	Branch header (8 branches)
CMY-Y64-G-E	CMY-Y68-G-E

■ **Select Each Section of Refrigerant Piping**

(1) Section From Outdoor Unit to First Branch (A)
(2) Sections From Branch to Indoor Unit (a,b,c,d)
} Each Section of Piping

Select the size from the table to the right.

(1) Refrigerant Piping Diameter In Section From Outdoor Unit to First Branch (Outdoor Unit Piping Diameter)

Model	Piping Diameter (in [mm])	
PUMY-P36 PUMY-P48	Liquid Line	3/8 [ϕ9.52]
	Gas Line	5/8 [ϕ15.88]

(2) Refrigerant Piping Diameter In Section From Branch to Indoor Unit (Indoor Unit Piping Diameter)

Model number	Piping Diameter (in [mm])	
18 or lower	Liquid Line	1/4 [ϕ6.35]
	Gas Line	1/2 [ϕ12.7]
24 to 54	Liquid Line	3/8 [ϕ9.52]
	Gas Line	5/8 [ϕ15.88]

(3) Refrigerant Piping Diameter In Section From Branch to Branch

Liquid Line (in [mm])	Gas Line (in [mm])
3/8 [ϕ9.52]	5/8 [ϕ15.88]

■ **Additional refrigerant charge**

Refrigerant for the extended piping is not included in the outdoor unit when the unit is shipped from the factory. Therefore, charge each refrigerant piping system with additional refrigerant at the installation site. In addition, in order to carry out service, enter the size and length of each liquid pipe and additional refrigerant charge amounts in the spaces provided on the "Refrigerant amount" plate on the outdoor unit.

Calculation of additional refrigerant charge

- Calculate the additional charge using the liquid pipe size and length of the extended piping and total capacity of connected indoor units.
- Calculate the additional refrigerant charge using the procedure shown to the right, and charge with the additional refrigerant.
- For amounts less than 0.2lb [0.1 kg], round up the calculated additional refrigerant charge.
  (For example, if the calculated charge is 13.2 lb [6.01 kg], round up the charge to 13.4 lb [6.1 kg].)

<Additional Charge>
Calculation of refrigerant charge

Pipe size Liquid pipe ø6.35	+	Pipe size Liquid pipe ø9.52	+
[ft] × 0.21 [oz/ft] (m) × 19.0 (g/m)		[ft] × 0.55 [oz/ft] (m) × 50.0 (g/m)	

Total capacity of connected indoor units	Amount for the indoor units
– 27 kBTU/h	53 oz (1.5 kg)
28 – 54 kBTU/h	88 oz (2.5 kg)
55 – 62 kBUT/h	106 oz (3.0 kg)

Included refrigerant amount when shipped from the factory

Included refrigerant amount
10 LBS. 9 OZ. (4.8 kg)

<Example>
Outdoor model : P48
Indoor 1 : P24 (24 kBTU/h)
2 : P15 (15 kBTU/h)
3 : P08 (8 kBTU/h)
4 : P06 (6 kBTU/h)

A : ø9.52 66 ft [20 m]
B : ø9.52 16 ft [5 m]
C : ø9.52 16 ft [5 m]
a : ø9.52 49 ft [15 m]
b : ø6.35 33 ft [10 m]
c : ø6.35 33 ft [10 m]
d : ø6.35 66 ft [20 m]
} At the conditions below:

The total length of each liquid line is as follows:
[3/8"] ø9.52 : A + B + C + a = 20 + 5 + 5 + 15 = 147 ft [45 m]
[1/4"] ø6.35 : b + c + d = 10 + 10 + 20 = 132 ft [40 m]
The total capacity of connected indoor unit is as follows:
24 + 15 + 08 + 06 = 53
<Calculation example>
Additional refrigerant charge

$$132\text{ ft} \times 0.21\text{ oz} + 147\text{ ft} \times 0.55\text{ oz} + 88\text{ oz} = 197\text{ oz}\left[40\times\frac{19.0}{1000} + 45\times\frac{50.0}{1000} + 2.5 = 5.6\text{ kg (rounded up)}\right]$$

* The maximum pipe length between each indoor unit and an outdoor unit is 262 ft [80m] for the following indoor units:
PKFY-P06NBMU, PKFY-P08NHMU, PFFY-P06/08/12NEMU, and PFFY-P06/08/12NRMU
If using a pipe longer than 262 ft [80 m], an optional external LEV box (PAC-SG95-LE-E) is required.

Method of Combined Branching of Lines and Headers
Connection Examples
(Connecting to 5 Indoor Units)

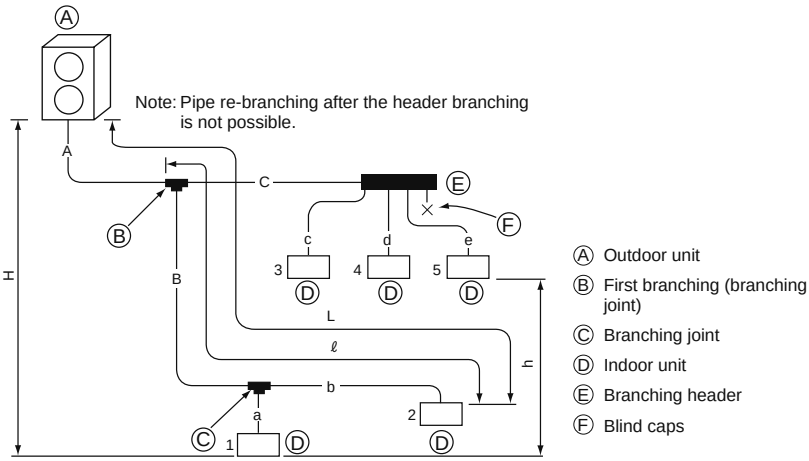

Permissible Length	Total Piping Length	A+B+C+a+b+c+d+e is 984 ft [300 meters]
	Farthest Piping Length (L)	A+B+b is 492 ft [150 meters] *
	Farthest Piping Length After First Branch (ℓ)	B+b is 98 tf [30 meters]
Permissible High/Low Difference	High/Low Difference in Indoor/Outdoor Section (H)	164 ft [50 meters] (If the outdoor unit is lower, 131 ft [40 meters])
	High/Low Difference in Indoor/Indoor Section (h)	49 ft [15 meters]

■ **Selecting the Refrigerant Branch Kit**

Please select branching kit, which is sold separately, from the table below.
(The kit comprises sets for use with liquid pipes and for use with gas pipes.)

Branch Joint	Branch Header (4 branches)	Branch Header (8 branches)
CMY-Y62-G-E	CMY-Y64-G-E	CMY-Y68-G-E

■ **Select Each Section of Refrigerant Piping**

(1) Section From Outdoor Unit to First Branch (A)
(2) Sections From Branch to Indoor Unit (a,b,c,d,e)
(3) Section From Branch to Branch (B,C)
} Each Section of Piping

Select the size from the table to the right.

(1) Refrigerant Piping Diameter In Section From Outdoor Unit to First Branch (Outdoor Unit Piping Diameter)

Model	Piping Diameter(inch [mm])	
PUMY-P36 PUMY-P48	Liquid Line	3/8 [ϕ9.52]
	Gas Line	5/8 [ϕ15.88]

(2) Refrigerant Piping Diameter In Section From Branch to Indoor Unit (Indoor Unit Piping Diameter)

Model number	Piping Diameter(inch [mm])	
18 or lower	Liquid Line	1/4 [ϕ6.35]
	Gas Line	1/2 [ϕ12.7]
24 to 54	Liquid Line	3/8 [ϕ9.52]
	Gas Line	5/8 [ϕ15.88]

(3) Refrigerant Piping Diameter In Section From Branch to Branch

Liquid Line (inch [mm])	Gas Line (inch [mm])
3/8 [ϕ9.52]	5/8 [ϕ15.88]

■ **Additional refrigerant charge**

Refrigerant for the extended piping is not included in the outdoor unit when the unit is shipped from the factory. Therefore, charge each refrigerant piping system with additional refrigerant at the installation site. In addition, in order to carry out service, enter the size and length of each liquid pipe and additional refrigerant charge amounts in the spaces provided on the "Refrigerant amount" plate on the outdoor unit.

Calculation of additional refrigerant charge

- Calculate the additional charge using the liquid pipe size and length of the extended piping and total capacity of connected indoor units.
- Calculate the additional refrigerant charge using the procedure shown to the right, and charge with the additional refrigerant.
- For amounts less than 0.2 lb [0.1 kg], round up the calculated additional refrigerant charge.
  (For example, if the calculated charge is 13.2 lb [6.01 kg], round up the charge to 13.4 lb [6.1 kg].)

<Additional Charge>
Calculation of refrigerant charge

Pipe size Liquid pipe ø6.35	+	Pipe size Liquid pipe ø9.52	+
[ft] × 0.21 [oz/ft] (m) × 19.0 (g/m)		[ft] × 0.55 [oz/ft] (m) × 50.0 (g/m)	

Total capacity of connected indoor units	Amount for the indoor units
– 27 kBTU/h	53 oz (1.5 kg)
28 – 54 kBTU/h	88 oz (2.5 kg)
55 – 62 kBUT/h	106 oz (3.0 kg)

Included refrigerant amount when shipped from the factory

Included refrigerant amount
10 LBS. 9 OZ. (4.8 kg)

<Example>
Outdoor model : P48
Indoor 1 : P24 (24 kBTU/h)
2 : P15 (15 kBTU/h)
3 : P08 (8 kBTU/h)
4 : P06 (6 kBTU/h)

A : ø9.52 66 ft [20 m]
B : ø9.52 16 ft [5 m]
C : ø9.52 16 ft [5 m]
a : ø9.52 49 ft [15 m]
b : ø6.35 33 ft [10 m]
c : ø6.35 33 ft [10 m]
d : ø6.35 66 ft [20 m]
} At the conditions below:

The total length of each liquid line is as follows:
[3/8"] ø9.52 : A + B + C + a = 20 + 5 + 5 + 15 = 147 ft [45 m]
[1/4"] ø6.35 : b + c + d = 10 + 10 + 20 = 132 ft [40 m]
The total capacity of connected indoor unit is as follows:
24 + 15 + 08 + 06 = 53
<Calculation example>
Additional refrigerant charge

$$132\text{ ft} \times 0.21\text{ oz} + 147\text{ ft} \times 0.55\text{ oz} + 88\text{ oz} = 197\text{ oz}\left[40\times\frac{19.0}{1000} + 45\times\frac{50.0}{1000} + 2.5 = 5.6\text{ kg (rounded up)}\right]$$

* The maximum pipe length between each indoor unit and an outdoor unit is 262 ft [80m] for the following indoor units:
PKFY-P06NBMU, PKFY-P08NHMU, PFFY-P06/08/12NEMU, and PFFY-P06/08/12NRMU
If using a pipe longer than 262 ft [80 m], an optional external LEV box (PAC-SG95-LE-E) is required.

10-2. PRECAUTIONS AGAINST REFRIGERANT LEAKAGE

10-2-1. Introduction

R410A refrigerant of this air conditioner is non-toxic and non-flammable but leaking of large amount from an indoor unit into the room where the unit is installed may be deleterious. To prevent possible injury, the rooms should be large enough to keep the R410A concentration specified by ISO 5149-1 as follows.

Maximum concentration
Maximum refrigerant concentration of R410A of a room is 0.44kg/m³ accordance with ISO 5149-1.
To facilitate calculation, the maximum concentration is expressed in units of kg/m³ [lbs/ft³] (kg [lbs] of R410A per m³ [ft³])

Maximum concentration of R410A: 0.027 lbs/ft³ [0.44 kg/m³]

(ISO 5149-1)

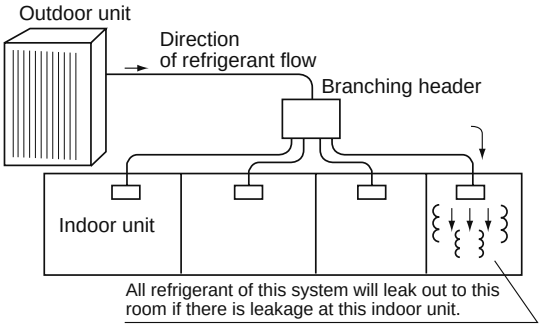

10-2-2. Confirming procedure of R410A concentration

Follow (1) to (3) to confirm the R410A concentration and take appropriate treatment, if necessary.

(1) Calculate total refrigerant amount by each refrigerant system. Total refrigerant amount is pre-charged refrigerant at ex-factory plus additional charged amount at field installation.

Note:
When single refrigeration system consists of several independent refrigeration circuit, figure out the total refrigerant amount by each independent refrigerant circuit.

(2) Calculate room volumes (m³) and find the room with the smallest volume

The part with ▭ represents the room with the smallest volume.

(a) Situation in which there are no partitions

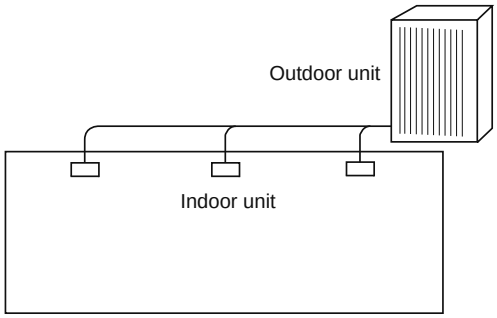

(b) There are partitions, but there are openings that allow the effective mixing of air.

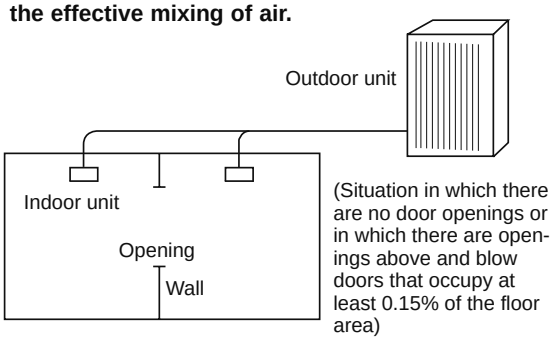

(c) If the smallest room has mechanical ventilation apparatus that is linked to a household gas detection and alarm device, the calculations should be performed for the second smallest room.

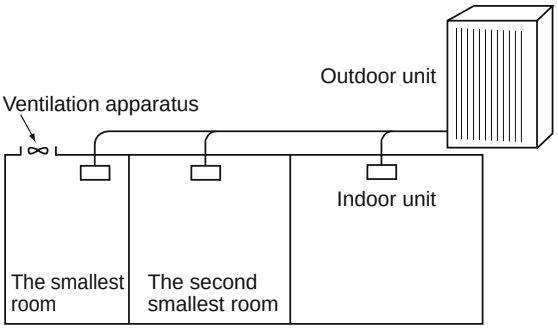

(3) Use the results of calculations (1) and (2) to calculate the refrigerant concentration:

$$\frac{\text{Total refrigerant in the refrigerating unit (lbs [kg])}}{\text{The smallest room in which an indoor unit has been installed (ft}^3\text{ [m}^3\text{])}} \leqq \text{Maximum concentration(lbs/ft}^3\text{ [kg/m}^3\text{])}$$

Maximum concentration of R410A:0.027 lbs/ft³ [0.44kg/m³]

If the calculation results do not exceed the maximum concentration, perform the same calculations for the larger second and third room, etc., until it has been determined that nowhere the maximum concentration will be exceeded.

11 DISASSEMBLY PROCEDURE

PUMY-P36NKMU1 **PUMY-P48NKMU1**
PUMY-P36NKMU1-BS **PUMY-P48NKMU1-BS** Note: Turn OFF the power supply before disassembly.

OPERATING PROCEDURE	PHOTOS/FIGURES
1. Removing the service panel and top panel (1) Remove 3 service panel fixing screws (5 × 12) and slide the hook on the right downward to remove the service panel. (2) Remove screws (3 for front, 3 for rear/5 × 12) of the top panel and remove it.	**Figure 1** 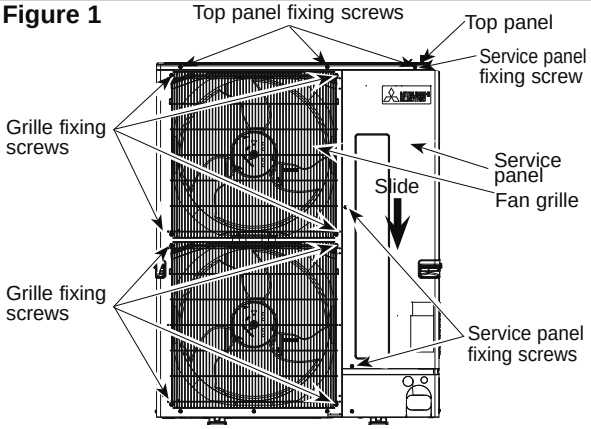
2. Removing the fan motor (MF1, MF2) (1) Remove the service panel. (See Figure 1) (2) Remove the top panel. (See Figure 1) (3) Remove 4 fan grille fixing screws (5 × 12) to detach the fan grille. (See Figure 1) (4) Remove a nut (for right handed screw of M6) to detach the propeller. (See Photo 1.) (5) Disconnect the connectors, CNF1 and CNF2 on multi controller circuit board in electrical parts box. (6) Remove 4 fan motor fixing screws (5 × 20) to detach the fan motor. (See Photo 2) Note: Tighten the propeller fan with a torque of 5.7 ± 0.3 N·m [4.2 ± 0.2 ft = lbs]	**Photo 1** **Photo 2** 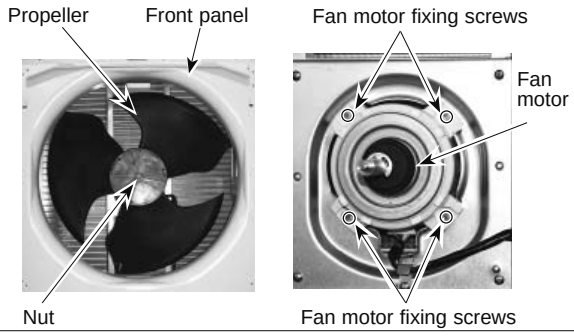
3. Removing the electrical parts box (1) Remove the service panel. (See Figure 1) (2) Remove the top panel. (See Figure 1) (3) Disconnect the connecting wire from terminal block. (4) Remove all the following connectors from multi controller circuit board; <Diagram symbol in the connector housing> • Fan motor (CNF1, CNF2) • Thermistor <Hic pipe> (TH2) • Thermistor <Outdoor liquid pipe> (TH3) • Thermistor <Compressor> (TH4) • Thermistor <Suction pipe/Ambient, Outdoor> (TH7/6) • High pressure switch (63H) • High pressure sensor (63HS) • Low pressure sensor (63LS) • 4-way valve (21S4) • Bypass valve (SV1) • Electronic expansion valve (LEV-A, LEV-B) Pull out the disconnected wire from the electrical parts box. (5) Remove the terminal cover and disconnect the compressor lead wire from the comp. terminal. (See Figure 2.) **Note: The terminal cover can be easily removed by using a blade of flathead screwdriver.** **Figure 2** 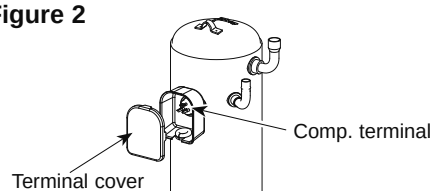 	**Photo 3** 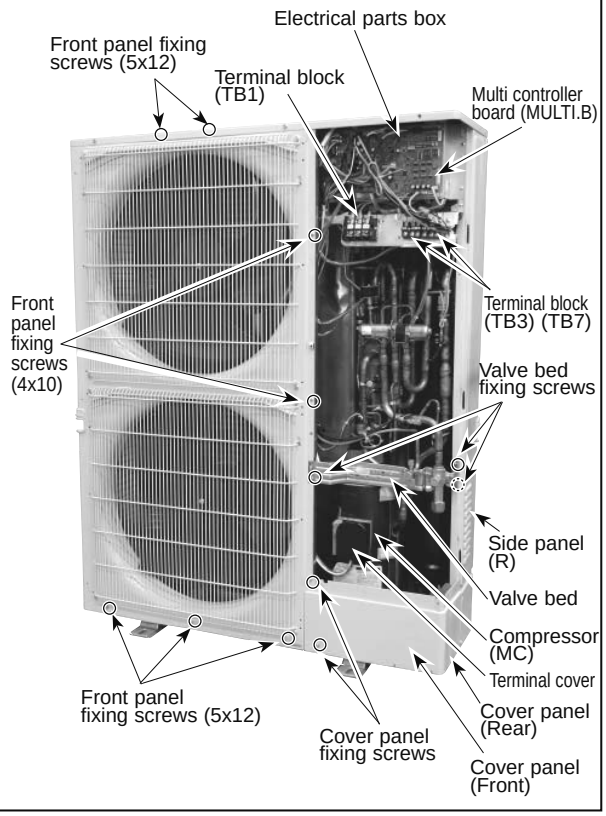

Continue to the next page

From the previous page.

OPERATING PROCEDURE	PHOTOS/FIGURES
(6) Remove 2 electrical parts box fixing screws (4 × 10) and detach the electrical parts box by pulling it upward. The electrical parts box is fixed with 2 hooks on the left and 1 hook on the right.	**Photo 4** 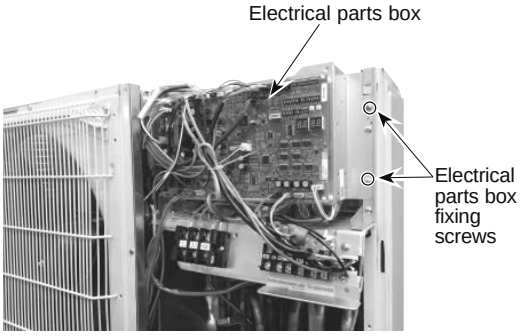
4. Removing the thermistor <Suction pipe> (TH6) (1) Remove the service panel. (See Figure 1) (2) Remove the top panel. (See Figure 1) (3) Disconnect the connector, TH7/6 (red), on the Multi controller circuit board in the electrical parts box. (4) Loosen the wire clamps on top of the electrical parts box. (5) Pull out the thermistor <Suction pipe> (TH6) from the sensor holder. **Note: When replacing thermistor <Suction pipe> (TH6), replace it together with thermistor <Ambient> (TH7) since they are combined together.** **Refer to procedure No.5 below to remove thermistor <Ambient> (TH7).**	**Photo 5** 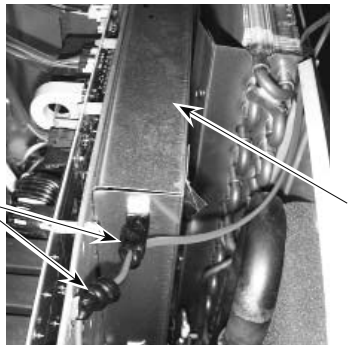 **Photo 6** 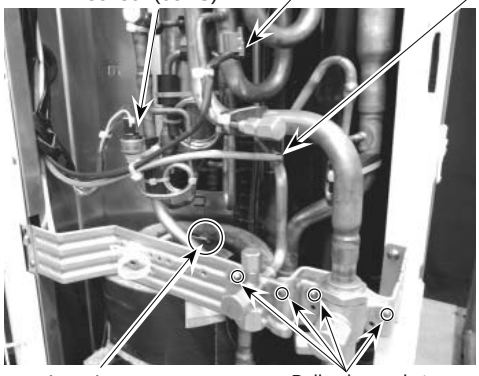
5. Removing the thermistor <Ambient> (TH7) (1) Remove the service panel. (See Figure 1) (2) Remove the top panel. (See Figure 1) (3) Disconnect the connector TH7/6 (red) on the multi controller circuit board in the electrical parts box. (4) Loosen the wire clamps on top of the electrical parts box. (See Photo 5.) (5) Pull out the thermistor <Ambient> (TH7) from the sensor holder. **Note: When replacing thermistor <Ambient> (TH7), replace it together with thermistor <Suction pipe> (TH6), since they are combined together.** **Refer to procedure No.4 above to remove thermistor <Suction pipe> (TH6).**	**Photo 7** 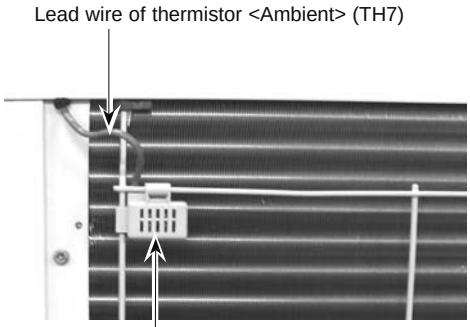

OPERATING PROCEDURE	PHOTOS/FIGURES
6. Removing the thermistor <Outdoor liquid pipe> (TH3) and thermistor <Compressor> (TH4), thermistor <Hic pipe> (TH2) (1) Remove the service panel. (See Figure 1) (2) Disconnect the connectors, TH3 (white) and TH4 (white), TH2 (black) on the multi controller circuit board in the electrical parts box. (3) Loosen the clamp for the lead wire in the rear of the electrical parts box. (4) Pull out the thermistor <Outdoor liquid pipe> (TH3) and thermistor <Compressor> (TH4) from the sensor holder. (See Photo 6 and 8)	**Photo 8** 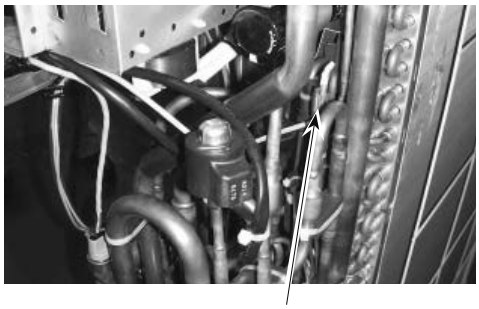 Thermistor <Outdoor liquid pipe> (TH3)
7. Removing the 4-way valve coil (21S4) (1) Remove the service panel. (See Figure 1) **[Removing the 4-way valve coil]** (2) Remove 4-way valve coil fixing screw (M5 × 7). (3) Remove the 4-way valve coil by sliding the coil toward you. (4) Disconnect the connector 21S4 (green) on the multi controller circuit board in the electrical parts box.	**Photo 9** 4-way valve coil (21S4) 4-way valve 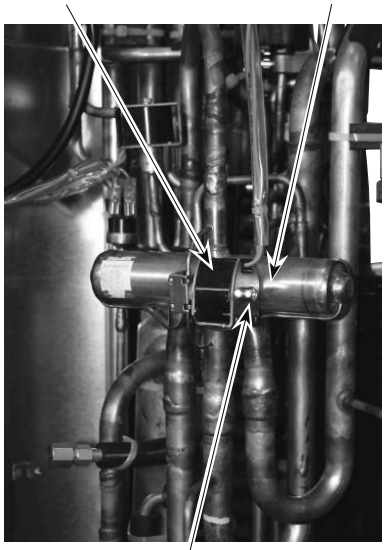 4-way valve coil fixing screw
8. Removing the 4-way valve (1) Remove the service panel. (See Figure 1) (2) Remove the top panel. (See Figure 1) (3) Remove the electrical parts box. (See Photo 4) (4) Remove 3 valve bed fixing screws (4 × 10) and 4 ball valve and stop valve fixing screws (5 × 16) and then remove the valve bed. (See Photo 3 and 6) (5) Remove 2 cover panel fixing screws (5 x 12), then slide the cover panel (front) upward to remove it. (The cover panel (front) is fixed to the cover panel (rear) with a hook on the rear side. (See Photo 3) (6) Remove the cover panel (rear) fixing screws (2 for right side and 2 for rear/ 5 x 12), then slide the cover panel (rear) upward to remove it. (See Photo 3) (The cover panel (rear) is fixed to the side panel (R) with 2 screws.) (7) Remove 3 side panel (R) fixing screws (5 × 12) in the rear of the unit, then slide the side panel (R) upward to remove it. (The side panel (R) is fixed to the side plate with hooks on the rear side.) (8) Remove the 4-way valve coil. (See Photo 9) (9) Recover refrigerant. (10) Remove the welded part of 4-way valve. **Note 1: Recover refrigerant without spreading it in the air.** **Note 2: The welded part can be removed easily by removing the side panel (R).** **Note 3: When installing the four-way valve, cover it with a wet cloth to prevent it from heating (120°C or more),** **then braze the pipes so that the inside of pipes are not oxidized.**	

OPERATING PROCEDURE	PHOTOS/FIGURES

9. Removing bypass valve coil (SV1) and bypass valve

(1) Remove the service panel. (See Figure 1)
(2) Remove the top panel. (See Figure 1)
(3) Remove the cover panel (front). (Refer to procedure 8 (5))
(4) Remove the cover panel (rear). (Refer to procedure 8 (6))
(5) Remove the side panel (R). (Refer to procedure 8 (7))
(6) Remove the bypass valve coil fixing screw (M4 × 6).
(7) Remove the bypass valve coil by sliding the coil upward.
(8) Disconnect the connector SV1 (gray) on the multi controller circuit board in the electrical parts box.
(9) Remove the electrical parts box. (See Photo 4)
(10) Recover refrigerant.
(11) Remove the welded part of bypass valve.

Refer to the notes below.

10. Removing the high pressure switch (63H) and high pressure sensor (63HS)

(1) Remove the service panel. (See Figure 1)
(2) Remove the top panel. (See Figure 1)
(3) Remove the cover panel (front). (Refer to procedure 8 (5))
(4) Remove the cover panel (rear). (Refer to procedure 8 (6))
(5) Remove the side panel (R). (Refer to procedure 8 (7))
(6) Pull out the lead wire of high pressure switch and high pressure sensor.
(7) Remove the electrical parts box. (See Photo 4)
(8) Recover refrigerant.
(9) Remove the welded part of high pressure switch and high pressure sensor.

Refer to the notes below.

11. Removing the low pressure sensor (63LS)

(1) Remove the service panel. (See Figure 1)
(2) Remove the top panel. (See Figure 1)
(3) Remove the cover panel (front). (Refer to procedure 8 (5))
(4) Remove the cover panel (rear). (Refer to procedure 8 (6))
(5) Remove the side panel (R). (Refer to procedure 8 (7))
(6) Disconnect the connector 63LS (blue) on the multi controller circuit board in the electrical parts box.
(7) Remove the electrical parts box. (See Photo 4)
(8) Recover refrigerant.
(9) Remove the welded part of low pressure sensor.

Refer to the notes below.

12. Removing electrical expansion valve (LEV-A, LEV-B)

(1) Remove the service panel. (See Figure 1)
(2) Remove the top panel. (See Figure 1)
(3) Remove the cover panel (front). (Refer to procedure 8 (5))
(4) Remove the cover panel (rear). (Refer to procedure 8 (6))
(5) Remove the side panel (R). (Refer to procedure 8 (7))
(6) Remove the electrical expansion valve coil. (See Photo 10,11)
(7) Remove the electrical parts box. (See Photo 4)
(8) Recover refrigerant.
(9) Remove the welded part of electrical expansion valve.

Refer to the notes on the right.

Photo 10

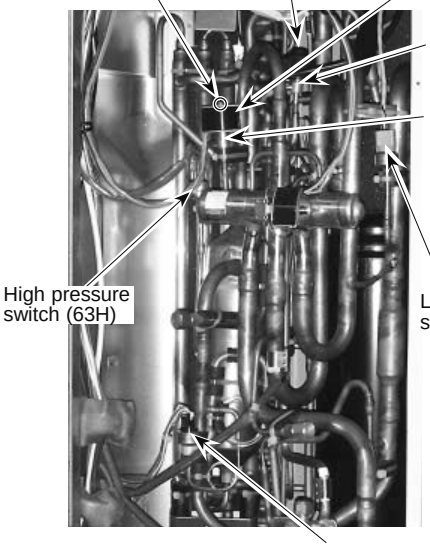

Photo 11

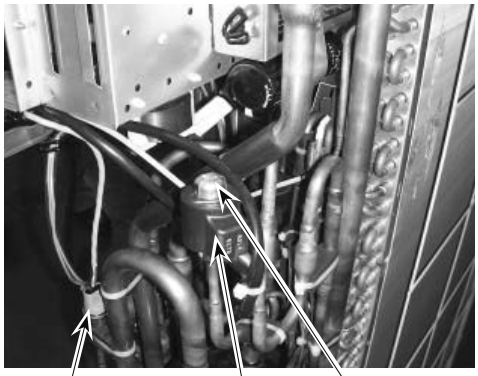

Low pressure sensor (63LS)
Electronic expansion valve coil (LEV-A)
Electronic expansion valve

Notes:

1. Recover refrigerant without spreading it in the air.
2. The welded part can be removed easily by removing the side panel (R).
3. When installing the following parts, cover it with a wet cloth to prevent it from heating as the temperature below, then braze the pipes so that the inside of pipes are not oxidized;
- **Bypass valve (procedure 9), 248°F [120°C] or more**
- **High pressure switch and high pressure sensor (procedure 10), 212°F [100°C] or more**
- **Low pressure sensor (procedure 11), 212°F [100°C] or more**
- **LEV (procedure 12), 248°F [120°C] or more**

OPERATING PROCEDURE	PHOTOS /FIGURES

13. Removing the compressor (MC)

(1) Remove the service panel. (See Figure 1)
(2) Remove the top panel. (See Figure 1)
(3) Remove 2 front cover panel fixing screws (5 × 12) and remove the front cover panel. (See Photo 3)
(4) Remove front panel fixing screws, 5 (5x12) and 2 (4 x 10) and remove the front panel. (See Photo 3)
(5) Remove 4 back cover panel fixing screws (5 × 12) and remove the back cover panel.
(6) Remove the electrical parts box. (See Photo 4)
(7) Remove the valve bed. (Refer to procedure 8 (4))
(8) Remove the cover panel (front). (Refer to procedure 8 (5))
(9) Remove the cover panel (rear). (Refer to procedure 8 (6))
(10) Remove the right side panel. (Refer to procedure 8 (7))
(11) Remove 3 separator fixing screws (4 × 10) and remove the separator. (See Figure 3)
(12) Recover refrigerant.
(13) Remove the 3 compressor fixing nuts for motor using spanner or adjustable wrench.
(14) Remove the welded pipe of motor for compressor inlet and outlet and then remove the compressor.

Note: Recover refrigerant without spreading it in the air.

Photo 13

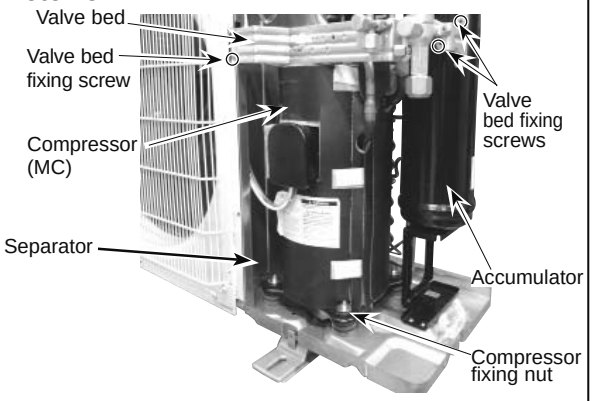

Figure 3

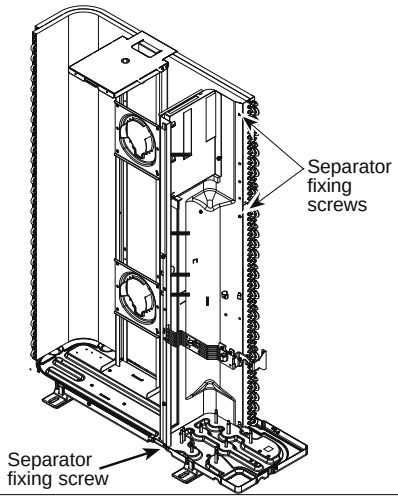

14. Removing the accumulator

Note: Recover refrigerant without spreading it in the air.

(1) Remove the service panel. (See Figure 1)
(2) Remove the top panel. (See Figure 1)
(3) Remove the front cover panel. (Refer to procedure 13 (3))
(4) Remove the back cover panel. (Refer to procedure 13 (5))
(5) Remove the electrical parts box. (See Photo 4)
(6) Remove the valve bed. (Refer to procedure 8 (4))
(7) Remove the cover panel (front). (Refer to procedure 8 (5))
(8) Remove the cover panel (rear). (Refer to procedure 8 (6))
(9) Remove the side panel (R). (Refer to procedure 8 (7))
(10) Recover refrigerant.
(11) Remove 2 welded pipes of accumulator inlet and outlet.
(12) Remove 2 accumulator leg fixing screws (4 × 10). (See Photo 15)

Photo 14

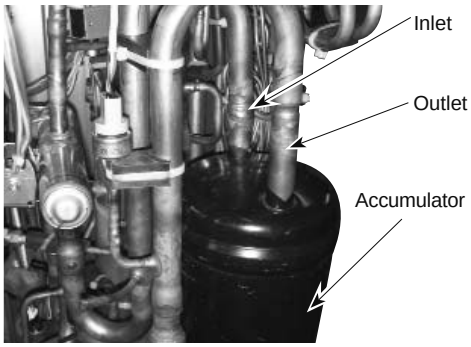

Photo 15

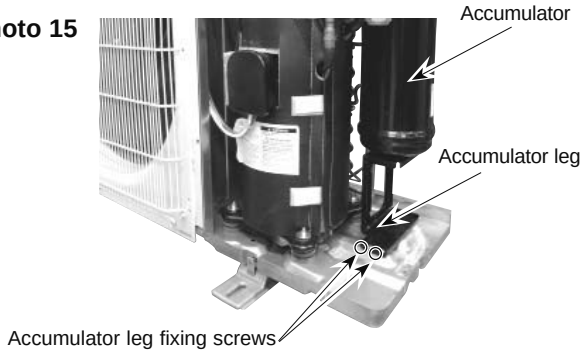

OPERATING PROCEDURE	PHOTOS/FIGURES
15. Removing the reactor (DCL) (1) Remove the service panel. (See Figure 1) (2) Remove the top panel. (See Figure 1) (3) Remove the electrical parts box (See photo 4) (4) Remove 4 screws for reactor (4 x 10) to remove the reactor. (See Figure 4)	**Figure 4** 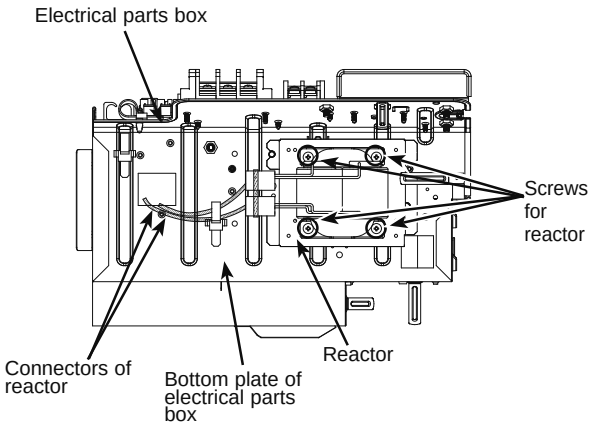

CITY MULTI

MITSUBISHI ELECTRIC CORPORATION

HEAD OFFICE : TOKYO BUILDING, 2-7-3, MARUNOUCHI, CHIYODA-KU, TOKYO100-8310, JAPAN

©Copyright 2016 MITSUBISHI ELECTRIC CORPORATION
Issued: Feb. 2018 No.OCH612 REVISED EDITION-B
Issued: Mar. 2017 No.OCH612 REVISED EDITION-A
Published: May 2016 No.OCH612
Made in Japan

Specifications are subject to change without notice.