atmosphere is everything

Document No: LP2-IOM
Date: 2/28/24

LOW PROFILE VARIABLE SPEED (LPV2) AND LOW PROFILE ETL SANITATION CERTIFIED (LPN2) COMMERCIAL SERIES

Installation, Operation and Maintenance Manual

Please read these instructions carefully before assembling, installing, operating, or maintaining the product. Follow all safety guidelines to avoid injury or damage. Keep these instructions for future reference.

Warning: To reduce the risk of fire, electric shock, or injury to persons, do not use replacement parts that have not been recommended by the manufacturer.

OVERVIEW

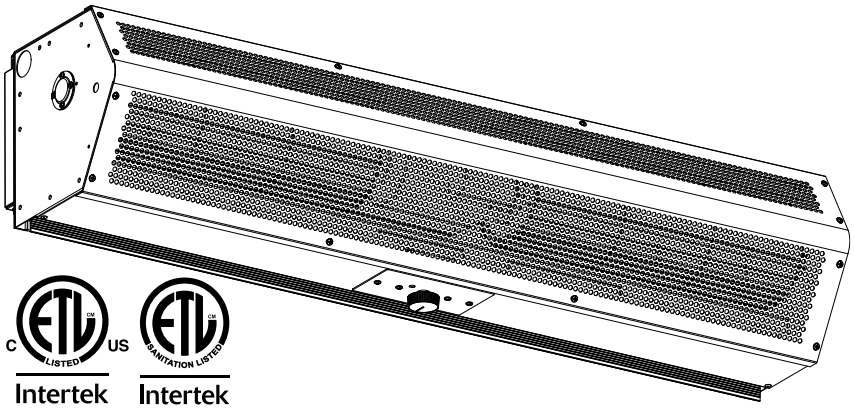

Mars Air Curtains are designed to cover door openings, providing both temperature control/environmental separation and flying insect control when the building's doors are opened. Typical installation heights are up to 7' for flying insect control for both LPN2 (ETL Sanitation for customer entrances) and LPV2 (Variable Speed) models, up to 8' for environmental separation (LPV2 models only), and up to 4' from the countertop for LPN225 (ETL Sanitation for countertop/service windows) models. All ETL Sanitation certified Models should be mounted at the Flying Insect Control heights referenced above. The units are typically installed horizontally above the door opening and can either be mounted to the wall or suspended from the ceiling. All models are ETL Listed to Canada and US standards; unheated models are approved for inside and outside installation, while heated units must be installed on the inside (protected) side of the opening. The motors used in all LoPro models are 1/6HP.

WARNING

When servicing the product, motor may be hot enough to cause pain or injury. Allow motor to cool before servicing.

All LoPro Models come standard with a stamped air intake screen(s) and can be configured with an aluminum mesh filter(s) as an option – 25" wide LPN2 models (LPN225) come standard with aluminum mesh air intake filter(s) in conjunction with the punched air intake screen(s).

GENERAL SAFETY INFORMATION

Use this product only in the manner intended by the manufacturer. If you have any questions, contact the manufacturer. Only qualified personnel should install this product. Installing personnel should have a clear understanding of these instructions and should be aware of general safety precautions. Improper installation can result in electric shock, possible injury due to coming in contact with moving parts, as well as other potential hazards.

WARNING

To reduce the risk of fire, electric shock, or injury to persons, observe the following.

A. Always disconnect, lock and tag power source before installing or servicing product.
B. Installation work or electrical wiring must be done by qualified person(s) in accordance with all applicable codes and standards, including fire-rated construction.
C. The combustion airflow needed for safe operation of fuel burning equipment in the area may be affected by the product's operation. Follow the heating equipment manufacturer's guideline and safety standards, such as those published by the National Fire Protection Agency (NFPA), the American Society of Heating, Refrigeration and Air Conditioning Engineers (ASHRAE) and local code authorities.
D. When cutting or drilling into a wall or ceiling, be careful not to damage electrical wiring and other hidden utilities.

WARNING

Precaution should be taken in explosive atmospheres.

RECEIVING AND INSPECTION

Upon receiving the product, check to ensure all items (including accessories, e.g. switches) are accounted for by referencing the Bill of Lading to ensure all items were received. Inspect each carton for shipping damage before accepting delivery. Notify the freight carrier if any damage is noticed. The carrier will make notification on the delivery receipt acknowledging any damage to the product. All damage should be noted on all copies of the Bill of Lading which is countersigned by the delivering carrier. A Carrier Inspection Report should be filled out by the carrier upon arrival and a report given to the Traffic Department. If damaged upon arrival, file a claim immediately with the carrier. Any physical damage to the unit after acceptance is not the responsibility of Mars Air Systems.

UNPACKING

Verify that all parts, components and accessories, and the correct quantities of each have been received. If any items are missing, report shortages to Mars Air Systems directly to arrange for obtaining the missing items. Again, verify quantities received against those on the Bill of Lading only, as multiple shipments may be involved.

INSTALLATION

Typical Mounting – Wall or Ceiling Mounted Horizontally Above the Door Opening

1. Remove the air intake grille(s) and/or air intake filter(s) from the product and set aside. Gently remove all packaging materials, hardware, and all other accessories from interior of unit prior to operating. Severe unit damage will occur if these items are not removed prior to operation.
2. Lay unit on its top face (with directional vanes pointing up) and remove the two (2) Tek screws from the wall mounting plate, just behind the discharge nozzle, and remove the mounting plate by sliding up (FIG. 1). The mounting plate may be stuck in place: if necessary, lay the unit onto its bottom face (taking care not to damage the variable speed dial) and strike the top of the plate with a rubber mallet to dislodge it (FIG. 2).

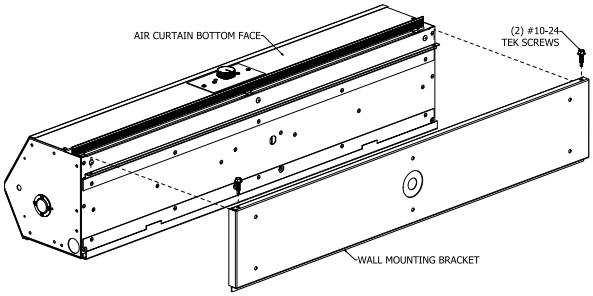

FIG. 1

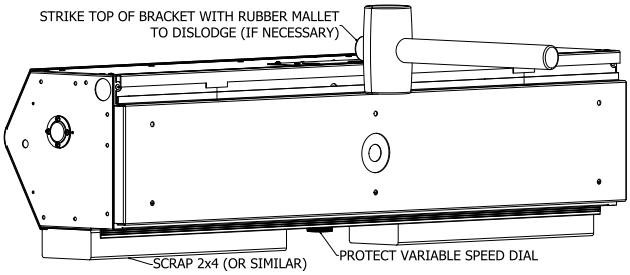

FIG. 2

3. Measure the mounting plate and center it over the opening. The air curtain shall be equal to or greater than the width of the opening.
4. Install the mounting plate(s) above the opening. Multiple pre-punched 7/16” mounting holes are provided for your convenience to secure the product to the wall. All hardware is field provided by others.
5. Align the tabs on the rear of the unit with the slots provided on the wall mounting plate (FIG. 3). The bottom flange on the unit must also drop in the bottom channel of the wall mounting plate. Replace the Tek Screws to secure the unit in place.

Note: If the holes provided on the bottom of the unit and the bottom of the wall mounting plate do not align, remove the unit and re-install. The holes on the bottom channel of the wall mounted plate must be on the bottom.

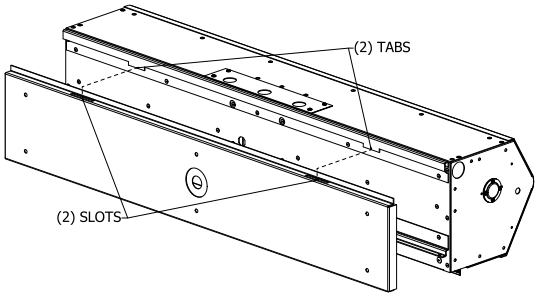

FIG. 3

6. Mount the product such that the discharge is 1” above the opening and all obstacles (FIG. 4).

   Note: If the product is installed higher than the recommended 1” above the opening, then it must be moved 3/8” away from the wall for every 1” that it is moved up. Any void between the wall and the product must be sealed (by others) to optimize performance.

7. Use six (6) bolts for wall installation, or alternatively, use four (4) threaded rods for overhead installation (FIG. 4). All hardware is field provided by others.

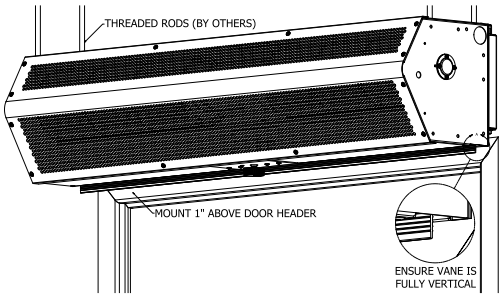

FIG. 4

8. Optional Adjustable Mounting Brackets, Side Extension Plates, and Extended Wall Mounted Brackets are available for installations over a Vertical Lift or Drum Roll-up type door. (Reference **Accessory Installation Supplement**)
9. If applicable, for tandem installation or products mounted side by side, allow no more than 6" between the two products. For overhead installation using threaded rods, the products may require a beam, by others, to span the full distance of the mounting length. (Reference **Accessory Installation Supplement**)
10. All wires must be connected internal of the unit and some knockouts are provided. However, it may be necessary to create your own knockout, as required.
11. The unit must be wired per NEC and local codes.

Electrical Field Wiring

The air curtain is provided with an internal junction box, accessible from the top face of the unit, for all internal connections (FIG. 5). The unit and any optional accessories must be wired with the proper voltage to the junction box per the wiring diagram (FIG. 6).

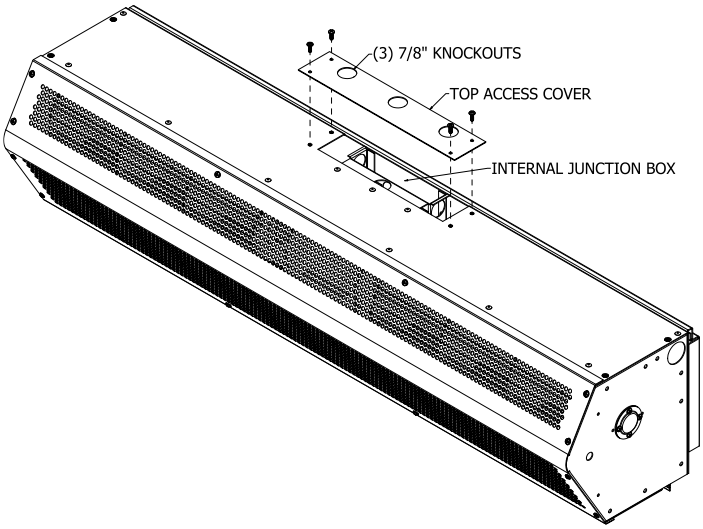

FIG. 5

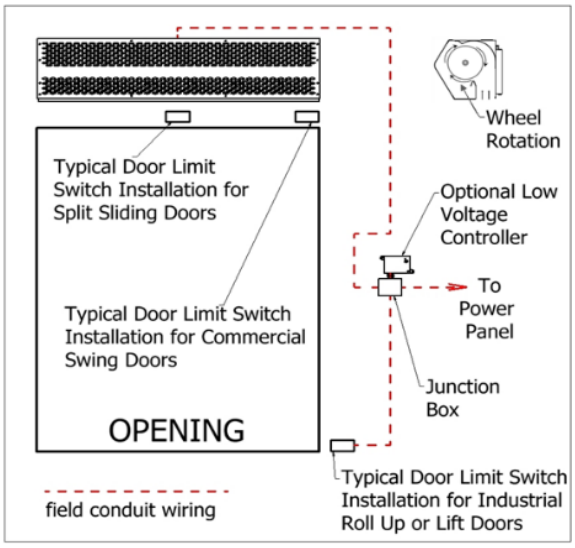

FIG. 6 (Unheated products only)

NOTE

For accessory installation, reference Accessory Installation Supplement.

For heated products, reference Heated Products Supplement.

START-UP

This product has been assembled and tested at the factory prior to shipping. The following procedures should be performed to assure its performance. Before continuing with the start-up, it is important to recognize the safety controls furnished with the unit.

WARNING

Prevent hazard of electrical shock. More than one disconnect switch may be required to de-energize this product.

WARNING

The following items must all be completed by a qualified installer and checked off when completed

A. Re-check that the product has been installed properly and is level and secure.
B. Check all terminal screws are tight and field wiring is connected in accordance to National Electrical Code and wired per the enclosed wiring diagram. For electric heated models, ensure that the coils are secured and not touching each other on any metal surface.
C. Verify proper voltage prior to powering the product. (See product label for reference).
D. Check all field wired components "if supplied" are wired correctly.
E. Check that the inlet air supply and the discharge air supply are free of obstructions.
F. Check that all air filter(s) and/or air intake grille(s) are in place and installed properly, as originally shipped.
G. Verify voltage to the product once more and turn power on.
H. Regardless of whether the product is mounted on the inside or outside of the door opening, set the air directional vanes in the discharge nozzle slightly outward to approximately 10-15° towards the outside, or the wind load (FIG. 7).

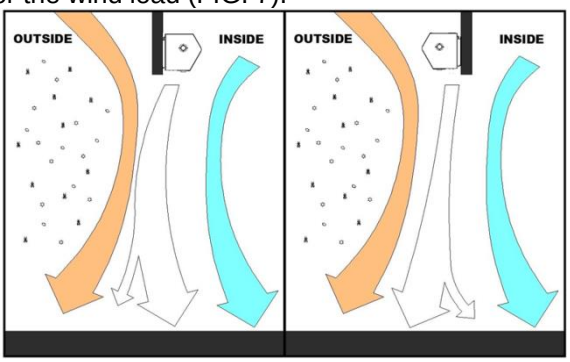

FIG. 7

I. For products with control panels, turn the HOA (Hand-On-Auto) selector switch to “On” position and open the door to energize the product. For products without a control panel or an On/Off switch, open the door to energize the product.
J. If heated products are installed, reference **Heated Products Supplement**.
K. For three phase units, verify direction of rotation of blower wheels (note direction arrows on the blower wheel housing). Correct if needed by changing polarity of three phase power.
L. **VERY IMPORTANT** Using a clamp meter, measure the amperage to each motor and ensure that they do not exceed the amperage listed on the product label.
M. If applicable, adjust the air intake grille(s) such that the output air stream reaches the floor. For temperature control and environmental separation applications, the air stream should reach the floor with sufficient strength to create an air seal around the door opening without creating turbulent mixing of the inside and outside air. For flying insect control applications, the air stream should reach the floor with maximum strength. If after proper installation and adjustment, the product appears to be producing too little or too much air for the application, contact the manufacturer.

MAINTENANCE

WARNING

To reduce the risk of fire, electrical shock, or injury to persons, observe the following:

A. Maintenance is to be performed only by qualified personnel who are familiar with local codes and regulations and are experienced with this type of product.
B. Before servicing or cleaning the product switch power off at service panel and lock service panel to prevent power from being switched “ON” accidentally.

Routine maintenance is required to keep this product operating at its peak performance and efficiency. Over time, the housing, air intake grille, air intake filter, blower wheels and motor(s) will accumulate a buildup of dust, debris and other residue. It is imperative to keep these components clean. Failure to do so will not only lower operational efficiency and performance, but also reduce the useful life of the product. The time between cleanings depends on the application, location, and daily hours of use. On average, under normal usage conditions, the product should require a thorough cleaning once every six (6) months.

To clean the product, perform the following:

1. Verify the product has been disconnected from the power source.
2. Use a damp cloth and either a warm mild soapy water solution or bio-degradable degreaser, to wipe down the exterior components of the housing.
3. To access the interior of the product, remove the air intake grille(s) and/or air intake filter(s). This is accomplished by removing the screws on the face of the air intake grille(s)/filter(s).
4. Thoroughly clean the air intake grille(s)/filter(s).
5. Thoroughly wipe down the motor, blower wheels and blower wheel housings. Be careful not to spray the motor with a water hose.
6. The motor(s) require no additional lubrication. They are permanently lubricated and feature double sealed ball bearings.
7. To re-install the product, reverse the procedures above.
8. Reconnect the power source to the product.
9. If you have any questions regarding the maintenance of the product, contact the manufacturer.

SPECIAL APPLICATIONS

Outdoor Installation

For units being installed outdoors, special consideration may be required for enclosure, motor, wheel, and other components to minimize damage caused by exposure to the outdoor elements. Contact factory for special construction and costing.

Freezer and Cooler Installation

Air curtain must be mounted on the warm side for optimal performance. LPV2 series with variable speed switch is strongly recommended to control the air curtain air flow velocity at the floor level.

Freezer applications in high humidity areas may require a de-humidifier, or an additional defrost cycle, to minimize condensation and icing. We recommend the air curtain unit not to replace physical doors, but to work in conjunction with the door opening sequence cycle. Contact factory for details.

CAUTION

The appliance is not to be used by persons (including children) with reduced physical, sensory, or mental capabilities, or lack of experience and knowledge, unless they have been given supervision or instruction. Children are not to play with the appliance.

DISCLAIMER

Mars reserves the right to change specifications and product design without notice. Such revisions do not entitle the buyer to corresponding changes, improvements, additions, or replacements for previously purchased equipment.

TROUBLESHOOTING

PROBLEM	CAUSE	SOLUTION
NO AIR BLOWING OUT OF DISCHARGE NOZZLE	- No power being supplied to the unit from the electrical power source - Circuit breaker is tripped - Blown fuses on power supply - Motor overload is open or tripped - Motor contactor / relay defective (if applicable) - Failed switch	- Confirm power source / check if in on position - Reset circuit breaker - Replace fuses - Allow the motor to cool down; motor has auto reset internal overload; if unit is panel equipped, press reset button on overload inside panel, or replace motor overload if overload remains tripped - Check voltage to coil; check contacts to see if they are pulling in - Replace or repair limit switch
MOTOR IS RUNNING BUT FANS ARE NOT SPINNING	- Loose or broken coupling (belt drive) - Loose set screws on wheel hubs - Fan spinning inside fan housing - Broken fan hub	- Replace or tighten coupling - Tighten set screws on motor shaft flats - Tighten fan on shaft or replace fan - Replace fan wheels
ELECTRICAL CONTROLS NOT WORKING WHEN DOOR IS OPEN	- Switch is in off position - Door limit switch is not operating	- Turn unit's switch to the on position - Repair or replace door limit switch
UNIT WILL NOT TURN OFF	- Door limit switch is permanently closed or energized	- Position the door switch in a manner that turns off the unit when the door closes and turns on the unit when the door opens. Only light pressure required.
LOW AIR FLOW	- Discharge air vanes out of adjustment - Obstruction on intake or discharge - Power leads out of polarity - Blower motor rotating below normal speed - Fan rubbing against housing - Blower wheels clogged with dirt	- Adjust vanes to proper position (Refer to Start-Up Section in this manual) - Remove obstruction or move air curtain - Switch power leads to correct polarity (3 phase models only) - Apply proper voltage per unit requirement (see unit label) / Adjust adjustable motor speed knob (if applicable) - Free fan from housing - Clean and remove dirt from blower wheels
EXCESSIVE AIR VELOCITY AT DOOR OPENING	- Nozzle out of adjustment and not angled far out enough (BD only) - Air temperature too cold - Air stream pushing air outside of the building	- Adjust nozzle angle to outside - Add auxiliary heat to overcome wind chill - Adjust discharge angle back into building
AIR NOT HITTING THE FLOOR	- Low air velocity - Obstruction in the direction of air flow - Negative building pressure	- Adjust vanes to proper position or check installation height (Refer to Start-Up Section in this manual) - Remove obstruction or move air curtain (Move out 3/8" for every 1" up from the door) - Provide a make-up air system to relieve negative building pressure
UNEVEN AIR	- Shaft rotating inside fan - One motor not functioning	- Replace fan or tighten fan on shaft - Replace or repair motor
EXCESSIVE NOISE AND OR VIBRATION	- Loose or broken coupling (belt drive) - Loose set screws on wheel hubs - Fan spinning inside fan housing - Broken fan hub - Bearing end caps worn - Damaged blower wheel - Bearing end caps worn - Pillow block bearings make noise - Balancing clips missing	- Replace or tighten coupling - Tighten set screws on motor shaft flats - Tighten fan on shaft or replace fan - Replace fan wheels - Replace Bearing end caps - Replace Blower Wheel - Replace Bearing end caps - Grease Bearing - Replace Blower Wheel

TROUBLESHOOTING MOTOR

To determine if the motor is in good operating condition, compare measured motor resistance at the motor terminals to the values shown below.

MARS MOTOR RESISTANCE READINGS

Single Phase Motors

Applicable Air Curtain Series	Mars Part #	Manufacturer Part #	Brand	Motor Rating	HP	Voltage	Phase	Capacitor Rating	Motor Frame	MOTOR WIRES OR TERMINAL (T) OHM READINGS: HIGH SPEED (1750)	MEDIUM SPEED (1650)	LOW SPEED (1450)
										Black Motor Wire & White Motor Wire	-	-
LPV2, LPN2	03-001	7190-1682	Fasco	Nema 1	1/6	115	1	5 µF 370Vac	-	11.5	-	-
	03-002	7190-1903	Fasco	Nema 1	1/6	115	1	5 µF 370Vac	-	8.4	-	-
	03-003	7190-1825	Fasco	Nema 1	1/6	230	1	4 µF 440Vac	-	64	-	-
	03-004	7190-1904	Fasco	Nema 1	1/6	230	1	6 µF 370Vac	-	44.6	-	-
	03-124	7190-3307	Fasco	Nema 1	1/6	115/230	1	10 µF 370Vac	-	8.2/36	-	-
	03-124	K33NVDHJ-1446	US	Nema 1	1/6	115/230	1	10 µF 370Vac	-	8.1/32	-	-
Applicable Air Curtain Series	**Mars Part #**	**Manufacturer Part #**	**Brand**	**Motor Rating**	**HP**	**Voltage**	**Phase**	**Capacitor Rating**	**Motor Frame**	**White Motor Wire (T1) & Black Motor Wire (T3)**	**White Motor Wire (T1) & Black Motor Wire (T5)**	**White Motor Wire (T1) & Black Motor Wire (T2)**
STD2, N2, PH10, QP10	03-010	34G928X169	Baldor	Washdown (IP54)	1/2	115	1	-	56Z	1.2	-	-
	03-010	34G928X169	Baldor	Washdown (IP54)	1/2	208/230	1	-	56Z	4.6	-	-
	03-005	7124-1175	Genteq	Nema 1	1/2	115	1	7.5 µF 370Vac	48	2.6	3.8	5.2
	03-006	7124-1560	Genteq	Nema 1	1/2	208/230	1	10 µF 370Vac	48	9.9	15.9	22.5
	03-007	48S17T439	Marathon	Nema 1	1/2	277	1	-	48Z	7.7	-	-
	03-005	K055PWM1736C13H	Nidec	Nema 1	1/2	115	1	10 µF 370Vac	48Y	2.1	3.7	5.2
	03-005	K055PWM1736C13H	US	Nema 1	1/2	115	1	10 µF 370Vac	48Y	5.3	3.7	5.4
	03-006	K55HXPNA-2845	US	Nema 1	1/2	208/230	1	10 µF 370Vac	48Y	8.7	18.2	24.2
Applicable Air Curtain Series	**Mars Part #**	**Manufacturer Part #**	**Brand**	**Motor Rating**	**HP**	**Voltage**	**Phase**	**Capacitor Rating**	**Motor Frame**	**White Motor Wire (T1) & Black Motor Wire (T2)**	**White Motor Wire (T1) & Black Motor Wire (T3)**	**-**
HV2, NH2, PH12	03-021	35T276R025G1	Baldor	Washdown (IP54)	1	115	1	-	56Z	0.7	-	-
	03-015-Baldor	35M316S174	Baldor	Nema 1	1	115	1	-	56Z	0.6	-	-
	03-015-Baldor	35M316S174	Baldor	Nema 1	1	208/230	1	-	56Z	2.2	-	-
	03-021	35T276R025G1	Baldor	Washdown (IP54)	1	208/230	1	-	56Z	2.8	-	-
	03-014	7124-0985	Genteq	Nema 1	1	115	1	50 µF 370Vac	56	1.6	2.4	-
	03-015	7124-1096	Genteq	Nema 1	1	208/230	1	30 µF 370Vac	56	6.5	9.2	-
	03-015	-	Nidec	Nema 1	1	208/230	1	20 µF 370Vac	48Y	4.3	6.5	-
	03-014	K55BWJZB-2362	US	Nema 1	1	115	1	20 µF 370Vac	48Y	1	2.1	-
	03-015	-	US	Nema 1	1	208/230	1	20 µF 370Vac	48Y	3.2	6.3	-

Three Phase Motors

Applicable Air Curtain Series	Mars Part #	Manufacturer Part #	Brand	Motor Rating	HP	Voltage	Phase	Motor Frame	LEAD WIRE OHM READINGS: Black Motor Wire (L1) & Red Motor Wire (L2)	Black Motor Wire (L1) & White Motor Wire (L3)	Red Motor Wire (L2) & White Motor Wire (L3)
STD2, N2, PH10, QP10	03-008	P55YYDHB-1527	US	Nema 1	1/2	208-230	3	48	16.1	16.1	16.1
	03-008	P55YYDHB-1527	US	Nema 1	1/2	460	3	48	63.6	63.6	63.6
	03-009	48T17T135	Marathon	Nema 1	1/2	575	3	48	136	136	136
HV2, NH2, PH12	03-017	56T17T5541	Marathon	Nema 1	1	208-230	3	56Z	4.3	4.3	4.3
	03-017	56T17T5541	Marathon	Nema 1	1	460	3	56Z	16.5	16.5	16.5
	03-018	56T17T5544	Marathon	Nema 1	1	575	3	56Z	26.6	26.6	26.6
	03-022	35N127S902	Baldor	Washdown (IP54)	1	208-230	3	56Z	5.1	5.1	5.1
	03-022	35N127S902	Baldor	Washdown (IP54)	1	460	3	56Z	19.8	19.8	19.8
EP2	03-026	165716	Century	Nema 1	3	208-230	3	U56Y	1.5	1.5	1.5
	03-026	165716	Century	Nema 1	3	460	3	U56Y	5.7	5.7	5.7
	03-026	P63TYFMJ-1687	US	Nema 1	3	208-230	3	56HZ	1.2	1.2	1.2
	03-026	P63TYFMJ-1687	US	Nema 1	3	460	3	56HZ	4.4	4.4	4.4
	03-028	35E92Y26	Baldor	Nema 1	3	575	3	56Z	9.2	9.2	9.2
WMI	03-110	36H110-2211G1	Baldor	Nema 1	1,2,3	208-230	3	184Z	3.5	3.5	3.5
	03-110	36H110-2211G1	Baldor	Nema 1	1,2,3	460	3	184Z	13.5	13.5	13.5
WMH	03-055	37F932W828G1	Baldor	Nema 1	5	230	3	215YZ	0.7	0.7	0.7
	03-055	37F932W828G1	Baldor	Nema 1	5	460	3	215YZ	2.4	2.4	2.4
	03-046	37F909X889G1	Baldor	Nema 1	7	230	3	215YZ	0.6	0.6	0.6
	03-046	37F909X889G1	Baldor	Nema 1	7	460	3	215YZ	1.6	1.6	1.6
BD	03-033	U639A - 215TTFC6027	Marathon	Nema 1	10	208-230	3	215T	0.4	0.4	0.4
	03-033	U639A - 215TTFC6027	Marathon	Nema 1	10	460	3	215T	1.2	1.2	1.2
	03-074	GT1128A 170118.60	Marathon	Nema 1	25	575	3	284TS	0.5	0.5	0.5

Double Cabinet Unit
(84" and above)

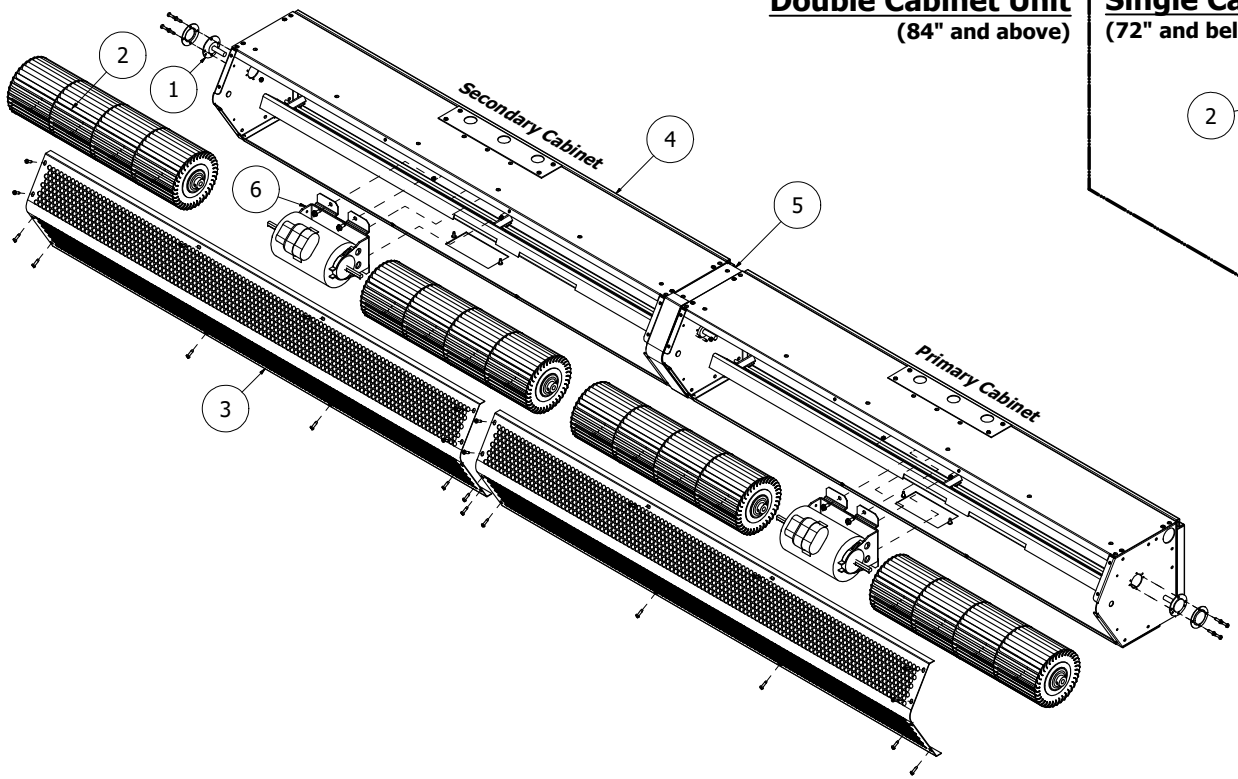

Single Cabinet Unit
(72" and below)

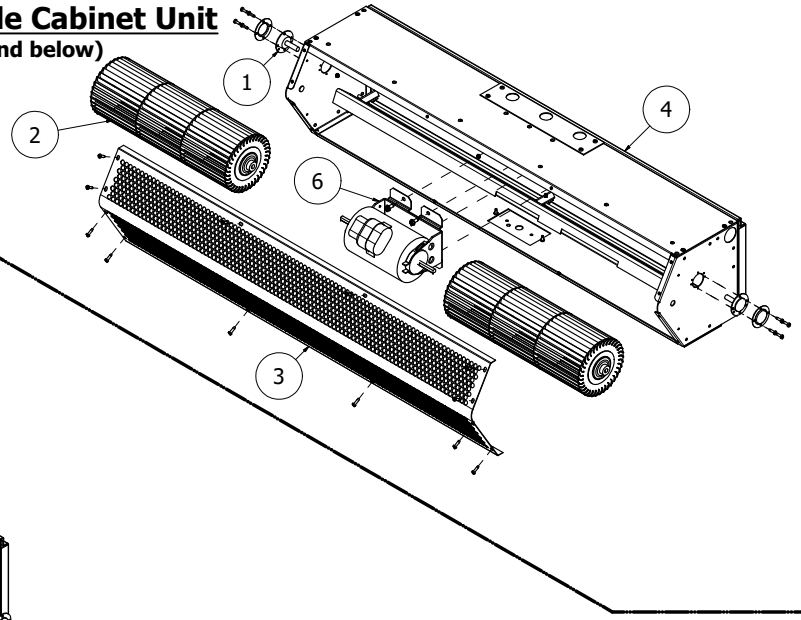

EXAMPLE

LPN2 72 - 1 U A - OB

- Series: LPN 2
- LENGTH OF UNIT
- # OF MOTORS
- U = UNHEATED
- VOLTAGE CODE
- COLOR

*Use corresponding letter for "Voltage Code" to complete the model numbers.

Air Curtain Model #	Item 1: Bearing, Set of 2		Item 2: Blower Wheel		Item 3: Intake Screen		Item 4: Air Curtain Housing		Item 5: Tandem Mounting Brkt.		Voltage (Voltage Code) 115V/1Ø (A) Item 6: Motor		Voltage (Voltage Code) 208-230V/1Ø (D) Item 6: Motor	
	Part #	Qty	Part #	Qty	Part #	Qty	Part #	Qty	Part #	Qty	Part #	Qty	Part #	Qty
LPV225-1U*-OB	98-313	1	04-052	2	02-031A-OB	1	14025OB	1	-	-	03-001W	1	03-003W	1
LPV236-1U*-OB	98-313	1	04-001A	2	02-025A-OB	1	14036OB	1	-	-	03-001W	1	03-003W	1
LPV242-1U*-OB	98-313	1	04-002A	2	02-026A-OB	1	14042OB	1	-	-	03-001W	1	03-003W	1
LPV248-1U*-OB	98-313	1	04-003A	2	02-027A-OB	1	14048OB	1	-	-	03-001W	1	03-003W	1
LPV260-1U*-OB	98-313	1	04-004A	2	02-028A-OB	1	14060OB	1	-	-	03-002W	1	03-004W	1
LPV272-1U*-OB	98-313	1	04-005A	2	02-029A-OB	1	14072OB	1	-	-	03-002W	1	03-004W	1
LPV284-2U*-OB	98-313	2	04-002A	4	02-026A-OB	2	14042OB	2	J0120	1	03-001W	2	03-003W	2
LPV296-2U*-OB	98-313	2	04-003A	4	02-027A-OB	2	14048OB	2	J0120	1	03-001W	2	03-003W	2
LPV2108-2U*-OB	98-313	2	04-003A 04-004A	2 2	02-027A-OB 02-028A-OB	1 1	14048OB 14060OB	1 1	J0120	1	03-001W 03-002W	1 1	03-003W 03-004W	1 1
LPV2120-2U*-OB	98-313	2	04-004A	4	02-028A-OB	2	14060OB	2	J0120	1	03-002W	2	03-004W	2
LPV2144-2U*-OB	98-313	2	04-005A	4	02-029A-OB	2	14072OB	2	J0120	1	03-002W	2	03-004W	2

DRAWN AR	12/3/2024	mars
CHECKED		TITLE Replacement Parts, LPN2 Series, Unheated
QA		
MFG		
APPROVED		
MATERIAL		SIZE D · DWG NO LPN2 Unhtd Parts · REV
		SCALE 1/4.25 · SHEET 1 OF 1

WARRANTY

Mars' warranty coverage, period, extent, and limitations apply to the product only. It does not apply to labor. Mars warrants that the Mars product 1) is free from defects in materials and workmanship, and 2) conforms to Mars' published specifications. The warranty period for Mars products (except for heated models, custom models, or WMI, WMH and BD models) is a five (5) year period commencing on the date of shipment. The warranty for heated models is an eighteen (18) month period, the warranty for custom models and for accessories is a twelve (12) month period, and the warranty for WMI, WMH, and BD models is a twelve (12) month period. The date on the customer's invoice is the date of shipment unless Mars or your reseller informs you and Mars otherwise. Mars will provide free replacement of any part that fails as a result of a defect in material or manufacturer's workmanship. Changes in operational specification parameters that differ from those provided on the original purchase order are not covered. Mars products are inspected and tested before packaging and are shipped in working condition. The warranty for Mars products only covers free-of-charge replacement of failed parts. The warranty does not cover labor and transportation expenses that may be required to deliver and to install replacement parts. Because in many instances it is impossible to determine the cause of failure, the customer may be responsible for transportation charges associated with replacement of failed part. Mars does not warrant uninterrupted or error-free operation of Mars product. Under no circumstance is Mars liable for any of the following: 1) third-party claims against you for damages, 2) special, incidental, or indirect damages, or 3) any economic consequential damages (including lost profits and savings), regardless of whether Mars, its suppliers, or its resellers were informed of the possibility of damages. The warranty does not cover repair or exchange of Mars products resulting from misuse, accidental damage, modification, unsuitable physical or operating environment, improper maintenance or installation by customer, or failure caused by a product for which Mars is not responsible. The warranty does not cover damages caused by mishandling during transportation. The warranty is voided by removal or alteration of Mars product or parts identification labels, and by improper installation of product and resulting non-compliance with federal, state, and local codes and regulations. Additionally, Mars reserves the right to void the warranty for non-payment of invoice.

CONTACT FACTORY FOR COMPLETE PARTS LIST FOR ALL MODELS.

KEEP THIS MANUAL FOR YOUR RECORDS.

Model Number:_____

Serial Number: _____

Date Purchased: _____

Dealer Purchased From: _____

atmosphere is everything

14716 S. Broadway St., Gardena, CA 90248

(310) 532–1555 ● (800) 421-1266

Fax: (310) 324-3030

Please go to our website at www.marsair.com for a downloadable version of this document.