atmosphere is everything

Document No: IND2-IOM
Date: 08/14/20

STANDARD 2 (STD2), HIGH VELOCITY 2 (HV2), EXTRA POWER 2 (EP2) AND ETL SANITATION CERTIFIED INDUSTRIAL SERIES

Installation, Operation and Maintenance Manual

Read these instructions carefully before assembling, installing, operating, or maintaining the product. Follow all safety guidelines to avoid injury or damage. Keep these instructions for future reference.

Warning: To reduce the risk of fire, electric shock, or injury to persons, do not use replacement parts that have not been recommended by the manufacturer.

OVERVIEW

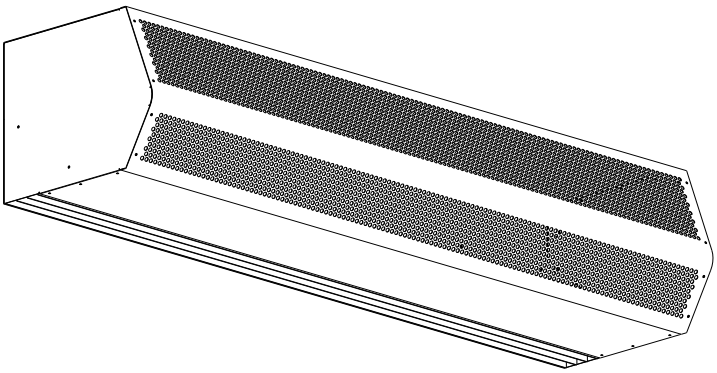

Mars Air Curtains are designed to cover door openings, providing both temperature control/environmental separation and flying insect control, when the building's doors are opened. Typical installation heights are: Standard 2 Series (Environmental Separation up to 12', Flying Insect Control up to 10'), High Velocity 2 Series (Environmental Separation up to 14', Flying Insect Control up to 12'), and Extra Power 2 Series (Environmental up to 16', Flying Insect Control up to 14'). All ETL Sanitation Certified Series should be mounted at 7' for Flying Insect Control. The units are typically wall mounted horizontally above the door opening. They can also be suspended from the ceiling or vertically mounted alongside the opening. The units are ETL Listed for either an inside or outside mount. Heated units must be mounted on the inside or the protected side of the opening. The motors used in the Standard 2, High Velocity 2 and Extra Power 2 Series are 1/2HP, 1HP and 3HP, respectively. The ETL Sanitation Series utilizes 1/2HP and 1HP motors.

The Standard 2, High Velocity 2 and Extra Power 2 Series come standard with an air intake grille. They can also be configured with an aluminum mesh air intake filter instead of the air intake grille or in conjunction with it.

WARNING

When servicing the product, motor may be hot enough to cause pain or injury. Allow motor to cool before servicing.

GENERAL SAFETY INFORMATION

Use this product only in the manner intended by the manufacturer. If you have any questions, contact the manufacturer. Only qualified personnel should install this product. Installing personnel should have a clear understanding of these instructions and should be aware of general safety precautions. Improper installation can result in electric shock, possible injury due to coming in contact with moving parts, as well as other potential hazards.

WARNING

To reduce the risk of fire, electric shock, or injury to persons, observe the following.

A. Always disconnect, lock and tag power source before installing or servicing product.
B. Installation work or electrical wiring must be done by qualified person(s) in accordance with all applicable codes and standards, including fire-rated construction.
C. The combustion airflow needed for safe operation of fuel burning equipment in the area may be affected by the product's operation. Follow the heating equipment manufacturer's guideline and safety standards, such as those published by the National Fire Protection Agency (NFPA), the American Society of Heating, Refrigeration and Air Conditioning Engineers (ASHRAE) and local code authorities.
D. When cutting or drilling into a wall or ceiling, be careful not to damage electrical wiring and other hidden utilities.

WARNING

Precaution should be taken in explosive atmospheres.

RECEIVING AND INSPECTION

Upon receiving the product, check to make sure all items are accounted for by referencing the Bill of Lading to ensure all items were received. Inspect each carton for shipping damage before accepting delivery. Notify the freight carrier if any damage is noticed. The carrier will make notification on the delivery receipt acknowledging any damage to the product. All damage should be noted on all copies of the Bill of Lading which is countersigned by the delivering carrier. A Carrier Inspection Report should be filled out by the carrier upon arrival and a report given to the Traffic Department. If damaged upon arrival, file a claim immediately with the carrier. Any physical damage to the unit after acceptance is not the responsibility of Mars Air Systems.

UNPACKING

Verify that all parts, components and accessories, and the correct quantities of each have been received. If any items are missing, report shortages to Mars Air Systems directly to arrange for obtaining the missing items. Again, verify quantities received against those on the Bill of Lading only, as multiple shipments may be involved.

INSTALLATION

Typical Mounting – Wall or Ceiling Mounted Horizontally Above the Door Opening

1. Remove the air intake grille(s) and/or filter(s) from the product and set aside. Only products 48” or less, except HV2 and EP2 models, are shipped with the motor fan assembly (MFA) mounted inside.
2. Measure the housing and center it over the opening. The air curtain shall be equal to or greater than the width of the opening.
3. Total of two (2) key-hole slots and six (6) pre-punched mounting holes are provided for your convenience. The 7/16” pre-punched holes (4) provided, (2) on each end for top/celling mounts. The 1/2” key-hole slot and 7/16” pre-punched hole (2) provided, (2) on each end for wall mounts. These holes must be utilized to secure the product to the wall or ceiling. If necessary, holes may be drilled inside the product to align with the stud spacing. All hardware is field provided by others.
4. Mount the product such that the discharge is 1” above the opening and all obstacles. (FIG. 1)
   Note: If the product is installed higher than the recommended 1” above the opening, then it must be moved 3/8” away from the wall for every 1” that it is moved up. Any void between the wall and the product must be sealed, by others, to optimize performance.
5. Use four (4) threaded rods for overhead installation or four (4) threaded bolts for wall installation. All hardware is field provided by others. (FIG. 1)
6. If applicable, optional Adjustable Mounting Brackets, Side Extension Plates and Extended Wall Mounted Brackets are also available for installations over a Vertical Lift or Drum Roll-up type door. (Reference **Accessory Installation Supplement**)
7. If applicable, for tandem installation or products mounted side by side, allow no more than 6” between the two products. For overhead installation using threaded rods, the products may require a beam, by others, to span the full distance of the mounting length. (Reference **Accessory Installation Supplement**)
8. All wires must be connected internal of the unit and some knockouts are provided. However, it may be necessary to create your own knockout, as required.
9. The unit must be wired per NEC and local codes.

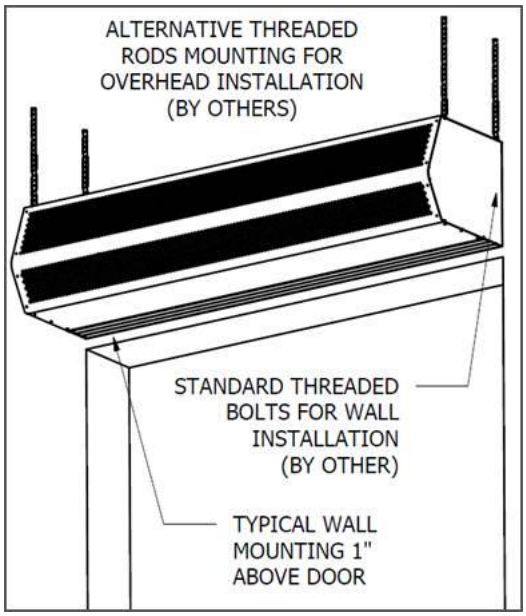

FIG. 1

Motor Fan Assembly Installation and Electrical Field Wiring

1. Once the housing is installed over the opening, the Motor Fan Assembly (MFA) must be re-placed and securely fastened. For products with the MFA shipped loose, wing nuts or hex nuts are provided inside the unit (FIG. 2). For heated MFA installation, reference **Heated Products Supplement Sheet**.
2. The unit and any optional accessories must be wired with the proper voltage to the junction box per the wiring diagram. (FIG. 3, unheated products only)
3. All 3 phase motors are bi-directional, which means they can rotate in either direction. Follow directional arrows on the blower wheel housings for proper rotation. If the motor is rotating incorrectly, switch two of the 3 phase

4. power or motor leads and the motor will rotate the opposite direction. Make sure all motors are turning in the same and proper direction. (FIG. 2)
5. Replace the air intake grille(s) or filter(s) once the product has been properly tested.

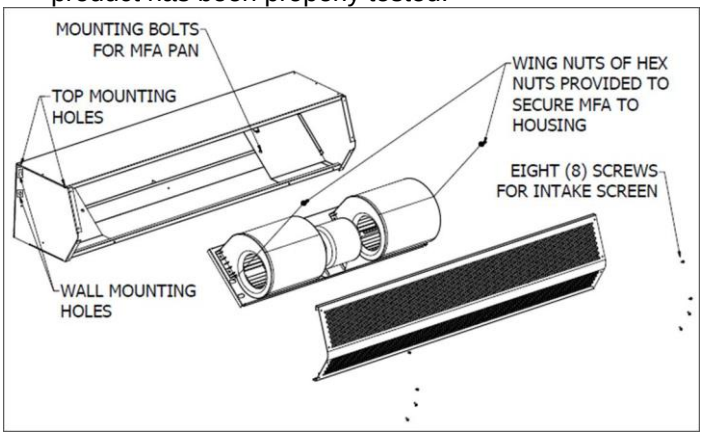

FIG. 2

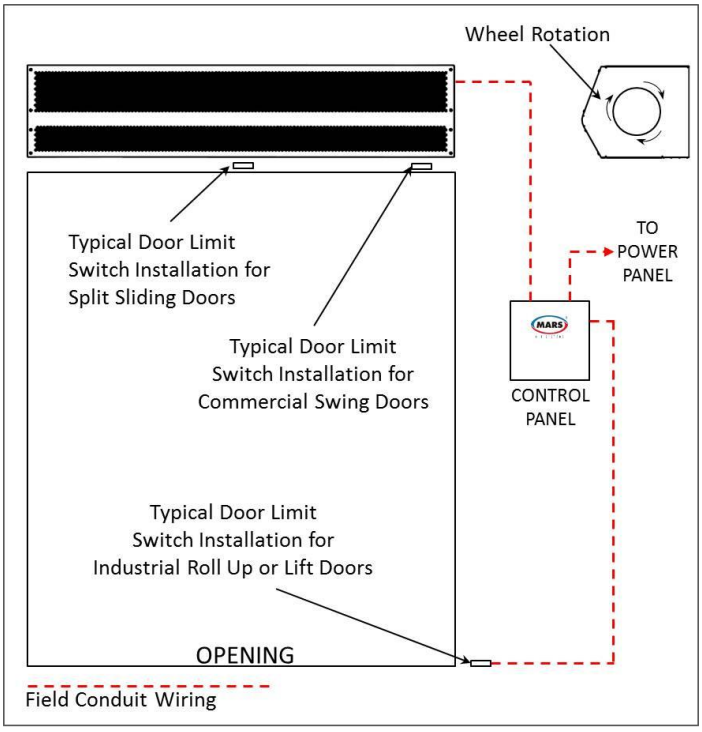

FIG. 3

NOTE

For accessory installation, reference Accessory Installation Supplement.

For heated products, reference Heated Products Supplement.

START-UP

This product has been assembled and tested at the factory prior to shipping. The following procedures should be performed to assure its performance. Before continuing with the start-up, it is important to recognize the safety controls furnished with the unit.

WARNING

The following items must all be completed by a qualified installer and checked off when completed

A. Re-check that the product has been installed properly and is level and secure.
B. Check all terminal screws are tight and field wiring is connected in accordance to National Electrical Code and wired per the enclosed wiring diagram. For electric heated models, ensure that the coils are secured and not touching each other on any metal surface.
C. Verify proper voltage prior to powering the product. (See product label for reference).
D. Check all field wired components “if supplied” are wired correctly.
E. Check that the inlet air supply and the discharge air supply are free of obstructions.
F. Check that all air filter(s) and/or air intake grille(s) are in place and installed properly, as originally shipped.
G. Verify voltage to the product once more and turn power on.
H. Regardless of whether the product is mounted on the inside or outside of the door opening, set the air directional vanes in the discharge nozzle slightly outward to approximately 10-15° towards the outside, or the wind load. (FIG. 4)

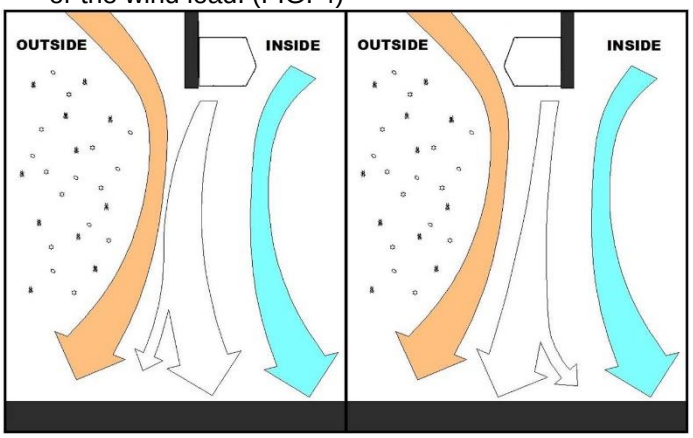

Fig. 4

I. For products with control panels, turn the HOA (Hand-On-Auto) selector switch to “On” position and open the door to energize the product. For products without a control panel or an On/Off switch, open the door to energize the product.
J. If heated products are installed, reference **Heated Products Supplement**.
K. For three phase units, verify direction of rotation of blower wheels (note direction arrows on the blower wheel housing). Correct if needed by changing polarity of three phase power.
L. **VERY IMPORTANT** Using a clamp meter, measure the amperage to each motor and ensure that they do not exceed the amperage listed on the product label.

M. If applicable, adjust the air intake grille(s) such that the output air stream reaches the floor. For temperature control and environmental separation applications, the air stream should reach the floor with sufficient strength to create an air seal around the door opening without creating turbulent mixing of the inside and outside air. For flying insect control applications, the air stream should reach the floor with maximum strength. If after proper installation and adjustment, the product appears to be producing too little or too much air for the application, contact the manufacturer.

MAINTENANCE

Routine maintenance is required to keep this product operating at its peak performance and efficiency. Over time, the housing, air intake grille, air intake filter, blower wheels and motor(s) will accumulate a buildup of dust, debris and other residue. It is imperative to keep these components clean. Failure to do so will not only lower operational efficiency and performance, but also reduce the useful life of the product. The time between cleanings depends on the application, location, and daily hours of use. On average, under normal use conditions, the product should require a thorough cleaning once every six (6) months.

WARNING

Prevent hazard of electrical shock. More than one disconnect switch may be required to de-energize this product.

WARNING

To reduce the risk of fire, electrical shock, or injury to persons, observe the following:

A. Maintenance is to be performed only by qualified personnel who are familiar with local codes and regulations and are experienced with this type of product.
B. Before servicing or cleaning the product switch power off at service panel and lock service panel to prevent power from being switched “ON” accidentally.

To clean the product, perform the following:

1. Verify the product has been disconnected from the power source.
2. Use a damp cloth and either a warm mild soapy water solution or bio-degradable degreaser, to wipe down the exterior components of the housing.
3. To access the interior of the product, remove the air intake grille and/or air intake filter. This is accomplished by removing the eight (8) self-tapping screws on the face of each air intake grille/filter.
4. Thoroughly clean the air intake grille/filter.
5. Remove the motor fan assembly (MFA) from inside the air curtain housing. This is accomplished by loosening the watertight fitting and pulling the cord out (3 phase power) or by the quick disconnect plug on the motor (1 phase power). Then remove the two (2) wing nuts on the out-board sides of the MFA pan. Care should be taken to avoid the MFA from tipping over.
6. Remove the MFA from the unit and thoroughly wipe down the motor, blower wheels and blower wheel housings. Be careful not to submerge the motor in water or spray it with a water hose.
7. The motor(s) require no additional lubrication. They are permanently lubricated and feature double sealed ball bearings.
8. To re-install the product, reverse the procedures above.
9. Reconnect the power source to the product
10. If you have any questions regarding the maintenance of the product, contact the manufacturer.

SPECIAL APPLICATIONS

Outdoor Installation

For outdoor unit special consideration may be required for enclosure, motor, wheel, and other components to minimize damage caused by exposure to the outdoor elements. Contact factory for special construction and costing.

Freezer and Cooler Installation

Air curtain must be mounted on the warm side for optimal performance. Variable Frequency Drive (VFD) is strongly recommended to control the air curtain air flow velocity at the floor level.

High humid areas may require de-humidifier or additional defrost cycle to minimize condensation and freezing for freezer applications. We recommend the air curtain unit to not replace doors but work in conjunction with door opening sequence cycle. Contact factory for details.

CAUTION

The appliance is not to be used by persons (including children) with reduced physical, sensory, or mental capabilities, or lack of experience and knowledge, unless they have been given supervision or instruction. Children are not to play with the appliance.

DISCLAIMER

Mars reserves the right to change specifications and product design without notice. Such revisions do not entitle the buyer to corresponding changes, improvements, additions, or replacements for previously purchased equipment.

atmosphere is everything

Document No: CAS-IOM
Date: 10/21/20

CLEAN AIR SERIES

NOTE

Before proceeding, refer to the units specific IOM Manual for safety, installation and start information. Verify proper voltage to the product per local and NEC codes. Ensure proper rotation for units with three phase motors.

CLEAN AIR SERIES

The HEPAC (High Efficiency Particulate Air Curtain) and UVC (Ultraviolet Curtain) section is intended for localized filtering and cleaning inside a building with a NEMA1 condition. The effective area should not exceed 15 cubic feet and may be more effective when the area is enclosed. Both options are available pre-factory mounted with the corresponding air curtains with single point connection or field retrofitted and wired by others.

HEPAC SECTION

The HEPAC section is specifically designed and compatible with the STD2 models only and available in section lengths of 36”, 42”, 48” and 60”. For longer units, multiple tandem mounted sections are used to match the unit length.

Note:

1. Factory pre-assembled HEPAC section may require the removal of the pre and HEPA filters for mounting and wiring.

The HEPAC section is not suited for outdoor use or in areas with very high and/or large particulates. The frequency of service and/or filter replacement will vary depending on the usage time and application area conditions.

UVC SECTION

The UVC section is specifically designed and compatible with both the LPV2 and STD2 models. They are available in section lengths of 36”, 42”, 48”, 60” and 72”. For longer units, multiple tandem mounted sections are used to match the unit length.

Note:

1. Factory pre-assembled UVC Section with an Air Curtain are pre-wired and ready for field installation and single point wiring.

FIELD INSTALLED HEPAC AND UVC SECTION

Both the HEPAC and UVC sections may be field installed and added to an existing unheated Mars Air Curtain unit. (Available sizes previously listed). The top and bottom must be field secured to the existing units using the pre-drilled holes provided on the sections. The number of holes may vary per the length.

For the HEPAC section, the unit should set at the highest speed for multiple speed motors. No additional wiring is required for the HEPAC section.

UVC section will required additional field mounting and wiring with existing air curtains. Please refer to the wiring instructions and diagrams provided with the UVC Section for your existing field voltage and phase.

HEPAC Exploded View

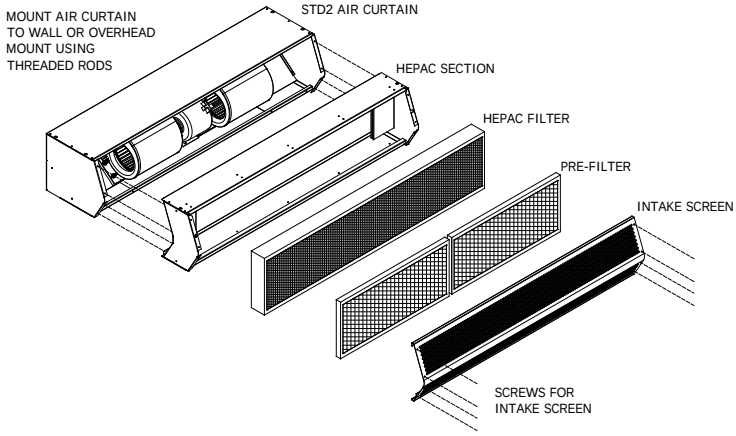

UVC Exploded View

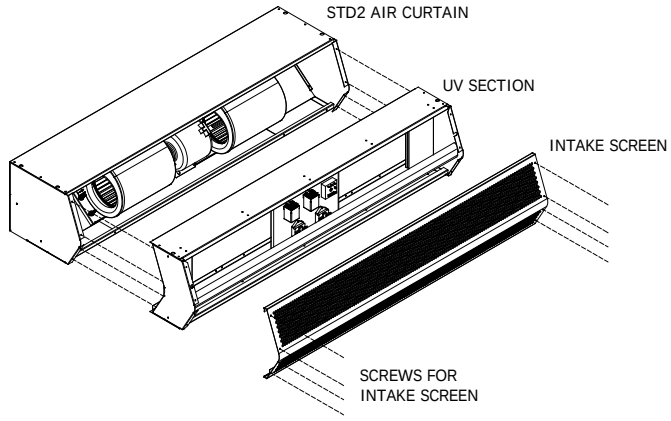

Warning:
Disconnect and lockout main power before replacing UV bulb.

14716 S. Broadway St., Gardena, CA 90248
(800) 421-1266 ● Fax: (310) 324-3030 ● www.marsair.com

TROUBLESHOOTING

PROBLEM	CAUSE	SOLUTION
NO AIR BLOWING OUT OF DISCHARGE NOZZLE	- No power being supplied to the unit from the electrical power source - Circuit breaker is tripped - Blown fuses on power supply - Motor overload is open or tripped - Motor contactor / relay defective (if applicable) - Failed switch	- Confirm power source / check if in on position - Reset circuit breaker - Replace fuses - Allow the motor to cool down; motor has auto reset internal overload; if unit is panel equipped, press reset button on overload inside panel, or replace motor overload if overload remains tripped - Check voltage to coil; check contacts to see if they are pulling in - Replace or repair limit switch
MOTOR IS RUNNING BUT FANS ARE NOT SPINNING	- Loose or broken coupling (belt drive) - Loose set screws on wheel hubs - Fan spinning inside fan housing - Broken fan hub	- Replace or tighten coupling - Tighten set screws on motor shaft flats - Tighten fan on shaft or replace fan - Replace fan wheels
ELECTRICAL CONTROLS NOT WORKING WHEN DOOR IS OPEN	- Switch is in off position - Door limit switch is not operating	- Turn unit's switch to the on position - Repair or replace door limit switch
UNIT WILL NOT TURN OFF	- Door limit switch is permanently closed or energized	- Position the door switch in a manner that turns off the unit when the door closes and turns on the unit when the door opens. Only light pressure required.
LOW AIR FLOW	- Discharge air vanes out of adjustment - Obstruction on intake or discharge - Power leads out of polarity - Blower motor rotating below normal speed - Fan rubbing against housing - Blower wheels clogged with dirt	- Adjust vanes to proper position (Refer to Start-Up Section in this manual) - Remove obstruction or move air curtain - Switch power leads to correct polarity (3 phase models only) - Apply proper voltage per unit requirement (see unit label) / Adjust adjustable motor speed knob (if applicable) - Free fan from housing - Clean and remove dirt from blower wheels
EXCESSIVE AIR VELOCITY AT DOOR OPENING	- Nozzle out of adjustment and not angled far out enough (BD only) - Air temperature too cold - Air stream pushing air outside of the building	- Adjust nozzle angle to outside - Add auxiliary heat to overcome wind chill - Adjust discharge angle back into building
AIR NOT HITTING THE FLOOR	- Low air velocity - Obstruction in the direction of air flow - Negative building pressure	- Adjust vanes to proper position or check installation height (Refer to Start-Up Section in this manual) - Remove obstruction or move air curtain (Move out 3/8" for every 1" up from the door) - Provide a make-up air system to relieve negative building pressure
UNEVEN AIR	- Shaft rotating inside fan - One motor not functioning	- Replace fan or tighten fan on shaft - Replace or repair motor
EXCESSIVE NOISE AND OR VIBRATION	- Loose or broken coupling (belt drive) - Loose set screws on wheel hubs - Fan spinning inside fan housing - Broken fan hub - Bearing end caps worn - Damaged blower wheel - Bearing end caps worn - Pillow block bearings make noise - Balancing clips missing	- Replace or tighten coupling - Tighten set screws on motor shaft flats - Tighten fan on shaft or replace fan - Replace fan wheels - Replace Bearing end caps - Replace Blower Wheel - Replace Bearing end caps - Grease Bearing - Replace Blower Wheel

TROUBLESHOOTING MOTOR

To determine if the motor is in good operating condition, compare measured motor resistance at the motor terminals to the values shown below.

MARS MOTOR RESISTANCE READINGS

Single Phase Motors

Applicable Air Curtain Series	Mars Part #	Manufacturer Part #	Brand	Motor Rating	HP	Voltage	Phase	Capacitor Rating	Motor Frame	MOTOR WIRES OR TERMINAL (T) OHM READINGS: HIGH SPEED (1750)	MEDIUM SPEED (1650)	LOW SPEED (1450)
										Black Motor Wire & White Motor Wire	-	-
LPV2, LPN2	03-001	7190-1682	Fasco	Nema 1	1/6	115	1	5 µF 370Vac	-	11.5	-	-
	03-002	7190-1903	Fasco	Nema 1	1/6	115	1	5 µF 370Vac	-	8.4	-	-
	03-003	7190-1825	Fasco	Nema 1	1/6	230	1	4 µF 440Vac	-	64	-	-
	03-004	7190-1904	Fasco	Nema 1	1/6	230	1	6 µF 370Vac	-	44.6	-	-
	03-124	7190-3307	Fasco	Nema 1	1/6	115/230	1	10 µF 370Vac	-	8.2/36	-	-
	03-124	K33NVDHJ-1446	US	Nema 1	1/6	115/230	1	10 µF 370Vac	-	8.1/32	-	-
Applicable Air Curtain Series	**Mars Part #**	**Manufacturer Part #**	**Brand**	**Motor Rating**	**HP**	**Voltage**	**Phase**	**Capacitor Rating**	**Motor Frame**	**White Motor Wire (T1) & Black Motor Wire (T3)**	**White Motor Wire (T1) & Black Motor Wire (T5)**	**White Motor Wire (T1) & Black Motor Wire (T2)**
STD2, N2, PH10, QP10	03-010	34G928X169	Baldor	Washdown (IP54)	1/2	115	1	-	56Z	1.2	-	-
	03-010	34G928X169	Baldor	Washdown (IP54)	1/2	208/230	1	-	56Z	4.6	-	-
	03-005	7124-1175	Genteq	Nema 1	1/2	115	1	7.5 µF 370Vac	48	2.6	3.8	5.2
	03-006	7124-1560	Genteq	Nema 1	1/2	208/230	1	10 µF 370Vac	48	9.9	15.9	22.5
	03-007	48S17T439	Marathon	Nema 1	1/2	277	1	-	48Z	7.7	-	-
	03-005	K055PWM1736C13H	Nidec	Nema 1	1/2	115	1	10 µF 370Vac	48Y	2.1	3.7	5.2
	03-005	K055PWM1736C13H	US	Nema 1	1/2	115	1	10 µF 370Vac	48Y	5.3	3.7	5.4
	03-006	K55HXPNA-2845	US	Nema 1	1/2	208/230	1	10 µF 370Vac	48Y	8.7	18.2	24.2
Applicable Air Curtain Series	**Mars Part #**	**Manufacturer Part #**	**Brand**	**Motor Rating**	**HP**	**Voltage**	**Phase**	**Capacitor Rating**	**Motor Frame**	**White Motor Wire (T1) & Black Motor Wire (T2)**	**White Motor Wire (T1) & Black Motor Wire (T3)**	**-**
HV2, NH2, PH12	03-021	35T276R025G1	Baldor	Washdown (IP54)	1	115	1	-	56Z	0.7	-	-
	03-015-Baldor	35M316S174	Baldor	Nema 1	1	115	1	-	56Z	0.6	-	-
	03-015-Baldor	35M316S174	Baldor	Nema 1	1	208/230	1	-	56Z	2.2	-	-
	03-021	35T276R025G1	Baldor	Washdown (IP54)	1	208/230	1	-	56Z	2.8	-	-
	03-014	7124-0985	Genteq	Nema 1	1	115	1	50 µF 370Vac	56	1.6	2.4	-
	03-015	7124-1096	Genteq	Nema 1	1	208/230	1	30 µF 370Vac	56	6.5	9.2	-
	03-015	-	Nidec	Nema 1	1	208/230	1	20 µF 370Vac	48Y	4.3	6.5	-
	03-014	K55BWJZB-2362	US	Nema 1	1	115	1	20 µF 370Vac	48Y	1	2.1	-
	03-015	-	US	Nema 1	1	208/230	1	20 µF 370Vac	48Y	3.2	6.3	-

Three Phase Motors

Applicable Air Curtain Series	Mars Part #	Manufacturer Part #	Brand	Motor Rating	HP	Voltage	Phase	Motor Frame	LEAD WIRE OHM READINGS: Black Motor Wire (L1) & Red Motor Wire (L2)	Black Motor Wire (L1) & White Motor Wire (L3)	Red Motor Wire (L2) & White Motor Wire (L3)
STD2, N2, PH10, QP10	03-008	P55YYDHB-1527	US	Nema 1	1/2	208-230	3	48	16.1	16.1	16.1
	03-008	P55YYDHB-1527	US	Nema 1	1/2	460	3	48	63.6	63.6	63.6
	03-009	48T17T135	Marathon	Nema 1	1/2	575	3	48	136	136	136
HV2, NH2, PH12	03-017	56T17T5541	Marathon	Nema 1	1	208-230	3	56Z	4.3	4.3	4.3
	03-017	56T17T5541	Marathon	Nema 1	1	460	3	56Z	16.5	16.5	16.5
	03-018	56T17T5544	Marathon	Nema 1	1	575	3	56Z	26.6	26.6	26.6
	03-022	35N127S902	Baldor	Washdown (IP54)	1	208-230	3	56Z	5.1	5.1	5.1
	03-022	35N127S902	Baldor	Washdown (IP54)	1	460	3	56Z	19.8	19.8	19.8
EP2	03-026	165716	Century	Nema 1	3	208-230	3	U56Y	1.5	1.5	1.5
	03-026	165716	Century	Nema 1	3	460	3	U56Y	5.7	5.7	5.7
	03-026	P63TYFMJ-1687	US	Nema 1	3	208-230	3	56HZ	1.2	1.2	1.2
	03-026	P63TYFMJ-1687	US	Nema 1	3	460	3	56HZ	4.4	4.4	4.4
	03-028	35E92Y26	Baldor	Nema 1	3	575	3	56Z	9.2	9.2	9.2
WMI	03-110	36H110-2211G1	Baldor	Nema 1	1,2,3	208-230	3	184Z	3.5	3.5	3.5
	03-110	36H110-2211G1	Baldor	Nema 1	1,2,3	460	3	184Z	13.5	13.5	13.5
WMH	03-055	37F932W828G1	Baldor	Nema 1	5	230	3	215YZ	0.7	0.7	0.7
	03-055	37F932W828G1	Baldor	Nema 1	5	460	3	215YZ	2.4	2.4	2.4
	03-046	37F909X889G1	Baldor	Nema 1	7	230	3	215YZ	0.6	0.6	0.6
	03-046	37F909X889G1	Baldor	Nema 1	7	460	3	215YZ	1.6	1.6	1.6
BD	03-033	U639A - 215TTFC6027	Marathon	Nema 1	10	208-230	3	215T	0.4	0.4	0.4
	03-033	U639A - 215TTFC6027	Marathon	Nema 1	10	460	3	215T	1.2	1.2	1.2
	03-074	GT1128A 170118.60	Marathon	Nema 1	25	575	3	284TS	0.5	0.5	0.5

WARRANTY

Mars' warranty coverage, period, extent, and limitations apply to the product only. It does not apply to labor. Mars warrants that the Mars product 1) is free from defects in materials and workmanship, and 2) conforms to Mars' published specifications. The warranty period for Mars products (except for heated models, custom models, or WMI, WMH and BD models) is a five (5) year period commencing on the date of shipment. The warranty for heated models is an eighteen (18) month period, the warranty for custom models and for accessories is a twelve (12) month period, and the warranty for WMI, WMH, and BD models is a twelve (12) month period. The date on the customer's invoice is the date of shipment unless Mars or your reseller informs you and Mars otherwise. Mars will provide free replacement of any part that fails as a result of a defect in material or manufacturer's workmanship. Changes in operational specification parameters that differ from those provided on the original purchase order are not covered. Mars products are inspected and tested before packaging and are shipped in working condition. The warranty for Mars products only covers free-of-charge replacement of failed parts. The warranty does not cover labor and transportation expenses that may be required to deliver and to install replacement parts. Because in many instances it is impossible to determine the cause of failure, the customer may be responsible for transportation charges associated with replacement of failed part. Mars does not warrant uninterrupted or error-free operation of Mars product. Under no circumstance is Mars liable for any of the following: 1) third-party claims against you for damages, 2) special, incidental, or indirect damages, or 3) any economic consequential damages (including lost profits and savings), regardless of whether Mars, its suppliers, or its resellers were informed of the possibility of damages. The warranty does not cover repair or exchange of Mars products resulting from misuse, accidental damage, modification, unsuitable physical or operating environment, improper maintenance or installation by customer, or failure caused by a product for which Mars is not responsible. The warranty does not cover damages caused by mishandling during transportation. The warranty is voided by removal or alteration of Mars product or parts identification labels, and by improper installation of product and resulting non-compliance with federal, state, and local codes and regulations. Additionally, Mars reserves the right to void the warranty for non-payment of invoice.

CONTACT FACTORY FOR COMPLETE PARTS LIST FOR ALL MODELS.

KEEP THIS MANUAL FOR YOUR RECORDS.

Model Number:_____

Serial Number: _____

Date Purchased: _____

Dealer Purchased From: _____

atmosphere is everything

14716 S. Broadway St., Gardena, CA 90248

(310) 532–1555 ● (800) 421-1266

Fax: (310) 324-3030

Please go to our website at www.marsair.com for a downloadable version of this document.