Bistro 10

NEWCO
ENTERPRISES, INC.

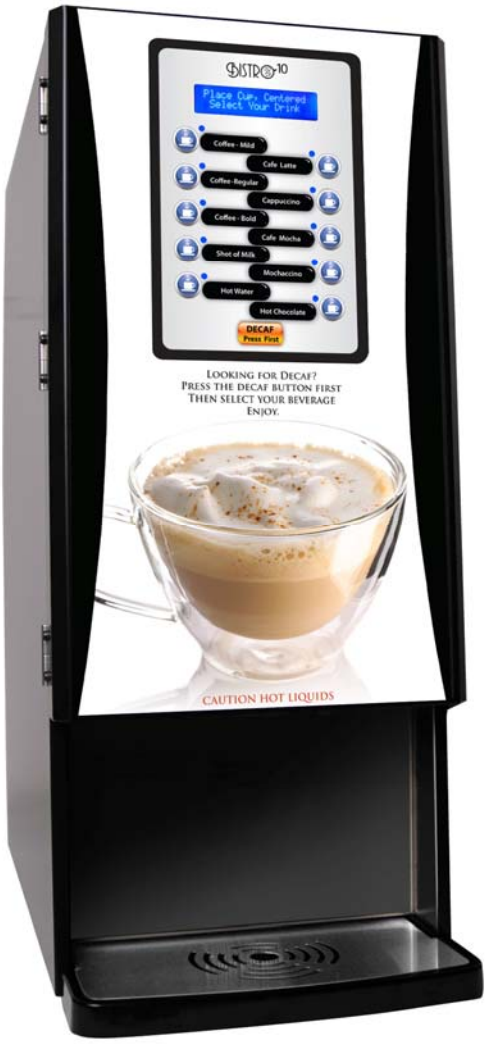

Operating Instruction Manual
Model B-10-T

1-800-325-7867

3650 NEW TOWN BLVD ST. CHARLES MO 63301
WWW.NEWCOCOFFEE.COM

Table of Contents

Introduction & NEWCO Product Warranty…….. 4

Machine Dimensions & Specifications……. 5

Machine Features……... 6

Plumbing Connections……... 7

Installation Instructions…… 8

Set Up for Bistro 10 Unit……... 9

Product Installation Procedure……. 9

Drink Selection and Keypad Display……... 12

Programming Instructions…… 12

Programming-Machine Calibration……. 17

Programming-Changing Drink Recipes…….. 19

Daily Cleaning…… 20

Whipper Disassembly…… 21

Cleaning and Sanitizing Instructions……... 22

Service Notes……... 31

Wiring Diagram……. 32

Warning Labels

NOTICE: Read and follow all notices posted on this machine. Do not damage or destroy these notices as they are for your protection

WARNING

DO NOT USE PLASTIC TUBING
WHEN INSTALLING WATER LINE.
USE COPPER TUBING

THIS EQUIPMENT IS TO BE INSTALLED TO COMPLY WITH THE BASIC PLUMBING CODE OF THE BUILDING OFFICIALS AND CODE ADMINISTRATORS INTERNATIONAL, INC. (BOCA) AND THE FOOD SERVICE SANITATION MANUAL OF THE FOOD AND DRUG ADMINISTRATION (FDA).

! WARNING

- DO NOT OVERLOAD CIRCUIT.
- ALWAYS ELECTRICALLY GROUND THE CHASSIS OR ADAPTOR PLUG.
- DO NOT DEFORM PLUG OR CORD.
- FOLLOW NATIONAL AND LOCAL ELECTRICAL CODES.
- KEEP COMBUSTIBLES AWAY.

FAILURE TO COMPLY RISKS EQUIPMENT DAMAGE, FIRE OR SHOCK HAZARD.

READ THE ENTIRE OPERATING MANUALBEFORE USING THIS PRODUCT

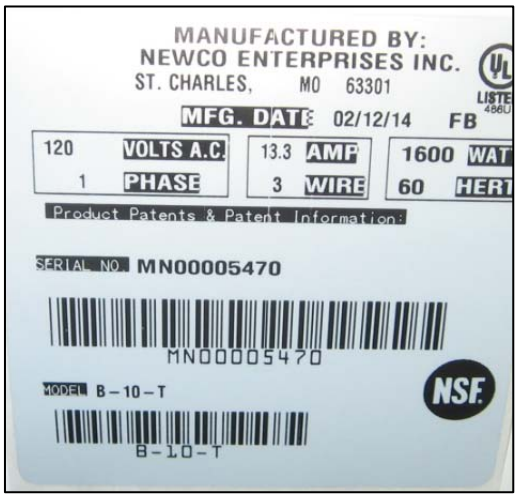

Introduction & Newco Product Warranty

INTRODUCTION

This machine is intended to brew 6-16 ounce single serving of coffee and / or powdered hot drinks into a cup. This machine will also dispense hot water for allied beverage use. It is intended for indoor use only on a sturdy counter or shelf.

WARRANTY

Newco warrants equipment manufactured by it for 1 year parts and labor.

These warranty periods run from the date of sale Newco warrants that the equipment manufactured by it will be commercially free of defects in material and workmanship existing at the time of manufacture and appearing within the applicable warranty period. This warranty does not apply to any equipment, component or part that was not manufactured by Newco or that, in Newco's judgment, has been affected by misuse, neglect, alteration, improper installation or operation, improper maintenance or repair, damage or casualty. This warranty is conditioned on the Buyer 1) giving Newco prompt notice of any claim to be made under this warranty by telephone at (800) 556-3926 or by writing to 3650 New Town Blvd, Saint Charles, MO 63301; 2) if requested by Newco, shipping the defective equipment prepaid to an authorized Newco service location; and 3) receiving prior authorization from Newco that the defective equipment is under warranty.

THE FOREGOING WARRANTY IS EXCLUSIVE AND IS IN LIEU OF ANY OTHER WARRANTY, WRITTEN OR ORAL, EXPRESS OR IMPLIED, INCLUDING, BUT NOT LIMITED TO, ANY IMPLIED WARRANTY OF EITHER MERCHANTABILITY OR FITNESS FOR A PARTICULAR PURPOSE. The agents, dealers or employees of Newco are not authorized to make modifications to this warranty or to make additional warranties that are binding on Newco. Accordingly, statements by such individuals, whether oral or written, do not constitute warranties and should not be relied upon.

If Newco determines in its sole discretion that the equipment does not conform to the warranty, Newco, at its exclusive option while the equipment is under warranty, shall either 1) provide at no charge replacement parts and/or labor (during the applicable parts and labor warranty periods specified above) to repair the defective components, provided that this repair is done by a Newco Authorized Service Representative; or 2) shall replace the equipment or refund the purchase price for the equipment.

THE BUYER'S REMEDY AGAINST NEWCO FOR THE BREACH OF ANY OBLIGATION ARISING OUT OF THE SALE OF THIS EQUIPMENT, WHETHER DERIVED FROM WARRANTY OR OTHERWISE, SHALL BE LIMITED, AT NEWCO'S SOLE OPTION AS SPECIFIED HEREIN, TO REPAIR, REPLACEMENT OR REFUND.

In no event shall Newco be liable for any other damage or loss, including, but not limited to, lost profits, lost sales, loss of use of equipment, claims of Buyer's customers, cost of capital, cost of down time, cost of substitute equipment, facilities or services, or any other special, incidental or consequential damages.

Machine Dimensions & Specifications

120 VAC-1600W HEATER-15A USA POWER SUPPLY
120 VAC-1400W HEATER-15A CANADIAN POWER SUPPLY
1/2 GALLON TANK 6-16 OZ CUP SIZE TEMPERATURE RANGE 180-205F

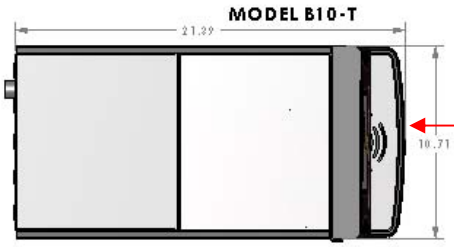

DRIP TRAY
&
DRIP TRAY
GRATE

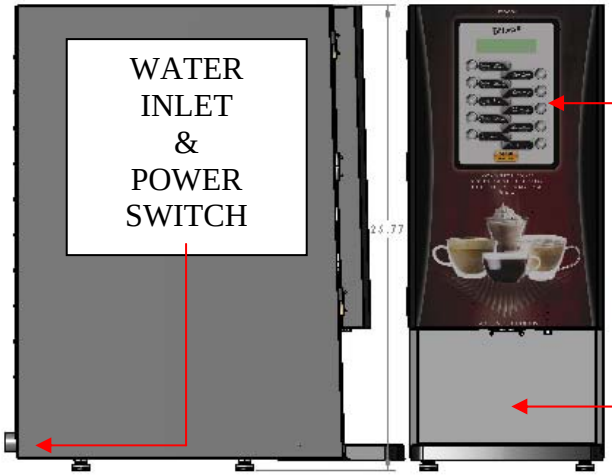

WATER
INLET
&
POWER
SWITCH

PRODUCT
SELECTION
SWITCH
PAD
&
DISPLAY

PRODUCT
DISPENSE
AREA
(CUP)

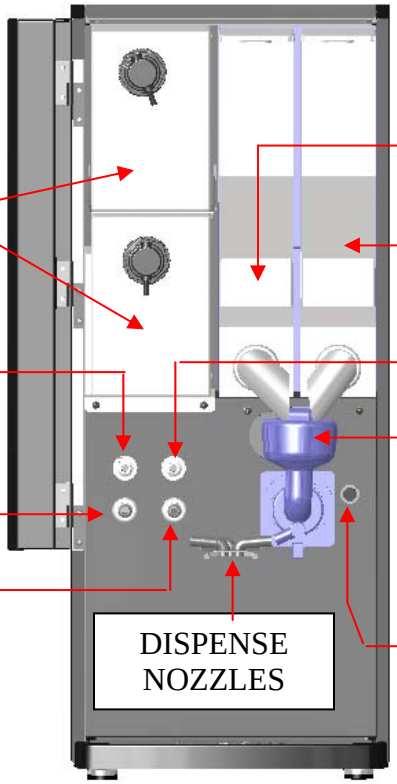

LIQUID
COFFEE
BIBS

CHOCOLATE CANISTER

MILK CANISTER

REG COFFEE INLET

DECAF COFFEE INLET

HOT WATER
OUTLET

WHIPPER
CHAMBER

COFFEE
OUTLET

DISPENSE
NOZZLES

RINSE
BUTTON

- **CALIBRATION NEEDED: POWDER PRODUCTS**
- **DECAF BUTTON SWITCHES TO DECAF BIB**
- **WHIPPER RINSE BUTTON**
- **AUTOMATIC POWDER LEVEL RESET**
- **PRE-PROGRAMMED DRINK RECIPES**
- **BUTTON ASSIGNMENT FOR RECIPES**
- **INDEPENDENT POWDER HOPPER COUNTDOWN & RESET**
- **CUSTOM CALL FOR SERVICE NUMBER**
- **POWER SAVE & POWER DOWN OPTION**
- **WATER FILTER MONITORING OPTIONS**
- **BEEPER VOLUME CONTROL**
- **PUSH & HOLD HOT WATER BUTTON**
- **DUMP VALVE DELIVERY FOR POWDERS**
- **4 LB HOPPER SIZE**

THIS IS CONFIGURED AND READY TO DISPENSE 8-OUNCE DRINKS. TO CHANGE RECIPES SEE PROGRAMMING SECTION, MACHINE SET-UP.

“Powder” and “All” button lock or unlock:

Powder Lock Only: Push decaf button 4 times to lock or unlock.
All Button Lock [including powder]: Push decaf button 5 times to lock or unlock.

Special Programming: Press the decaf button or symbol button, as the unit is being powered up. In set-up you can change from 10 to 10T.

Plumbing Connections

Plumber's Installation Instructions

CAUTION: Disconnect Power to machine before proceeding with plumbing installation.

1) Attach water line to water filter, rear of machine.
2) Flush water line before installing machine. Machine should be connected to COLD WATER LINE ONLY.
3) Water pressure should be at least 40 lbs. For less than a 25 ft run, use 1/4" copper tubing and connect to 1/2" or larger water line. For longer runs, use 3/8" copper tubing & connect to 1/2" or larger water line and provide an adapter fitting for connection to the brewer. **A dedicated water line is necessary for this machine. Minimum flow rate is 1GPM.**
4) If installed with saddle valve, the valve should have a minimum of 1/8" porthole for up to 25 ft run, and 5/16" porthole for over 25 ft runs.
5) **Manufacturer recommends connecting to copper tubing.**

Electrical Hook-Up

WARNING

The Machine must be disconnected from the power source until specified in Installation Instructions.

Determine the available on-site electrical requirements

Refer to Data Plate on the Machine, and local/national electrical codes to determine circuit requirements.

CAUTION – Improper electrical installation will damage electronic components.

Installation Instructions

WARNING: - Read and follow installation instructions before plugging or wiring in machine to electrical circuit. Warranty will be void if machine is connected to any voltage other than that specified on the nameplate serial tag.

1) **Machine must be on a flat and level surface. Plug or wire in machine to appropriate voltage as noted on the brewer serial tag. Serial tag is located on inside of machine.**
2) **With water line connected, turn machine power ON (power switch located lower left rear of machine). Install Drip tray and drip tray grate under brew area (slide tray between guide rails until seated).**
3) **Tank will automatically fill, and machine will start heating. If tank does not fill in 8 minutes, a "tank fill error" will occur. (Note: To reset error power machine on/off with power switch).**
4) **Allow 5 to 10 minutes for water in tank to heat to brewing temperature. (Additional water may drip into drip tray on initial expansion of water in the tank). This will not occur thereafter.**
5) **Heater will turn on when tank is at probe level. When tank noise is no longer heard, machine is ready to operate. If brew is initialized before tank temperature is reached, machine will display "Heating" until temp is reached, then will start dispensing.**
6) **In higher altitude locations (5000 feet above sea level) the temperature may have to be adjusted lower to prevent boiling [adjust temperature in set-up]:**

Brew water temperature is factory set at 202o F (94.4o C) Areas of high altitude will require lowering this temperature to prevent boiling. This chart should be used as a guide when readjusting the brew water temperature.		
Altitude (Feet)	Boiling point of water o F o C	Recommended water temperature o F o C
-1000	213.8 101.0	200 93.3
-500	212.9 100.5	200 93.3
0	212.0 100.0	200 93.3
500	211.1 99.5	200 93.3
1000	210.2 99.0	200 93.3
1500	209.3 98.5	200 93.3
2000	208.4 98.0	200 93.3
2500	207.4 97.4	200 93.3
3000	206.5 96.9	199 92.8
3500	205.6 96.4	198 92.2
4000	204.7 95.9	197 91.7
4500	203.8 95.4	196 91.1
5000	202.9 94.9	195 90.6
5500	201.9 94.4	195 90.6
6000	201.0 93.9	194 90.0
6500	200.1 93.4	193 89.4
7000	199.2 92.9	192 88.9
7500	198.3 92.4	191 88.3
8000	197.4 91.9	190 87.8
8500	196.5 91.4	189 87.2
9000	195.5 90.8	188 86.7
9500	194.6 90.3	187 86.1
10000	193.7 89.8	186 85.6

Set up instructions for Bistro 10-T Machine

Fill and install ingredient hoppers with nozzles turned up, Chocolate on left and Milk on right. Make sure "button" on bottom of hopper is seated in slot in sheet metal. Slight manual rotation of the auger gear may be necessary to seat hopper in correct location.
Rotate dispense nozzles down into whipper bowl.

Turn machine on, machine should start filling, will shut off when full.

Heater will turn on when tank is at probe level and will display Heating: Please Wait. When machine temperature reaches brew temp, display will change to "Ready to Brew". If brew is initialized before tank temperature is reached, machine will display "Heating" until temp is reached, then will start dispensing.

Place an empty cup in the dispense area, open the powdered hopper door, and depress the "Rinse" button next to the whipper bowl until the water runs clear.

To dispense a drink, place a cup under the dispense area, press a brew selection, and press the button on the keypad which corresponds to the drink desired. When the drink is finished, the machine will beep 3 times and the display will change to "Place cup, Centered-Select Your Drink"

NOTE: TO DISPENSE HOT WATER PUSH AND HOLD "HOT WATER" BUTTON, WATER WILL DISPENSE UNTIL BUTTON IS RELEASED, OR TIMES OUT AT 12 SECONDS

Product Installation Procedure

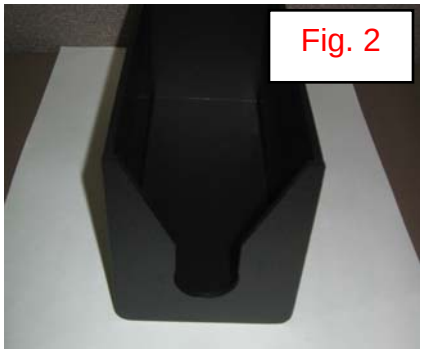

- Open product box and remove the BIB product Fig. 1. Place in BIB Tray [PN121929] as shown in Fig.2 & Fig. 3.

Product Installation Procedure Cont'd

- Remove the plastic insert from the BIB fitment as shown in Figure 4.

- Using finger and thumb only to prevent over-tightening, thread the BIB connector on to the BIB fitment until seated as shown in Figure 5.

Product Installation Procedure Cont'd

Fig. 6

- Place the product in the storage compartment as shown in Figure 6.

Fig. 7

- Position the tubing as shown in Figure 7 NOTE: COFFEE BIB IS LH CONNECTOR AND DECAF BIB IS RH CONNECTOR SEE PAGE 5

Drink Selection and Keypad Display

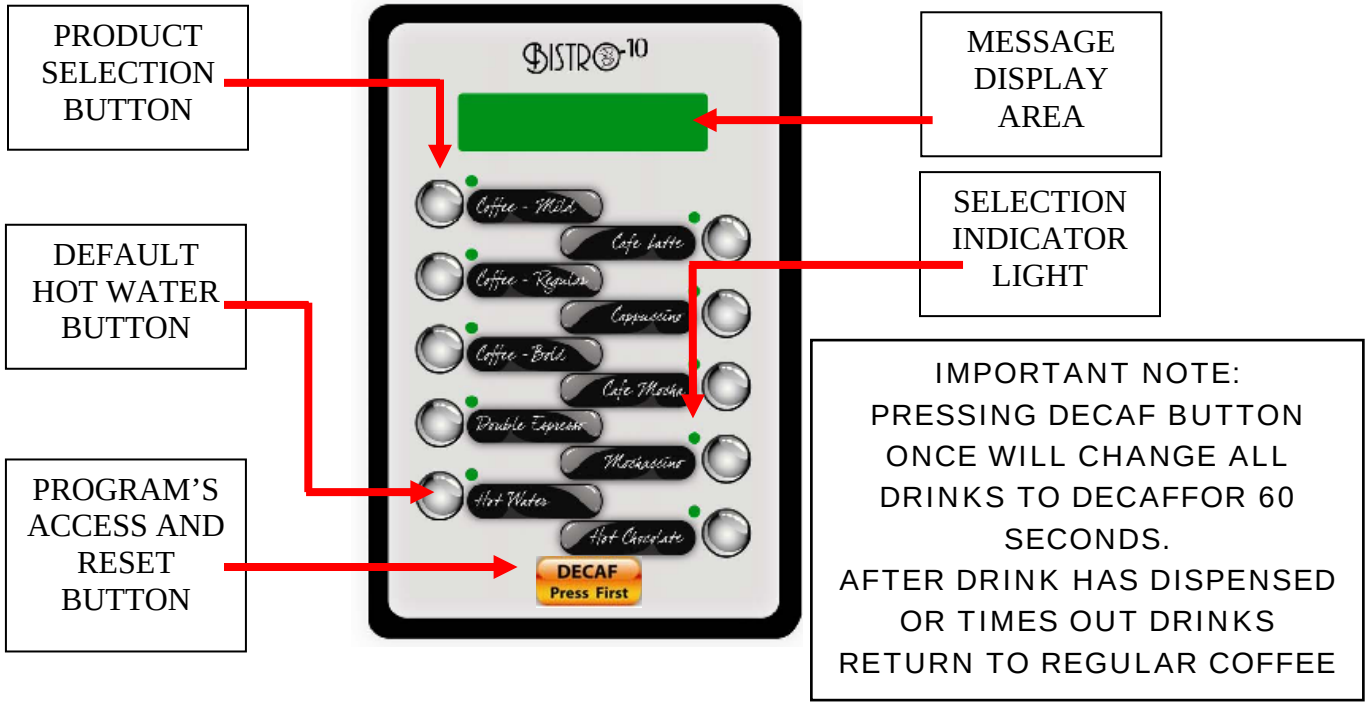

Programming Instructions

To enter into "Programming Mode", hold the '***Decaf***' button for 7 seconds. **(Note, after 2 seconds display will change to Sanitation Mode, continue holding button until display reads "Maintenance").**

.

The machine readout will display Select Menu Maintenance in the Message Display Area.

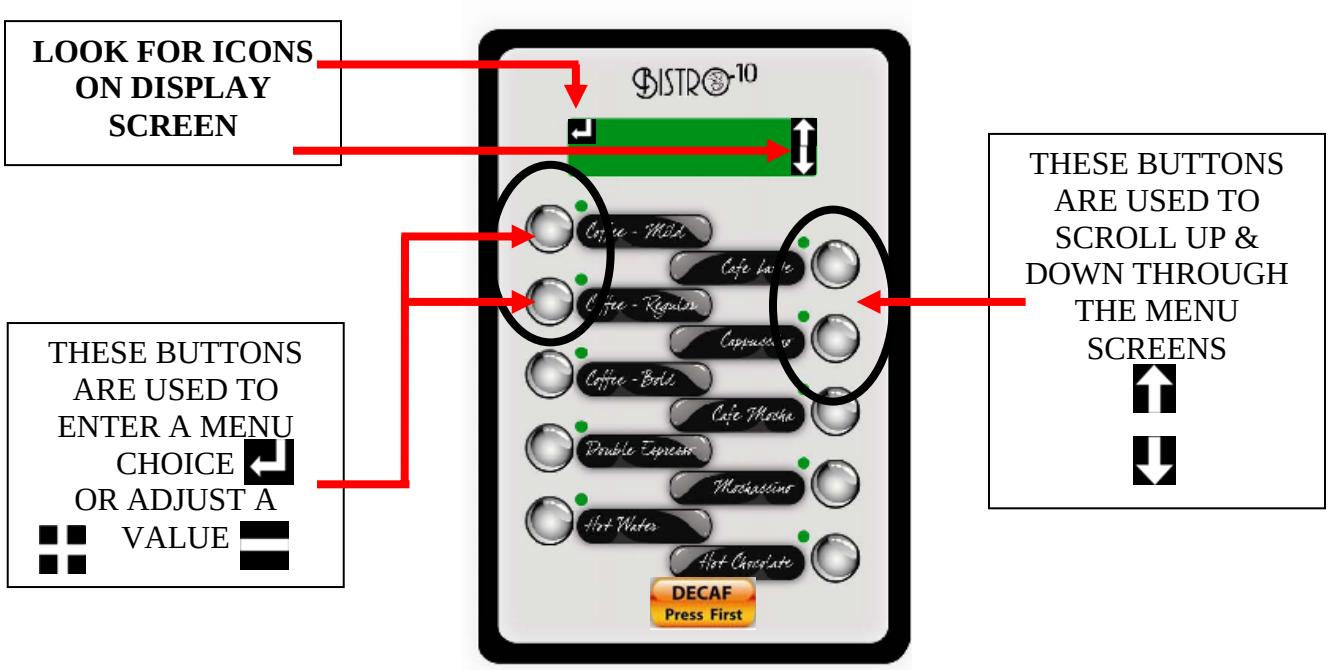

Programming Instructions (Cont'd)

Pressing the "COFFEE-MILD" Button will select the Mode Displayed

Pressing the "LATTE" Button will scroll forward through the Select Menu Choices

Pressing the "CAPPUCCINO" Button will scroll backwards through the Select Menu Choices

Pressing the "LATTE" button repeatedly will loop the display in 5 Modes:
Maintenance---Statistics---Setup---Calibration –Recipe Entry--Exit Program Mode

Maintenance

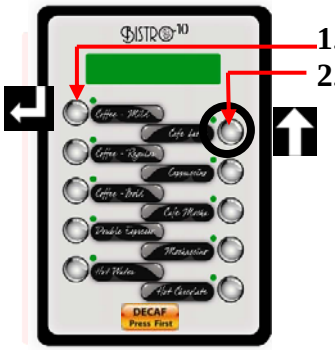

1. Press Button to Select "Maintenance"
2. Press "LATTE" Button to toggle Select Menu display

Install Sanitizing solution-Push Decaf Button to Start Sanitation Cycle (See Pages 22-27)
Push & Hold Newco Decaf Button to Prime Pump (See Pages 22-27)
Whipper Seal Remaining (Remaining powdered drink cycles before changing the whipper seal)
Whipper Seal Reset (Select this after changing the whipper seal to reset whipper seal countdown)
Exit Maintenance Mode

REPLACEMENT WHIPPER SEAL PN 781566
SEE PAGE 21 [replace after 5000 cycles]

Statistics

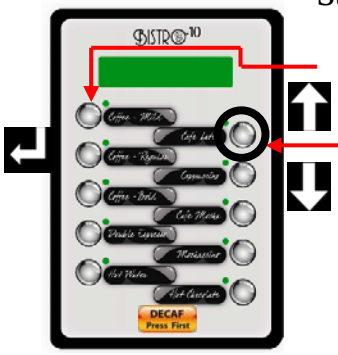

1. Press Button to Select "Statistics"

2. Press "LATTE" Button to Toggle display forward

Total run cycles on machine
Total Gallons water used
Chocolate Powder Remaining
Milk Powder Remaining
Exit Statistics Mode

Information Display Only

Programming-Cont'd

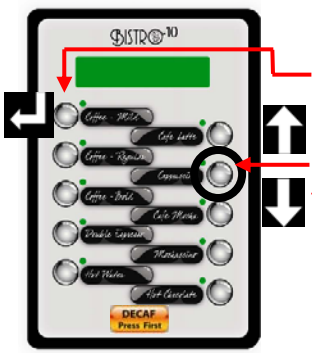

Setup

1. **Press Button to Select "Setup"**
2. **Press Button to Toggle display**

Water Temperature Setting (170-205 F)
Buzzer volume 0-25
Filter Monitoring (On or Off)
Filter size 500 1000 1500 5000 gallons (Only displays if "ON")
Energy Save (Off, Semi [140F], Full [0FF]
Energy Time -.5 to 4.0 Hrs. after last push (Only displays if "ON")
Assign Recipes to Buttons *See Page 15
Edit Global Ratio (Default Ratio is 30:1-Can change to 25, 35, 40, 45:1)
Call for service # (Re-settable phone Number) *See Page 16
Powder Tracking (On or Off)
Choc Hopper Value-Grams of Chocolate in a full hopper (Only displays if "ON")
Milk Hopper Value-Grams of Milk in a full hopper (Only displays if "ON")
Cup Sensor (Optional Accessory) On or Off
Exit Setup

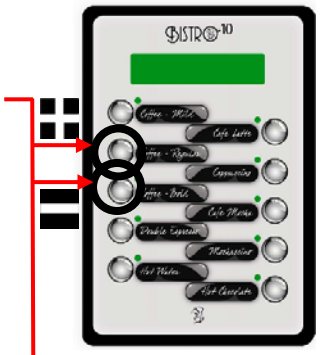

3. Use to Change Values UP Or DOWN

- **Water Temp Setting-Factory Default is 185 Deg F**
- **Buzzer Volume-Factory Setting is 13, + or - to hear volume change**
- **Filter Size-Select Filter size- 0 turns Filter Tracking off-If turned on filter size selections in gallons are: 500, 1000, 1500, 2000, 2500 and 3000. Message to change filter will appear when gallon usage is exceeded**
- **Energy Save-Selecting Partial or Full Mode asks delay time in hours after last drink has been dispensed (1-4 Hours)**

Assign Recipe to Buttons (See Page 15)

- **Edit Global ratio allows the use of Coffee concentrate ratios of 25:1, 30:1, 35:1, 40:1 and 45:1. Default value is 30:1**

Call for Service #-See Page 16

- **When Powder Tracking is turned "ON" Message to refill Hopper will appear when hopper is low. Chocolate and Milk Hopper values are the weight of the powder only in a full hopper. Default values are 850 Grams for Chocolate and 550 Grams for Milk. These values can be changed by toggling, step (3), above. Hoppers will automatically reset when removed from the machine for more than 15 seconds.**

Programming-Cont'd

Assigning Recipes to Buttons

1. Press Button to Select "Setup"

2. Toggle Selection to "Assign Recipes"

3. Select Assign Recipes

4. Scroll Up & Down Recipe Choices with these Two Buttons

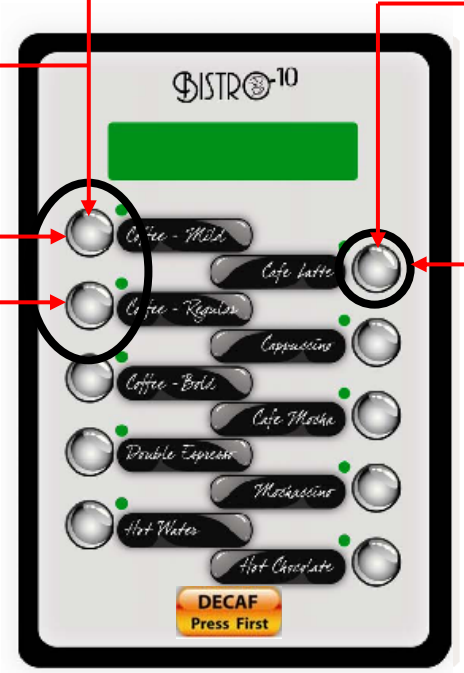

5. Select Recipe to be assigned a Button

6. All lights will flash Depressing a button will assign the new recipe to that button

7. Selection Screen Will Return to "Assign Recipes" (Return to Instruction #3 to Repeat Button Assignment or Instruction #2 to Exit Menu)

Recipe List

1	Coffee 6oz Mild	22	Latte 10oz Single	43	Cappuccino 16oz Sgl	64	Mochaccino 6oz Sgl	85	Cafe Mocha 10oz Mld
2	Coffee6oz Reg	23	Latte 10oz Double	44	Cappuccino 16oz Dbl	65	Mochaccino 6oz Dbl	86	Cafe Mocha 10oz Reg
3	Coffee 6oz Bold	24	Latte 10oz Triple	45	Cappuccino 16oz Tpl	66	Mochaccino 6oz Tpl	87	Cafe Mocha 10oz Bld
4	Coffee 8oz Mild	25	Latte 12oz Single	46	Hot Cocoa 6oz Mild	67	Mochaccino 8oz Sgl	88	Café Mocha 12 oz Mld
5	Coffee 8oz Reg	26	Latte 12oz Double	47	Hot Cocoa 6oz Reg	68	Mochaccino 8oz Dbl	89	Cafe Mocha 12oz Reg
6	Coffee 8oz Bold	27	Latte 12oz Triple	48	Hot Cocoa 6oz Bold	69	Mochaccino 8oz Tpl	90	Café Mocha 12 oz Bld
7	Coffee 10oz Mild	28	Latte 16oz Single	49	Hot Cocoa 8oz Mild	70	Mochaccino 10oz Sgl	91	Cafe Mocha 16oz Mld
8	Coffee 10oz Reg	29	Latte 16oz Double	50	Hot Cocoa 8oz Reg	71	Mochaccino 10oz Dbl	92	Cafe Mocha 16oz Reg
9	Coffee 10oz Bold	30	Latte 16oz Triple	51	Hot Cocoa 8oz Bold	72	Mochaccino 10oz Tpl	93	Café Mocha 16 oz Bld
10	Coffee 12oz Mild	31	Cappuccino 6oz Sgl	52	Hot Cocoa 10oz Mild	73	Mochaccino 12oz Sgl	94	Steamer 6oz
11	Coffee 12oz Reg	32	Cappuccino 6oz Dbl	53	Hot Cocoa 10oz Reg	74	Mochaccino 12oz Dbl	95	Steamer 8oz
12	Coffee 12oz Bold	33	Cappuccino 6oz Tpl	54	Hot Cocoa 10oz Bold	75	Mochaccino 12oz Tpl	96	Steamer 10oz
13	Coffee 16oz Mild	34	Cappuccino 8oz Sgl	55	Hot Cocoa 12oz Mild	76	Mochaccino 16oz Sgl	97	Steamer 12oz
14	Coffee 16oz Reg	35	Cappuccino 8oz Dbl	56	Hot Cocoa 12oz Reg	77	Mochaccino 16oz Dbl	98	Steamer 16oz
15	Coffee 16oz Bold	36	Cappuccino 8oz Tpl	57	Hot Cocoa 12oz Bold	78	Mochaccino 16oz Tpl	99	Shot of Milk
16	Latte 6oz Single	37	Cappuccino 10oz Sgl	58	Hot Cocoa 16oz Mild	79	Cafe Mocha 6oz Mild	100	Hot Water
17	Latte 6oz Double	38	Cappuccino 10oz Dbl	59	Hot Cocoa 16oz Reg	80	Cafe Mocha 6oz Reg	101	No Drink (Disables Button)
18	Latte 6oz Triple	39	Cappuccino 10oz Tpl	60	Hot Cocoa 16oz Bold	81	Cafe Mocha 6oz Bold	102-200	No Recipe (Custom Recipes)
19	Latte 8oz Single	40	Cappuccino 12oz Sgl	61	Espresso Shot Sgl	82	Cafe Mocha 8oz Mild		
20	Latte 8oz Double	41	Cappuccino 12oz Dbl	62	Espresso Shot Dbl	83	Cafe Mocha 8oz Reg		
21	Latte 8oz Triple	42	Cappuccino 12oz Tpl	63	Espresso Shot Tpl	84	Cafe Mocha 8oz Bold		

Programming-Cont'd

Changing "Call For Service" Number

Note: Whenever the machine detects a service problem, a description of the problem and a "Call for Service" Telephone Number Scrolls across the Display. This number can be changed during machine Set-Up.

Select the "Call for Service # in the "Set-Up" Menu

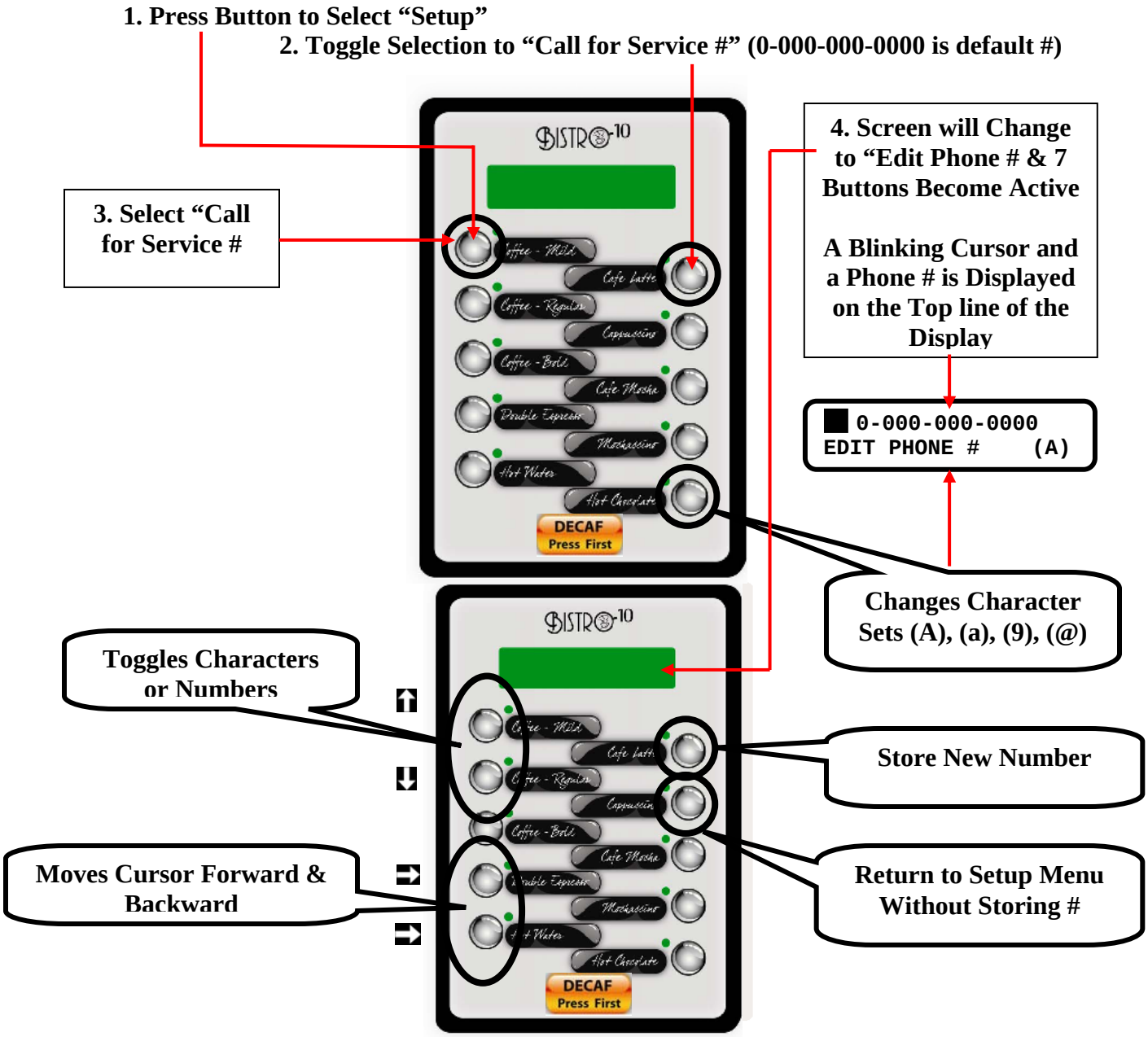

Character Set (A) A-Z Character Set (a) a-z Character Set (9) 1-9
Character Set (@)! " # $ % & ' ( ) * + , - . / 0 1 2 3 4 5 6 7 8 9: ; < = >?@ (SPACE)

Programming -Machine Calibration

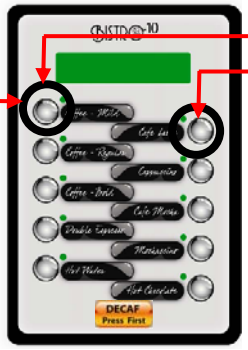

Calibration

1. Press Button to Select "Calibration"

2. Toggle Selection to "Calibration"

3. Select "Calibration"

4. Press Button to Toggle display

Mix Bowl Calibration Value (Ounces)
Left Auger Speed 0-10
Left Auger Calibration Value in grams
Right Auger Speed 0-10
Right Auger Calibration Value in grams
Coffee Calibration Value (Ounces)
Exit Calibration

Factory Defaults	Value
Mix Bowl Cal	26.0 oz.
Left Auger Speed	9
Left Auger Cal	156 grams
Right Auger Speed	9
Right Auger Cal	90 grams
Coffee Cal	23.0 oz.

5. Use to ChangeValues UP or DOWN

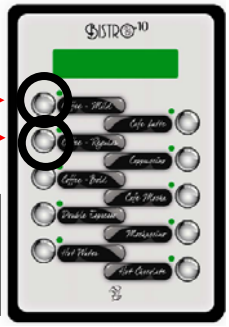

Dump Valve

"Mix Bowl Cal", Insert a measuring container capable of holding 32 or more ounces of water under delivery area of machine, then press the top left button to start calibration countdown period of 30 seconds. (Note: if machine is not up to temperature, machine will wait until temperature is reached before running calibration cycle, display will read "Preparing to Brew") At the end of the calibration cycle, display will change to "Adjust Mix bowl Cal"
Enter the value measured (Step 5, above right) and press the Upper Right button when done- screen will change to "Mix Bowl Cal" again. This is in case there was a spill or problem during the cycle and the measurement needs to be repeated- - to repeat press the top right button to restart cycle.

Left Auger (Choc)

"Left Auger Speed (Chocolate)", this is the left or chocolate auger delivery duty cycle value, 1-10, to adjust the auger motor speed for delivering powdered product. This value should remain at 9 or 10 for the Wolfgang Puck powdered products. **Value is set at 9 at the factory.**

"Left Auger Cal" (Chocolate), remove whipper chamber and hold a 12 ounce plastic cup under the left auger dispense spout, then press either of the top two buttons to start calibration countdown period of 30 seconds. At the end of the calibration cycle, display will change to "Adjust Value". Use the upper left buttons to toggle the value, increasing or decreasing value until the display number matches the amount of the powder measured in grams (see instruction #5 above). Press the Upper Right button when done- screen will change to "Left Auger Cal" again. This is in case there was a spill of problem during the cycle and the measurement needs to be repeated- to repeat press the top right button to restart cycle. **The default value is 156 Grams (5.5 oz)**.

Programming -Machine Calibration-Cont'd

Right Auger (Milk)

"Right Auger Speed" (Milk), this is the right or milk product auger delivery duty cycle value, 1-10, to adjust the auger motor speed for delivering powdered product. This value should remain at 9 or 10 for the Wolfgang Puck powdered products. **Value is set at 9 at the factory.**

"Right Auger Cal" (Milk), repeat the same steps as "Left Auger Cal" measuring the product from the right canister (Milk Product) **The default value is 90 Grams (3.17 oz)**

Dump Valve

"Coffee Cal", Insert a container capable of holding 32 or more ounces of water under delivery area of machine, then press the top left button to start calibration countdown period of 30 seconds. (Note: if machine is not up to temperature, machine will wait until temperature is reached before running calibration cycle, display will read "Preparing to Brew") At the end of the calibration cycle, display will change to "Adjust Coffee Cal" Enter the value measured (Step 5, above right) and press the Upper Right button when done- screen will change to "Adjust Coffee Cal" again. This is in case there was a spill or problem during the cycle and the measurement needs to be repeated- - to repeat press the top right button to restart cycle.

Programming-Changing the Drink recipes

Changing the Drink recipes

NOTE: Editing and Changing the Name of a "No Recipe" recipe will Create a "New" Drink for that Recipe #.

1. Press to Select Recipe Entry

2. Scroll Up & Down Recipe Choices with these Two Buttons

3. Select Recipe to be Viewed or Edited

4. Each time Button is Pushed Recipe Screen Advances to Next Option

SEE OPTIONS BELOW

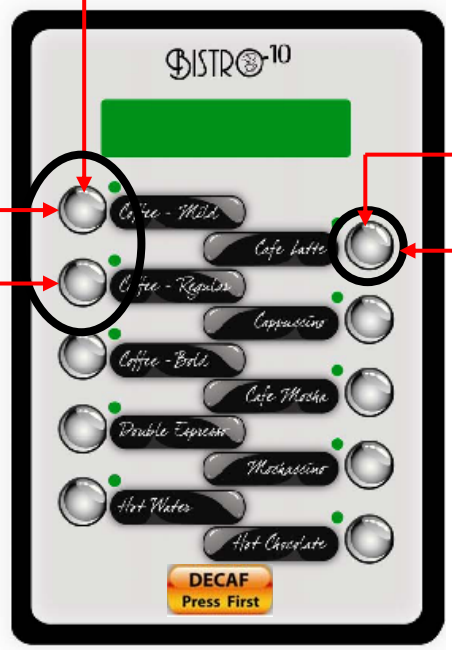

5. Selection Screen Will Return to "Select Menu Recipe Entry" (Return to Instruction #1 To Edit Another Recipe Press "Café Latte" Button To Exit

Recipe Options

Type:
Perist. PreTime:
Cof Volume:
Cof Dly time:
Pump Speed:
Mix Bwl Vol:
Mix Bwl Dly:
Mix Bwl Run time: FIXED
Milk Gm/Oz:
Choc Gm/Oz:
Edit Recipe Name:

TYPE: Type of recipe, i.e. Coffee, Latte, Hot Chocolate, etc.
PERIST . PRETIME: Time in 1/10th of a second Coffee Pump runs w/o water.
COF VOLUME: Volume, in ounces, of the coffee portion of the drink.
COF DLY TIME: Time in 1/10th of a second Coffee portion of the drink is delayed.
PUMP SPEED: Adjusts Coffee strength-speeds 1-25, 25 being the highest strength.
MIX BWL VOL: Volume, (oz.) of the Milk and/or Chocolate portion of drink.
MIX BWL DLY: Time in 1/10th of a second Coffee Pump runs without water.
MIX BWL RUN TIME: Cannot change, info only. (Info for coffee delay, i.e.)
MILK GM/OZ: Adjusts the strength of the Milk portion of the drink (gm/oz.)
CHOC GM/OZ: Adjusts the strength of the Choc. portion of the drink (gm/oz)
EDIT RECIPE NAME: Change the name of the drink (See pg. 16 for char map)

Daily Cleaning

1. **Place empty cup in dispense area**
2. **Push and hold “Rinse” Button until water runs clear (Rinses Mixing bowl and Coffee Mix Chamber) Empty and remove cup**
3. **Rotate Tab on Whipper Base Counterclockwise to “Five O-Clock”**
4. **Pull and rotate Dispense Nozzle away from Whipper Bowl**
5. **Lift and remove Steam Cap from Whipper Bowl, Pull and Remove Whipper chamber from Base**
6. **Wash Steam Cap, Whipper Bowl and Whipper Blade in Warm Soapy Water**
7. **Remove Coffee, Milk & Chocolate Canisters & wipe Product Compartment with warm soapy water**
8. **Dry parts with a clean dry towel and re-assemble Whipper Chamber-Secure by turning tab clockwise on Whipper Base to “Six O-Clock”**

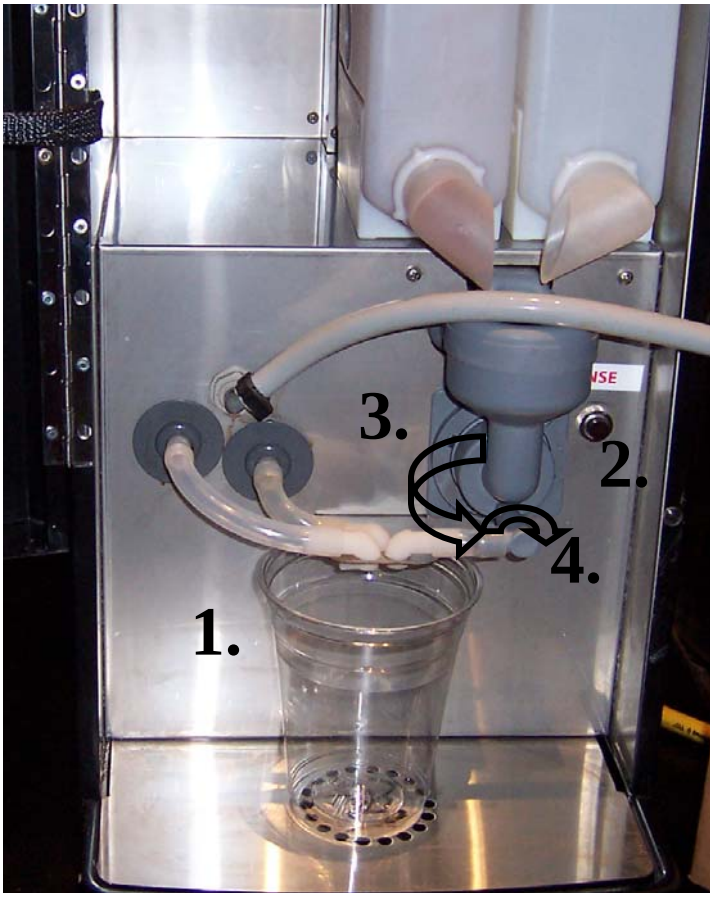

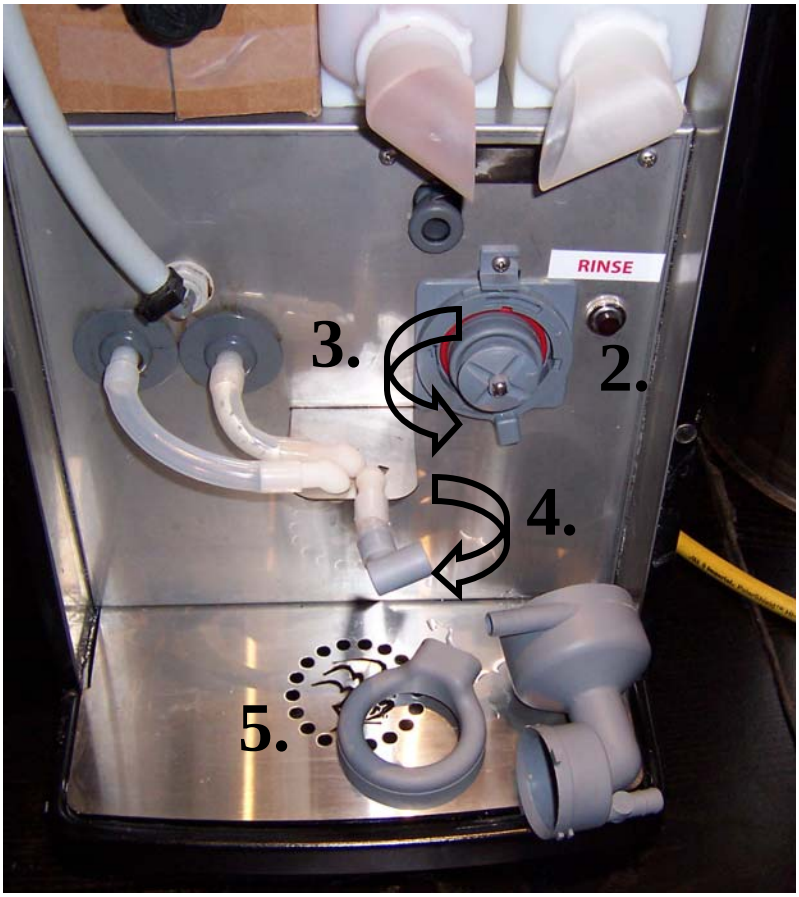

Whipper Disassembly

1	767376 WHIPPER STEAM CAP
2	767195 WHIPPER MOTOR
3	767196 BASE, WHIPPER MOUNTING [O-Ring & Shaft Seal Included]
4	767197 WHIPPER IMPELLER
5	767365 WHIPPER BOWL
6	767200 WHIPPER NOZZLE
7	781566 WHIPPER SEAL *(REPLACE AFTER 5000 CYCLES)*
8	767390 O-RING WHIPPER BASE RED [NOT SHOWN]

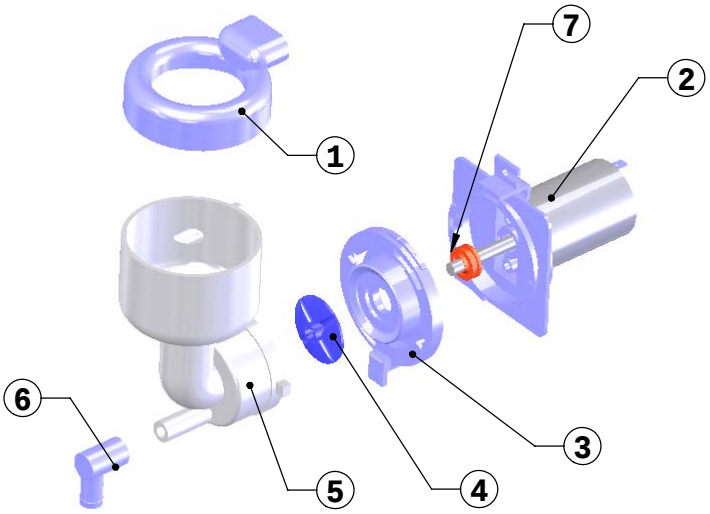

Cleaning Instructions

Fig. 1

Fig. 2

1. Remove product from storage area and disconnect BIB connectors as shown in **figures 1 & 2**.

Cleaning Instructions-Cont'd

Fig. 3

2. Place an empty container in the dispense area of the machine as shown in **figure 3**. *NOTE: MODEL B-10 SHOWN-MODEL B-10 T HAS 2 PRODUCTS & BIB CONNECTORS.

Cleaning Instructions-Cont'd

3. Connect the flushing solution to the BIB connector from the pump as shown in **figure 4**

Fig. 4

Flush Product & Type of Fittings:

900044: Easy Clean Flush Solution

900044: Easy Clean Flush Solution removed from the box.

400137: QCD Fitting

107117: Scholle Fitting

Daily Cleaning Instructions

1. Remove the product BIBS from the machine and connect a BIB of cleaning solution to Pump 1 BIB connector as shown in figures 1 – 4 pages 22-24.

2. Enter "Programming Mode" by pressing & holding the "Decaf" button.

3. Press the "Coffee Mild" button on the display panel to enter "Maintenance" mode.

4. Display will change to "Install Sanitizing Solution" – "Press Decaf to Start Cleaning Cycle". *Note:* This function is used for both weekly cleaning/ sanitizing & daily cleaning.

5. Place an empty 12 oz. cup in the dispense area then press the decaf button to start the cleaning cycle. Cycle will start and finish automatically.

6. When cleaning cycle ends [2.5 minutes total: pump 45 sec., dwell 90 sec., & water 15 sec.], the buzzer alarm will sound 3 times if enabled during the "Set-Up Programming".

7. When cleaning cycle ends, disconnect the BIB of cleaning solution from the Pump BIB connector and replace the coffee BIB product. The machine will automatically advance to the "Prime Pump" mode.

8. *To Prime:* Press and hold the "Decaf" button until a steady stream of products flows from the dispense area into the vessel.

9. Press "Latte" [upper right] button to advance to Pump 2. Change cleaning solution to Pump 2 and repeat steps 3 – 8 to clean Pump 2.

10. Press and release the "Latte" button until "Exit Maintenance" mode appears on the display – press "Coffee Mild" button to exit.

11. Press and release the "Latte" button until "Exit Programming" mode appears on the display – press "Coffee Mild" button to exit and return to normal "Run" mode.

12. Discard the contents of the 12 oz. cup. *Note:* The cleaning solution comes with two 1/2 gallon packs in a case (900044) or a single 1/2 gallon pack (900042). Name of the product is "Easy-Clean."

Weekly Cleaning Instructions

1. Following daily cleaning instructions above page 25

2. Remove the bag connector from the product box and disassemble or prop open the internal valve to allow free flow of product through the connector. ***Note:*** **Cutting the mating fitting from an empty bag makes an excellent "free flowing" connector for this purpose.**

3. Place the bag connector into a one gallon [3.8 liter] container of warm soapy tap water 140°F [60°C].

4. Place an empty container under dispense tip and activate the corresponding button until the clean soapy water is dispensed from the dispense tip.

5. Repeat steps 2 and 3 with warm tap water 140°F [60°C] to rinse the soapy water from the pump tubing. Continue dispensing until the water is clear, and no soapy water is being dispensed.

6. Prepare 1 gallon [3.8 liter] of sanitizing solution by dissolving 1 tablespoon of household bleach into 1 gallon [3.8 liter] of 120°F [48.9°C] water to ensure 200 ppm of available chlorine.

7. Place the coffee connector in the sanitizing solution. Again, repeat steps 2 and 3 with the sanitizing solution, ensuring that the bag connector remains covered in sanitizer. Once sanitizing solution is being dispensed, stop dispensing and allow the solution to sit for 5 minutes.

8. Repeat step 4 to flush out the sanitizing solution from the pump tubing.

9. Remove the mating connector from the bag connector.

10. Reattach the bag connector to product BIB.

11. Activate the "Coffee Mild" button until coffee appears. Then dispense two [2] 8 ounce cups of coffee and discard.

12. Remove whipper components [figure 6].

Weekly Cleaning Instructions-Cont'd

13. Soak whipper components in remaining unused sanitizer for 5 minutes, then rinse thoroughly and let air dry before reinstalling.

For Your Information: **If the "Easy-Clean" product is not being used or need to sanitize. These adaptors open the appropriate connector and then the hose ends can be dropped into your solution of cleaner or sanitizer. PN: 320282, QCD cleaning/flush adapter. PN: 120508, Scholle cleaning/flush adapter. A cleaning adapter can be made by taking an empty BIB bag & cutting away as much of the empty bag possible. Wash the remaining connector & further trim off any excess bag pieces if desired. This is now your cleaning adapter. It will allow the check valve in the connector to stay open during the cleaning process. Cleaning adapters may be saved for later use.**

Whipper System Maintenance

Cleaning

The normal cleaning procedure for the whipper system is to remove and rinse all of the plastic parts with warm running water.

However, a more thorough maintenance is recommended on a quarterly basis and for higher volume accounts. The following are a few things you should be aware of and pay special attention to when working with whipper system.

Preventative Maintenance

Rinse Cycle [Daily]

It is extremely important to train the caretaker to perform a *"Powder Rinse"* cycle after refilling the powder dispensers. When the dispensers are put back into position after being refilled, powdered milk and chocolate may spill into the whipper bowl. To prevent a backup in the whipper system, this powder must be flushed from the system prior to placing the machine back into service.

1. **Open the front door of the machine, and place a container under the dispensing spout[s].**
2. **Press the *"Rinse"* button on the panel inside the front door.**
3. **Press the *"Rinse"* button until the water runs clear into the container.**

Whipper System Maintenance-Cont'd

Lubrication

As the whipper motor spins at a very high rate of speed, it is important to minimize friction between the motor shaft and the rubber seal to extend the life of both components. After disassembling and cleaning the whipper components with warmer water, add lubricant [item #: 900039] to the whipper motor shaft before re-installing the base. The lubricant should be applied approximately on the center shaft [where the seal will sit]. Do not apply lubricant to the complete shaft as this is not required.

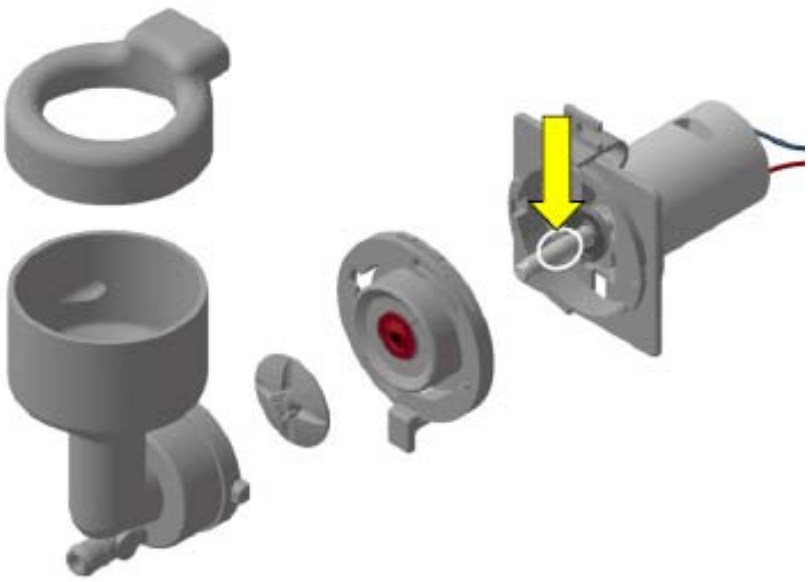

Replacing Worn Components

The whipper system is equipped with a drainage system in case liquid gets past the seal and behind the base. Should this occur liquid will drip from the handle area as an indication that the seal is worn. At this point, the whipper system must be taken apart, cleaned, and the worn seal must be replaced

Whipper System Maintenance-Cont'd

Replacing Worn Components – Cont'd

When replacing the seal [781566] on the whipper base, pay careful attention to the alignment marks on both the seal and the base. If the two are not properly aligned, the hole in the seal [for the motor shaft] will be oval shaped and not round. This will allow liquid to get past the seal and possibly into the whipper motor.

After replacing the seal, inspect the larger rubber O-ring [767390] in the base for cuts, nicks, and deformities. If the O-ring appears damaged in any way, it should be replaced.

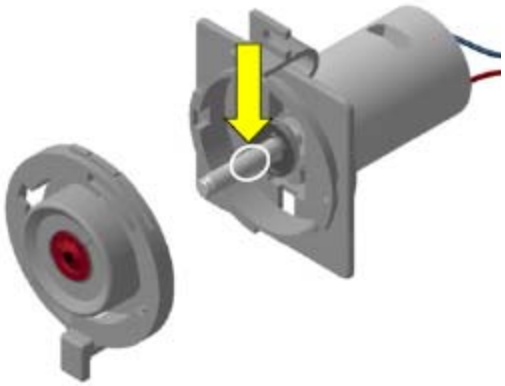

After servicing the whipper, add some Lubrifilm lubricant to the whipper motor shaft prior to re-installing the base onto the motor.

Whipper System Maintenance-Cont'd

Replacing Worn Components-Cont'd

Pay extra attention when installing the impeller onto the whipper motor shaft. The impeller has an indicator arrow that must be aligned with the flat spot on the shaft for proper installation. If the impeller is forced onto the shaft without properly aligning it, it will become extremely difficult to remove the next time maintenance is required.

When installing the impeller onto the shaft, make certain that it clicks into position (figure2). If the impeller is not pushed in far enough (figure 1), it will rub on the whipper chamber and eventually seize. If it is installed too far on the shaft (figure 3), it may rub on the whipper base and eventually seize. In both cases, the product will not mix properly and may cause a blockage in the powder system outlet hose.

Figure 1

Figure 2

Figure 3

Service Notes

This machine uses advanced diagnostics to alert the operator should any of the motors or motor controllers sense the motors are not turning at the correct rate or sense a bad connection. These errors highlighted by a scrolling display such as "Call for Service—(Left Auger) Motor Error", and the Service Number entered during machine set-up will be displayed. These Motor error messages include Flipper Motor, Left and Right Auger Motors, Hot Water Bypass Pump, Water Pump (for powder mix), Whipper Motor, and Air Pump.

Usually repairing a bad connection or replacing the indicated motor or pump will remedy the problem.

Display Reads	Possible Cause(s)	Remedies	Notes
Fill Timeout	Water shut off to Machine	Check Water Supply Shutoff	Initial fill time longer than 8 minutes
	Supply Line Blocked or too small	Repair or Replace as needed	Fill time Longer than 1 Minute
	Water Filter Restricted	Replace-Service Req'd	Water Probe has a 30 second Hysteresis cycle
	Inlet Solenoid valve Faulty	Replace-Service Req'd	
	Control Board Failure	Replace-Service Req'd	
Thermistor Error	Thermistor not plugged in	Make sure plug in housing is latched	Open or Shorted Thermistor
	Faulty Thermistor	Replacement	
	Control Board Failure	Replace-Service Req'd	
Heater Timeout	Faulty Thermistor	Replacement	4 Minute Continuous Heater Run
	Faulty Heater Element	Replace-Service Req'd	
	Control Board Failure	Replace-Service Req'd	
Motor Error	Faulty wire connection	Check connector/harness	Auger Motors 24 v dc
	Control Board Failure	Replace-Service Req'd	Water pump 12 v dc
			Whipper motor 24 v dc

DRAINING THE HOT WATER TANK

THE DRAIN TUBE IS CLIPPED TO THE TANK PLATE IN FRONT OF THE TANK. TANK HOLDS APPROX 1 US GALLON.

THE HOT WATER TANK CAN BE DRAINED FROM THE REAR OF THE MACHINE –UNPLUG MACHINE FROM POWER SOURCE. CAUTION-UNLESS THE TANK IS LEFT TO COOL THE WATER IS EXTREMELY HOT AND CAN CAUSE HARMFUL BURNS. REPLACE DRAIN PLUG, ENSURE HOSE CLAMP IS TIGHT AND REPOSITION DRAIN HOSE BEFORE RE-FILLING THE HOT WATER TANK.
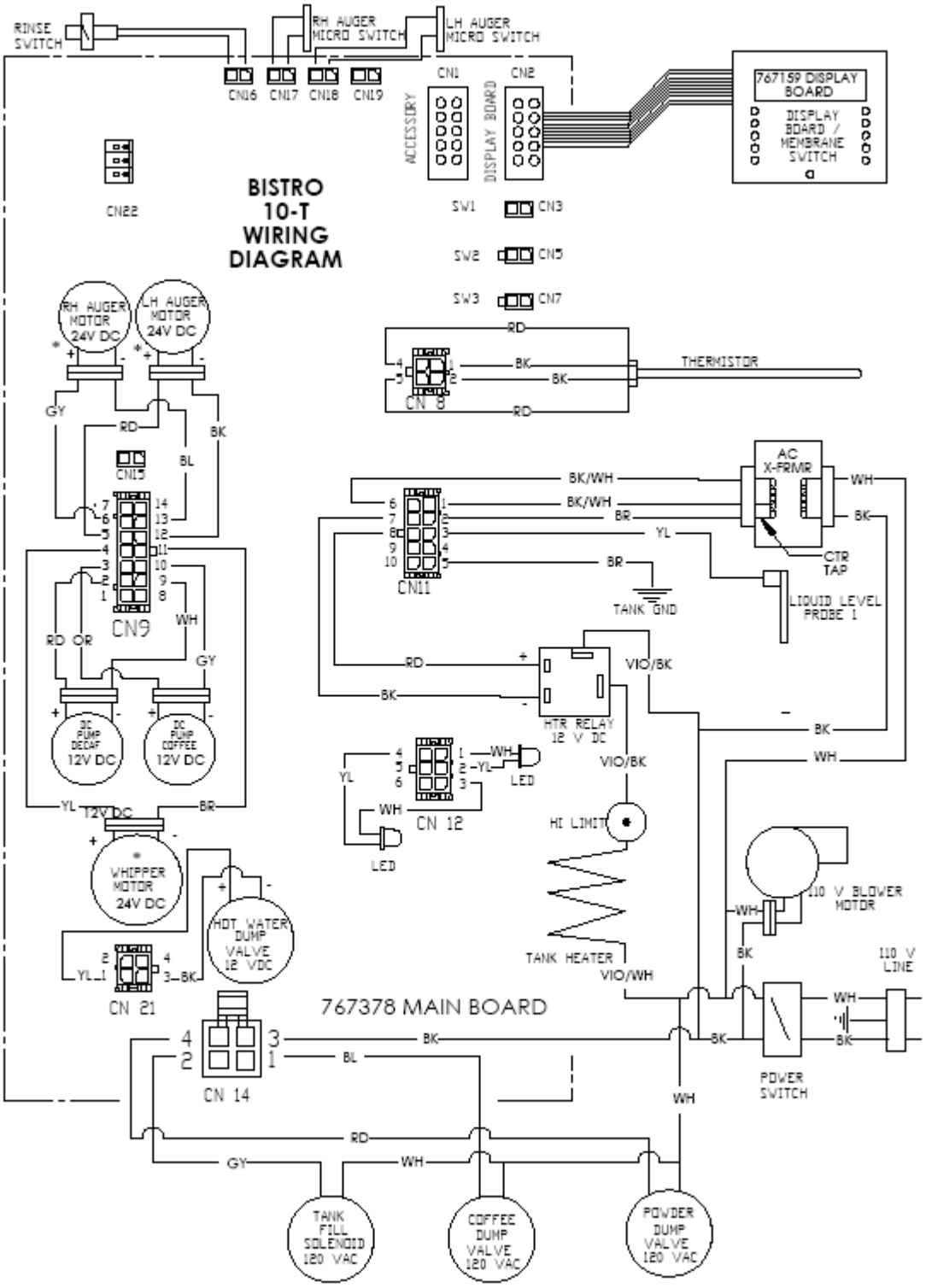
Wiring Diagram