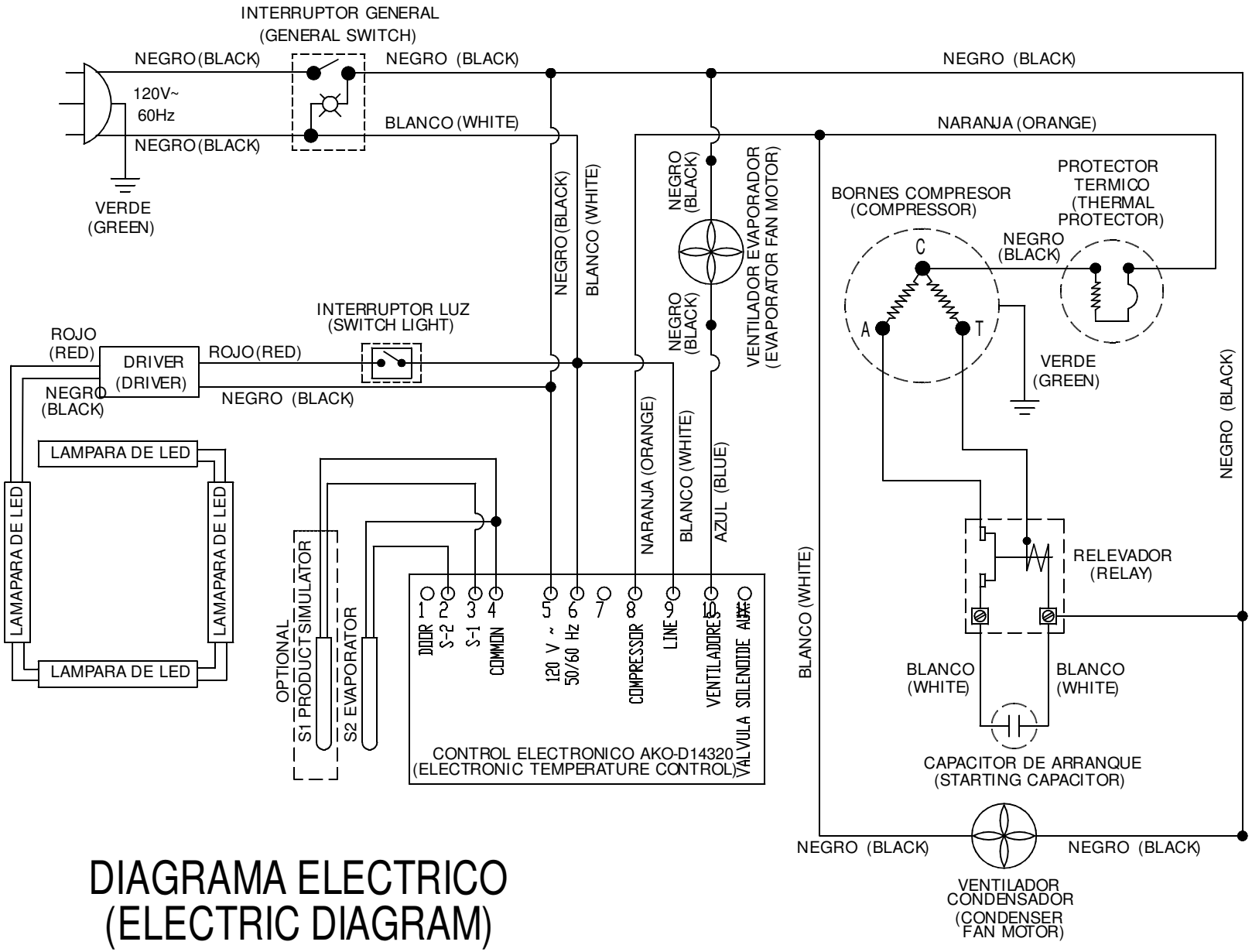

DIAGRAMA ELECTRICO
(ELECTRIC DIAGRAM)
CTRH-4